Variable Speed Air Conditioners and Heat Pumps Using Puron Advance™ (R-454B) Refrigerant

Service Manual

Table of contents

PAGE NO.

UNIT IDENTIFICATION 3
SAFETY CONSIDERATIONS 3
General information 3
ELECTRICAL 4
Aluminum Wire 4
ELECTRICAL SYSTEM OVERVIEW 4
Terminal Block 4
Transformer 4
Compressor / Fan Sub-System 4
Variable Frequency Drive (VFD) 8
VFD Filter Board (191VAN/290VAN/293VAN Only) 8
Reactors (191VAN/290VAN/291VAN/293VAN Only) 8
High Pressure Switch (HPS) 8
Compressor Brushless Permanent Magnet Motor (COMP) 8
VFD + Compressor RPM 8
Fan Brushless Permanent Magnet Motor (OFM) 8
VFD + Fan Motor RPM 8
Internal Stator Heating 8
Control Sub-system 8
Primary Control Module (PCM) 8
Control Connection
(Communicating and Non-Communicating)
191VAN/290VAN/291VAN/293VAN Only 9
Communicating Evolution System Control
(191VAN/290VAN/291VAN/293VAN 9
Non-Communicating Control
(191VAN/290VAN/291VAN/293VAN Only) 9
Table 1 – DIP Switch Settings 10
Control Connections
(249VAN Models) 10
PCM Indicators and Matrix Display 10
Model Plug / Configuration 13
Thermistors 13
Pressure Sensors 13
VFD Control Connection
(191VAN and 290VAN,291VAN,293VAN Models Only) 13
Pressure Equalization Valve (PEV)
191VAN and 290VAN,291VAN,293VAN Models Only 13
Reversing Valve (RVS) 13
Heating Electronic Expansion Valve (EXV-H) 13
Accessory Control Components Utility Curtailment
191VAN and 290VAN,291VAN,293VAN Models Only 13
Liquid Line Solenoid Valve (LLS)
191VAN Only 13
CONTROL FEATURES AND OPERATION 14
Equipment Configuration (Model Plug) 14
Performance Mode 14
Compressor Operation 14
Compressor Protect Delay 14
Starting 14
Running 14
Compressor Reliability Protection 14
Sump Heat 14
Fan Operation 14
Intermittent Low Fan Speed 14
Fan Operating Exceptions 14
Cooling Control 14
Heating Control 14
Super Heat Control 14
Defrost Mode 14
Defrost Interval 15
Defrost Process 15
PCM Indicators and Display Operation 15
Status Light 15
PCM Comm Light
(191VAN and 290VAN,291VAN,293VAN Models) 15
PCM Comm Light (249VAN Models) 15
VFD Comm Light
(191VAN and 290VAN,291VAN,293VAN Models Only) . . . 15
Matrix Display 15
Re-programmability
(191VAN and 290VAN,291VAN,293VAN Models Only) . . . 16
Re-programmability
(249VAN Models Only) 16
VFD LEDs 17
Table 2 – VFD LED Functions - 191VAN &
290VAN,291VAN,293VAN 17
VFD LEDs (249VAN Models) 17
Charge Mode 18
191VAN, 290VAN, 291VAN, 293VAN Models 18
Table 3 – Environment Type Guideline 18
249VAN Models 18
Refrigerant Charging Modes - Switch 1 19
TROUBLESHOOTING 20
TROUBLESHOOTING CONTROL FEATURES 20
SYSTEM DIAGNOSTICS 20
Equipment Configuration (Model Plug) 21
Table 4 – Model Plug Information 21
High Pressure Switch Protection 22
High Pressure Protection 22
Low Pressure Protection 22
COMPONENT DIAGNOSTICS 22
Table 5 – Variable Speed Compressor Resistances (ohm)
(winding resistance at 68°F /20°C) 22
Fan 22
Table 6 – DC Voltage and PWM Measurement 23
Temperature Thermistors 23
Table 7 – 10K Thermistor Resistance Values 23
Table 8 – 50K Thermistor Resistance Values 23
Outdoor Air Temperature (OAT) 23
Outdoor Coil Temperature (OCT) 23
Liquid Line Temperature (LLT) 24

Outdoor Suction Temperature (OST) 24
Outdoor Discharge Line Temperature (ODT) 24
Failed Thermistor Default Operation 24
Table 9 – Thermistor Resistance (k-ohms) vs. Temperature 24
Pressure Sensors 24
Electronic Expansion Valves (EXV) 25
DIAGNOSTIC CODES AND TROUBLESHOOTING 26
Table 10 – 191VAN/290VAN/291VAN/293VAN Fault Code Table 37
Table 11 – 249VAN Fault Code Table 39
REFRIGERATION SYSTEM 50
Refrigerant 50
Compressor Oil 50
Servicing Systems on Roofs With Synthetic Materials 50
Synthetic Roof Precautionary Procedure 50
Brazing 50
Aluminum Brazing 50
Service Valves and Pump Down 51
Evacuation and Recovery of Refrigerant from within 54
Refrigerant Charging Mode 54
Pump Down (PUMP) & Evacuation (EVAC) 54
Evacuation and Recovery of Refrigerant (EVAC) 54
Reversing Valve 55
Liquid Line Filter Drier 55
Install Liquid-Line Filter Drier - Indoor 56
Suction Line Filter Drier 56
Thermostatic Expansion Valve (TXV) 56
TXV Operation 56
Accumulator 56
Vapor Injection Operation (on select models) 57
REFRIGERATION SYSTEM REPAIR 58
Leak Detection 58
Coil Removal 59
Aluminum Coil Removal 59
Compressor Removal and Replacement 60
System Clean-Up After Burnout 60
Evacuation 61
Deep Vacuum Method 61
Triple Evacuation Method 61
Calculating Superheat and Subcooling with Puron Advance™ (R-454B) Refrigerant 62
Table 12 – Puron Advance™ (R-454B) Temperature and Pressure Chart 63

UNIT IDENTIFICATION

The unit is identified using a 16 digit model number structure. It is recommended providing the complete 16 digit model number when ordering replacement parts to insure receiving the correct parts.

Model Number Nomenclature

1	2	3	4	5	6	7	8	9	10	11	12	13	14	15	16
1	**9**	**1**	**V**	**A**	**N**	**0**	**3**	**6**	**0**	**0**	**A**	**A**	**A**	**A**	**A**
Product Family	R-454B Refrigerant & Tier	SEER2	OD Design Type	Major Series	Voltage	Open	Cooling Capacity		Feature	Special Feature	Region	Minor Series	Coil Tube Material	Compressor	Open
1 = AC **2** = HP	**4**=Preferred **9**=Evolution	0=20 1=21 3=23 9=19	**V**=Variable Speed	**A-Z** = Major Interation	**N** = 208-230-1 or 208/230-1 **P** = 208-230-3 or 208/230-3 **E** = 460-3		Increments of 1,000 Nominal Btuh		**0**=Std **C**=Coastal	0=Std	**A**=Std HP **W**=Std SW AC	**A-Z** = Minor Series	**A**=Aluminum **B**=Copper	**A**=Scroll **B**=Rotary **C**=Alt Qual Scroll	**0**=Not Defined

SERIAL NUMBER NOMENCLATURE

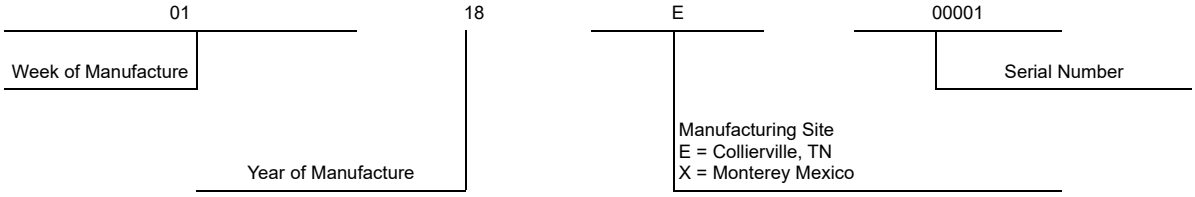

SAFETY CONSIDERATIONS

Installation, service, and repair of these units should be attempted only by trained service technicians familiar with standard service instruction and training material.

All equipment should be installed in accordance with accepted practices and unit Installation Instructions, and in compliance with all national and local codes. Power should be turned off when servicing or repairing electrical components. Extreme caution should be observed when troubleshooting electrical components with power on. Observe all warning notices posted on equipment and in instructions or manuals.

⚠ WARNING

ELECTRICAL SHOCK HAZARD

Failure to follow this warning could result in personal injury or death.

Before installing, modifying, or servicing system, main electrical disconnect switch must be in the OFF position. There may be more than 1 disconnect switch. Lock out and tag switch with a suitable warning label.

⚠ WARNING

ELECTRICAL HAZARD - HIGH VOLTAGE!

Failure to follow this warning could result in personal injury or death.

Electrical components may hold charge. DO NOT remove control box cover for 2 minutes after power has been removed from unit.

PRIOR TO TOUCHING ELECTRICAL COMPONENTS:

Verify less than zero (0) vdc voltage at VFD connections shown on cover.

⚠ CAUTION

CUT HAZARD

Failure to follow this caution may result in personal injury.

Sheet metal parts may have sharp edges or burrs. Use care and wear appropriate protective clothing and gloves when handling parts.

⚠ WARNING

UNIT OPERATION AND SAFETY HAZARD

Failure to follow this warning could result in personal injury or equipment damage.

Puron Advance™ (R-454B) systems operate at different conditions than Puron (R-410A) and R-22 systems. Do not use R-410A or R-22 service equipment or components on Puron Advance™ (R-454B) equipment. Ensure service equipment is rated for Puron Advance™ (R-454B) refrigerant.

Refrigeration systems contain refrigerant under pressure. Extreme caution should be observed when handling refrigerants. Wear safety glasses and gloves to prevent personal injury. During normal system operations, some components are hot and can cause burns. Rotating fan blades can cause personal injury. Appropriate safety considerations are posted throughout this manual where potentially dangerous techniques are addressed.

If you do not understand any of the warnings, contact your product distributor for better interpretation of the warnings.

General information

Puron Advance™ (R-454B) heat pumps and air conditioners feature the latest variable speed technology. The heart of the system is a high-side rotary or scroll variable speed compressor powered by a variable frequency drive (VFD) control. By combining the Primary Control Module (PCM), an ECM outdoor fan motor, VFD, variable speed compressor, and the Evolution Extreme outdoor cabinet; Puron Advance () variable speed heat pumps and air conditioners achieve our highest Seasonal Energy Efficiency Ratio* (SEER2) and Heating Performance Factor* (HSPF2).

To ensure all of the above technology provides the ultimate in comfort, 191VAN and 290VAN/291VAN/293VAN models are combined with either an air handler or variable speed gas furnace controlled with a two wire communication Evolution System Control and 249VAN models are installed with two-stage furnace or air handler and controlled with a traditional two-stage thermostat.

ELECTRICAL

⚠ WARNING

ELECTRICAL SHOCK HAZARD

Failure to follow this warning could result in personal injury or death.

Exercise extreme caution when working on any electrical components. Shut off all power to system prior to troubleshooting. Some troubleshooting techniques require power to remain on. In these instances, exercise extreme caution to avoid danger of electrical shock. ONLY TRAINED SERVICE PERSONNEL SHOULD PERFORM ELECTRICAL TROUBLESHOOTING.

Aluminum Wire

⚠ CAUTION

UNIT OPERATION AND SAFETY HAZARD

Failure to follow this caution may result in equipment damage or improper operation.

Aluminum wire may be used in the branch circuit (such as the circuit between the main and unit disconnect), but only copper wire may be used between the unit disconnect and the unit.

Whenever aluminum wire is used in branch circuit wiring with this unit, adhere to the following recommendations.

Connections must be made in accordance with the National Electrical Code (NEC), using connectors approved for aluminum wire. The connectors must be UL approved (marked Al/Cu with the UL symbol) for the application and wire size. The wire size selected must have a current capacity not less than that of the copper wire specified, and must not create a voltage drop between service panel and unit in excess of 2 of unit rated voltage. To prepare wire before installing connector, all aluminum wire must be “brush-scratched” and coated with a corrosion inhibitor such as Pentrox A. When it is suspected that connection will be exposed to moisture, it is very important to cover entire connection completely to prevent an electrochemical action that will cause connection to fail very quickly. Do not reduce effective size of wire, such as cutting off strands so that wire will fit a connector. Proper size connectors should be used. Check all factory and field electrical connections for tightness. This should also be done after unit has reached operating temperatures, especially if aluminum conductors are used.

ELECTRICAL SYSTEM OVERVIEW

The electrical system consists of four main primary components and sub-systems as listed below and shown in Fig. 1

- Terminal Block
- Transformer
- Compressor and Fan Sub-System
- Control Sub-System

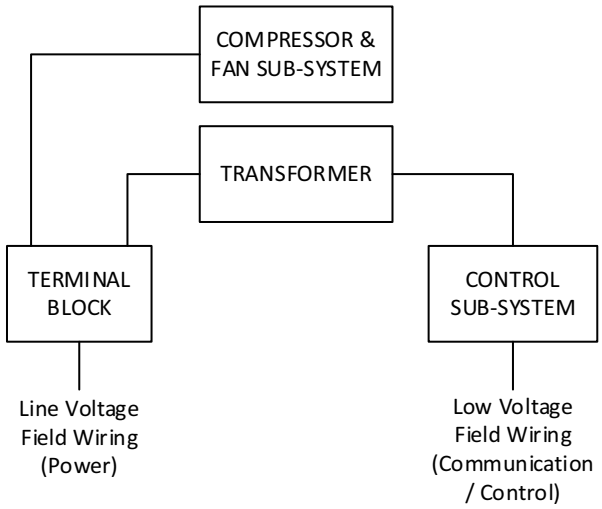

A200232

Fig. 1 – ELECTRICAL SYSTEM OVERVIEW

Terminal Block

The terminal block provides the connection point for high voltage field power wiring

Transformer

⚠ CAUTION

Equipment Damage Hazard

Failure to follow this caution may result in equipment damage or improper operation.

Do not connect the equipment 24VAC supply (Rc) to the indoor equipment 24VAC supply (Rh).

IMPORTANT: The 24VAC power (Rc) in the PCM comes from the transformer in the equipment. The phase of this transformer connection is not controlled relative to the phase of the power provided by the transformer in the indoor equipment (Rh). Wiring requirements in this manual do not connect Rc and Rh together. For any non-standard wiring, care should be taken to make sure that Rc and Rh are not connected together. Doing so may result in destroying one or both of the transformers in this and the indoor equipment.

The transformer converts line voltage power to low voltage power required by the control system. The transformer also provides isolation between the line voltage and low voltage systems.

Compressor / Fan Sub-System

The compressor / fan subsystem consists of the following components:

- Variable speed compressor
- Variable speed fan
- Variable Frequency Drive (VFD) sub-system for driving the compressor and fan

The VFD sub-system consists of several components that are shown conceptually in Fig. 2 with detailed wiring shown in Fig. 3. The function of each component is described in further detail in the following section.

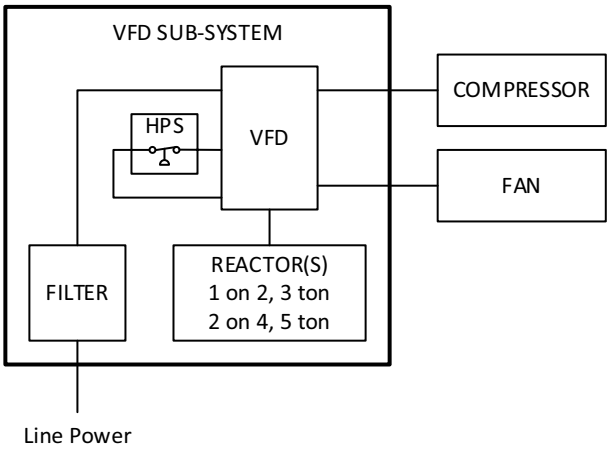

Fig. 2 – Compressor / Fan Sub-System Diagram

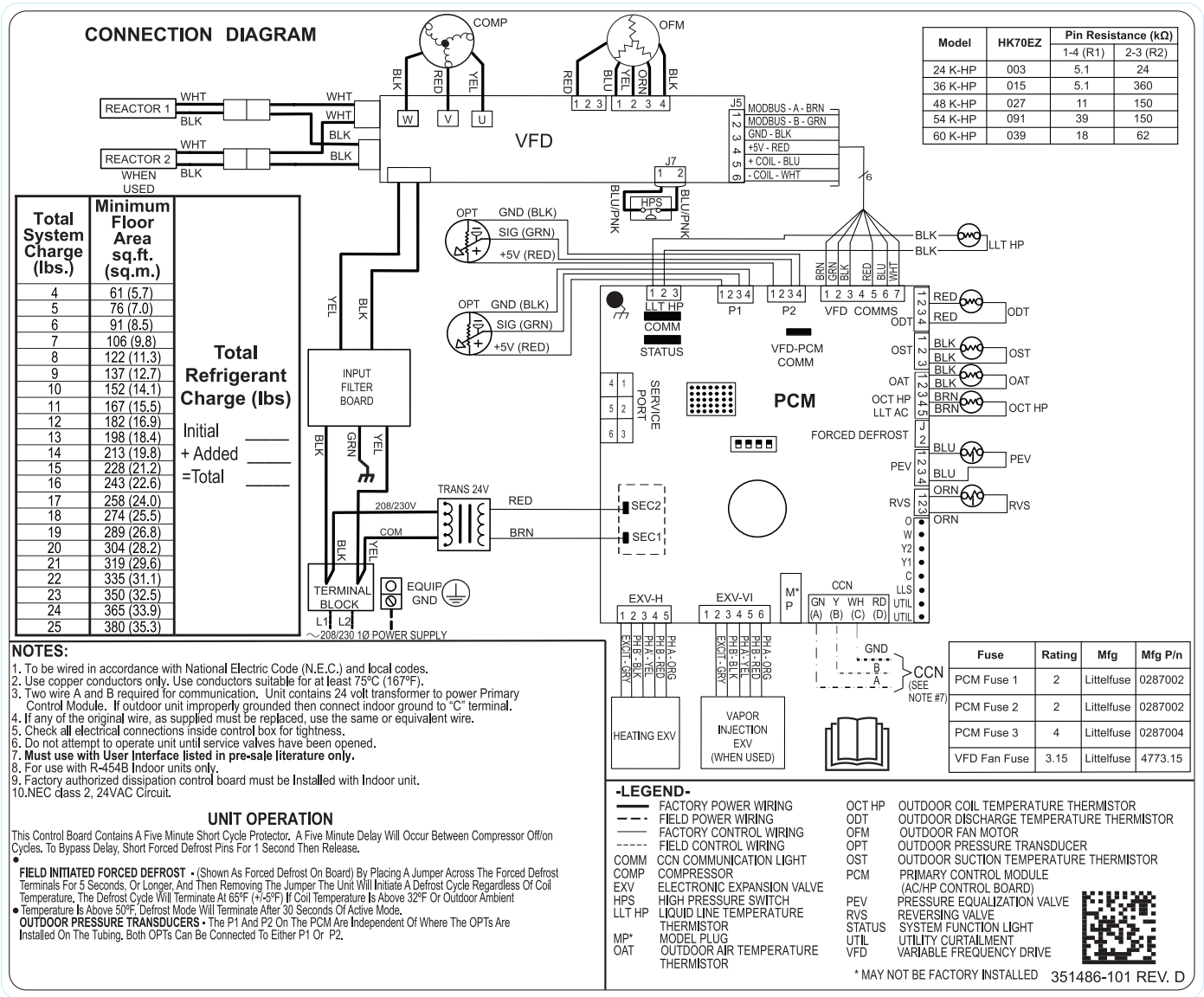

Total System Charge (lbs.)	Minimum Floor Area sq.ft. (sq.m.)
4	61 (5.7)
5	76 (7.0)
6	91 (8.5)
7	106 (9.8)
8	122 (11.3)
9	137 (12.7)
10	152 (14.1)
11	167 (15.5)
12	182 (16.9)
13	198 (18.4)
14	213 (19.8)
15	228 (21.2)
16	243 (22.6)
17	258 (24.0)
18	274 (25.5)
19	289 (26.8)
20	304 (28.2)
21	319 (29.6)
22	335 (31.1)
23	350 (32.5)
24	365 (33.9)
25	380 (35.3)

Total Refrigerant Charge (lbs)

Initial _____
+ Added _____
=Total _____

Model	HK70EZ	Pin Resistance (kΩ)	
		1-4 (R1)	2-3 (R2)
24 K-HP	003	5.1	24
36 K-HP	015	5.1	360
48 K-HP	027	11	150
54 K-HP	091	39	150
60 K-HP	039	18	62

Fuse	Rating	Mfg	Mfg P/n
PCM Fuse 1	2	Littelfuse	0287002
PCM Fuse 2	2	Littelfuse	0287002
PCM Fuse 3	4	Littelfuse	0287004
VFD Fan Fuse	3.15	Littelfuse	4773.15

Fig. 3 – HP Wiring Diagram — 208-230-1 (290VAN, 291VAN, 293VAN Models)

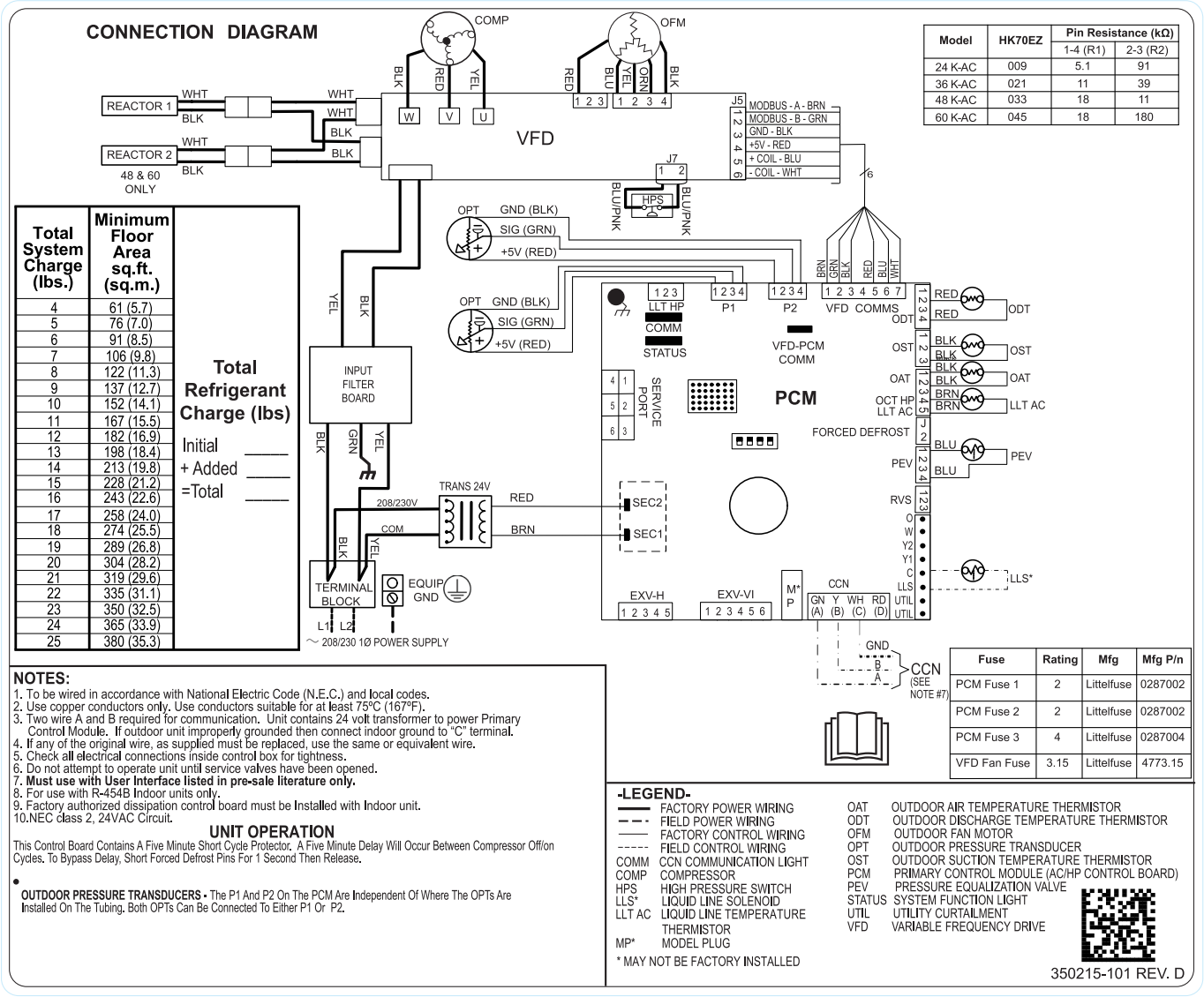

Model	HK70EZ	Pin Resistance (kΩ)	
		1-4 (R1)	2-3 (R2)
24 K-AC	009	5.1	91
36 K-AC	021	11	39
48 K-AC	033	18	11
60 K-AC	045	18	180

Total System Charge (lbs.)	Minimum Floor Area sq.ft. (sq.m.)
4	61 (5.7)
5	76 (7.0)
6	91 (8.5)
7	106 (9.8)
8	122 (11.3)
9	137 (12.7)
10	152 (14.1)
11	167 (15.5)
12	182 (16.9)
13	198 (18.4)
14	213 (19.8)
15	228 (21.2)
16	243 (22.6)
17	258 (24.0)
18	274 (25.5)
19	289 (26.8)
20	304 (28.2)
21	319 (29.6)
22	335 (31.1)
23	350 (32.5)
24	365 (33.9)
25	380 (35.3)

Total Refrigerant Charge (lbs)

Initial _____
+ Added _____
=Total _____

Fuse	Rating	Mfg	Mfg P/n
PCM Fuse 1	2	Littelfuse	0287002
PCM Fuse 2	2	Littelfuse	0287002
PCM Fuse 3	4	Littelfuse	0287004
VFD Fan Fuse	3.15	Littelfuse	4773.15

NOTES:

1. To be wired in accordance with National Electric Code (N.E.C.) and local codes.
2. Use copper conductors only. Use conductors suitable for at least 75ºC (167ºF).
3. Two wire A and B required for communication. Unit contains 24 volt transformer to power Primary Control Module. If outdoor unit improperly grounded then connect indoor ground to "C" terminal.
4. If any of the original wire, as supplied must be replaced, use the same or equivalent wire.
5. Check all electrical connections inside control box for tightness.
6. Do not attempt to operate unit until service valves have been opened.
7. **Must use with User Interface listed in pre-sale literature only.**
8. For use with R-454B Indoor units only.
9. Factory authorized dissipation control board must be Installed with Indoor unit.
10. NEC class 2, 24VAC Circuit.

UNIT OPERATION

This Control Board Contains A Five Minute Short Cycle Protector. A Five Minute Delay Will Occur Between Compressor Off/on Cycles. To Bypass Delay, Short Forced Defrost Pins For 1 Second Then Release.

- **OUTDOOR PRESSURE TRANSDUCERS** - The P1 And P2 On The PCM Are Independent Of Where The OPTs Are Installed On The Tubing. Both OPTs Can Be Connected To Either P1 Or P2.

-LEGEND-

———	FACTORY POWER WIRING
- - -	FIELD POWER WIRING
———	FACTORY CONTROL WIRING
- - - -	FIELD CONTROL WIRING
COMM	CCN COMMUNICATION LIGHT
COMP	COMPRESSOR
HPS	HIGH PRESSURE SWITCH
LLS*	LIQUID LINE SOLENOID
LLT AC	LIQUID LINE TEMPERATURE THERMISTOR
MP*	MODEL PLUG
OAT	OUTDOOR AIR TEMPERATURE THERMISTOR
ODT	OUTDOOR DISCHARGE TEMPERATURE THERMISTOR
OFM	OUTDOOR FAN MOTOR
OPT	OUTDOOR PRESSURE TRANSDUCER
OST	OUTDOOR SUCTION TEMPERATURE THERMISTOR
PCM	PRIMARY CONTROL MODULE (AC/HP CONTROL BOARD)
PEV	PRESSURE EQUALIZATION VALVE
STATUS	SYSTEM FUNCTION LIGHT
UTIL	UTILITY CURTAILMENT
VFD	VARIABLE FREQUENCY DRIVE

* MAY NOT BE FACTORY INSTALLED

350215-101 REV. D

Fig. 4 – AC Wiring Diagram — 208-230-1 (191VAN Models)

CONNECTION DIAGRAM

Total System Charge (lbs.)	Minimum Floor Area sq.ft. (sq.m.)
4	61 (5.7)
5	76 (7.0)
6	91 (8.5)
7	106 (9.8)
8	122 (11.3)
9	137 (12.7)
10	152 (14.1)
11	167 (15.5)
12	182 (16.9)
13	198 (18.4)
14	213 (19.8)
15	228 (21.2)
16	243 (22.6)
17	258 (24.0)
18	274 (25.5)
19	289 (26.8)
20	304 (28.2)
21	319 (29.6)
22	335 (31.1)
23	350 (32.5)
24	365 (33.9)
25	380 (35.3)

Total Refrigerant Charge (lbs)

Initial _____
+ Added _____
=Total _____

Fuse	Rating	Mfg	Mfg P/n
PCM Fuse 1	2	Littelfuse	0287002
PCM Fuse 2	2	Littelfuse	0287002
PCM Fuse 3	4	Littelfuse	0287004
VFD Fan Fuse	3.15	Hollyland	5HF-032H

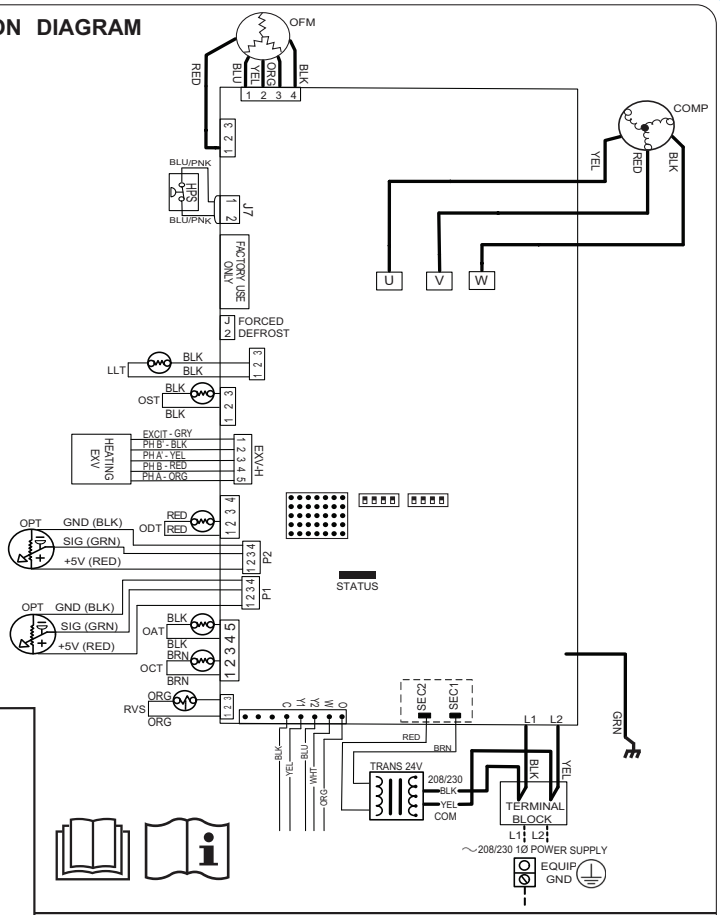

NOTES:

1. To be wired in accordance with National Electric Code (N.E.C.) and local codes.
2. Use copper conductors only. Use conductors suitable for at least 75°C (167°F).
3. Unit contains 24 volt transformer to power Primary Control Module.
   If outdoor unit improperly grounded then connect indoor ground to "C" terminal.
4. If any of the original wire, as supplied must be replaced, use the same or equivalent wire.
5. Check all electrical connections inside control box for tightness.
6. Do not attempt to operate unit until service valves have been opened.
7. For use with R-454B Indoor units only.
8. Factory authorized dissipation control board must be Installed with Indoor unit.
9. NEC class 2, 24VAC Circuit

UNIT OPERATION

This Control Board Contains A Five Minute Short Cycle Protector. A Five Minute Delay Will Occur Between Compressor Off/on Cycles. To Bypass Delay, Short Forced Defrost Pins For 1 Second Then Release.

- **FIELD INITIATED FORCED DEFROST -** (Shown As Forced Defrost On Board) By Placing A Jumper Across The Forced Defrost Terminals For 5 Seconds, Or Longer, And Then Removing The Jumper The Unit Will Initiate A Defrost Cycle Regardless Of Coil Temperature. The Defrost Cycle Will Terminate At 65°F (+/-5°F) If Coil Temperature Is Above 32°F
- Or Outdoor Ambient Temperature Is Above 50°F, Defrost Mode Will Terminate After 30 Seconds Of Active Mode.

OUTDOOR PRESSURE TRANSDUCERS - The P1 And P2 On The PCM Are Independent Of Where The OPTs Are Installed On The Tubing. Both OPTs Can Be Connected To Either P1 Or P2.

-LEGEND-

———	FACTORY POWER WIRING
- - -	FIELD POWER WIRING
———	FACTORY CONTROL WIRING
- - - -	FIELD CONTROL WIRING
COMM	CCN COMMUNICATION LIGHT
COMP	COMPRESSOR
EXV	ELECTRONIC EXPANSION VALVE
HPS	HIGH PRESSURE SWITCH
LLT HP	LIQUID LINE TEMPERATURE THERMISTOR
OAT	OUTDOOR AIR TEMPERATURE THERMISTOR
OCT HP	OUTDOOR COIL TEMPERATURE THERMISTOR
ODT	OUTDOOR DISCHARGE TEMPERATURE THERMISTOR
OFM	OUTDOOR FAN MOTOR
OPT	OUTDOOR PRESSURE TRANSDUCER
OST	OUTDOOR SUCTION TEMPERATURE THERMISTOR
PCM	PRIMARY CONTROL MODULE (AC/HP CONTROL BOARD)
RVS	REVERSING VALVE
STATUS	SYSTEM FUNCTION LIGHT
VFD	VARIABLE FREQUENCY DRIVE

* MAY NOT BE FACTORY INSTALLED

352499-101 REV. B

Fig. 5 – HP Wiring Diagram — 208-230-1 (249VAN Models)

Variable Frequency Drive (VFD)

The VFD converts single phase 60 Hz line power into a variable frequency, variable voltage, 3-phase output to drive the compressor at the speed requested by the control system. This function is performed by first converting the incoming line power to an intermediate high voltage DC supply. The high voltage DC supply is then converted to a 3-phase output by a variable frequency inverter for driving the compressor. The VFD also provides high voltage DC supply power to the fan motor.

The VFD contains numerous protection modes for maximizing reliability and preventing faults in wiring or the compressor and fan components from causing failures within the VFD.

VFD Filter Board (191VAN/290VAN/293VAN Only)

The VFD filter board blocks electrical noise generated within the VFD from back-feeding onto the line power feed to the equipment. It contains non-replaceable fuses which will protect the VFD in the event of a severe power surge condition.

Reactors (191VAN/290VAN/291VAN/293VAN Only)

Reactors are part of the VFD incoming power conversion circuit. The reactors enable boosting of incoming line power when necessary and also provide power factor correction.

High Pressure Switch (HPS)

The HPS is a normally closed switch connected to VFD control circuitry. The HPS opens when the compressor discharge pressure reaches 670 psig. When the switch opens, a control input to the VFD is disabled and causes the compressor and fan to shut down. When compressor discharge pressure decreases to 470 psig, the switch closes and allows equipment operation to resume.

Compressor Brushless Permanent Magnet Motor (COMP)

The compressor uses a highly efficient, brushless permanent magnet motor. Motor speed is synchronized to, and controlled by the frequency of the drive provided by the VFD.

VFD + Compressor RPM

Compressor runs at variable speeds controlled by the VFD.

The VFD controls acceleration and deceleration speeds of the compressor. Speed changes are typically limited to 60 rpm per second.

The VFD will automatically limit compressor speed if compressor load current or suction and discharge conditions reach operating limits.

Fan Brushless Permanent Magnet Motor (OFM)

The fan uses a highly efficient, brushless permanent magnet motor. Motor speed is synchronized to and controlled by an on-board variable frequency inverter (VFI) integrated with the motor and located within the motor housing. The fan motor VFI uses the high voltage DC supply to drive the fan and a low voltage control signal to determine fan speed, each provided by the system VFD. The fan provides a feedback signal to the VFD indicating fan speed.

VFD + Fan Motor RPM

The fan runs at a variable speed over a range of 200 rpm to 800 rpm depending on air movement requirements.

The fan on-board VFI will automatically limit fan speed if fan load current reaches operating limits.

Internal Stator Heating

The compressor windings will occasionally be energized during the OFF cycle to start the stator heat operation, thus maintaining a sump temperature that is essential for compressor reliability. The compressor will not run during this process. The system must be powered on for a minimum of 24 hours prior to starting the system to ensure that liquid refrigerant is not present in the compressor. The stator heating function operates independently of indoor equipment and System Control and functions as needed any time the outdoor equipment is powered.

Control Sub-system

The control sub-system provides the connection point for low voltage field communication and control wiring. The control sub-system controls all operation of the equipment.

Primary Control Module (PCM)

The PCM is the heart of the equipment control system and is the connection point for all control components except for the high pressure switch.

The PCM receives equipment control requests from a communicating Evolution System Control or from a non-communicating control (traditional thermostat) in an emergency operating mode on the 191VAN/290VAN/291VAN/293VAN models. The PCM on the 249VAN models receive calls for heating or cooling from a two-stage thermostat.

NOTE: On 249VAN models the PCM is physically connected to the VFD (see Fig. 6).

The PCM receives signals from numerous sensors, including:

- Thermistors: OAT, OST, ODT, LLT, and OCT (HP Only)
- Pressure transducers: SPT, DPT

The PCM controls numerous actuators and signals, including:

- 3 control solenoids: RVS (HP Only), LLS (when used), and PEV (191VAN/290VAN/291VAN/293VAN only).
- 2 electronic expansion valves: EXV-H, EXV-VI (when used)
- VFD Control Interface
- 24VAC Control Signals

The PCM performs numerous diagnostics and supports 100+ diagnostic codes. Each of these codes is described in the Troubleshooting section. Diagnostics cover the following:

- Line voltage and communication
- Equipment configuration
- Compressor and fan operation
- Sensors
- Actuators on the 191VAN/290VAN/291VAN/293VAN

The PCM contains indicators and displays to provide operating status and conditions. The PCM on the 191VAN/290VAN/291VAN/293VAN also supports communication with the Bryant Service Tech App which provides detailed diagnostic information and reprogramming capability. Additional remote diagnostic information is available through the Bryant Connected Portal.

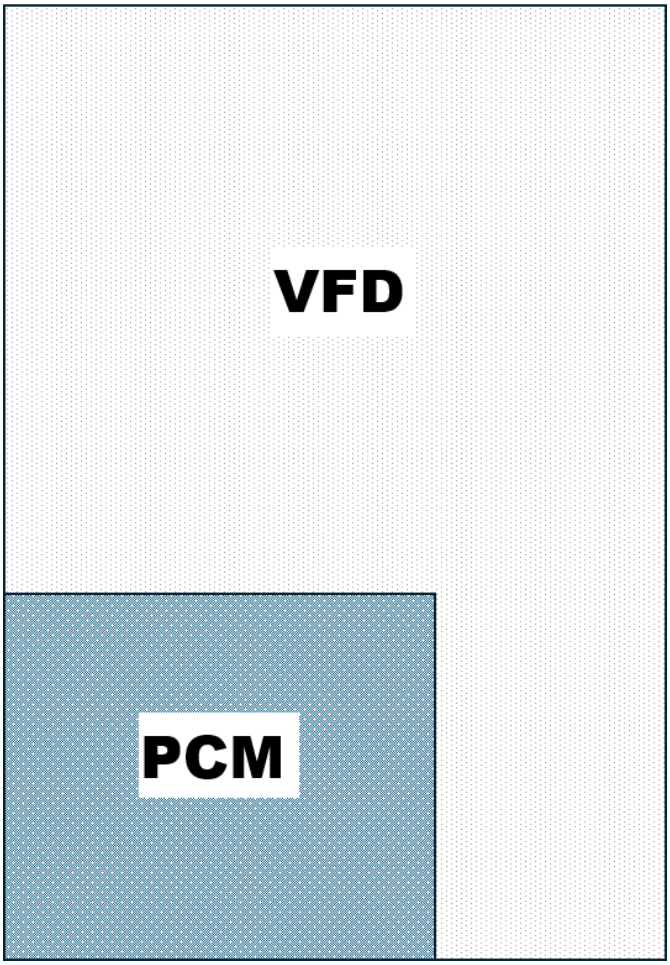

Fig. 6 – 249VAN VFD-PCM Layout

Control Connection (Communicating and Non-Communicating)

191VAN/290VAN/291VAN/293VAN Only

The primary system control interface for the PCM is the communicating Evolution System Control. The PCM also supports traditional 24VAC discrete control signals in an emergency mode of operation when a communicating control is not available.

Communicating Evolution System Control (191VAN/290VAN/291VAN/293VAN

The communicating Evolution System Control uses a 2-wire connection as shown in Fig. 3 and Fig. 7. An optional 3rd wire can be added for a ground connection. The third wire is recommended for long communication runs or if there are problems encountered with consistent communication using a 2-wire setup. The Comm light indicates whether communication is being received from a system control.

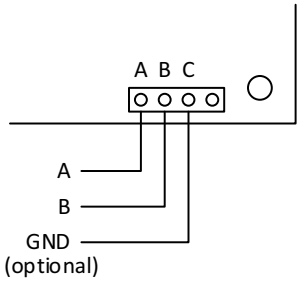

A200239

Fig. 7 – Evolution Control Connection

Non-Communicating Control (191VAN/290VAN/291VAN/293VAN Only)

Non-communicating control is for use in emergency situations only and provides a very limited functionality as either a single or two stage unit.

The non-communicating control connections are shown in Fig. 8. Specific connections depend on system configuration. Note that O and W are driven during Defrost for heat pump models.

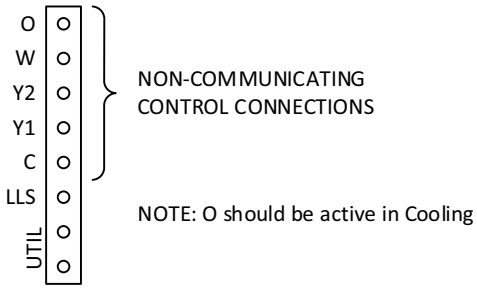

A200240

Fig. 8 – Non-Communicating Control Connection

In non-communicating mode, the Performance Mode and Defrost Interval are set using DIP switches. Switch assignments are shown in Fig. 9. Switch settings are shown in the Table 1

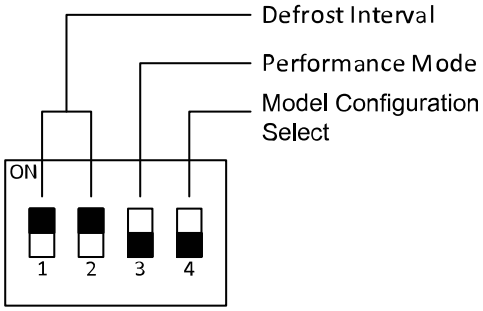

A250031

Fig. 9 – Non-Communicating DIP Switch Assignment

Table 1 – DIP Switch Settings

Switch 1	Switch 2	Defrost Interval
Up	Up	Auto
Up	Down	30 minutes
Down	Up	60 minutes
Down	Down	90 minutes

Switch 3	Performance Mode
Up	Efficiency
Down	Comfort

Control Connections (249VAN Models)

The 249VAN models are controlled using a standard two-stage thermostat utilizing 24VAC control signals. When paired with a Bryant Smart Thermostat with InteliSense™ or an indoor furnace or air handler that is InteliSense™ capable, the outdoor unit can communicate directly with those other pieces of equipment to allow greater comfort control (enhanced control). With Enhanced Control the 24VAC control signals will be ignored as the system is communicating using power line communication (PLC). In the event that PLC communication is interrupted, the system will revert to using the 24VAC control signals.

IMPORTANT: The R (Rc) signal on the PCM comes from the transformer in the equipment. The phase of this transformer connection is not controlled relative to the phase of the transformer in the indoor equipment (Rh). Wiring requirements in this manual do not connect Rc and Rh together. For any non-standard wiring, care should be taken to make sure that Rc and Rh are not connected together. Doing so may result in destroying one or both of the transformers in this and the internal equipment.

PCM Indicators and Matrix Display

The PCM contains three indicator lights (LEDs) and a dot matrix display. Indicator and display location are shown in Fig. 10. for models 191VAN/290VAN291VAN/293VAN and Fig. 11 for 249VAN models. The indicators are described briefly below. Indicator operation and interpretation is described in the Control Features section.

Status Light

The status light is a single color amber LED that indicates equipment operating status and diagnostic conditions.

Comm Light

The Comm light is a single color green LED that indicates the communication state and system control state of the equipment.

VFD Comm Light 191VAN/290VAN/291VAN/293VAN Only

The VFD Comm Light is a bi-color red / green LED that indicates the communication with the VFD.

Matrix Display

The matrix display is a 5x7 dot matrix for displaying messages and diagnostic information.

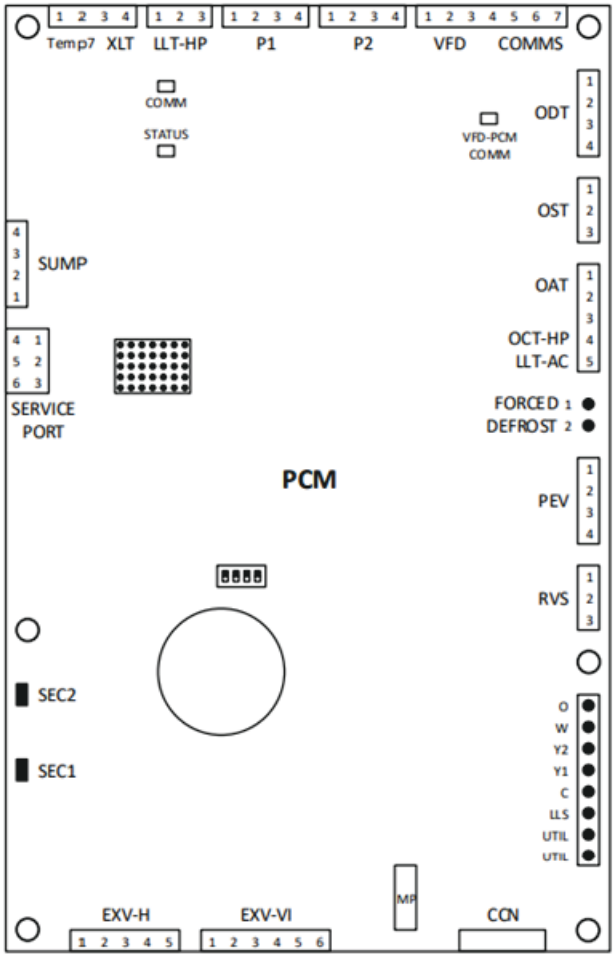

A250030

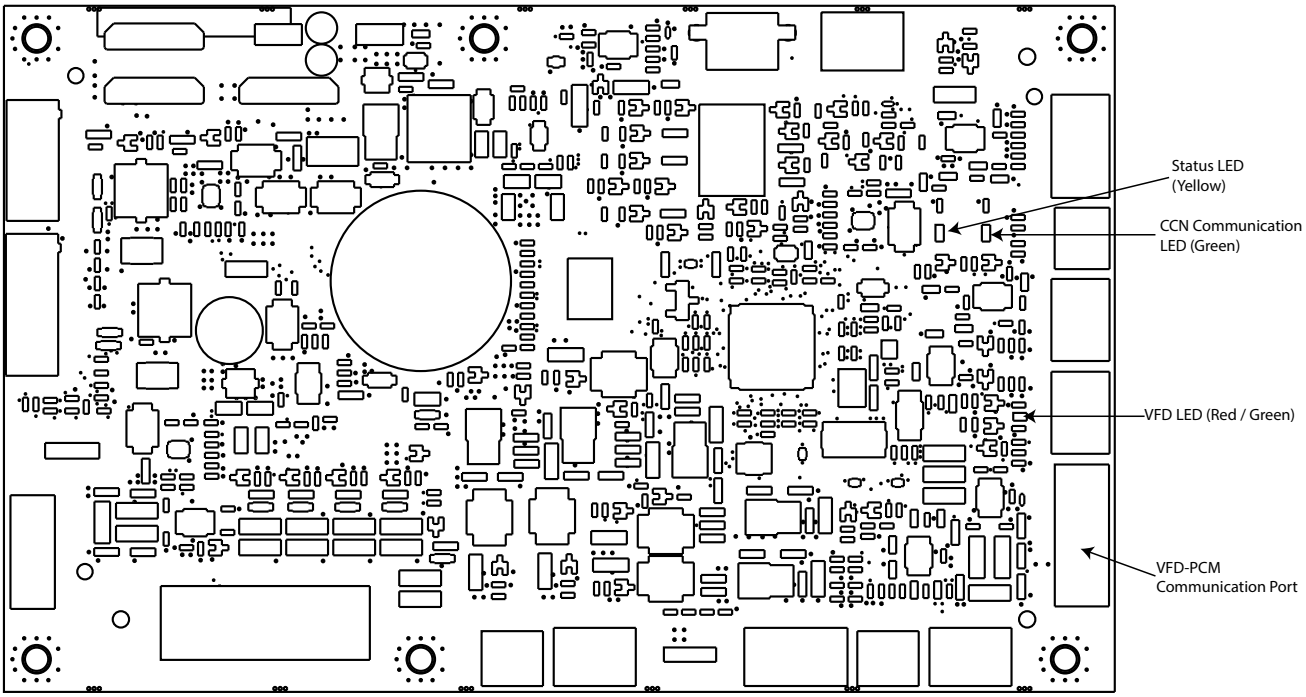

A200044

Fig. 10 – PCM Control Board - 191VAN and 290VAN,291VAN,293VAN Models

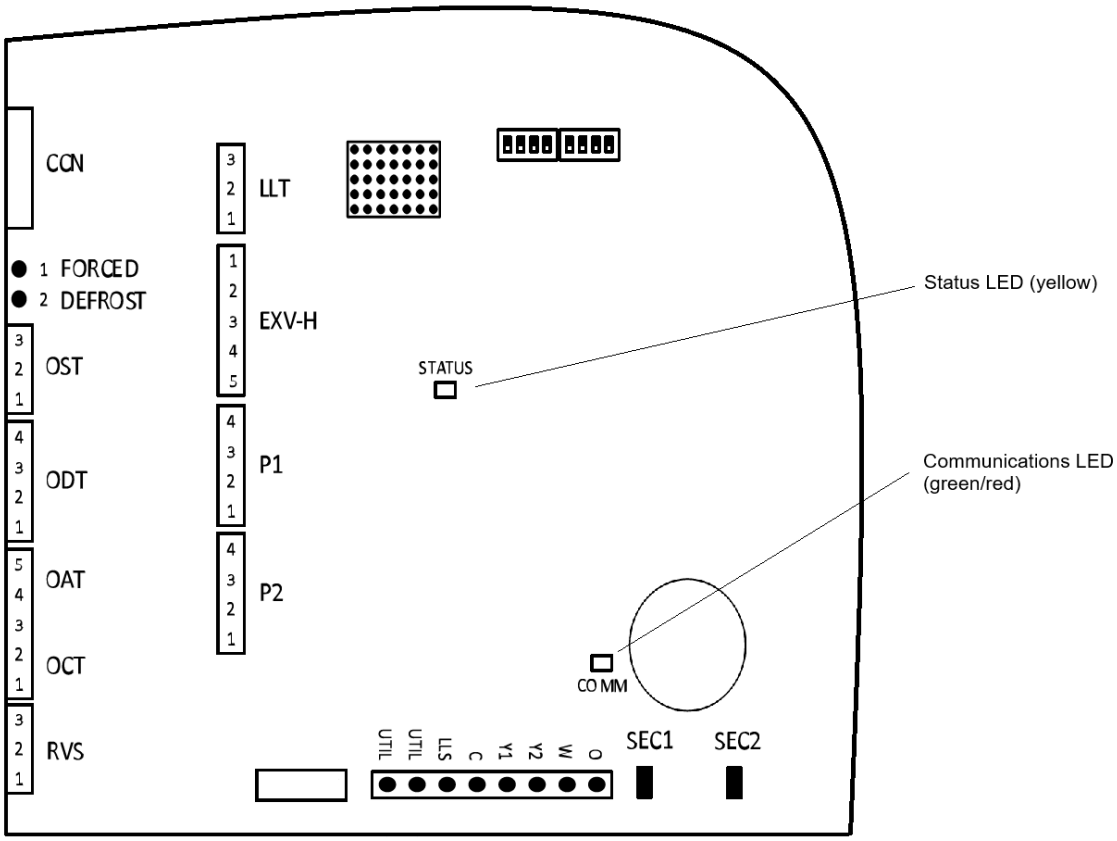

Fig. 11 – PCM Control Board - 249VAN Models

Model Plug / Configuration

Each system control board has been pre-programmed with an electronic model plug that establishes the model configuration of the system to the PCM.

This electronic model plug removes the need for a physical model plug to be installed into the PCM.

The model configuration is the type and size of equipment. Model configuration can be set by the Evolution™Connex™ System Control, the service tech app, or the dip switches.

Thermistors

The equipment contains 4 (AC) or 5 (HP) thermistors as described below.

- Outdoor Ambient Temperature (OAT)
- Outdoor Suction Temperature (OST)
- Outdoor Discharge Temperature (ODT)
- Liquid Line Temperature (LLT)
- Outdoor Coil Temperature (OCT) - HP Only

Pressure Sensors

The equipment contains two pressure transducers:

- Suction Pressure Transducer (SPT)
- Discharge Pressure Transducer (DPT)

The SPT and DPT are identical parts installed on the suction side of the compressor and discharge outlet of the compressor respectively. The transducers have a sensing range of 0 to 620 psig. The connection points to the PCM are labeled P1 and P2 and either pressure transducer can be connected to either input. The software in the PCM detects which transducer is connected to which input and assigns the signals accordingly.

VFD Control Connection
(191VAN and 290VAN,291VAN,293VAN Models Only)

The VFD Control Connection consists of 6 wires as shown in Fig. 3. Two of the wires provide a control enable signal. Four of the wires are used for communication between the PCM and the VFD.

Pressure Equalization Valve (PEV)
191VAN and 290VAN,291VAN,293VAN Models Only

The PEV is actuated by a 24VAC control solenoid. The PCM controls the PEV by providing a drive signal to the PEV control solenoid. The PEV is used to reduce the pressure differential between the compressor suction and discharge ports at startup and shutdown. During steady operation, the PEV will be closed.

Reversing Valve (RVS)
(HP Only)

The RVS is actuated by a 24VAC control solenoid. The PCM controls the RVS by providing a drive signal to the RVS control solenoid. The RVS is used to reverse refrigerant flow between the Cooling and Heating modes in a heat pump. AC (191VAN) equipment does not contain an RVS. The RVS will default to the heating position when not energized. It will be energized during Cooling operation and during the Defrost mode in Heating operation.

Heating Electronic Expansion Valve (EXV-H)
(HP Only)

The EXV-H is an electronically controlled needle valve for regulating refrigerant flow during heating operation. The EXV-H is driven by a 12VDC, 2-phase, uni-polar stepper motor. The EXV-H has a 475 step range between fully closed and fully open. The PCM drives the EXV at a rate of 77 steps per second. The PCM initializes the EXV-H to the closed position when power is applied to the equipment. This process takes approximately 7 seconds.

When the compressor is not running, the EXV-H is closed. When operating in Cooling or in Defrost mode of heating, the EXV-H will be fully open. When operating in Heating mode, the EXV-H is actively controlled to maintain suction and discharge conditions to the control target value. The EXV-H is also responsible for prevention of refrigerant migration when the compressor is not running.

Accessory Control Components Utility Curtailment
191VAN and 290VAN,291VAN,293VAN Models Only

The Utility Curtailment feature is controlled by an optional external switch or relay wired to the two UTIL connections on the PCM as shown in Fig. 12. The UTIL connections are wired to the normally open switch contacts. This input allows a power utility device to interrupt equipment operation during peak load periods. When the utility sends a signal to shut the system down, the equipment sends a curtailment indication to the Evolution™ Connex™ System Control. The Evolution™ Connex™ System Control will command an equipment shutdown and may display a curtailment notification. See Evolution™ Connex™ System Control installation or service instructions for more detail.

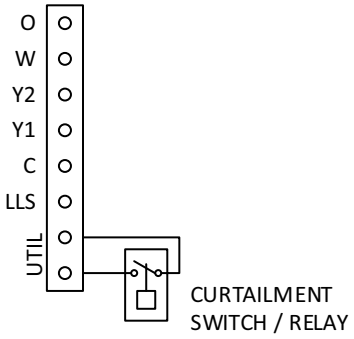

A200242

Fig. 12 – Curtailment Switch/Relay Connection

Liquid Line Solenoid Valve (LLS)
191VAN Only

The LLS is an optional and external normally closed valve that is installed in AC systems with large vertical distance offsets between the indoor equipment and outdoor equipment. The outdoor equipment will energize the valve when the compressor is running, and de-energize the valve when the compressor is not running to prevent gravity-induced migration of liquid refrigerant. The LLS is wired between the C and LLS contacts as shown in Fig. 13.

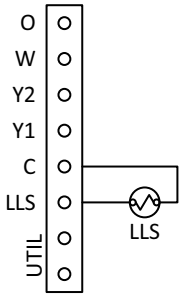

A200243

Fig. 13 – Curtailment Switch / Relay Connection (LLS)

CONTROL FEATURES AND OPERATION

Equipment Configuration (Model Plug)

The system PCM has been pre-programmed with an electronic model plug that establishes the model configuration, i.e. size and type, of the unit. This electronic model plug removes the need for a physical model plug to be installed into the PCM. When replacing the PCM and/or the model configuration is unknown, the model configuration can be set using the Evolution™ Connex™ System Control, the Service Tech App, or the PCM dip switches. Refer to the Troubleshooting section under System Diagnostics and Equipment Configuration for more information on establishing the model configuration for the system.

Model configuration diagnostics will occur while the equipment is operating, but changes to a model configuration using a physical model plug will not affect equipment operation until power is cycled. An electronically set model configuration will take effect immediately. The PCM remembers the most recent valid model configuration detected at power-up, regardless of that configuration coming from an electronic or physical model plug. Model configuration memory is preserved across power cycles, so proper equipment operation will continue even if power to the equipment is lost and then restored. An installed model plug at power-up takes precedence over a model configuration value stored in memory. If a new valid model plug value is detected at power-up, the model configuration memory will be updated to that new value.

Performance Mode

The PCM supports equipment operation in two performance modes: Efficiency and Comfort. Efficiency mode provides maximum possible operating efficiency. Comfort mode modifies operation to provide optimal comfort to the home.

Compressor Operation

Compressor Protect Delay

The compressor is inhibited from running within 5 minutes of power being applied to the equipment or within 5 minutes of previous operation. The Compressor Protect Delay can be overridden as described in Overrides in the Troubleshooting section.

Starting

The compressor will not start if the differential pressure between suction and discharge is greater than 100 psi. When a capacity demand is received, the outdoor fan begins operating first. Once the fan begins operating, the compressor is started. The compressor will initially ramp to 2,700 rpm and dwell at that speed until the required amount of discharge super heat is developed.

Running

Once start-up super heat is reached, the compressor will ramp up or down to the appropriate continuous operating speed. Compressor operating speed depends on the capacity being requested by the Evolution™ Connex™ System Control, or stage being called for by the thermostat, the Operating Mode (Cooling vs. Heating), the outdoor air temperature, and the Performance Mode setting and the current system operating parameters.

Compressor Reliability Protection

During operation, the PCM monitors the operating point of the compressor relative to the reliability operating envelope. If operation attempts to exceed reliability limits, system operation is modified to bring operation back within the envelope. Examples of modified operation include increasing fan speed and reducing compressor speed.

During extreme operating conditions, operation may not be able to be maintained within the reliability envelope. If this occurs, the PCM will shut down the system and set a diagnostic code indicating the type of limit being exceeded. Extreme operating conditions are usually partially or completely created by non-ideal operating conditions that can be corrected by equipment service. Examples of such conditions include blocked or partially blocked coil on the indoor or outdoor equipment, and under-charged or over-charged systems.

Sump Heat

When the compressor is not running, the compressor sump may need to be heated to prevent liquid refrigerant from collecting in the sump. This condition is most likely with reduced outdoor temperatures. To heat the compressor sump, these systems use a stator heating function where the VFD flows a DC current through the motor windings. This stator current generates heat in the motor and radiates through to the compressor shell and sump.

Fan Operation

The fan generally runs when the compressor is running. When the equipment begins to operate, the fan will start first, then the compressor will start. Fan speed is adjusted based on the Operating Mode (Cooling vs. Heating), the outdoor air temperature and compressor speed, and the current system operating parameters.

Intermittent Low Fan Speed

In some operating conditions such as Low Ambient Cooling, airflow requirements are below the minimum continuous fan speed. In these cases, the fan will operate intermittently. The fan on/off cycle during this operation is approximately 40 seconds.

Fan Operating Exceptions

There are some operating conditions where the fan will operate independently of the compressor. During the defrost cycle, the fan will not operate while the compressor is running. It is possible for the equipment to shut down during a defrost cycle. On the next operating cycle, the equipment will resume in defrost mode. In this case, the fan will run briefly at power-up and then shut down while the previously interrupted defrost cycle completes.

The fan may intermittently shut down during Low Ambient Cooling operation, especially at colder temperatures and if the wind is blowing during operation.

If the compressor is shut down due to a discharge pressure limit or VFD or compressor high discharge temperature limit, the fan will continue to run for a period of time after the compressor shuts down in order to alleviate the excessive temperature or pressure condition.

Cooling Control

Cooling mode will operate at any outdoor ambient temperature of 55°F (12.78°C) or higher. There is no set upper limit of outdoor ambient temperature operation. The system will function as requested as long as operating conditions are maintained within the reliability and safety envelopes. On 191VAN and 290VAN,291VAN,293VAN models if Low Ambient Cooling is enabled on the Evolution Connex System Control, the cooling mode will operate down to 0°F(-17.78°C). 249VAN models will operate down to 32°F(0°C) with no need for additional kits.

Heating Control

(HP Only)

Heating mode will operate up to an outdoor ambient temperature of 75°F (23.9°C). Heating mode will start and be available down to at least -10°F(-23.3°C) and colder depending on equipment model. Refer to unit specific Product Data. The equipment will continue to operate until some operating condition limit is reached.

Super Heat Control

Super heat control is provided by the EXV-H. The PCM continuously adjusts the EXV-H to keep suction super heat operating at the target control value.

Defrost Mode

(HP Only)

Defrost mode is part of Heating Control. Because the outdoor coil operates at a temperature below the dew point, it has the potential for condensing moisture from the air. When the coil temperature is at freezing conditions, that condensation will occur as frost. As frost builds on the coil, the frost acts as an insulator and reduces the heating capacity of the coil. Periodic defrost is required to remove frost and restore heating capacity.

Defrost Interval

The Defrost Interval is the amount of time that heating operation can occur in frost-accumulating conditions before a defrost cycle is required to clear the frost. Frost accumulating conditions are defined as operation with a coil temperature below 35°F. The Defrost Interval can be set to a fixed value, or it can be determined automatically by the control. Automatic operation is recommended for most systems.

The Defrost Interval is set in the Evolution™ Connex™ Control and communicated to the outdoor equipment. In non-communicating systems, the Defrost Interval is set with DIP switches on the PCM. Available Defrost Interval settings are:

- Auto
- 30 minutes
- 60 minutes
- 90 minutes

Auto mode is recommended for all systems unless unusual application conditions indicate a fixed setting should be used. Auto mode will adjust the defrost interval dynamically based on real-time frost accumulation and provide optimum system performance.

Defrost Process

The defrost process begins when the defrost interval time is reached under frost-accumulating conditions. The defrost process ends when the coil has sufficiently thawed and been allowed time to drain. Defrost may also terminate as a result of a time limit - usually 15 minutes. If Defrost is forced via the Forced Defrost input, defrost will be initiated regardless of frost accumulation time or outdoor temperature. A forced defrost will run at least 30 seconds, but may not run longer than 30 seconds if ambient temperature is well above freezing.

The Defrost Process proceeds as follows:

1. The compressor ramps to RVS transition speed
2. RVS is switched to defrost (cooling) position (fan stays on)
3. Compressor ramps to defrost speed
4. Fan turns off when coil temperature increases to ambient temperature
5. Defrost completes when coil conditions reach target or defrost timeout.
6. The compressor ramps to RVS transition speed
7. RVS is switched to heating position (fan stays off)
8. Compressor ramps to heating speed
9. Fan turns on when coil temperature falls to ambient temperature

PCM Indicators and Display Operation

Operation and interpretation of each indicator and display is described.

Status Light

The operation modes and meaning for each mode of the status light is described in the table below for PCM SW versions 4.0 for 191VAN and 290VAN,291VAN,293VAN models and PCM SW versions 1.0 and above for 249VAN models.

Mode	Meaning
Off	Power is removed from the PCM or there is a fundamental PCM fault.
On	Equipment is in standby with no diagnostic conditions preventing or limiting operation.
1 Slow Flash	Equipment is operating at low capacity (low stage in emergency mode).
2 Slow Flashes	Equipment is operating at high capacity (high stage in emergency mode).
Continuous Slow Flash	Equipment operation has been interrupted or is being limited.
Continuous Fast Flash	Equipment is in a lockout condition as a result of a diagnostic condition or is in Diagnostic Code Recall mode.

For PCM software versions older than 4.0 on 191VAN and 290VAN,291VAN,293VAN models, use the following table:

Mode	Meaning
Off	Equipment is in standby with no diagnostic conditions preventing or limiting operation.
On	N/A
1 Slow Flash	Equipment is operating at low capacity (low stage in emergency mode).
2 Slow Flashes	Equipment is operating at high capacity (high stage in emergency mode).
Flashing	A diagnostic code is present. The first digit of the fault base code can be determined by the short flashes and the second digit of the fault base code can be determined by the long flashes.
Continuous Fast Flash	N/A

PCM Comm Light (191VAN and 290VAN,291VAN,293VAN Models)

The Comm light indicates communication received from a communicating control. If the Comm light is On, then communication has been received within the last 2 minutes and the equipment is operating in normal communication mode. If the Comm light is Off, then communication has not been received within the last 2 minutes and the equipment is operating in emergency communicating mode. After 2 minutes of operating in emergency communicating mode, the equipment will look for a non-communicating control signal. If no signal is detected, the unit will shut off.

PCM Comm Light (249VAN Models)

The green Comm light on the outdoor board indicates successful communication with the VFD.

A flashing green LED indicates active communication with VFD.

A flashing red LED indicates failed communication with the VFD.

If the LED is off, it indicates that there is no communication with the VFD, which only happens in the event of multiple failed communications. A fault code will be set.

VFD Comm Light (191VAN and 290VAN,291VAN,293VAN Models Only)

The VFD Comm light blinks every time there is a message received from the VFD. If a message is received with no errors, the light will flash green. If a message is received with an error, or if a message is expected and not received, the light will flash red. When the equipment is operating, communication is occurring very frequently. If communication and the equipment are both operating properly, the light will continuously flash.

Matrix Display

The matrix display will scroll a sequence of up to four active diagnostic codes. If more than four diagnostic codes are active at one time, then only the four highest priority codes are displayed. Codes are displayed in decreasing order of priority beginning with the highest priority code first. Scrolling repeats continuously with a brief pause between each sequence. If there are no codes active, then the display will remain blank. There are additional operating modes of the display associated with charging and troubleshooting procedures. These are described in the Control Features And Operation section under Charge Mode and the Troubleshooting section under Compressor Protection Delay Override and Diagnostic Code Recall.

Manufacturer reserves the right to change, at any time, specifications and designs without notice and without obligations.

Re-programmability (191VAN and 290VAN,291VAN,293VAN Models Only)

The software in both the PCM and the VFD can be reprogrammed. Software updates are retrieved from the cloud by the Evolution™ Connex™ Control and downloaded to the equipment. The equipment can operate normally during the download process. Once the homeowner or service tech approves the update, the equipment will shut down (if operating), update the software as necessary, and resume operation. The software update process usually takes no more than a few minutes.

The software can also be updated from the Bryant Service Tech App. This is the only software update method for equipment not connected to Internet and registered to the Bryant Cloud through the Evolution™ Connex™ System Control.

Re-programmability (249VAN Models Only)

The software in both the PCM and the VFD can be reprogrammed. Software updates are provided over-the-air (OTA) for compatible thermostats utilizing power line communication (PLC) or manually using a USB memory device. The software can be downloaded from the HVAC Partners product page. Follow instructions provided with software.

You will obtain best results using a USB memory device that is between 4GB and 32GB in size and formatted as a FAT32 device. Any other formatting (NTFS, exFAT, etc.) may result in an error.

Before starting the software installation process, the current software can be determined by toggling DIP switch #8 from low to high. The procedure must only be performed by a trained technician with the required PPE. The 5x7 segment LED display will scroll the PCM software version, VFD software version, outdoor unit tonnage, and outdoor unit type (AC or HP) in that order.

To update the software, insert the USB memory device into the PCM board. The PCM will automatically begin the software update process. Depending on the files present one or more control updates will take place.

While the PCM software is downloading the progress will scroll the percentage of download. Once the download is complete the PCM will automatically restart and begin installing the new software. During installation, the display will gradually illuminate, indicating progress. After installation the PCM will restart once more.

If the VFD software is also present on the USB device, it will automatically begin downloading after the PCM installation is complete. Similar to the PCM, the percentage of download will scroll on the display. Once the download is complete the VFD update process finishes automatically. You can now remove the USB device.

NOTE: If the unit is connected to an InteliSense™ enabled thermostat, an InteliSense™ reset/relearn is required after completing the software update. Please refer to the thermostat documentation for instructions.

VFD LEDs

(191VAN and 290VAN,291VAN,293VAN Models)

The VFD is equipped with several LEDs that indicate different statuses.

WARNING

ELECTRICAL HAZARD - HIGH VOLTAGE!

Failure to follow this warning could result in personal injury or death.

Electrical components may hold charge. DO NOT remove control box cover for 2 minutes after power has been removed from unit.

PRIOR TO TOUCHING ELECTRICAL COMPONENTS:

Verify less than zero (0) vdc voltage at VFD connections shown on cover.

Table 2 – VFD LED Functions - 191VAN & 290VAN,291VAN,293VAN

LED Identification	Color	Function
R1	Red	Used to indicate that high voltage is present in the DC capacitors. If this LED is lit, then a DC voltage greater than 40V is present.
G1	Green	Blinks when the VFD receives a message from PCM.
G2	Green	On when VFD is in normal status. It is off when VFD is fault status.
G3	Green	On when the VFD micro controller relay is closed. The signal of relay is controlled by PCM.
A1	Amber	On when 12V source is normal.
A2	Amber	On when the main relay is closed.

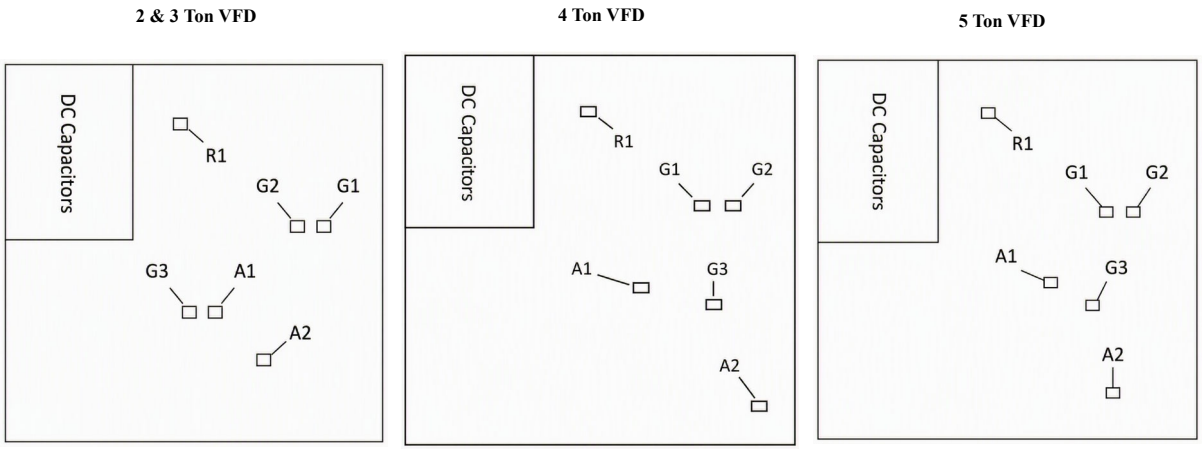

Fig. 14 – VFD LED Location for Each Tonnage
191VAN and 290VAN,291VAN,293VAN Models

VFD LEDs (249VAN Models)

The VFD is equipped with an LED that indicates powered up status. When the VFD has power, this LED is solid green. When the VFD capacitors have discharged, the LED will turn off. See Fig. 15 for the approximate location.

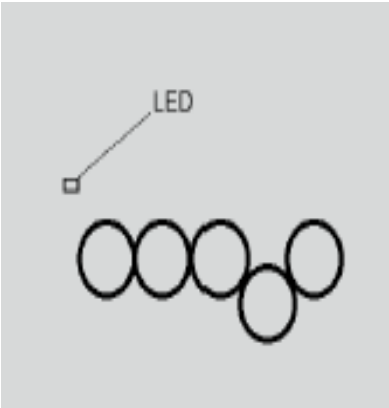

Fig. 15 – VFD LED Location (249VAN Models)

Charge Mode

CAUTION

UNIT OPERATION AND SAFETY HAZARD

Failure to follow this caution may result in minor personal injury, equipment damage or improper operation.

Observe the following:

1. Do not overcharge system with refrigerant.
2. Do not operate unit in a vacuum or at negative pressure.
3. Do not disable low pressure transducer or system safety devices such as discharge line thermistor or the high pressure switch.
4. Dome temperatures may be hot.
5. Discharge line thermistor is engaged tight on the discharge tube.

CAUTION

PERSONAL INJURY HAZARD

Failure to follow this caution may result in personal injury.

Wear safety glasses, protective clothing, and gloves when handling refrigerant and observe the following:

– Service valves are equipped with Schrader valves.

CAUTION

ENVIRONMENTAL HAZARD

Failure to follow this caution may result in environmental damage.

Federal regulations require that you do not vent refrigerant to the atmosphere. Recover during system repair or final unit disposal.

WARNING

PERSONAL INJURY HAZARD

Failure to follow this warning could result in personal injury or death.

Do not use power tools to open and close service valves.

Power tools can cause valve stem to suddenly be ejected from the valve body followed by a high pressure refrigerant leak.

191VAN, 290VAN, 291VAN, 293VAN Models

Factory charge amount and desired subcooling are shown in the Evolution™ Connex™ System Control. To properly check or adjust charge, conditions must be favorable for subcooling charging in cooling mode. Favorable conditions exist when the outdoor temperature is between 65°F (18°C) and 105°F (40.6°C) and the indoor temperature is between 65°F (18°C) and 80°F (26.7°C). If the temperatures are outside of these ranges, weigh in charge only. When the temperatures are in the desired range, you may return to the installation site and verify the subcooling to confirm system charge level.

Unit is factory charged for 15ft (4.57 m) of lineset and for smallest internal volume AHRI-rated indoor coil combinations. If any refrigerant charge adjustment is required based on the selected indoor coil combination, lineset dimensions, environment, and outdoor unit coil material, the Evolution™ Connex™ System Control will calculate and display the target subcooling and the amount of additional charge to be added. Therefore the Evolution™ Connex™ System Control is the source of information for charging the system correctly and is critical to accurately input system configuration parameters to ensure proper system operation. Perform a final charge check only when in cooling and OD is between 65°F (18°C) and 105°F (40.6°C).

Table 3 can be used as a guideline for determining which environment to select during system configuration setup.

Table 3 – Environment Type Guideline

Average Annual Relative Humidity (%)	Type
<45	Arid
45 - 65	Semi-Arid
65+	Humid

NOTE: Evolution™ Connex™ System Control indicates acceptable conditions for subcool charging mode. Do not use subcooling charge method if outside 65°F (18°C) and 105°F(40.6°C) outdoor temperature. Subcool charging mode will not be available if conditions are not acceptable.

249VAN Models

Factory charge amount and desired subcooling are shown on the unit rating plate. Charging method is shown on information plate inside unit. Favorable conditions exist when the outdoor temperature is between 65°F (18°C) and 105°F (40.6°C) and the indoor temperature is betwdeen 65°F (18°C) and 80°F (26.7°C). If the temperatures are outside of these ranges, weigh in charge only. When the temperatures are in the desired range, you may return to the installation site and verify the subcooling to confirm system charge level.

Unit is factory charged for AHRI Designated Tested Combination indoor unit when connected by 15 ft. of lineset. Adjust charge by adding or removing 0.6 oz/ft (.018 kg/m) of 3/8 liquid line above or below 15ft (4.57 m) respectively.

On the 249VAN models, dip switch 1 permits the system to go into Refrigerant Charging Modes.

Refrigerant Charging Modes - Switch 1

Switching the Refrigerant Charging Modes switch to HIGH will cause the 5x7 LED display to scroll the following data: CCC, HCC, EVAC, and PUMP. These correspond to the following modes - Cooling Check Charge, Heating Check Charge, Evacuation, and Pumpdown.

Switching the Refrigerant Charging Modes switch to LOW while the desired mode is scrolling will select and enter that mode of operation. If no mode is selected, the scrolling will timeout after 60 seconds. At that point the switch should be moved back to the LOW position.

To exit one of the Refrigerant Charging Modes, switch the Refrigerant Charging Modes switch from LOW to HIGH. That will put the system into normal operation. At that point the scrolling will timeout after 60 seconds and the switch should be moved back to the LOW position.

Check Charge - Cooling (CCC) / Heating (HCC)

Selecting CCC will operate the system at fixed, charge mode operating parameters. This can be used to evaluate subcooling using the sensors on the unit. The current subcooling value determined by the unit sensors will be scrolled on the 5x7 LED display.

This mode should only be selected if the indoor and outdoor units are in the acceptable temperature range for subcooling. Before adjusting charge, it is recommended to verify subcooling measurements at the liquid service valve.

IMPORTANT: This mode can only be entered if the OAT sensor is within the acceptable range of 60°F-105°F and the IAT sensor (if applicable) is within the acceptable range of 65°F-80°F. If it's outside these ranges, weigh in charge only. When the temperatures are in the desired range, you may return to the installation site and verify the subcooling to confirm system charge level.

Selecting HCC will operate the system at fixed, charge mode operating parameters design for heating. This mode can be paired with the Heating Check Chart, located on the inside of the control box cover of the ODU, to evaluate if a system is significantly over or under charged by measuring suction and discharge pressures and superheat measured at the vapor service valve. DO NOT adjust charge using the Heating Check Chart. If system is suspected to be incorrectly charged, recover refrigerant according to the Service Manual and recharge using the "full system charge/recharge" method.

IMPORTANT: This mode can only be entered if the OAT sensor is within the acceptable range of -8°F - 75°F and the IAT sensor (if applicable) is within the acceptable range of 65°F - 80°F. If it is outside these ranges, weigh in charge only. When the temperatures are in the desired range, you may return to the installation site and verify the subcooling to confirm system charge level.

Pump Down (PUMP) & Evacuation (EVAC)

Because this system has a VFD controlled compressor the conventional procedure cannot be used to "pump down" and isolate the refrigerant into the outdoor unit. The PCM control board has provisions to assist in performing this function.

1. Connect gauges to liquid and vapor or suction capillary service ports to monitor operating pressures during and at completion of the procedure.
2. Select PUMP by switching the Refrigerant Charging Modes switch to LOW.
3. Unit will begin running in cooling mode after a brief delay.
4. Close the liquid service valve.
5. The unit will run with the low pressure protection set to indicate pump down is complete when the suction pressure drops below 20 psig. Compressor protections are still active to prevent damage to the compressor or VFD (high pressure, high current, etc.).
6. Once system indicates pump down complete or failure to complete shutdown, close vapor service valve.
7. A recovery system will be required to remove final quantity of refrigerant from indoor coil and line set. Refer to the Service Manual for specific evacuation and purge steps required after recovering refrigerant and before making any repairs to the indoor unit or lineset.
8. Remove power from indoor and outdoor unit prior to servicing unit.

Evacuation and Recovery of Refrigerant (EVAC)

Because this system has an EXV for the heating expansion device, additional steps must be taken to open the EXV if the heat pump unit must be evacuated for service reasons. If the EXV is not open when pulling a vacuum or recovering refrigerant from the heat pump unit, extended evacuation time may be required and/or inadequate vacuum obtained. The PCM control board has provisions to open the EXV for refrigerant recovery and/or evacuation.

1. Connect gauges to liquid and vapor or suction capillary service ports to monitor operating pressures during and at completion of the procedure. Attach recovery system or vacuum pump to gauge set as needed for the service procedure. The service valves must be open to evacuate the unit through the line set service ports. The suction capillary service port is a direct connection to the suction port of the compressor.
2. Select EVAC by switching the Refrigerant Charging Modes switch to LOW.
3. Begin evacuation or refrigerant recovery as required for the procedure.
4. Remove power from indoor and heat pump unit prior to servicing unit. The EXV will retain the open position

TROUBLESHOOTING

TROUBLESHOOTING CONTROL FEATURES

Diagnostics Display

Active diagnostics will be continuously displayed on the matrix display on the PCM. Active diagnostics can also be displayed on the system control (UI) screen for 191VAN/290VAN/291VAN/293VAN models. If the system control loses communication with the equipment after a diagnostic code is set by the PCM, the base code will be retained in the system control but the expansion code will show as “00”, e.g. 38-18 will show as 38-00. The base code may be enough to troubleshoot the system, however, the complete diagnostic code can be retrieved from the equipment by using the service technician app (191VAN/290VAN/291VAN/293VAN models) or Diagnostic Code Recall mode at the PCM.

Multi-Function Forced Defrost Input (J3)

The forced defrost pins are located near the right edge of the PCM slightly above center, between two connectors. The Forced Defrost input has the following functions:

- Forcing Defrost
- Overriding the Compressor Protect Delay
- Activating the Diagnostic Code Recall Function

These multiple functions are available at the PCM header only. The Forced Defrost function on the Evolution™ Connex™ System Control provides only the Defrost Forcing function. Each of these functions is described below.

Forced Defrost

A Forced Defrost event will begin when the Forced Defrost header pins are shorted for 5 seconds while the following conditions apply:

- The equipment is operating in Heating Mode (compressor is running)
- A defrost cycle is not already in progress

The defrost event will begin with a change in compressor speed followed by actuation of the reversing valve. For more information on the Defrost Process, refer to Defrost Mode under Control Features and Operation section.

Compressor Protect Delay Override

The Compressor Protect Delay will be overridden allowing immediate equipment start when the Forced Defrost header pins are shorted for 1 second while the equipment is not operating (compressor is off).

The override condition will be confirmed with the word OVERRIDE scrolled across the matrix display until the compressor starts. Note that the compressor will not attempt to start unless a demand is present, and until pressure equalization is complete (if necessary) and the fan has successfully started.

Diagnostic Code Recall

The Diagnostic Code Recall mode will be enabled if the Forced Defrost pins are shorted when power is applied to the equipment. It is not possible to enter Diagnostic Code Recall mode while power is applied to the equipment. The recommended procedure is to remove power from the equipment, apply a clip wire between the Forced Defrost header pins and then apply power to the equipment.

While in Diagnostic Code Recall mode, the Display Matrix will scroll the word RECALL followed by the most recent, highest priority diagnostic code if that code occurred with the last 240 hours of equipment operation. The display will repeat continuously while recall mode is active. No code will be displayed if the most recent, highest priority diagnostic code occurred more than 240 hours of equipment operating time before entering recall mode. No code will be displayed if there have never been any diagnostic codes active. If there is no code to display, then only the word RECALL will be scrolled across the display while the mode is active.

The equipment will not operate while the Diagnostic Code Recall mode is active.

The equipment will exit Diagnostic Code Recall mode when the short is removed from the Forced Defrost header pins, or 15 minutes after power is applied to the equipment if the short is still present. Upon exiting recall mode, the recall code display will stop, any active codes will begin to be displayed, and the equipment will resume normal operation.

SYSTEM DIAGNOSTICS

24VAC Power Distribution

⚠ CAUTION

EQUIPMENT DAMAGE HAZARD

Failure to follow this caution may result in equipment damage or improper operation.

Do not connect the equipment 24VAC supply (Rc) to the indoor equipment 24VAC supply (Rh).

IMPORTANT: The 24VAC power (Rc) in the PCM comes from the transformer in the equipment. The phase of this transformer connection is not controlled relative to the phase of the power provided by the transformer in the indoor equipment (Rh). Wiring requirements in this manual do not connect Rc and Rh together. For any non-standard wiring, care should be taken to make sure that Rc and Rh are not connected together. Doing so may result in destroying one or both of the transformers in this and the internal equipment.

The transformer in the equipment provides power to the PCM and numerous control components in the equipment. The power distribution and fuse connections for this power distribution are shown in Fig. 16.

NOTE: Not all models have all components shown in Fig. 16.

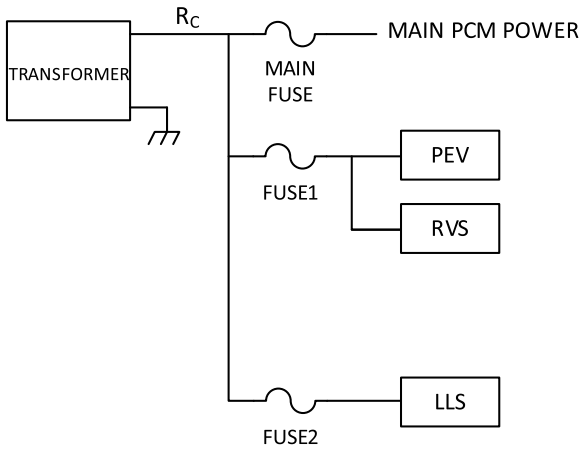

A200252 no BTM

Fig. 16 – 24VAC Power Distribution Diagram

Communication - 191VAN,290VAN,291VAN 293VAN Models Only

If communication with the Evolution™ Connex™ System Control is lost, this will be indicated by the Comm light being off. There is no diagnostic fault associated with this condition. When communication with the Evolution™ Connex™ System Control is lost, the equipment will default to the discrete control inputs for operation. Refer to Control Connection in the Control Sub-System section for further information.

Equipment Configuration (Model Plug)

⚠ CAUTION

EQUIPMENT DAMAGE HAZARD

Failure to follow this caution may result in equipment damage or improper operation.

Do not attempt to operate system with incorrect model plug as this could cause equipment damage.

The system PCM has been pre-programmed with an electronic model plug that establishes the model configuration, i.e. size and type, of the unit. This electronic model plug removes the need for a physical model plug to be installed into the PCM. A set of physical model plugs for all sizes is available as a service component for use when replacing the PCM and/or the model configuration is missing or unknown.

The model configuration can be set using the PCM dip switches. Additionally, 191VAN, 290VAN, 291VAN, 293VAN models can also use the Evolution™ Connex™ System Control or The Service Tech App to set model configuration. The correct model configuration must be set for the system to operate properly (see Table 4). Refer to the Service Manual for more information on model configurations.

Table 4 – Model Plug Information

MODEL NUMBER	MODEL PLUG NUMBER	PIN RESISTANCE (K-ohms)		PCM Model
		Pins 1-4	Pins 2-3	HP
191VAN024	HK70EZ009	5.1K	91K	24K-AC
191VAN036	HK70EZ021	11K	39K	36K-AC
191VAN048	HK70EZ033	18K	11K	48K-AC
191VAN060	HK70EZ045	18K	220K	60K-AC
290VAN024	HK70EZ003	5.1K	24K	24K-HP
290VAN036	HK70EZ015	5.1K	360K	36K-HP
290VAN048	HK70EZ027	11K	150K	48K-HP
290VAN060	HK70EZ039	18K	62K	60K-HP
291VAN054	HK70EZ091	39K	150K	54K-HP
293VAN024	HK70EZ003	5.1K	24K	24K-HP
293VAN036	HK70EZ015	5.1K	360K	36K-HP
293VAN048	HK70EZ027	11K	150K	48K-HP
293VAN060	HK70EZ039	18K	62K	60K-HP
249VAN024	HK70EZ003	5.1K	24K	24K-HP
249VAN036	HK70EZ015	5.1K	360K	36K-HP
249VAN048	HK70EZ027	11K	150K	48K-HP
249VAN060	HK70EZ039	18K	62K	60K-HP

⚠ CAUTION

EQUIPMENT DAMAGE HAZARD

Failure to follow this caution may result in equipment damage and/or improper operation.

Do not attempt to install an incorrect model plug as this could cause some units to operate incorrectly and fail prematurely.

Establishing Equipment Configuration - PCM Dip Switches

To establish the model configuration, enter the Menu Mode by setting DIP switch #4 (191VAN, 290VAN, 291VAN, 293VAN) or DIP switch #2 (249VAN) ON. In this mode, a list of compatible PCM Model values is scrolled based on the detected VFD model. Set the DIP switch OFF when the desired PCM model from Table 4 is scrolling across the PCM display. For example, if a 5 Ton VFD model is detected; the list of compatible PCM models would be 60K-AC, 60K-HP, and NOCFG. To set the PCM's model as a 5 Ton heat pump; the user can set the DIP switch OFF when 60K-HP is being scrolled.

When a model is selected by setting DIP switch OFF, the selected model is displayed on the 5x7 display for 2 minutes. A power cycle is then required for the model configuration to be established in the PCM memory.

NOTE: Model configuration diagnostics will occur while the equipment is operating, but changes to a model configuration using a physical model plug will not affect equipment operation until power is cycled. An electronically set model configuration will take effect immediately. The PCM remembers the most recent valid model configuration detected at power-up, regardless of that configuration coming from an electronic or physical model plug. Model configuration memory is preserved across power cycles, so proper equipment operation will continue even if power to the equipment is lost and then restored. An installed model plug at power-up takes precedence over a model configuration value stored in memory. If a new valid model plug value is detected at power-up, the model configuration memory will be updated to that new value.

High Pressure Switch Protection

The outdoor unit is equipped with a high pressure switch. If the control senses the opening of a high pressure switch, it will respond as follows:

1. De-energize the VFD.
2. Display the appropriate fault code (See Table 10).
3. After discharge pressure drops below 425 PSIG, if there is a call for cooling or heating PCM and VFD will restart system.
4. High pressure switch trips do not escalate to a malfunction. Other system protections should reduce or stop unit operation before pressure switch opens.
5. Rapid increase of discharge pressure may not allow other system protections to take steps to reduce discharge pressure and may result in high pressure switch trip.

NOTE: Because the pressure switch is in the safety circuit that allows power to the VFD, a loose connection or cut wire on the pressure switch can present as a VFD Communication Error.

High Pressure Protection

The equipment monitors the discharge pressure relative to high pressure limits. High pressure limits are compressor speed and model dependent. If the control senses a high pressure, it will respond as follows:

- Increase outdoor fan speed and lower compressor speed to preempt a high pressure shutdown. Note: in cooling outdoor fan and compressor speeds are changed. In heating, suction superheat and compressor speeds are reduced.
- The control will attempt to compensate for exceeding high pressure limits. A shutdown will occur if the system is unable to bring pressure back below the desired limit. The control will shut the system down immediately if pressure exceeds 620 psig.
- If a high pressure shutdown occurs, a diagnostic code will be set to indicate the cause for shutdown.
- If high pressure shutdown occurs, the next operating cycle will operate at 25% less capacity. Each fault after that will reduce capacity by an additional 25%. Each hour of operation without a fault will increase the available capacity by 25%.
- If a high pressure fault occurs twice when system is operating at minimum capacity, the system will shut down with a 2 hour lockout.

In the event of a high pressure trip or high pressure lockout, check the refrigerant for an over charge. If the charge is found to be correct, check for outdoor coil blockage in cooling. In heating, check the indoor coil for blockage and indoor fan for proper operation.

Low Pressure Protection

The equipment monitors suction pressure relative to low pressure limits. Low pressure limits are compressor speed and model dependent. If the control senses a low pressure, it will respond as follows:

- Lower compressor speed and open EXV (heating only) to maintain suction pressure.
- The control will attempt to compensate for falling below the low pressure limit. A shutdown will occur if the system is unable to bring pressure back above the desired limit. The control will shut the system down immediately if pressure drops to 15 psig.
- If a low pressure shutdown occurs, a diagnostic code will be set to indicate the cause for shutdown.
- If a demand persists after the 5-minute compressor protection delay and the pressure has reached the operation level, then the system will resume operation.
- If a pressure drops below the instantaneous level four (4) times in 2 hours, then a 2 hour lockout will occur, and the system will display a malfunction code and communicate lockout status to the System Control.

In the event of a low pressure trip or low pressure lockout, check the refrigerant for an under charge. If the charge is found to be correct, check for low indoor airflow in cooling and the outdoor fan for proper operation in heating and outdoor coil in heating for airflow restrictions.

COMPONENT DIAGNOSTICS

Compressor

This compressor operates with a 3-phase variable frequency, variable voltage applied to the three fusite terminals. If compressor motor failure is suspected, check the phase resistances and the resistance between each phase and ground according to the parameters given in Table 5.

Table 5 – Variable Speed Compressor Resistances (ohm) (winding resistance at 68°F /20°C)

WINDING	Between T1, T2, and T3 (U,V,W)	Between terminal & ground
191VAN24	1.63	> 1 mega OHM
191VAN36	0.74	
191VAN48	0.46	
191VAN60	0.424	
290VAN24	1.63	
290VAN36	0.46	
290VAN48	0.424	
290VAN60	0.424	
291VAN054	0.424	
293VAN024	0.74	
293VAN036	0.453	
293VAN048	0.424	
293VAN060	0.424	
249VAN024	0.61	
249VAN036	0.61	
249VAN048	0.18	
249VAN060	0.18	

Fan

⚠ CAUTION

EQUIPMENT DAMAGE HAZARD

Failure to follow this caution may result in equipment damage or improper operation.

Do not use Meggar for measuring the winding resistance.

If verification of proper operation is required for the ECM motor used in this unit, refer to Fig. 17 and follow these steps:

1. Remove fan harness at VFD
2. Check the resistance between connector pins according to the expected resistances provided in Table 6.

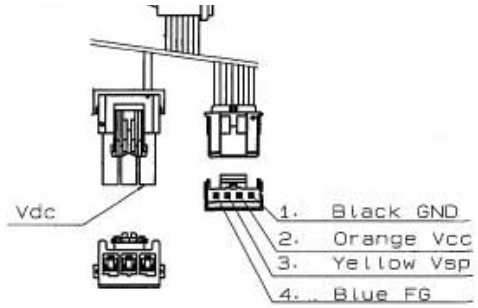

A200184

Fig. 17 – Fan Motor Connections

Table 6 – DC Voltage and PWM Measurement

Motor Part Number	Vdc-GND	Vcc-GND	Vsp-GND	FG-GND
	Pin 1 (3 pin) & Pin 1 (4 pin)	Pin 2 (4 pin) & Pin 1 (4 pin)	Pin 3 (4 pin) & Pin 1 (4 pin)	Pin 4 (4 pin) & Pin 1 (4 pin)
HA38CM230	1.04 meg OHM	62.1k OHM	216k OHM	Open
HA38CZ232	1.37 meg OHM	43.7k OHM	119k OHM	Open
HA42CM230	1.22 meg OHM	54.3k OHM	222k OHM	Open
HA42CZ236	1.30 meg OHM	45.9k OHM	119k OHM	Open
HA42CZ238	1.30 meg OHM	45.9k OHM	119k OHM	Open

Temperature Thermistors

Thermistors are used to sense the outdoor ambient (OAT), outdoor coil (OCT-HP), liquid line (LLT), any outdoor discharge (ODT) line temperatures. All thermistors are 10K thermistors except for the ODT, which is a 50k thermistor.

Refer to Table 7 and Table 8 for resistance values versus temperature for the OAT, OCT - HP, ODT, and LLT.

Table 7 – 10K Thermistor Resistance Values

TEMPERATURE	RESISTANCE (K OHMS)
25°C (77°F)	10.0 + / - 2.3%
0°C (32°F)	32.6 + / - 3.2%
-17.8°C (0 °F)	85.5 + / - 3.4%

Table 8 – 50K Thermistor Resistance Values

TEMPERATURE (°C)	RESISTANCE (K OHMS)
25	50.15 + / - 5.0%
75	7.565 + / - 3.0%
125	1.7 + / - 1.4%

If the outdoor air or coil thermistor should fail, the control will flash the appropriate fault code (see Table 10.)

IMPORTANT: The OAT, OCT/LLT, OST, and ODT thermistors should be factory mounted in the final locations. Check to ensure thermistors are mounted properly (See Fig. 18, Fig. 19 and Fig. 21).

Outdoor Air Temperature (OAT)

The OAT is a 10K thermistor that provides outdoor air temperature data to the primary control module for use in multiple system operations. On 191VAN and 290VAN, 291VAN, 293VAN models, it also provides outdoor air temperature data to the Evolution™ Connex™ System Control. It is essential for controlling the system and is used in almost all modes of operation. The sensor is mounted in the control box per Fig. 18. See Table 7 for proper resistances.

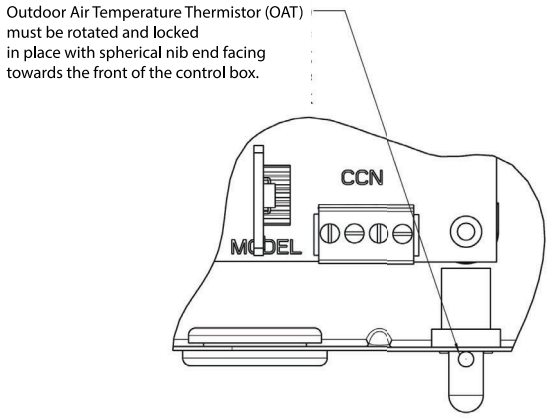

A230575

Fig. 18 – OAT Thermistor Mounting Location

WARNING

PERSONAL INJURY AND/OR PROPERTY DAMAGE HAZARD

Failure to follow this warning could result in personal injury and/or property damage.

The appliance shall be stored in a room without continuously operating ignition sources, for example:

open flames, an operating gas appliance or an operating electric heater.

Do not pierce or burn.

Be aware that refrigerants do not contain an odor.

Outdoor Coil Temperature (OCT)

HP Only

The OCT Thermistor is a 10K thermistor used for multiple system operations. This sensor is connected to the PCM through a shared 5-pin connector with OAT and provides the coil temperature to the primary control module and Evolution™ Connex™ System Control. It is used for low ambient operation, defrost control, and other system operations. The sensor must be securely mounted to the stub tube on the outdoor coil. Note that there is only one stub tube used and on most units it is the bottom circuit. See Fig. 19 for proper placement. See Table 7 for proper resistances.

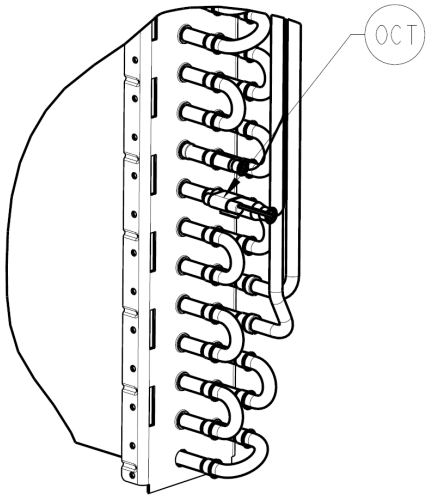

A260568

Fig. 19 – OCT Thermistor Mounting Location

Liquid Line Temperature (LLT)

The LLT is a 10K thermistor used for multiple system operations. LLT is connected to the PCM through a separate 3-pin connector and provides to the primary control module and Evolution™ Connex™ System Control. It is used for heating control and subcooling calculation during charging. The sensor must be securely mounted to the liquid tube behind the liquid service valve. See Fig. 20 for proper placement. See Table 7 for proper resistances.

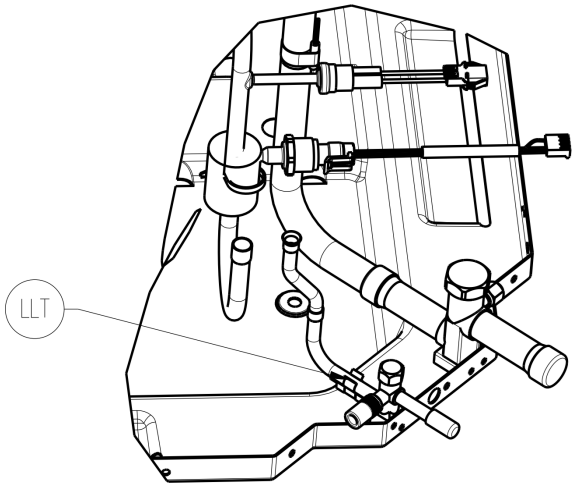

A260569

Fig. 20 – LLT Thermistor Mounting Location

Outdoor Suction Temperature (OST)

The OST is a 10K thermistor used for assisting in EXV control and must be secured on the suction tube and aligned longitudinally to the vertical surface of the tube axis (see Fig. 21). See Table 7 for proper resistances.

Outdoor Discharge Line Temperature (ODT)

The ODT is a 50k thermistor used for determining discharge superheat and protecting the compressor from over-temperature operation. Proper mounting is required to reduce the influence of ambient temperature and provide accurate tube temperature. ODT is located on the compressor discharge stub-out (see Fig. 21) and should be inside the compressor sound blanket. See Table 9 for proper resistances.

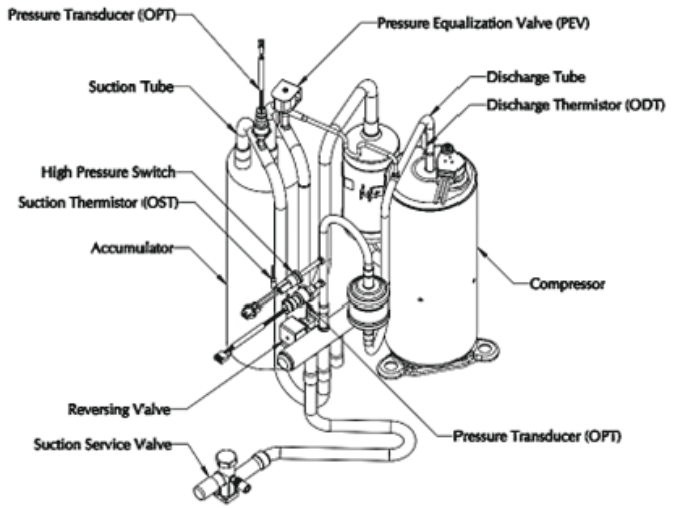

A230573

Fig. 21 – OST Thermistor and ODT Thermistor Mounting Locations

CAUTION

EQUIPMENT DAMAGE HAZARD

Failure to follow this caution may result in equipment damage and/or improper operation.

In order to minimize the ambient influence, make sure the thermistor curved surface hugs the pipe surface and is secured tight using the wire tie fished through the original slot, insulating polymer body.

Failed Thermistor Default Operation

Factory defaults have been provided in the event of failure of any of the thermistors.

If the OAT sensor fails, the outdoor unit will operate at a fixed speed. The value of OST will be substituted for OAT when running in heating, and the value of OCT will be reported when not running or running in cooling.

If the OCT sensor fails, defrost will occur at a 60 minute time interval and run for 10 minutes during heating operation. Saturated suction temperature will be substituted for OCT during heating operation, and discharge temperature will be substituted during cooling operation.

If the ODT sensor fails, the outdoor unit will operate at a fixed speed and a value of 47°F will be substituted.

If the OST sensor fails, the outdoor unit will not operate in heating, but will continue to operate in cooling. A value of 47°F will be substituted.

If the LLT sensor fails, subcooling calculation during charging mode will not be available.

Table 9 – Thermistor Resistance (k-ohms) vs. Temperature

Temp (°F)	OAT - OCT - OST - LLT	ODT
0	85	430
10	62	310
20	46	230
30	35	170
40	26	130
50	20	99
60	15	77
70	11.9	59
80	9.3	46
90	7.3	37
100	5.8	29
110	4.7	23
120	3.8	19

Pressure Sensors

The equipment contains two pressure transducers:

- Suction Pressure Transducer (SPT)
- Discharge Pressure Transducer (DPT)

The two transducers are identical parts installed on the suction inlet to the compressor and discharge outlet of the compressor respectively. The transducers have a sensing range of 0 to 620 psig. The connection points to the PCM are labeled P1 and P2. These two connection points are identical. Either pressure transducer can connected to either input. The software in the PCM detects which transducer is connected to which input and assigns the signals accordingly.

Signals used by control board for:

- Low pressure cut-out
- Loss of charge management
- Compressor reliability management
- Discharge pressure cut-out
- Suction and Discharge super heat calculations

If the accuracy of either transducer is questioned, it can be checked while attached to the PCM. Connect a gauge manifold to the appropriate gauge port fitting and compare the gauge reading with the pressure reported by the PCM to the Evolution™ Connex™ System Control (191VAN/290VAN,291VAN,293VAN only) or to the Bryant Service Tech App. The connections at the PCM should be swapped to ensure the discrepancy is not related to PCM translation of transducer input signal. If suspect pressure measurement error follows transducer when connections are switched, replace transducer. If the suspect pressure measurement error changes to the other transducer when the connections are switched, replace the PCM.

Electronic Expansion Valves (EXV)

While the EXV-H and EXV-VI valve bodies are different for different models, the stator for all valves have the same electrical properties. The EXV coil resistance should fall between 43 and 49 ohms when measured from common to remaining terminals. See Fig. 23 and Fig. 24.

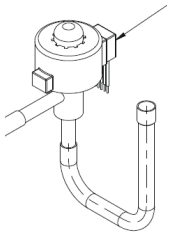

A200182

Fig. 22 – Electronic Expansion Valve (EXV)

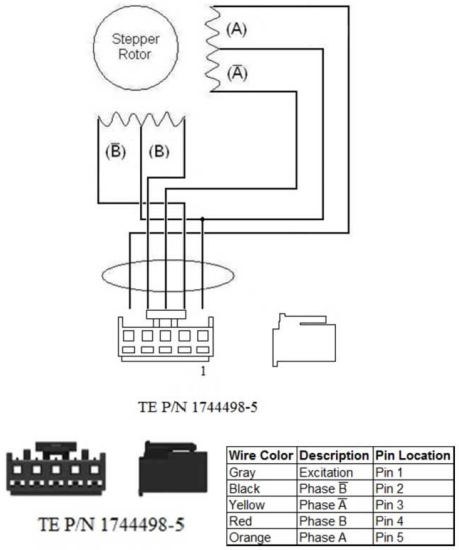

Wire Color	Description	Pin Location
Gray	Excitation	Pin 1
Black	Phase B̄	Pin 2
Yellow	Phase Ā	Pin 3
Red	Phase B	Pin 4
Orange	Phase A	Pin 5

A200215

Fig. 23 – EXV 5-wire Harness Heating EXV

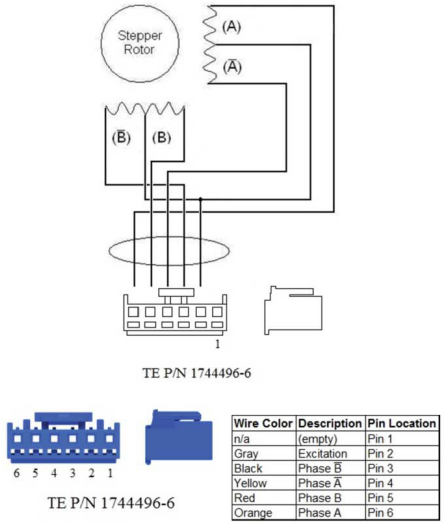

Wire Color	Description	Pin Location
n/a	(empty)	Pin 1
Gray	Excitation	Pin 2
Black	Phase B̄	Pin 3
Yellow	Phase Ā	Pin 4
Red	Phase B	Pin 5
Orange	Phase A	Pin 6

A200216

Fig. 24 – EXV 6-wire Harness Vapor Injection EXV

DIAGNOSTIC CODES AND TROUBLESHOOTING

Code 13-82 System Control Upgrade Recommended

Code 13-53 System Control Upgrade Required

Code 13-82 indicates that the system control is out of date and should be upgraded to take full advantage of the features and functionality of the equipment system.

Code 13-53 indicates that the system control is sufficiently out of date that the equipment will NOT operate. The system control must be updated.

To correct codes 13-82 or 13-53, upgrade the system control to the latest version available.

Code 14-94 Line Voltage Low

Low line voltage may result in increased electronic component temperatures and shorten the life of VFD. Since control voltage is based on line voltage, solenoids and relays may not pull in and hold correctly as well. “Line Voltage Low” fault is set when incoming line voltage drops below 180V AC RMS at any time, or when line voltage drops below 185V AC RMS for more than 5 seconds. Once line voltage increases above 187V, the fault will clear. While fault is active unit will not operate or will shut down if already running. This fault does not escalate to a malfunction.

On 191VAN/290VAN,291VAN,293VAN models, this measurement is taken at the secondary side of the 24VAC transformer and a scaler value applied at the factory to correct for transformer variation. On 249VAN models the VFD measures the line voltage directly.

Technician should first measure incoming line voltage at terminal block. Second, check tightness of all line voltage connections. Loose connections can cause excessive voltage drop and trigger this fault. If all connections are tight and line voltage is still low, additional steps involving the local power utility or addition of external power conditioner may be required.

Code 15-94 Line Voltage High

High line voltage may result in increased stress on electronic components and shorten the life of VFD. “Line Voltage High” fault is set when incoming line voltage rises above 285V AC RMS at any time, or when line voltage rises above 280V AC RMS for more than 5 seconds. Once line voltage drops below these thresholds the fault will clear. While fault is active unit will not operate or will shut down if already running. This fault does not escalate to a malfunction.

On 191VAN/290VAN,291VAN,293VAN models, this measurement is taken at the secondary side of the 24VAC transformer and a scaler value applied at the factory to correct for transformer variation. On 249VAN models, the VFD measures the line voltage directly.

Code 18-11 Indoor Coil Freeze Protection

Code 18-11 indicates that the equipment is reducing compressor speed compared to the requested capacity demand in an effort to prevent ice accumulation on the indoor coil. The PCM monitors the saturated suction temperature at the compressor, and when the saturation temperature approaches freezing, the compressor speed is reduced until the saturated suction temperature is raised. Prior to reducing compressor speed, the equipment will first attempt to increase indoor airflow, if possible. If the airflow increase and compressor speed reduction are not able to achieve a saturated suction temperature above 32°F then it will continue to operate until either demand is removed or a 32-15 (Compressor Low Pressure Limit) occurs.

Code 18-11 can be caused by insufficient airflow across the indoor coil due to a dirty filter or restrictive ductwork. Code 18-11 can also be caused by insufficient refrigerant charge in the system. Check the indoor equipment for excessive static air pressure and check refrigerant charge levels to correct this fault.

Code 19-06 Lost PLC Communications with TSTAT

The 249VAN models are capable of communicating with select thermostats that utilize Power Line Communication (PLC) for enhanced features. By default the OD unit does not display PLC communication faults in order to eliminate nuisance faults on systems that don't have PLC capable thermostats. For systems installed with PLC capable thermostats, changing DIP switch #3 to HIGH will allow the OD unit to display any communication faults between the OD and the thermostat.

If communication between the OD unit and the PLC capable thermostat is lost for more than 2 minutes, enhanced control reverts to traditional 24VAC control and this fault code is set. The system will continue to run and satisfy cooling and heating demands with 24VAC controls. Once communication resumes between the OD unit and the thermostat, enhanced control will resume.

NOTE: If PLC communication is a persistent problem, the 24VAC control wiring can be shielded by use of Accessory EMI chokes. Refer to unit Product Data for compatible Accessory Choke Kits.

Code 21-06 Lost PLC Communications with IDU

The 249VAN models are capable of communicating with select indoor units that utilize Power Line Communication (PLC) for enhanced features. By default the OD unit does not display PLC communication faults in order to eliminate nuisance faults on systems that don't have PLC capable indoor units. For systems installed with PLC capable IDs, changing DIP switch #4 to HIGH will allow the OD unit to display any communication faults between the OD and ID units.

If communication between the OD unit and the PLC capable indoor is lost for more than 2 minutes, enhanced control reverts to traditional 24VAC control and this fault code is set. The system will continue to run and satisfy cooling and heating demands with 24VAC controls. Once communication resumes between the OD and ID units, enhanced control will resume.

NOTE: If PLC communication is a persistent problem, the 24VAC control wiring can be shielded by use of Accessory EMI chokes. Refer to unit Product Data for compatible Accessory Choke Kits.

Code 24-58 5V PCM Power Out of Range Lockout

The PCM supplies 5V DC to the VFD either directly through the circuit board (249VAN) or through the communication harness to the power low voltage ICs (pin 4 of 6 pin wire harness). If this voltage is interrupted the VFD will cease to communicate with the PCM. The PCM will continue to operate for a short period of time in case this interruption is intermittent, but if the voltage is not restored the system will shut down and declare code 24-58. The fault will clear once 5V DC is restored to the VFD. The 5V DC from the PCM is also shared with the 5V DC power pressure transducers.

191VAN/290VAN,291VAN,293VAN Models

When code 24-58 is active, disconnect PCM to VFD communication harness and measure voltage between pins 3 (GND) and pin 4 (+5V DC) at the VFD connection end. If voltage is present, reconnect harness, power cycle, and check if fault is still present. If so, VFD will require replacement. If voltage is not present at VFD end of harness, check for voltage at the PCM header. If voltage is not present there, disconnect all other sensors from PCM until fault is cleared. Whichever sensor is disconnected that makes fault disappear should be inspected for damage, likely a short exists in the harness. Once all sensors are disconnected and fault is present, confirm - 5VDC is not present on PCM board; if not then replace PCM.

249VAN Models

When code 24-58 is active disconnect all other sensors from PCM until fault is cleared. Whichever sensor is disconnected that makes fault disappear should be inspected for damage, likely a short exists in the harness. Once all sensors are disconnected and fault is present, then replace PCM.

Code 25-24 Model Configuration Changed

Code 25-24 indicates that there is a mismatch in the model configuration stored in memory and the physical model plug presently installed. Code 25-24 will be set when the equipment is powered up with a valid physical model plug value that is different from the valid stored model configuration value in memory. Code 25-24 can also be set when there is an invalid physical model plug installed and a valid model configuration stored in memory. A changed model configuration will affect control configuration only if a physical model plug was present when power was applied to the equipment or the model configuration was set electronically. Code 25-24 will be set if a physical model plug is changed to a different valid value or an invalid value while power is applied to the unit. If the physical model plug change is intentional, then no corrective action is required. Leave the new model plug in place and the code will clear on its own when power is removed and reapplied to the equipment. If the model plug change is not intentional, then remove power from the equipment, install the correct model plug, and reapply power to the equipment. Alternatively the physical plug could be removed and the model configuration be set electronically via the Evolution™ Connex™ System Control, Service Tech App, or DIP switches.

Code 25-61 Invalid Model Plug Lockout

Each system requires a valid model configuration to be stored in PCM memory prior to system operation. The model configuration can be set by use of a physical plug that consists of two resistors in a unique combination, or it can be set by an electronic model plug that correlates to a specific configuration value. Refer to Table 4 in the Troubleshooting section under System Diagnostics and Equipment Configuration for the cross reference of unit model and model configuration values. The model plug identifies the system size and type so PCM software can apply the relevant operating limits and reference correct operating tables. Code 25-61 designates the currently stored model configuration is not valid and does not match any possible model in variable speed software. While Code 25-61 is active, the unit will not be operable.

Code 25-62 Model Configuration Missing Lockout

The Model Configuration Missing Malfunction indicates that a valid physical model plug was not present when the equipment was powered up and there is no valid model configuration value stored in PCM memory. A Clear Electronic Model Plug Command while no physical plug is installed will also result in a Code 25-62. If a Code 25-62 is active, the equipment will not operate. The PCM will not acknowledge a new physical model plug installation while power is applied to the equipment. The Model Configuration Missing Malfunction will clear by power-down of the equipment OR when a model plug is selected electronically. If the condition persists at the beginning of the next power cycle, the diagnostic will set again.

Code 25-63 VFD System Lockout - Model Mismatch

This code is generated when the model configuration is recognized but not compatible with the installed VFD. On the PCM, set DIP switch #4 (191VAN/290VAN,291VAN,293VAN) or DIP switch #2 (249VAN) ON and observe the PCM models that scroll across the PCM display. These are the valid PCM models that correlate to the detected VFD. Refer to Table 4 in the Troubleshooting section under System Diagnostics and Equipment Configuration for the cross reference of unit model and PCM Model values. If the available PCM Models do not correspond to the expected unit model, check and install the correct VFD and then set the model configuration again using the Evolution Connex™ System Control (191VAN/290VAN,291VAN,293VAN only), Service Tech App, or DIP switches.

Code 26-26 PCM MCU Old Version A

This fault is set when the PCM micro controller on installed board is recognized as old. This board should not be used in the field and should be returned to Bryant for warranty replacement.

Code 26-27 PCM Reprogramming Failure

Code 26-27 indicates that an attempt for the PCM to reprogram itself failed. If this diagnostic is not recent, then a subsequent reprogramming attempt may have succeeded. The technician should check the current PCM software version against the latest software release. If the PCM software is not the most current, then the PCM should be reprogrammed manually using the Evolution™ Connex™ System Control or the Bryant Service Tech App for 191VAN/290VAN/291VAN/293VAN/ models, or using the USB port for 249VAN models.

Code 26-31 External EEPROM Write Failure

The PCM stores equipment configuration information in non-volatile EEPROM memory. An active Code 26-31 can be corrected only by replacing the PCM.

Code 28-71 Fuse 1 Open Lockout

This code will be set if fuse 1 is blown or missing on PCM board. Fuse 1 Powers RVS, PEV (if present). When fuse 1 is open none of these components will function.

AC units will operate if pressure differential is below the maximum allowable starting threshold (100psi), but HP units will not operate at all. The code will clear once short is removed and fuse is replaced with new, undamaged part. If fuse is blown there is a likely short in either the PEV or RVS harnesses. If no physical damage is observed, begin by unplugging all components from PCM and make connections until replacement fuse opens. Harness should be repaired before replacing fuse. See wiring diagram for fuse size and location

Code 28-72 Fuse 2 Open Lockout

This code will be set if fuse 2 is blown or missing on PCM board. Fuse 2 only powers the LLS. When this fault is active the system will not operate. The code will clear once fuse is replaced with new, undamaged part. LLS are field installed accessories. Check LLS wiring for shorts. See wiring diagram for fuse size and location.

Code 28-73 VFD 15V Shorted to Ground Lockout (249VAN Only)

This code will be set when the VFD detects lower than expected voltage on the fan motor communication wires. This can be caused by a short in the fan motor harness, a damaged motor, or a damaged VFD.

To verify the source of the malfunction, disconnect OD fan motor from the VFD and verify the resistance between the pins on the harness. The expected resistance values can be found on Table 5 for each motor. If the resistances don't match the table and the harness looks intact, replace the fan motor. If the resistances indicate the motor is good, replace the VFD.

Code 31-11 Compressor High Pressure Limiting

Code 31-58 Compressor High Pressure Lockout

This system contains a discharge pressure transducer to ensure compressor reliability. The high pressure limit is based on compressor model and varies with operating speed. When this fault occurs, the system will shut down and restart after 5 minute compressor protection time delay if demand is still present. Each time the fault occurs the maximum allowable compressor speed will be reduced by 25% until the minimum allowable compressor speed is reached. Each hour of compressor operation without fault re-occurrence will increase the compressor speed limit by 25%. This ensures that partial operation is still possible and system will self-correct if the issue causing fault is removed. Code 31-58 occurs when the compressor high pressure limit is reached while the compressor is at its minimum operating speed. System will “lock out” for 2 hours and attempt to resume normal operation afterwards. Multiple external factors may generate this fault: Dirty condenser, lack of airflow across condenser, condenser airflow recirculation, extreme high temperature and sun loading, refrigerant circuit blockage, faulty EXV/TXV, or overcharge.

Code 31-16 High Pressure Switch Shutdown

This system contains a 670psi high pressure switch as well as a discharge pressure transducer. This fault should not occur as the pressure transducer utilizes a separate high pressure limit at a lower setting. In the case of a fast transient this switch will safely disable system operation.

This switch is connected directly to VFD and a break or short in wire harness during high pressure events will also generate fault. The high pressure switch quickly shuts down high voltage to VFD and additional communication faults may occur since the VFD will cease to communicate with PCM. The PCM/VFD will not attempt to resume system operation until discharge pressure has dropped below 425PSIG. Ensure HPS is closed and securely connected to VFD.

Three instances of a code 31-16 will result in a 2 hour lockout.

Code 31-19 High Pressure Disable

This fault is triggered when the discharge pressure is too high to start compressor (620psig). If refrigerant saturated pressure is high enough the system will be inoperable until pressures drops to acceptable range. Extreme high ambient temperatures may cause this fault to set and system will be inoperable during this time.

Code 31-56 High Pressure Switch Lockout

This system contains a 670psi high pressure switch as well as a discharge pressure transducer. This fault should not occur as the pressure transducer utilizes a separate high pressure limit at a lower setting. In the case of a fast transient this switch will safely disable system operation. This switch is connected directly to VFD and a break or short in wire harness during high pressure events will also generate fault. The high pressure switch quickly shuts down high voltage to VFD and additional communication faults may occur since the VFD will cease to communicate with PCM. The PCM/VFD will not attempt to resume system operation until discharge pressure has dropped below 425PSIG. Ensure HPS is closed and securely connected to VFD.

Code 32-15 Compressor Low Suction Shutdown

Code 32-55 Compressor Low Suction Lockout

Exceeding soft and hard low pressure limits result in code 32-15. The soft low pressure limit can be exceeded for up to 2 minutes before code is generated, while exceeding the hard limit immediately results in code 32-15. Low pressure limits are compressor and rpm dependent, but 30psi and 15psi are typical. 4 occurrences of code 32-15 result in a 2-hour lockout. Note: AEM will attempt to mitigate low pressure by adjusting system operation. This fault will only be set if system operation cannot be modified quickly enough to prevent exceeding hard and soft limits. A single occurrence of fault will result in 5-minute time delay followed by attempted restart if demand is still present.

Low pressure conditions can occur from multiple causes: Blockage in liquid line, stuck TXV or EXV, no airflow across evaporator, low system charge. Low ambient temperatures will increase diagnostic sensitivity to contributing factors above. Check pressure drop of liquid line at condenser and evaporator, confirm airflow across evaporator, and confirm system charge is correct. Replace EXV/TXV if necessary.

Code 32-59 Low Pressure Lockout

This fault is triggered when the suction pressure is too low to safely start the compressor. If refrigerant saturated pressure is low enough the system will be inoperable until pressures increase to acceptable range. System will be inoperable while this fault is active. The most likely cause of this fault is a leak in the refrigeration system.

Code 33-15 Compressor Low Discharge Shutdown

Code 33-55 Compressor Low Discharge Lockout

(293VAN060 and 291VAN054 Only)

Code 33-15 will become active if compressor is running and discharge pressure is below the lower safe operating boundary for a period of time. Active envelope management will attempt to modify system operation to correct this condition before fault is set, but once time limit beyond the limit is exceeded the system will shutdown. 6 occurrences of code 33-15 within 2 hours will result in code 33-55 and 2 hour lockout.

Low discharge pressure can be caused by malfunctioning reversing valve, low charge, missing or stuck TXV/EXV, or compressor not operating properly.

Code 34-11 Compressor High Temp Limiting

Code 34-58 Compressor High Temp Lockout

Code 34-11 will be set when discharge temperature exceeds 235°F measured near the compressor. Low charge or very high superheat are contributors to this fault condition. For each occurrence of 34-11, the next startup will operate at a 25% reduction in capacity. Each hour of operation without additional faults will allow system to increase available capacity by 25%. Once the system is running at minimum capacity and discharge temperature exceeds 235°F, code 34-58 will occur and shut down system for 2 hours.

Code 35-11 Compressor High Compression Limiting

Code 35-58 Compressor High Compression Lockout

Code 35-11 occurs when the high compression boundary is crossed and AEM cannot adjust system operation to reduce compression ratio. For each occurrence of 35-11, the next startup will operate at a 25% reduction in capacity. Each hour of operation without additional faults will allow system to increase available capacity by 25%. Once the system is running at minimum capacity and the high compression boundary is crossed, code 35-58 will occur and shut down system for 2 hours. High compression ratio can be the result of overcharge or coil blockage/loss of airflow across heat exchanger.

Code 36-15 Compressor Low Compress Shutdown

Code 36-55 Compressor Low Compression Lockout

Code 36-15 occurs when the low compression boundary is crossed and AEM cannot adjust system operation to increase compression ratio. Before this fault is set, AEM will automatically reduce outdoor fan speed (cooling only) to increase CR, then increase compressor speed. 4 occurrences of code 36-15 within 2 hours will result in code 36-55 and 2 hour lockout. Low compression ratio can be a result of compressor not increasing pressure adequately or low system charge.

Code 38-13 VFD Compressor Fault - Start Fail

Code 38-53 VFD Compressor Lockout - Start Fail

Code 38-13 originates in VFD after additional compressor starting failures. While this code is active the unit opens PEV (if present) in an attempt to equalize pressure across compressor and continue start retries. After 3 consecutive code 38-13, malfunction 38-53 will be set with a 2 hour lockout.

Check compressor wiring for secure connections, wire damage, and wire order. This code indicates that the VFD is not able to rotate the compressor rotor enough to complete starting process, indicating compressor damage or high pressure differential. If malfunctions continue to be generated and technician confirms pressure differential across compressor is <40psi, replace compressor.

Code 38-14 Compressor Disconnect

Code 38-55 Compressor Physical Malfunction

(249VAN Only)

Code 38-14 will set when the VFD detects a loss of phase in one of the compressor windings. This can be caused by a loose compressor plug connection if it is an intermittent issue. 3 occurrences of code 38-14 in 1 hour will result in a 4 hour lockout and generate a code 38-55. Inspect the compressor plug harness for any damage and verify continuity between the VFD side and the compressor side of the harness. If the harness appears undamaged, check the compressor windings against the expected resistance on Table 5.

If compressor or compressor plug harness are damaged, replace them. Otherwise the VFD should be replaced.

Code 38-18 High Diff Pressure Start Disable

Attempting to start the compressor against a high pressure differential may result in start failures with an otherwise healthy compressor. On 191VAN/290VAN,291VAN,293VAN models a PEV is included to ensure compressor will never start against a high pressure differential. 249VAN products are designed with longer cycle off-times to reduce the pressure differential to an acceptable level without the use of a PEV. This fault will become active if a demand exists and the pressure differential is not below 100 psi. The fault will clear and unit will start normally once pressure differential is below 100 psi and demand is still present.

On 191VAN/290VAN,291VAN,293VAN models the most likely cause of this fault is a non-functioning PEV. Possibly the PEV suffered a mechanical failure, or the coil is not mounted to PEV. Verify PEV coil is attached to PEV valve body. If coil is attached, replace PEV harness and coil first, and PEV body if problem is not fixed.

On 249VAN models the system will startup regardless of pressure differential if it's been 20 minutes and there's a call from the thermostat.

Code 38-31 VFD Compressor Fault - Estimator

Code 38-71 VFD Compressor Lockout - Estimator

The VFD Estimator is used in the compressor starting process. While this fault is active the PEV will open and compressor will continue attempts at restarting. Three continuous code 38-31 will result in code 38-71 malfunction and 2 or 4 hour lockout. Repeated malfunctions indicate high starting torque and possible compressor damage. First, ensure the VFD model and compressor models are correct for unit being serviced as incorrect compressor motor parameters will not allow the VFD to complete the starting process correctly. If all parts are correct for the model being serviced, compressor damage exists and should be replaced.

Code 38-54 Compressor No Pump Lockout

This diagnostic checks to ensure the compressor is running in the correct direction and pumping properly. Once the compressor speed is >400rpm, the compressor has up to 30 seconds to increase the pressure differential (discharge pressure - suction pressure) by 20psi. If this pressure differential is not met, code 38-54 sets by locking operation for 30 minutes.

The most likely cause of this fault is the compressor leads being wired incorrectly. Check wire colors against wiring diagram to ensure UVW wires are attached to the correct terminals. Less likely but still possible is compressor motor shaft breakage allowing compressor motor to rotate but is disconnected from compression mechanism.

Fan Motor Faults General Info

The fan motor used on these models require 5 wires. 240~373 VDC is supplied through Pin 1 of 3 pin connector (VDC) and Pin 1 of 4 pin connector (GND). Pin 2 of 4 pin connector is Vcc signal for IC power supply (~15Vdc). Pin 3 of 4 pin connector is Vsp signal, which is 0-5VDC input speed control. Pin 4 of 4 pin is FG or feedback signal, sending rpm information back to VFD. The motor is controlled using a closed loop control where variable speed is increased or decreased by VFD depending on the RPM command from PCM to VFD along with actual RPM information read through FG pin. Use Table 6 to confirm damaged electronics within fan motor. Note - winding resistance cannot be measured on fan motor due to embedded electronics. Note - resistances are approximate, temperature may affect measurements so only declare motor bad if results differ greatly from values in Table 6 . Though the fan motor has internal current protection, an external replaceable fuse is located on VFD for short circuit protection. See wiring diagram for fuse replacement specifications.

Code 39-13 Fan Start Failure

Code 39-53 Fan Start Failure Lockout

When a demand startup begins a fan speed is commanded to VFD. After 25 seconds of FG (fan speed feedback signal) = 0, the PCM will reset the VFD and try to start fan again. After 3 VFD resets Code 39-13 will be set. PCM will continue to reset VFD a total of 6 times before declaring code 39-53 and locking out for 1 hour. A successful fan start will reset the fan start failed counter.

Inspect all wiring and connectors for damage and loose connections. Check for fan blade blockage and free spin. Check external fan fuse. If no physical blockage is present and fuse is not open, ohm the motor and replace if necessary.

Code 39-14 Fan Speed Error

A code 39-14 is declared when the commanded speed is greater than 200rpm and differs from actual speed (as reported from fan to VFD) by more than 20%. This fault is also declared when the commanded speed is 0 and the VFD is receiving greater than 80rpm feedback from fan motor. The most likely scenario for this fault is a partial physical blockage of blade, ice buildup on fan blade, extreme coil blockage that loads blade heavily, or bearings with high resistance to spinning.

Code 39-15 Unexpected Fan Shutdown

Code 39-55 Unexpected Fan Lockout

A code 39-15 is declared when VFD commanded speed is above 200rpm and actual speed is reduced to less than 80rpm as reported via VFD for 10 seconds consecutively after starting. The fault triggers compressor and fan shutdown, then VFD reset. If demand is still present the system will attempt to restart normally and run. An intermittent open connection on fan FG wire or a failing fan motor may create these faults.

Code 39-58 VFD System Lockout - Fan Motor Fail

Code 39-58 originates in the VFD control when fan motor feedback signal (FG) is not received while a Vsp value has been sent to fan motor for 30 seconds. The fault can also be set when speed error between feedback and command is greater than 100rpm. This fault should never occur because code 39-15 will be declared after 10 seconds. When fault is active, compressor and fan are shut down and lockout time is 30 minutes. Internal electrical damage is likely causing FG feedback to not be received by VFD. Replace fan motor 1st, then VFD.

Code 41-13 Defrost Timeout

This system operates using both a time and temperature requirement. After a predetermined length of time at a possible coil frosting condition (OCT below 35F) defrost will be initiated. OCT is monitored and will complete defrost cycle once it reaches a target value dependent on model and OAT value. Code 41-13 is triggered when defrost is terminated on maximum time and the target coil temperature has not been reached. This may indicate an extreme amount of ice formed on coil or the OCT sensor not being securely attached to butterfly tube. This fault may also trigger if high winds are present and are cooling the coil, not allowing heat to build and melt frost or ice.

Code 44-13 PEV Timeout

191VAN/290VAN/291VAN/293VAN Models

The PEV is used to equalize suction and discharge pressures and lessen the starting torque required from compressor and VFD. The PEV will open 2.5 minutes after compressor shutdown if pressure differential is between 200-300psi or if pressure differential is greater than 50psi and demand is present. In both cases PEV will open until differential pressure is less than 40psi. Code 44-13 will be set if PEV is open for 10 minutes and does not reduce pressure differential below 40psi. If this occurs it is likely the valve or coil has failed. Replace PEV coil and harness first and if fault persists open refrigeration system and replace PEV valve itself. This fault will not prevent system from starting, but will likely be accompanied by another fault.

Code 45-14/15/16 Power Curtailment (249VAN Only)

All code 45 events are indications that the thermostat has received a request for power curtailment from the utility. Code 45-14 is a General Power Curtailment Event that results in approximately a 30% reduction in capacity available to the system. Code 45-15 is a Critical Power Curtailment Event that results in approximately a 50% reduction in capacity available to the system. Code 45-16 is an Off Mode Power Curtailment Event that results in the system remaining off.

Code 51-01 OAT Open

The outdoor air thermistor determines operating range of compressor and fan speeds in cooling and heating operating modes. When "OAT Open" fault is active, the OCT will be substituted in its place and compressor operating speed will be limited to 2700rpm. Fan speeds will be limited based on OCT value. The sensor is monitored continuously and if resistance is above 465kohm for 1 second this fault will occur. Once sensor value drops below 465kohm for 1 second the fault will clear. This fault does not escalate to a malfunction.

If the resistance value of OAT thermistor is higher than the electrical circuit is capable of measuring, this fault will be generated. Measure resistance value of thermistor at the PCM connector. If value is above 465kohm, look for a break in the wiring or at the connector itself. If no breaks are observed, replace sensor. If measured resistance is within allowable range, replace PCM.

Code 51-02 OAT Shorted

The outdoor air thermistor determines operating range of compressor and fan speeds in cooling and heating operating modes. When "OAT Shorted" fault is active the OCT value will be substituted in its place, and compressor operating speed will be limited to 2700rpm. Fan speeds will be limited based on OCT value. The sensor is monitored continuously and if resistance is below 1kohm for 1 second this fault will occur. Once sensor value increases above 1kohm for 1 second the fault will clear. This fault does not escalate to a malfunction.

If the resistance value of OAT thermistor is lower than the electrical circuit is capable of measuring, this fault will be generated. Measure resistance value of thermistor at the PCM connector. If value is below 1kohm, look for bare wire, short in the wiring, or at the connector itself. If no bare wires or shorts are observed, replace sensor. If measured resistance is within allowable range, replace PCM.

Code 51-43 OAT Not Valid (249VAN Only)

The outdoor air thermistor determines operating range of compressor and fan speeds in cooling and heating operating modes in conjunction with the OCT sensor. So if the OAT sensor is open or shorted AND the OCT thermistor is also open or shorted, the system cannot safely run and will shut down. Once the OAT and OCT thermistors are fixed the system will operate normally.

Code 52-01 OCT / LLT Open (AC)

The outdoor coil thermistor is used to determine when the outdoor coil is completely cleared during defrost. For this reason all defrosts performed when this fault is active will occur for the maximum time length allowed by software. The sensor is monitored continuously and if resistance is above 465kohm for 1 second this fault will occur. Once sensor value drops below 465kohm for 1 second the fault will clear. This fault does not escalate to a malfunction.

Measure resistance value of thermistor at the PCM connector. If value is above 465kohm, look for a break in the wiring or at the connector itself. If no breaks are observed, replace sensor. If measured resistance is within allowable range, replace PCM.

*Note if any combination of OAT and OCT shorted/open are present the system will limit operation based on each individual fault.

In AC systems, this thermistor is labeled as LLT. This thermistor is used for charging and subcooling calculation. A faulted LLT will make subcooling calculation unavailable in charge mode. OCT (HP) or LLT Open (AC) connect to the PCM through a shared 5-pin connector with OAT.

Code 52-02 OCT Shorted (HP) / LLT Shorted (AC)

The outdoor coil thermistor is used to determine when the outdoor coil is completely cleared during defrost. For this reason all defrosts performed when this fault is active will occur for the maximum time length allowed by software. The sensor is monitored continuously and if resistance is below 1kohm for 1 second this fault will occur. Once sensor value increases above 1kohm for 1 second the fault will clear. This fault does not escalate to a malfunction.

Measure resistance value of thermistor at the PCM connector. If value is below 1kohm, look for a short in the wiring or at the connector itself. If no shorts are observed, replace sensor. If measured resistance is within allowable range, replace PCM.

*Note if any combination of OAT and OCT shorted/open are present the system will limit operation based on each individual fault.

In AC systems, this thermistor is labeled as LLT. This thermistor is used for charging and subcooling calculation. A faulted LLT will make subcooling calculation unavailable in charge mode.

Code 52-03 LLT Sensor Open (249VAN Only)

The liquid line thermistor is only used for charging and subcooling calculation and not required for any other critical system operation. A faulted LLT will make subcooling calculation unavailable in charge mode.

If the resistance value of LLT thermistor is higher than the electrical circuit is capable of measuring, this fault will be generated. Measure resistance value of thermistor at the PCM connector. If value is above 465kohm, look for a break in the wiring or at the connector itself. If no breaks are observed, replace sensor. If measured resistance is within allowable range, replacing the PCM-VFD is necessary to eliminate this code.

Code 52-04 LLT Sensor Shorted (249VAN Only)

The liquid line thermistor is only used for charging and subcooling calculation and not required for any other critical system operation. A faulted LLT will make subcooling calculation unavailable in charge mode.

If the resistance value of LLT thermistor is lower than the electrical circuit is capable of measuring, this fault will be generated. Measure resistance value of thermistor at the PCM connector. If value is above 1kohm, look for bare wire, short in the wiring, or at the connector itself. If no bare wires or shorts are observed, replace sensor. If measured resistance is within allowable range, replacing the PCM-VFD is necessary to eliminate this code.

Code 53-41 OST Open - Backup Heat Only

The suction thermistor is required for control of the outdoor EXV in HP systems. For this reason, heating mode operation will be locked out if the OST is determined to be open or shorted. Cooling operation will be allowed if OST is not functional, though on HP systems the malfunction will be displayed on wall control screen (**191VAN/290VAN,291VAN,293VAN** Models only)**.**

This will remind homeowner to repair the sensor before heating season. Open OST sensor value will default to "47" on status or checkout display. The sensor is monitored continuously and if resistance is above 465kohm for 1 second this fault will occur. Once sensor value drops below 465kohm for 1 second the fault will clear.

Measure resistance value of thermistor at the PCM connector. If value is above 465kohm, look for a break in the wiring or at the connector itself. If no breaks are observed, replace sensor. If measured resistance is within allowable range, replace PCM.

Code 53-42 OST Shorted - Backup Heat Only

The suction thermistor is required for control of the outdoor EXV in HP systems. Similar to "OST Open" fault, heating mode operation will be locked out if the OST is determined to be open or shorted. Cooling operation will be allowed if OST is not functional, though on HP systems the malfunction will be displayed on wall control screen (**191VAN/290VAN,291VAN,293VAN**). This will remind homeowner to repair the sensor before heating season. Shorted OST sensor value will default to "47" on status or checkout display. The sensor is monitored continuously and if resistance is below 1kohm for 1 second this fault will occur. Once sensor value rises above 1kohm for 1 second the fault will clear.

Measure resistance value of thermistor at the PCM connector. If value is below 1kohm, look for bare wire, short in the wiring, or at the connector itself. If no bare wires or shorts are observed, replace sensor. If measured resistance is within allowable range, replace PCM.

Code 54-01 ODT Open

The discharge thermistor is used to protect the compressor and ensure discharge superheat is present at all times. When "ODT Open" malfunction is active 47 will be substituted by default. The sensor is monitored continuously and if resistance is above 310kohm for 1 second this malfunction will occur. Once sensor value drops below 310kohm for 1 second the malfunction will clear. Since achieving discharge superheat is an integral requirement for startup, when this sensor does not read a valid value, the system will only run at startup speed. Normal operation will resume once valid ODT value is read by PCM.

Measure resistance value of thermistor at the PCM connector. If value is above 310kohm, and OAT and OCT measure above 25F, look for a break in the wiring or at the connector itself. If no breaks are observed, replace sensor. If measured resistance is within allowable range, replace PCM.

Code 54-02 ODT Shorted

The discharge thermistor is used to protect the compressor and ensure discharge superheat is present at all times. When "ODT Shorted" malfunction is active 47 will be substituted by default. The sensor is monitored continuously and if resistance is below 670 ohm for 1 second this malfunction will occur. Once sensor value rises above 670 ohm for 1 second the malfunction will clear. Since achieving discharge superheat is an integral requirement for startup, when this sensor does not read a valid value, the system will only run at startup speed. Normal operation will resume once valid ODT value is read by PCM.

Measure resistance value of thermistor at the PCM connector. If value is below 670 ohm, look for a short in the wiring or at the connector itself. If no shorts are observed, replace sensor. If measured resistance is within allowable range, replace PCM.

Code 55-01 LLT Open (HP Only)

The LLT thermistor provides the liquid line temperature to the PCM for use in heating control and charging. HP units have both an OCT and LLT, while AC units only have LLT. LLT is connected to the PCM through a unique 3-pin connector. If the LLT thermistor fails, full cooling and/or heating operation is permitted, however subcooling calculation in charging mode will become unavailable. A faulted LLT sensor will result in a reported LLT value of 47 F in heating mode and the OCT value in cooling mode.

The sensor is monitored continuously and if resistance is above 465kohm for 1 second this fault will occur. Once sensor value drops below 465kohm for 1 second the fault will clear. This fault does not escalate to a malfunction.

Measure resistance value of thermistor at the PCM connector. If value is above 465kohm, look for a break in the wiring or at the connector itself. If no breaks are observed, replace sensor. If measured resistance is within allowable range, replace PCM.

Code 55-02 LLT Shorted (HP Only)

The LLT thermistor provides the liquid line temperature to the PCM for use in heating control and charging. HP units have both an OCT and LLT, while AC units only have LLT. LLT is connected to the PCM through a unique 3-pin connector. If the LLT thermistor fails, full cooling and/or heating operation is permitted, however subcooling calculation in charging mode will become unavailable. A faulted LLT sensor will result in a reported LLT value of 47°F in heating mode and the OCT value in cooling mode.

Measure resistance value of thermistor at the PCM connector. If value is below 1kohm, look for a short in the wiring or at the connector itself. If no shorts are observed, replace sensor. If measured resistance is within allowable range, replace PCM.

Code 57-01 P1 Open Fault

Code 57-41 P1 Open Lockout

Code 58-01 P2 Open Fault

Code 58-41 P2 Open Lockout

Pressure transducers are dynamically assigned based on their relative values within PCM software. This feature allows the pressure transducers and harnesses to be interchangeable. Each pressure transducer requires 3 wires: Ground (BLK), Power (+5V DC, RED), and Signal (GRN). The ratio of voltage between power and signal wires is converted into a pressure value. If the signal is above or below the pressure transducers ability to measure it may be because the power wire is not supplying 5V DC or the signal wire is not returning a DC Voltage between 0.5-4.5 VDC. A base code of 57 or 58 is determined based on which PCM connection has the issue, P1 or P2. The expansion codes 01 and 41 explain the type of issue, in this case "open", meaning the signal wire is returning more than 4.5V DC. The most likely cause of this the sensor wire being disconnected and the PCM board "pulling" up the signal voltage to +5V DC.

Code 57-02 P1 Shorted Fault

Code 57-42 P1 Shorted Lockout

Code 58-02 P2 Shorted Fault

Code 58-42 P2 Shorted Lockout

Pressure transducers are dynamically assigned based on their relative values within PCM software. This feature allows the pressure transducers and harnesses to be interchangeable. Each pressure transducer requires 3 wires: Ground (BLK), Power (+5V DC, RED), and Signal (GRN). The ratio of voltage between power and signal wires is converted into a pressure value. If the signal is above or below the pressure transducers ability to measure it may be because the power wire is not supplying 5V DC or the signal wire is not returning a DC Voltage between 0.5-4.5 VDC. A base code of 57 or 58 is determined based on which PCM connection has the issue, P1 or P2. The expansion codes 02 and 42 explain the type of issue, in this case "shorted", meaning the signal wire is returning less than 0.5V DC. The most likely cause for this is the sensor wire being shorted to the metal chassis.

Code 57-43 P1 Sensor Lockout

Code 58-43 P2 Sensor Lockout

Pressure transducers are dynamically assigned based on their relative values within PCM software. For this reason the pressure transducers and harnesses are interchangeable. Each pressure transducer requires 3 wires: Ground (BLK), Power (+5V DC, RED), and Signal (GRN). The ratio of voltage between power and signal wires is converted into a pressure value. The pressure transducer is capable of sending a value to PCM via sensor wire if it is not working correctly. A base code of 57 or 58 is determined based on which PCM connection has the issue, P1 or P2. When a DC V value of 4.84-4.95 is returned to PCM it will trigger 57-43 or 58-43 fault. The most likely cause of this is a failed transducer part. Switch the harnesses from P1 and P2 to see if the malfunction follows the transducer. If so, follow procedure to replace failed pressure transducer. Trace wires from PCM board connection to ensure correct transducer is being replaced.

Code 61-13 Reversing Valve Timeout Fault

Code 61-53 Reversing Valve Timeout Lockout

Applies to HP only. The reversing valve is required to be energized for cooling operation and for defrosting during heating operation. The reversing valve will only actuate when the pressure difference between the suction and discharge of the compressor is above a minimum level. The 61-13 will be set whenever the minimum pressure condition prevents a reversing valve switch for 10 minutes. The 61-53 will be set when the 61-13 has been set 4 times in 2 hours. The 61-53 will result in a 2 hour lockout. When this fault occurs it may be due to the reversing valve being stuck between the heating and cooling positions, or the compressor is not pumping properly. If this lockout occurs repeatedly then a reversing valve or compressor replacement may be needed.

Code 61-41 RVS Open Lockout

Applies to HP only. Reversing valve is required to be energized for cooling operation, and for defrosting during heating operation, therefore the system will declare 61-41 when it senses the reversing valve coil is “open” or infinite resistance, and not operational. This check can only be performed when the reversing valve is not energized so it is possible that a reversing valve coil failure during the cooling season may not be identified since the reversing valve continues to be powered between cooling cycles. In this case the system will not declare a fault but the reversing valve will be in the heating position.

Remove RVS connector from PCM and measure continuity between pins 1 & 3. If open or shorted, inspect wire for damage and repair if necessary. If no damage is found, replace coil and harness.

Code 62-01 PEV Solenoid Open

(191VAN/290VAN,291VAN,293VAN Models)

PEV (pressure equalization valve) is used to equalize pressures across the compressor prior to starting in order to ensure the compressor can align itself and start will minimal effort. The system will declare 62-01 when it senses the PEV coil is “open” or infinite resistance. The system will continue to operate while this fault is active as long as the pressures are within acceptable range prior to start attempt. If not, the system will not start until pressure differential drops to acceptable range.

Remove PEV connector from PCM and measure continuity between pins 1 & 3. If open, inspect wire for damage and repair if necessary. If no damage is found, replace coil and harness.

Code 64-41 EXV-H Phase Open Lockout

Applies to HP only. EXV-H is required to control superheat in heating mode. Each time power is applied to outdoor unit the EXV-H will operate to a known position as the valve does not have the capability to feedback actual position. The PCM software must know the starting point and then count as EXV stepper motor is pulsed. At the end of each cycle the valve will close to help maintain pressure differential and optimize cyclic efficiency. HP units will not operate if this fault is active because the valve position at time of failure is unknown.

This code occurs when the PCM determines the resistance of the stepper motor coil circuit is above the maximum value to properly function. Inspection of the wire harness and plug should be performed, as well as using multimeter to confirm “open” continuity between pins. If nothing is found, replace coil and harness assembly.

Code 64-44 EXV-H Power Shorted Lockout

Applies to HP only. EXV-H is required to control superheat in heating mode. Each time power is applied to the unit, the EXV-H will operate to a known position as the valve does not have the capability to feedback actual position. The PCM software must know the starting point and then count when stepper motor is pulsed. At the end of each cycle the valve will close to help maintain pressure differential and optimize cyclic efficiency. HP units will not operate if this fault is active because the valve position at time of failure is unknown.

This code occurs when the PCM determines the EXV power supply is drawing excessive current. The most likely cause of this fault is the wire attached to pin 1 of EXV-H connector being shorted to ground. Inspection of the wire harness and plug should be performed, as well as using multimeter to confirm “short to ground” continuity. If nothing is found, replace coil and harness assembly.

Code 65-41 EXV-VI Phase Open Lockout

(293VAN060 and 291VAN054 Only)

EXV-VI is required to control the refrigerant going to the vapor injection circuit when vapor injection is active. Each time power is applied to outdoor unit the EXV-VI will operate to a known position as the valve does not have the capability to feedback actual position. The PCM software must know the starting point and then counts as the EXV stepper motor is pulsed. At the end of each cycle the valve will close to help maintain pressure differential and optimize cyclic efficiency. HP units will not operate if this fault is active because the valve position at time of failure is unknown.

This code occurs when the PCM determines the resistance of the stepper motor coil circuit is above the maximum value to properly function. Inspection of the wire harness and plug should be performed, as well as using a multimeter to confirm "open" continuity between pins. If nothing is found, replace coil and harness assembly.

Code 65-44 EXV-VI Power Shorted Lockout

(293VAN060 and 291VAN054 Only)

EXV-VI is required to control the refrigerant going to the vapor injection circuit when vapor injection is active. Each time power is applied to the unit, the EXV-VI will operate to a known position as the valve does not have the capability to feedback actual position. The PCM software must know the starting point and then count when stepper motor is pulsed. At the end of each cycle the valve will close to help maintain pressure differential and optimize cyclic efficiency. HP units will not operate if this fault is active because the valve position at time of failure is unknown.

This code occurs when the PCM determines the EXV power supply is drawing excessive current. The most likely cause of this fault is the wire attached to pin 1 of EXV-VI connector being shorted to ground. Inspection of the wire harness and plug should be performed, as well as using a multimeter to confirm "short to ground" continuity. If nothing is found, replace coil and harness assembly.

Code 65-45 EXV-VI Phase Shorted Lockout

(293VAN060 and 291VAN054 Only)

EXV-VI is required to control the refrigerant going to the vapor injection circuit when vapor injection is active. Each time power is applied to the unit, the EXV-VI will operate to a known position as the valve does not have the capability to feedback actual position. The PCM software must know the starting point and then count when stepper motor is pulsed. At the end of each cycle the valve will close to help maintain pressure differential and optimize cyclic efficiency. HP units will not operate if this fault is active because the valve position at time of failure is unknown.

This code occurs when the PCM determines the EXV power supply is drawing excessive current. The most likely cause of this fault is one or more wires attached to pins 2-5 of the EXV-VI connector being shorted to ground. Inspection of the wire harness and plug should be performed, as well as using a multimeter to confirm "short to ground" continuity. If nothing is found, replace coil and harness assembly.

Code 65-45 EXV-VI Phase Shorted Lockout

(293VAN060 and 291VAN054 Only)

EXV-VI is required to control the refrigerant going to the vapor injection circuit when vapor injection is active. Each time power is applied to the unit, the EXV-VI will operate to a known position as the valve does not have the capability to feedback actual position. The PCM software must know the starting point and then count when stepper motor is pulsed. At the end of each cycle the valve will close to help maintain pressure differential and optimize cyclic efficiency. HP units will not operate if this fault is active because the valve position at time of failure is unknown.

This code occurs when the PCM determines the EXV power supply is drawing excessive current. The most likely cause of this fault is one or more wires attached to pins 2-5 of the EXV-VI connector being shorted to ground. Inspection of the wire harness and plug should be performed, as well as using a multimeter to confirm "short to ground" continuity. If nothing is found, replace coil and harness assembly.

Code 66-41 VFD Control Relay Open Lockout

The PCM commands the VFD to close a relay in the power circuit during VFD initialization. If PCM senses the VFD relay coil is open this code is set. While this code is active the VFD will not be powered and system is inoperable. 12VDC is fed from Pins 6&7 of the PCM into pins 5&6 at the VFD via communication cable as long as system is ready to run (other faults that stop system from operation are not active).

To troubleshoot this fault, remove the PCM-VFD harness from the PCM while leaving the other end connected to the VFD. Check the resistance between the pins 6 & 7 of the harness connector. The resistance should be approximately 720 ohms. If the resistance is much higher than 720 ohms, then remove the connector at the other end of the cable from the VFD. Check the resistance between pin 6 of the PCM connector and pin 5 of the VFD connector, then pin 7 of the PCM connector and pin 6 of the VFD connector. If either of these shows a resistance higher than just a few ohms, then the cable is the cause of the problem. If the cable checks OK, the problem may be with the VFD. Check the resistance between pins 5 and 6 of the VFD connector. If this resistance is significantly higher than 720 ohms, then the problem is within the VFD.

Code 66-42 VFD Control Relay Shorted Lockout

The PCM commands the VFD to close a relay in the power circuit during VFD initialization. If PCM senses the VFD relay coil is shorted to ground this code is set. While this code is active the VFD will not be powered and system is inoperable. 12VDC is fed from Pins 6&7 of the PCM connector into pins 5&6 of the VFD connector via communication cable as long as system is ready to run (other faults that stop system from operation are not active). Check to ensure comm harness is not damaged and shorting to ground or another wire.

To troubleshoot this fault, remove the PCM-VFD harness from the PCM while leaving the other end connected to the VFD. Check the resistance between the pins 6 & 7 of the harness connector. The resistance should be approximately 720 ohms. If the resistance is much lower than 720 ohms, then remove the connector at the other end of the cable from the VFD. Check the resistance between pins 5 and 6 of the comm cable connection at VFD. If this resistance is significantly lower than 720 ohms, then the problem is within the VFD.

VFD Related Faults General Info

Occasional VFD faults may occur that are caused by specific external circumstances. In these cases the VFD will self-recover and continue to operate normally. Once faults escalate to malfunctions permanent damage may be present. The service person should use judgment when replacing components to determine if occasional external conditions are present or if equipment is damaged and require replacement because system is not providing expected performance.

Code 79-01 USB Drive Fault

(249VAN Only)

This fault is set when the controller is unable to mount or access the USB drive. Conditions include failure to mount the USB drive, failure to switch to the mounted drive, expiration of the mount timer, or inability to open required software files (.bex for PCM or .dat for VFD).

The most likely cause is the USB drive not being fully seated, incompatible, or improperly formatted. It is also possible that the USB drive has missing or corrupted software files

Remove and re-seat the USB drive. Verify the USB drive is approved, correctly formatted, and contains the required files. Retry the operation with a good USB drive if necessary.

NOTE: Best results will be obtained by using a USB memory device that is between 4GB and 32GB in size and formatted as a FAT32 device. Any other formatting (NTFS, exFAT, etc.) may result in an error.

Code 79-02 USB File Not Found

(249VAN Only)

This fault is set when required USB files or directories cannot be accessed or validated. This includes failure to open or navigate the manifest or updates directories, inability to read manifest contents, invalid CRC values, missing required XML tags, unsupported or malformed manifest files, missing OTA file name tags, or read errors when accessing update files (.bex or .dat).

The most likely cause is an incorrect USB directory structure, corrupted or unsupported manifest file, missing update files, or incomplete software package copied to the USB drive.

Verify the USB directory structure matches required specifications. Reload the correct software package to the USB drive using an approved source. Replace the USB drive if corruption persists.

NOTE: Best results will be obtained by using a USB memory device that is between 4GB and 32GB in size and formatted as a FAT32 device. Any other formatting (NTFS, exFAT, etc.) may result in an error.

Code 79-03 USB Invalid Software Update Version

(249VAN Only)

This fault is set when an invalid software update is detected. Conditions include failure to open the update file (.bex or .dat), attempting to install a software version equal to or lower than the currently installed version, or read/seek errors while accessing update files during installation.

The most likely cause is incorrect software version selected, corrupted update file, or incomplete copy of update files to the USB drive.

Confirm the update version is newer than the installed version. Reload the correct update files onto the USB drive and retry the update using a validated software package.

NOTE: Best results will be obtained by using a USB memory device that is between 4GB and 32GB in size and formatted as a FAT32 device. Any other formatting (NTFS, exFAT, etc.) may result in an error.

Code 81-13 VFD System Fault - PFC

Code 81-53 VFD System Lockout - PFC

The power factor correction circuit (PFC) in VFD introduces an inductance which corrects the current phase shift inherent with powering motors. This in turn minimizes the reactive power transmitted back to input power cables. This fault is set when the PFC circuit exceeds a peak current limit when driving compressor. System will shut down and VFD will reset, if demand persists, system will attempt to resume normal operation. After 2 occurrences within 10 minutes, code 81-53 is set and system is locked out for 4 hours. A power cycle will clear malfunction lockout timer. Continued malfunctions indicate high current situation. This is likely due to VFD or compressor damage. Measure reactor(s) resistance. As reactor charges the resistance will be reduced to 0. If measurement is open, replace reactor. Otherwise replace VFD.

Code 81-14 VFD System Fault - Unbalanced PFCM

Code 81-54 VFD System Lockout - Unbalance PFCM

Applicable to 4 and 5 ton models only with multiple reactors. This fault occurs when current in PFCM circuits is not balanced. It is most likely caused by a disconnected or faulty reactor. The VFD will shut down and attempt to restart after each occurrence of code 81-14. After 2 occurrences within 10 minutes, code 81-54 is set and system is locked out for 4 hours.

Disconnect and measure resistance of both reactors in system. As reactor charges the resistance will be reduced to 0. If measurement is open, replace reactor. Otherwise replace VFD.

Code 81-15 VFD Current Detection Value Error

Code 81-55 VFD Current Detection Value Malfunction

(249VAN Only)

This error only occurs when the components in the compressor drive section of the VFD have failed. Since current cannot be detected correctly in this condition, the VFD must be replaced.

Code 81-58 VFD System Lockout - Wiring Error

This fault occurs when the VFD senses that 1 or more of the compressor wires are not connected to VFD. While this fault is active the system is inoperable. Check compressor wire harness at each end and ensure connections are tight fitting and wires are undamaged. Perform continuity test on compressor harness with DMM. Check resistance of compressor windings at VFD end of compressor harness to ensure no windings are open. Refer to Table 5 for compressor winding resistance by outdoor model.

Code 82-11 VFD System Fault - Line Current Limit

The VFD monitors input current and will limit or reduce compressor speed if the current rises above threshold. Current limits are model specific. While code 82-11 is active the VFD will continue to operate compressor at a reduced or limited speed, while fan operation will not be affected directly. This code will clear once VFD input current drops below threshold. Low input voltage combined with high load is the most likely cause of this code. Check system for overcharge and indoor/outdoor coil blockage as well as input voltage.

Code 82-12 VFD System Line Voltage Limit Active

(249VAN Only)

High line voltage may result in increased stress on electronic components and shorten the life of the VFD. Code 82-12 is set when the VFD detects that the incoming line voltage rises above 264 VAC RMS. Once line voltage drops below these thresholds the fault will clear. While fault is active unit will operate at a reduced capacity.

Technician should first measure incoming line voltage at terminal block using VOM. If voltage reading is above 264 VAC RMS, additional steps involving the local power utility or the addition of external power conditioner may be required.

Code 82-13 VFD Reset with Power Dropout

Code 82-53 VFD Lockout - Reset with Power Drop

This code indicates the VFD has reset itself due to a line voltage loss. When this code is set the PCM will complete a shutdown, reset the VFD, and restart if demand is still present. The system should resume operation after the 5 minute compressor protection time delay expires. 3 occurrences of code 82-13 within a 1 hour period will result in a code 82-53 and 2 hour lockout. Occasional occurrences of this code may happen due to momentary power loss or electrical noise from utility. Check tightness of all line voltage connections. Loose connections can cause momentary voltage drop due to vibration and trigger this fault. If all connections are tight, additional steps involving the local power utility or addition of external power conditioner may be required.

Code 82-15 VFD Fault with Power Dropout

Code 82-55 VFD Lockout - Fault with Power Drop

This code indicates the VFD has shutdown due to a line voltage loss. When this code is set the PCM will reset the VFD, and restart if demand is still present. The system should resume operation after 5 minute compressor protection time delay expires. 4 occurrences of code 82-15 within a 1 hour period will result in a code 82-55 and 2 hour lockout. Occasional occurrences of this code may happen due to momentary power loss or electrical noise from utility. This code can be paired with other codes if electrical noise is present. Check tightness of all line voltage connections. Loose connections can cause momentary voltage drop due to vibration and trigger this fault. If all connections are tight, additional steps involving the local power utility or addition of external power conditioner may be required.

Code 82-16 VFD System Fault - Low Line Volt

Code 82-56 VFD System Lockout - Low Line Volt

The VFD monitors line voltage and will set code 82-16 if line voltage drops below 180VAC peak. When code 82-16 occurs the system will shut down and reset VFD. System will attempt to resume operation once 5 minute compressor protection timer expires. 4 occurrences of code 82-16 in a 1 hour period will result in code 82-56 and will shut down equipment for a 2 hour lockout. Measure input voltage with a power quality analyzer and contact power utility provider if necessary.

Code 82-17 VFD System Fault - High Line Volt

Code 82-57 VFD System Lockout - High Line Volt

The VFD monitors line voltage and will set code 82-17 if line voltage rises above 410VAC peak. When code 82-17 is occurs the system will remain operating as it is likely caused by a momentary voltage spike that will not damage the VFD. If a long term unsafe high voltage event occurs, the PCM will generate a 15-94 and shut down equipment. 10 events of code 82-17 in a 1 hour period will result in code 82-57 and will shut down equipment for a 2 hour lockout. Measure input voltage with a power quality analyzer and contact power utility provider if necessary.

Code 82-18 IGBT Short Detection Error

Code 82-58 IGBT Short Detection Malfunction

(249VAN Only)

Code 82-18 indicates an internal short. Inspect VFD control board for debris that may have created an electrical short. Inspect wire harnesses and terminals for pinched wires or insulation that has bare spots.

Three instances of code 82-18 in one hour will generate the code 82-58 with a 2 hour lockout. If this code persists the VFD will need to be replaced.

Code 83-11 VFD Compressor Fault - Current 1

Code 83-12 VFD Compressor Fault - Current 2

Code 83-13 VFD Input Current Limit

The VFD monitors multiple compressor current conditions and will limit or reduce compressor speed if the current rises above threshold. Current limits are model specific. While codes are active the VFD will continue to operate compressor at a reduced or limited speed, and fan operation will not be affected directly. This code will clear once compressor current drops below threshold. This code indicates the compressor may have minor damage and requires slightly higher torque (current) to operate at desired rpm. If damage continues to worsen the compressor may cause code 83-15, 83-55, 83-16, and 83-56. Check system for overcharge and indoor/outdoor coil blockage as well as input voltage. Listen to compressor during operating for abnormal noise indicating physical damage. If code persists or compressor has abnormal noise, replace compressor.

Code 83-15 VFD Compressor Fault - Current 3

Code 83-55 VFD Compressor Lockout - Current 3

Code 83-16 VFD Compressor Fault - Current 4

Code 83-56 VFD Compressor Lockout - Current 4

The VFD monitors multiple compressor current conditions and will limit or reduce compressor speed if the current rises above threshold. Current limits are model specific. Code 83-15, 83-16, 83-55, and 83-56 will result if the VFD is not capable of reducing compressor speed far enough or fast enough while running. This code will shut down system and attempt restart after 5 minute compressor protection timer has expired. 2 instances of code 83-15/83-16 in a 4 hour period will result in code 83-55/83-56 and a 2 hour lockout. These codes indicate the compressor requires higher torque (current) to operate at desired rpm. Check system for overcharge and indoor/outdoor coil blockage as well as input voltage. Check wiring from VFD to compressor for poor connections causing high current. Check compressor winding resistance against table. Listen to compressor during operating for abnormal noise indicating physical damage. VFD may have internal damage causing high current, or compressor may be damaged.

Code 83-57 VFD Compressor Lockout - Current 1

This code will be set when any of the VFD compressor speed limiting codes are active and the compressor speed is reduced below the lowest allowable operating speed for a given OAT. Once 1 hour lockout timer expires the unit will attempt to resume operation. This code indicates the compressor requires higher torque (current) to operate at desired rpm and compressor is mechanically damaged. If code persists, replace compressor.

Code 84-11 IPM Over Temperature Fault

Code 84-51 IPM Over Temperature Malfunction

(249VAN Only)

The VFD has internal temperature sensors to monitor critical power components and take action if operating temperatures cross thresholds that may shorten the VFDs operating life. In normal operation the system will take action before a code 84-11 can occur, so this code should be rare. Multiple code 84-11 faults will generate a code 84-51 and lockout for 2 hours. If this code persists the VFD should be replaced.

Code 84-58 VFD Heatsink Overtemp Malfunction

The VFD has internal temperature sensors to monitor critical power components and take action if operating temperatures cross thresholds that may shorten the VFDs operating life. If the heat sink temperature sensor fails, it will no longer be capable of preventing critical power components from operation above the safe reliable temperature threshold. This fault will be set when the VFD IPM or PFCM temperatures are greater than or equal to 203°F.

If this fault is active, the VFD will shut down compressor but continue to operate fan to draw air across heat sink. Once heat sink temperature is acceptable, system will restart but reduce demand by 25% for each occurrence of 84-11. Once speed can no longer be reduced further, code 84-58 will be set and system locked out for 2 hours. Each hour of operation without additional code 84-11 will allow increased demand of 25%. The most likely cause is restricted airflow over heat sink. Inspect and clear heatsink of anything that may inhibit airflow or contact with air. A less likely possibility is inadequate contact of power components with heat sink, not allowing intended heat transfer between components and heat sink. If clearing heatsink of blockage does not eliminate codes, replace VFD.

Code 85-13 VFD System Fault - DC Under Voltage

Code 85-53 VFD System Lockout - DC Under Volt

The VFD boosts line voltage and uses the PFC circuit to maintain DC voltage within an acceptable range. Code 85-13 is set when the DC voltage is lower than the acceptable lower limit of 180VDC. Attempting to operate VFD below minimum DC voltage can cause failed/reduced compressor or fan operation. 4 occurrences within 1 hours result in 85-53 malfunction which has a 2 hour lockout time. An instance of 85-13 will result in VFD shutdown and system restart once 5 minute compressor protection timer expires. Low AC line voltage, quickly loading the compressor, or a damaged PFC circuit in VFD may result in a code 85-14. Check to ensure reactors are plugged in securely. Manually power cycle outdoor unit with disconnect, if malfunction persists replace reactors, then VFD.

Code 85-14 VFD System Fault - DC Over Voltage

Code 85-54 VFD System Lockout - DC Over Volt

The VFD boosts line voltage and uses the PFC circuit to maintain DC voltage within an acceptable range. Code 85-14 is set when the DC voltage exceeds the acceptable upper limit of 410VDC. Exceeding maximum DC voltage can damage electrical circuits or shorten the VFD operating life. 4 occurrences within 1 hours result in 85-54 malfunction which has a 2 hour lockout time. An instance of 85-14 will result in VFD shutdown and system restart once 5 minute compressor protection timer expires. High AC line voltage or quickly unloading the compressor may result in a code 85-14. Manually power cycle outdoor unit with disconnect, if malfunction persists replace VFD.

Code 86-06 VFD System Fault - Communication

Code 86-46 VFD System Lockout - Communication

If communication between VFD and PCM does not occur for a continuous 15 seconds, code 86-06 is set by PCM. 3 occurrences within 15 minutes will result in 86-46 malfunction, which has a 1 hour lockout. When code 86-06 is set, VFD will shut down compressor and fan, and re-initialize in an attempt to re-establish communication between VFD and PCM. Inspect PCM to VFD communication harness for damage and connectivity, replace if necessary. If this does not fix problem, the VFD communicating components have been damaged and PCM or VFD requires replacement.

Code 87-13 VFD Initialization Fault

Code 87-53 VFD System Lockout - Initialization

The VFD communicates identification information to PCM when initializing to run. This information is used to identify the equipment and reference correct operating tables. When unrecognized information is received the PCM will set fault 87-13 and reset the VFD to restart the initialization process. After 3 instances of fault 87-13 within 4 hour period 87-53 malfunction is set and system is locked out for 4 hours. The most likely cause of this fault is an incorrect model plug. Check for correct model plug in model plug table.

Code 88-15 VFD Internal Fault - Unexpected Reset

Code 88-55 VFD Lockout - Unexpected Reset

Communication between the VFD and PCM is monitored continuously. If communication fails, the PCM will initiate a VFD reset in an attempt to restart the communicating components of VFD. The system will shut down and restart after 5 minute compressor protection timer expires. Three occurrences of code 88-15 within a 1 hour period will result in 88-55 malfunction and 2 hour lockout. Inspect PCM to VFD communication harness for damage and connectivity, replace if necessary. If this does not fix problem, the VFD communicating components have been damaged and VFD requires replacement.

Code 88-27 VFD Reprogramming Failure

Code 88-27 indicates that an attempt to reprogram the VFD failed. If this diagnostic is not recent, then a subsequent reprogramming attempt may have succeeded. The technician should check the current VFD software version against the latest software release. If the VFD software is not the most current, then the VFD should be reprogrammed manually using the Evolution™ Connex™ System Control or the Bryant Service Tech App.

Code 88-31 VFD Internal Fault - Current Sensor

Code 88-71 VFD Lockout - Comp Current Sensor

The VFD measures the compressor current value internally. If the compressor current measurement is not reported to VFD, it will shut down and attempt a restart after 5 minute compressor protection timer expires. Operating VFD without monitoring compressor current may result in compressor damage. Three occurrences of code 88-31 within a 4 hour period will result in 88-71 malfunction and 4 hour lockout. While this fault or malfunction is active the unit is inoperable. This malfunction, once set, is unlikely to go away and indicates VFD damage. Manually power cycle outdoor unit with disconnect, if malfunction persists replace VFD.

Code 88-72 VFD Internal Error - IPM Temp Sensor

(249VAN Only)

The VFD has internal temperature sensors to monitor critical power components and take action if operating temperatures cross thresholds that may shorten the VFDs operating life. Code 88-72 means the system can no longer monitor the IPM, which is critical for system operation. Inspect wire harnesses and terminals for pinched wires or insulation that has bare spots. If no problems are found and the code persists the VFD must be replaced

Code 88-32 VFD Internal Fault - IPM Temp Sens

The VFD has internal temperature sensors to monitor critical power components and take action if operating temperatures cross thresholds that may shorten the VFDs operating life. If the IPM temperature sensor fails it will no longer be capable of preventing the IPM module from operation above the safe reliable temperature threshold. If this fault is active the VFD will continue to operate normally, since the only way to correct this fault is to replace VFD.

Code 88-33 VFD Internal Fault - DC Link Sensor

Code 88-73 VFD Lockout - DC Link Sensor

The VFD measures the DC voltage value internally. If the DC voltage measurement is not within acceptable operating parameters the VFD will shut down and attempt a restart after 5 minute compressor protection timer expires. Three occurrences of code 88-33 within a 4 hour period will result in 88-73 malfunction and 4 hour lockout. While this fault or malfunction is active the unit is inoperable. This malfunction, once set, is unlikely to go away and indicates VFD damage. Manually power cycle outdoor unit with disconnect, if malfunction persists replace VFD.

Code 88-34 VFD Internal Fault - PFCM Sensor A

Code 88-74 VFD Lockout - PFCM Sensor A

The VFD has internal current measurement to protect PFC components from exceeding current thresholds that may shorten the VFDs operating life. If the PFCM Sensor A exceeds safe reliable value, the VFD will shut down immediately and attempt a restart after 5 minute compressor protection timer expires. Three occurrences of code 88-34 within a 4 hour period will result in 88-74 malfunction and 4 hour lockout. While this fault or malfunction is active the unit is inoperable. This malfunction, once set, is unlikely to go away and indicates VFD damage. Manually power cycle outdoor unit with disconnect, if malfunction persists replace VFD.

Code 88-35 VFD Internal Fault - PFCM Sensor B

Code 88-75 VFD Lockout - PFCM Sensor B

The VFD has internal current measurement to protect PFC components from exceeding current thresholds that may shorten the VFDs operating life. If the PFCM Sensor B exceeds safe reliable value, the VFD will shut down immediately and attempt a restart after 5 minute compressor protection timer expires. Three occurrences of code 88-35 within a 4 hour period will result in 88-75 malfunction and 4 hour lockout. While this fault or malfunction is active the unit is inoperable. This malfunction, once set, is unlikely to go away and indicates VFD damage. Manually power cycle outdoor unit with disconnect, if malfunction persists replace VFD.

Code 88-36 VFD Internal Fault - Line Volt Sens

Code 88-76 VFD Lockout - Line Volt Sensor

The VFD has internal voltage measurement to protect components from operating outside of voltage thresholds that may shorten the VFDs operating life. If the line volt sensor value is outside of safe reliable range, the VFD will shut down immediately and attempt a restart after 5 minute compressor protection timer expires. Three occurrences of code 88-36 within a 4 hour period will result in 88-76 malfunction and 4 hour lockout. While this fault or malfunction is active the unit is inoperable. This malfunction, once set, is unlikely to go away and indicates VFD damage. Manually power cycle outdoor unit with disconnect, if malfunction persists replace VFD.

Code 88-37 VFD Internal Fault - PFCM Temp Sens

The VFD has internal temperature sensors to monitor critical power components and take action if operating temperatures cross thresholds that may shorten the VFDs operating life. If the PFCM temperature sensor fails it will no longer be capable of preventing the PFC circuit from operation above the safe reliable temperature threshold. If this fault is active, the VFD will continue to operate normally since the only way to correct this fault is to replace VFD.

Code 88-38 VFD Internal Fault - DC Discharge

Code 88-78 VFD Lockout - Int DC Discharge

The unit VFD boosts the 230 VAC line voltage, converts the boosted AC voltage to DC voltage, and then rapidly switches the DC voltage on and off to create a three-phase waveform that operates the compressor at varying speeds. This fault becomes active when the DC voltage is shorted to ground and the VFD will open the power relay. While this fault or malfunction is active the unit is inoperable. The VFD will attempt to reset itself automatically but if problem persists, the fault will escalate to 88-78 malfunction and lock out system for 4 hours. Manually power cycle outdoor unit with disconnect, if malfunction persists replace VFD.

Code 88-39 VFD Internal Fault - Microprocessor

Code 88-79 VFD Internal Lockout - Microprocessor

This VFD has internal diagnostics to verify that the microprocessor is operating sufficiently to maintain safe compressor and fan operation. If the microprocessor detects any abnormal condition that could result in unsafe operation it will set a diagnostic code. If this occurs, the PCM will set 88-39 and reset the VFD to attempt to remedy the condition. If this attempt is unsuccessful, malfunction Code 88-79 will be set and the system will be locked out for 4 hours. Manually power cycle the outdoor system. If the diagnostic code persists replace the VFD.

Code 88-41 MOSFET Open Error

Code 88-81 MOSFET Open Malfunction

(249VAN Only)

The MOSFET is an internal VFD component. Code 88-41 means the VFD detected a possible problem with the MOSFET and attempts to restart. Four code 88-41 errors in an hour generates a code 88-81 malfunction and a 2 hour lockout. Inspect wire harnesses and terminals for pinched wires or insulation that has bare spots. If no problems are found and the code persists the VFD must be replaced.

Code 91-06 Incorrect Compressor Speed Reported Fault

Code 91-46 Incorrect Compressor Speed Reported Malfunction

(249VAN Only)

The PCM communicates the requested compressor speed to the VFD, which in turn powers the compressor and monitors its actual RPM. If the requested compressor speed and the actual compressor speed are not in agreement, it indicates a possible problem with VFD drive, NOT the compressor. A code 91-06 will normally resolve itself by shutting down and restarting the compressor. If the code 91-06 occurs 4 times in one hour it will generate a code 91-46 and lockout for 1 hour. If this code persists the VFD needs replaced.

Table 10 – 191VAN/290VAN/291VAN/293VAN Fault Code Table

Code*			Description
Base	Expansion		
	Fault**	Malfunction***	
13	82	53	System Control Software Upgrade Recommended
14	94		Line Voltage Low
15	94		Line Voltage High
18	11		Indoor Coil Freeze Protection
24		58	5V PCM External Power Out of Range
25		61	Invalid Model Configuration
	22	62	Model Configuration Missing
	24		Model Configuration Changed
		63	VFD/Equipment Model Mismatch
26	26		PCM MCU Old Version
	27		PCM Reprogramming Failure
	31		EEPROM Write Failure
28		71	Fuse 1 Open (PEV / RVS)
		72	Fuse 2 Open (LLV)
31	11	58	Compressor High Pressure Limit
	16		High Pressure Switch Trip
	19		High Pressure Disable
32	15	55	Compressor Low Pressure Limit
		59	Low Pressure Disable
33	15	55	Compressor Low Discharge Limit
34	11	58	Compressor High Temperature Limit
35	11	58	Compressor High Compression Limit
36	15	55	Compressor Low Compression Limit
38	13	53	Compressor Starting Error
		54	Compressor No Pump
	18		High Differential Pressure Start Disable
	31	71	VFD Estimator Error
39	13	53	Fan Start Error
	14		Fan Speed Error
	15	55	Unexpected Fan Shutdown
		58	Fan Motor Error
41	13		Defrost Overrun
44	13		PEV Timeout
51	01		OAT (Outdoor Air Thermistor) Open/Low Temp
	02		OAT (Outdoor Air Thermistor) Shorted/High Temp
52	01		OCT/LLT-AC (Outdoor Coil Temp (HP)/Liquid Line Temp (AC)) Sensor Open/Low Temp
	02		OCT/LLT-AC (Outdoor Coil Temp (HP)/Liquid Line Temp (AC)) Sensor Shorted/High Temp
53		41	OST (Outdoor Suction Thermistor) Open/Low Temp
		42	OST (Outdoor Suction Thermistor) Shorted/High Temp
54	01		ODT (Outdoor Discharge Thermistor) Open/Low Temp
	02		ODT (Outdoor Discharge Thermistor) Shorted/High Temp
55	01		LLT (Liquid Line Temp) Sensor Open/Low Temp (HP Only)
	02		LLT (Liquid Line Temp) Sensor Shorted/High Temp (HP Only)
57	01	41	P1 Open
	02	42	P1 Shorted
		43	P1 Sensor Error
58	01	41	P2 Open
	02	42	P2 Shorted
		43	P2 Sensor Error
61		41	Reversing Valve Solenoid Open
61	13	53	Reversing Valve Timeout
62	01		PEV Solenoid Open

Table 10 – 191VAN/290VAN/291VAN/293VAN Fault Code Table (Continued)

Code*			Description
Base	Expansion		
	Fault**	Malfunction***	
64		41	EXV-H Phase Open
		44	EXV-H Power Short to Ground
		45	EXV-H Phase Short to Ground
66		41	VFD Control Relay Coil Open
		42	VFD Control Relay Coil Shorted
81	13	53	PFC Error
	14	54	Unbalanced PFCM Error
		58	VFD System Wiring Error
82	11		VFD Line Current Speed Reduction
	13	53	VFD Reset with Power Dropout
	15	55	VFD Shutdown with Power Dropout
	16	56	Low Voltage Shutdown
	17	57	High Voltage Shutdown
83	11		Compressor Current Limit 1 Speed Reduction
	12		Compressor Current Limit 2 Speed Reduction
	15	55	Compressor Current Limit 3 Shutdown
	16	56	Compressor Current Limit 4 Shutdown
		57	Compressor Under-speed Shutdown
84	11	58	VFD Heat Sink Overtemp Shutdown
85	13	53	DC Under Voltage Shutdown
	14	54	DC Over Voltage Shutdown
86	06	46	VFD Communication Error
87	13	53	VFD Initialization Error
88	15	55	Unexpected VFD Reset
	27		VFD Reprogramming Failure
	31	71	VFD Internal Error - Current Sensor
	32		VFD Internal Error - IPM Temp Sensor
	33	73	VFD Internal Error - DC Link Sensor
	34	74	VFD Internal Error - PFCM Sensor A
	35	75	VFD Internal Error - PFCM Sensor B
	36	76	VFD Internal Error - Line Volt Sensor
	37		VFD Internal Error - PFCM Temp Sensor
	38	78	VFD Internal Error - DC Discharge Following
	39	79	VFD Internal Error - Microprocessor

*Code is reported by the thermostat

Table 11 – 249VAN Fault Code Table

SERVICE

Base	Expansion Fault*	Expansion Malfunction**	DESCRIPTION
14	94		Line Voltage Low
15	94		Line Voltage High
18	11		Indoor Coil Freeze Protection
19	06		Lost PLC Communications with TSTAT
	07		Thermostat Authentication Fault
21	06		Lost PLC Communications with IDU
	07		Indoor Authentication Fault
24		58	5V PCM External Power Out of Range
25		62	PCM Model Configuration Missing
		63	VFD/PCM Model Mismatch
26	27		PCM Reprogramming Failure
	31		PCM EEPROM Write Failure
28		71	Fuse 1 Open (RVS)
		72	Fuse 2 Open (LLS)
		73	VFD 15V Shorted to Ground
31	11	58	Compressor High Pressure Limit
	16	56	High Pressure Switch Trip
	19		High Pressure Disable
32	15	55	Compressor Low Pressure Limit
		59	Low Pressure Disable
33	15	55	Compressor Low Discharge Limit
34	11	58	Compressor High Temperature Limit
35	11	58	Compressor High Compression Limit
36	15	55	Compressor Low Compression Limit
37	41		Cold Compressor Sump Lockout
38	13	53	Compressor Starting Error
		54	Compressor No Pump
		55	Compressor Physical Malfunction
	14		Compressor Disconnect
	18		High Differential Pressure Start Disable
	31	71	Sensorless Control Stall
39	13	53	Fan Start Error
	14		Fan Speed Error
	15		Unexpected Fan Shutdown
41	13		Defrost Overrun
44	14		Pressure Equalization Timeout
45	14		General Power Curtailment Event
	15		Critical Power Curtailment Event
	16		Off Mode Power Curtailment Event
51	01		OAT (Outdoor Air Temp) Sensor Open
	02		OAT (Outdoor Air Temp) Sensor Shorted
		43	OAT Not Valid
52	01		OCT-HP (Outdoor Coil Temp(HP)) Sensor Open
	02		OCT-HP (Outdoor Coil Temp(HP)) Sensor Shorted
	03		LLT-AC Sensor Open
	04		LLT-AC Sensor Shorted
53	01	41	OST (Outdoor Suction Temp) Sensor Open
	02	42	OST (Outdoor Suction Temp) Sensor Shorted/High Temp
54	01		ODT (Outdoor Discharge Temp) Sensor Open/Low Temp
	02		ODT (Outdoor Discharge Temp) Sensor Shorted/High Temp
55	01		LLT-HP (Liquid Line Temp) Sensor Open/Low Temp (HP Only)
	02		LLT-HP (Liquid Line Temp) Sensor Shorted/High Temp (HP Only)
57	01	41	P1 Open
	02	42	P1 Shorted
58	01	41	P2 Open
	02	42	P2 Shorted
61		41	Reversing Valve Solenoid Open
	13	53	Reversing Valve Timeout
	55	95	Reversing Valve Solenoid Position Incorrect
64		41	EXV-H Phase Open (HP Only)
		44	EXV-H Power Short to Ground (HP Only)
		45	EXV-H Phase Short to Ground (HP Only)
79	01		USB Drive Fault
	02		USB File Not Found
	03		USB Invalid SW Update Version
81	13	53	PFC Error
	14	54	Unbalanced PFCM Error
	15	55	VFD Current Detection Value
	31		Stator Heat Incorrect
82	11		VFD Input Power Limit Active
	12		VFD System Line Voltage Limit Active
	16	56	Low Voltage Shutdown
	17	57	Line Over Voltage
	18	58	IGBT Short Detection
83	11		VFD Compressor Current Limit Active
	12		VFD Line Peak Current Limit Active
	13		VFD Input Current Limit Active
	15	55	Running Motor Over Current
	57		VFD Compressor Underspeed Fault
84	11	55	IPM Over Temperature
85	13	53	DC Under Voltage Shutdown
	14	54	DC Over Voltage Shutdown
86	06	46	VFD Communication Error
87	13	53	VFD Initialization Error
88	27		VFD Reprogramming Failure
	32	72	VFD Internal Error - IPM Temp Sensor
	41	81	MOSFET Open
89	67		VFD Software Version Error
	68		VFD Model Error
91	6	46	Incorrect Compressor Speed Reported

*Fault indicates a condition that interrupts or limits but does not prevent equipment operation. Faults may be temporary/intermittent or permanent.

**Malfunctions indicate a serious condition that significantly limits or prevents system operation. Malfunctions may be an escalation of a repetitive fault condition.

352505-101 REV. A

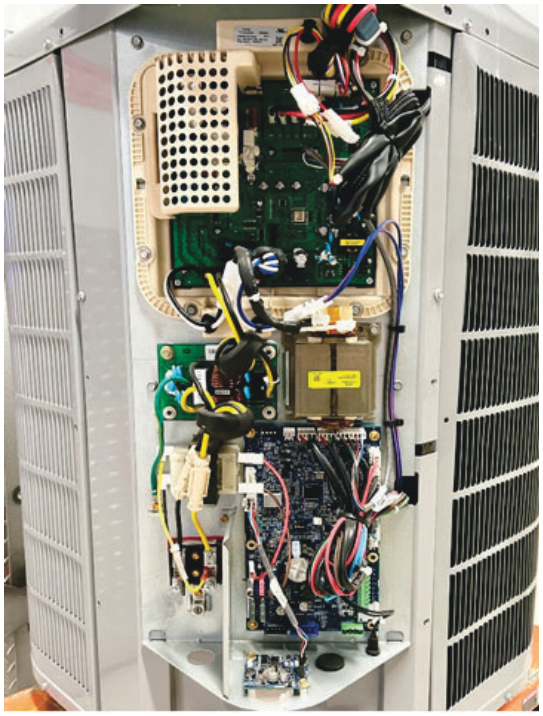

A250146

Fig. 25 – 191VAN and 290VAN 2T/3T Control Box

A250147

Fig. 26 – 191VAN and 290VAN 4T/5T Control Box
Note:4T VFD similar, not exact.
5T reactors have additional chokes and are routed differently to meet FCC requirements

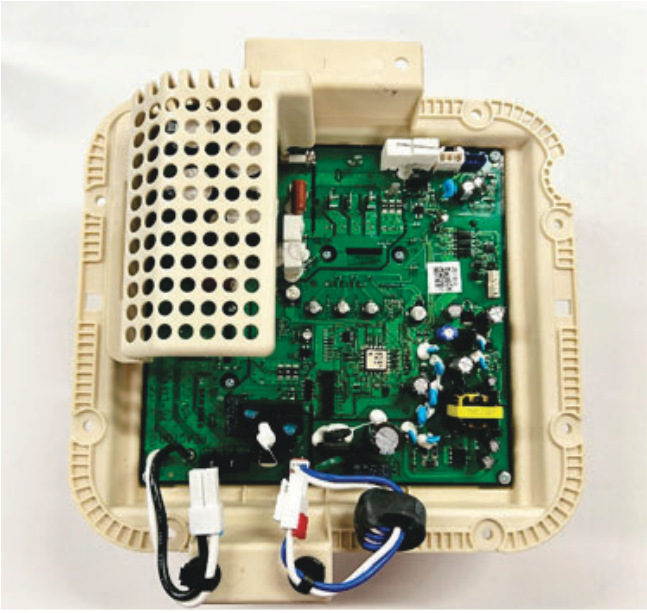

A250148

Fig. 27 – 191VAN and 290VAN 2T/3T VFD

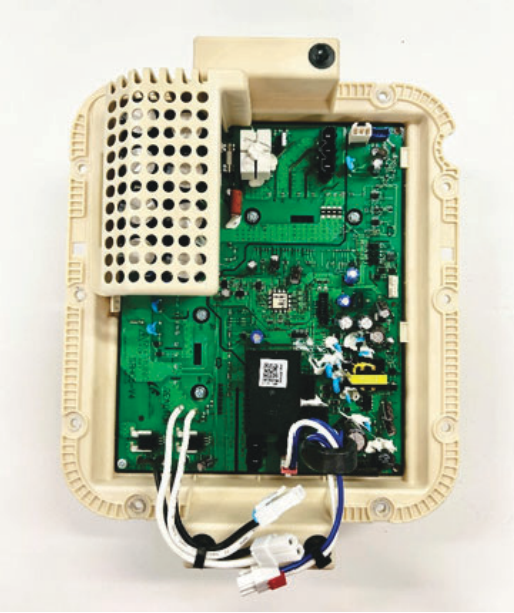

A250149

Fig. 28 – 191VAN and 290VAN 4/5T VFD 5T VFD shown
(4T VFD similar but not exact)

A260631

Fig. 29 – 293VAN 2/3T Control Box

A260634

Fig. 30 – 293VAN 4/5T Control Box
5T reactors have additional chokes and are routed differently to meet FCC requirements

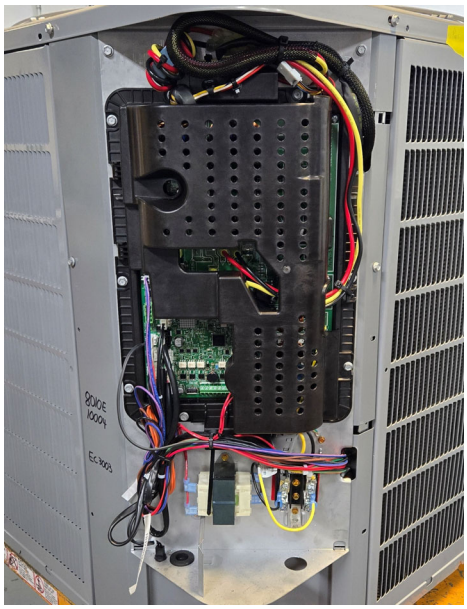

A260635

Fig. 31 – 249VAN Control Box

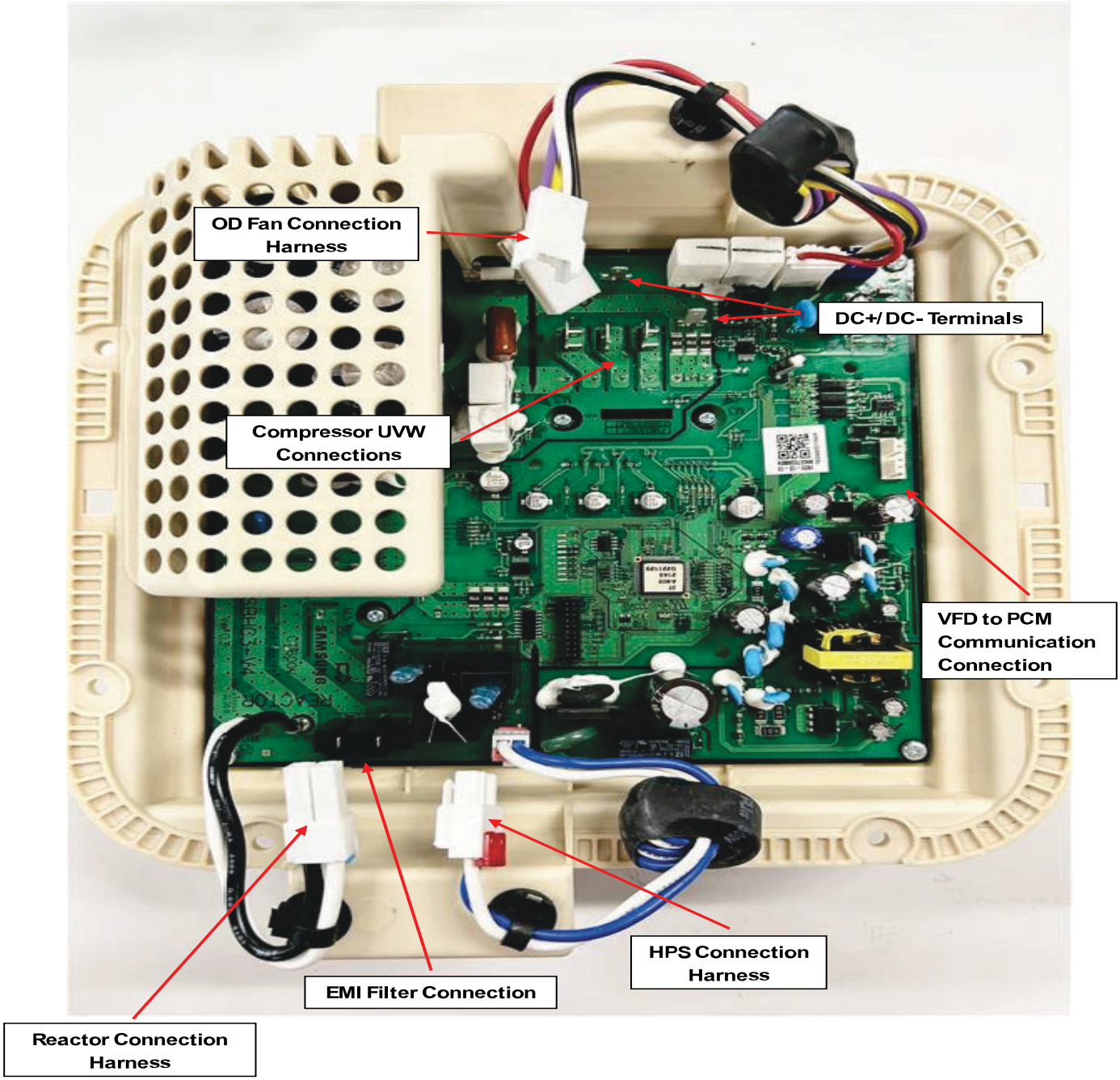

A250150

Fig. 32 – 191VAN and 290VAN 2T/3T VFD Connections

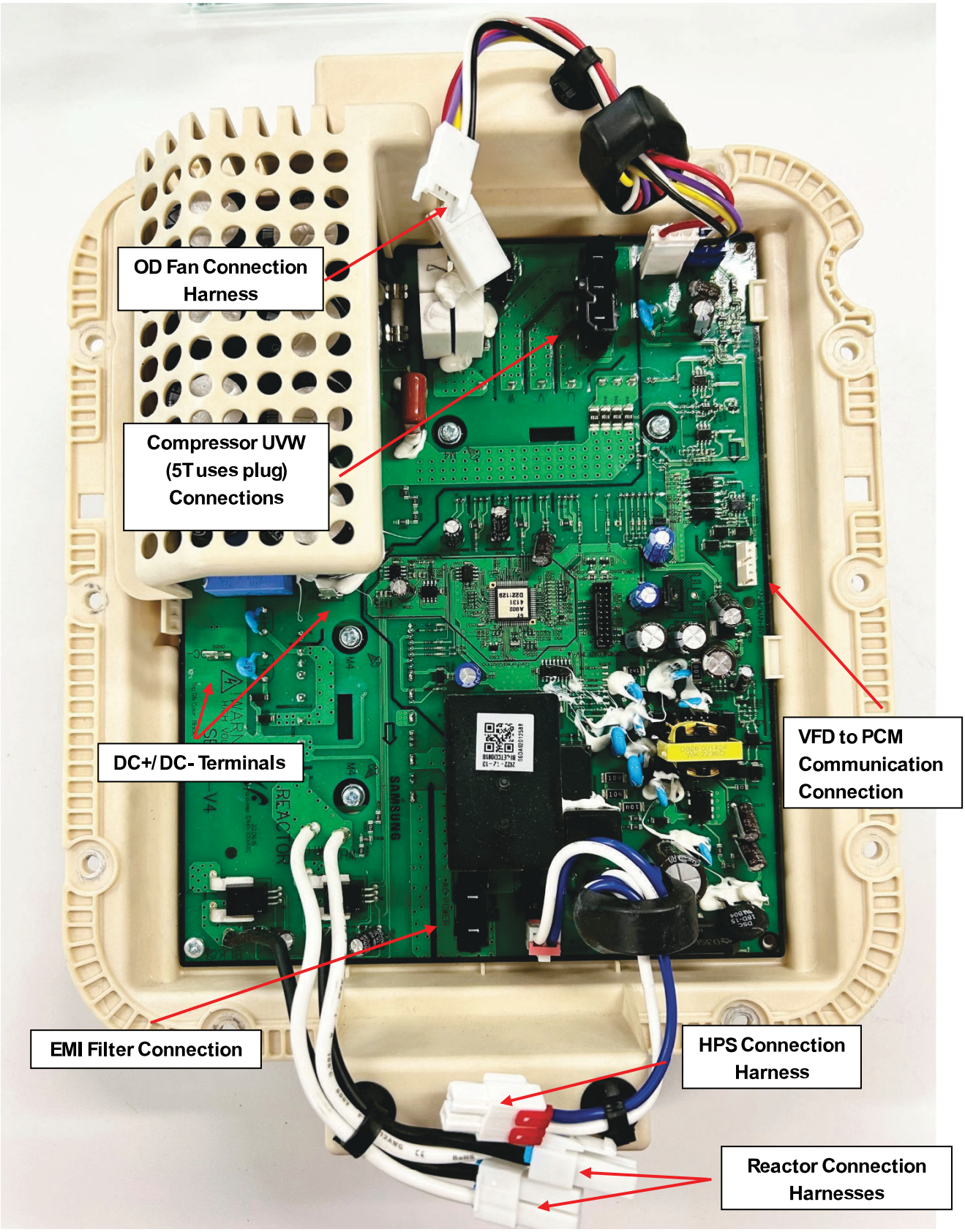

A250151

Fig. 33 – 191VAN and 290VAN 4/5T VFD Connections
Note: 4T uses separate terminals

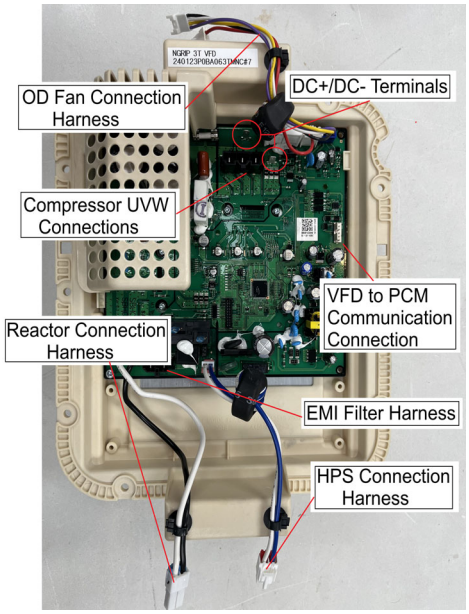

A260632

Fig. 34 – 293VAN 2/3T VFD Connections

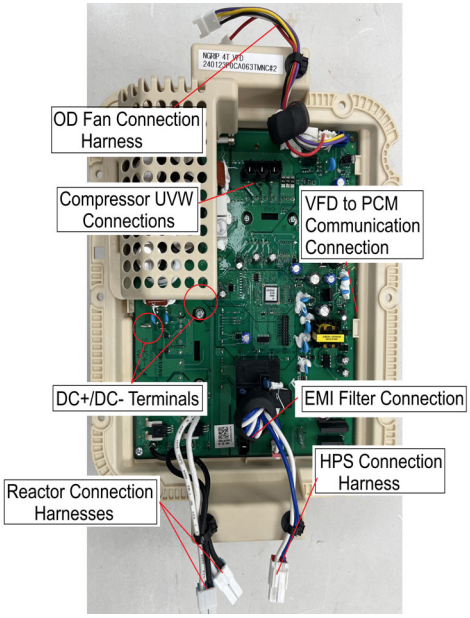

A260639

Fig. 35 – 293VAN 4/5T VFD Connections

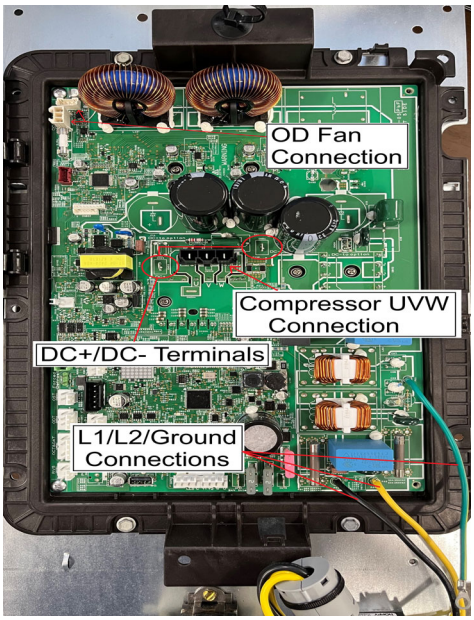

A260638

Fig. 36 – 249VAN VFD Connections

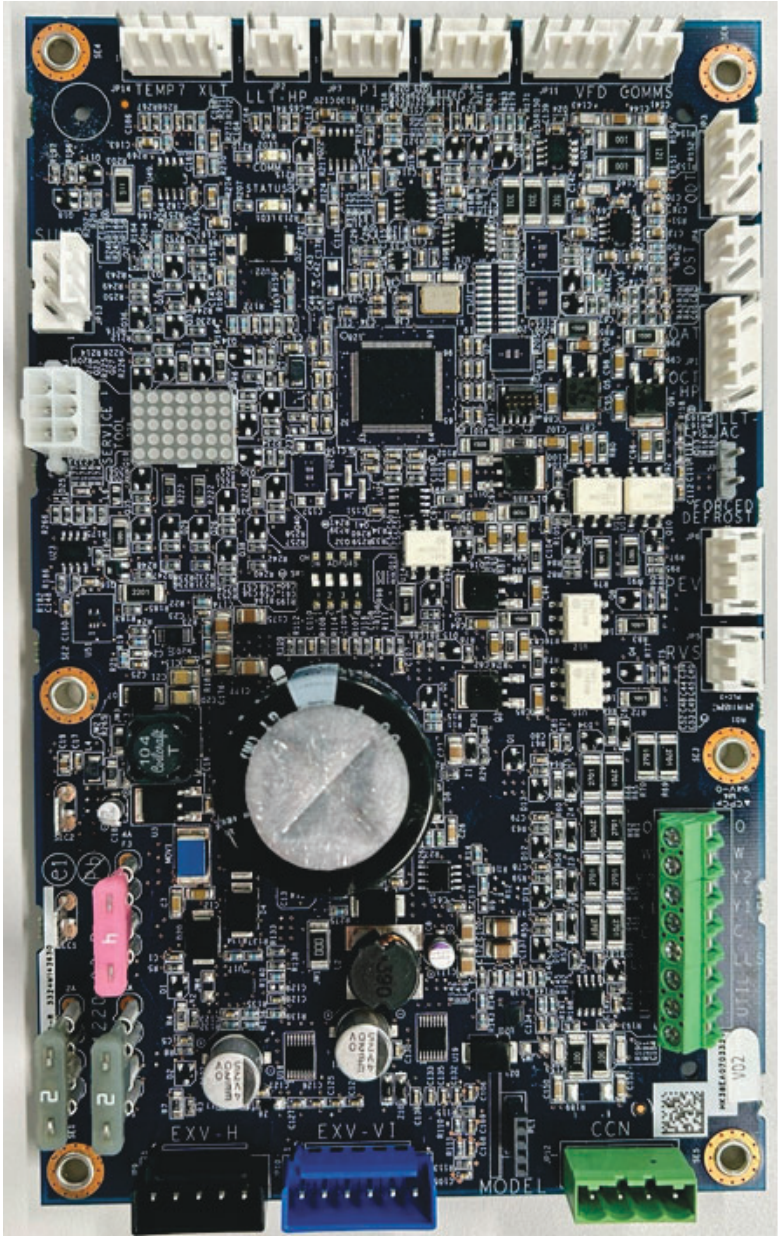

A250152

Fig. 37 – 191VAN/290VAN/291VAN/293VAN PCM (used on all models)

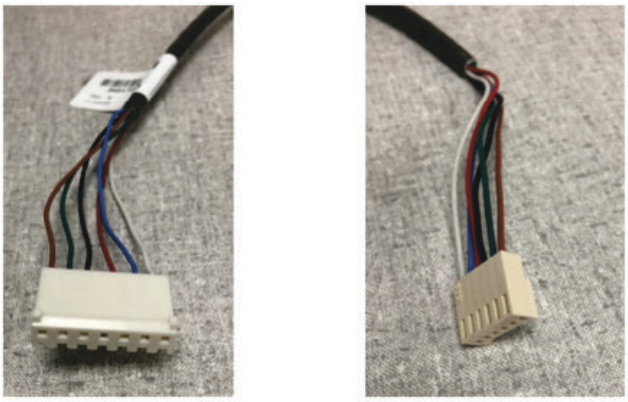

A250154

Fig. 38 – VFD to PCM Comm Cable (191VAN/290VAN/291VAN/293VAN models only)

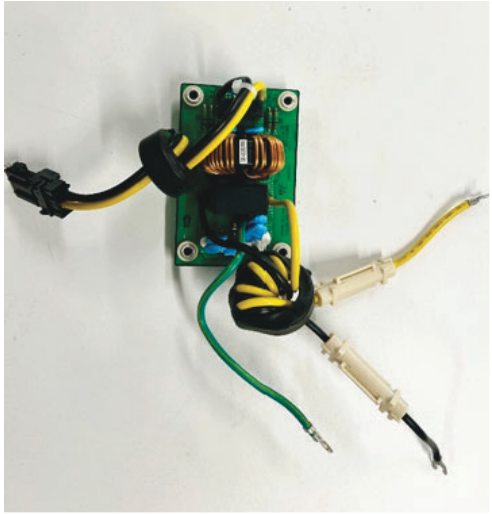

A250155

Fig. 39 – 191VAN/290VAN 2/3T EMI Filter

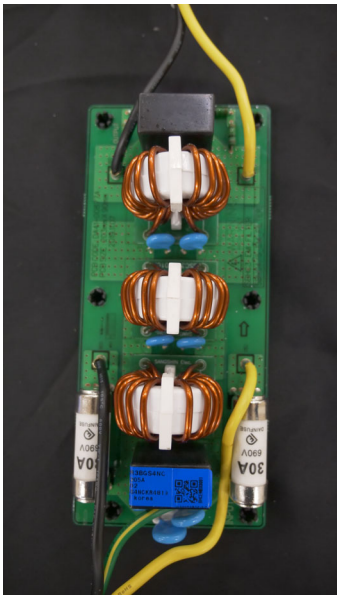

A200198

Fig. 40 – All Other 191VAN/290VAN/291VAN/293VAN EMI Filter (NOTE: Slight variations between models)

A250157

Fig. 41 – 191VAN/290VAN/293VAN 2/3T Reactor

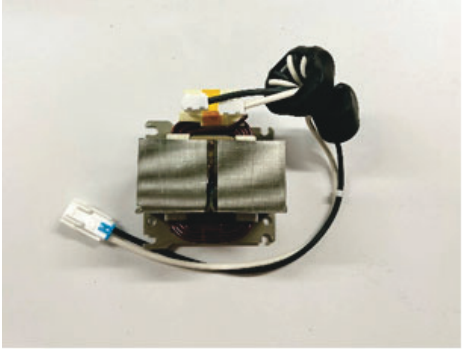

A250159

Fig. 42 – All Other 191VAN/290VAN/291VAN/293VAN Reactor (Note: Slight variations between models, not all reactors have chokes on harness)

A250160

Fig. 43 – 191VAN/290VAN 2T OD Fan Motor (150W)

A250161

Fig. 44 – All Other OD Fan Motor (250W)

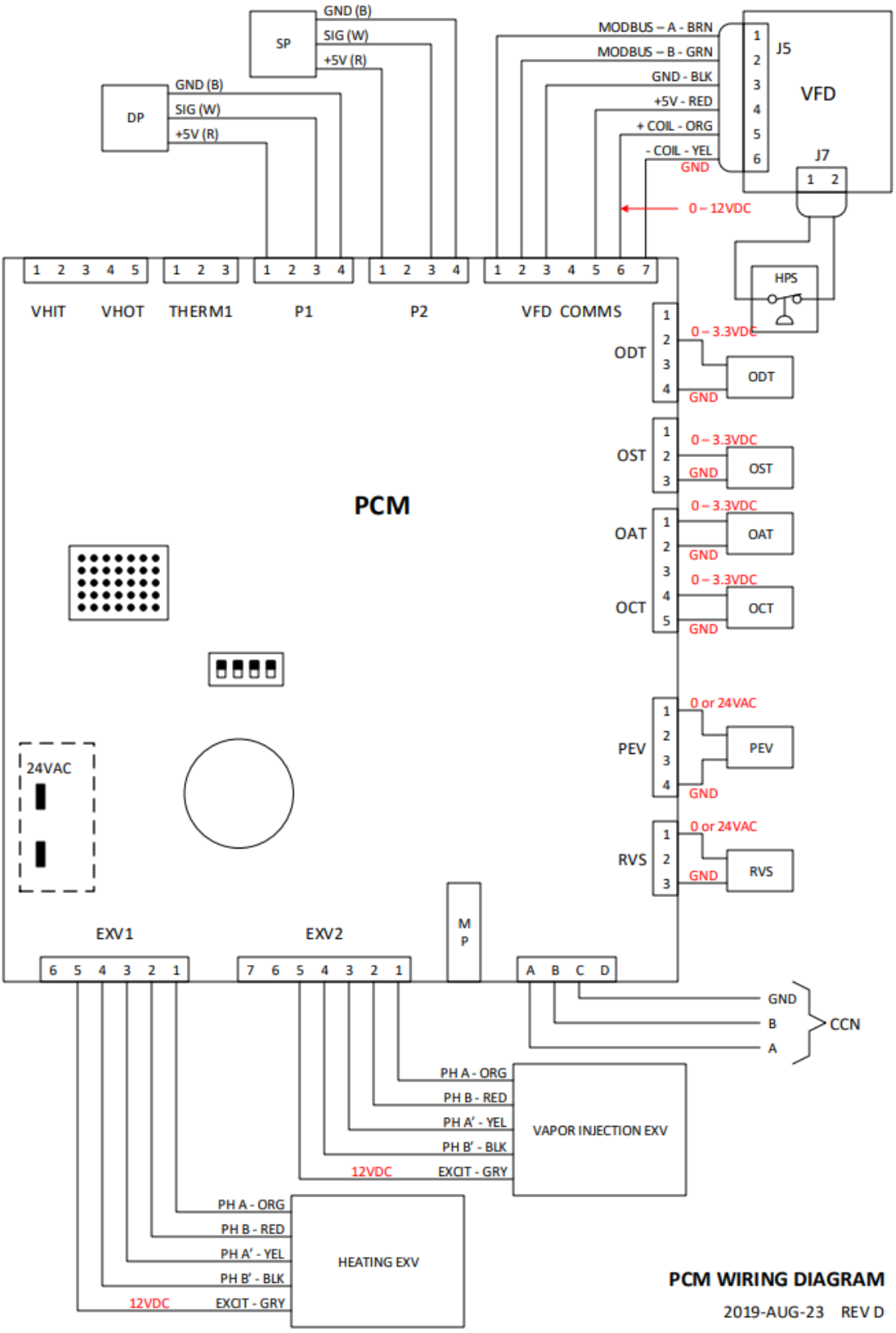

A200201

Fig. 45 – 191VAN/290VAN/291VAN/293VAN PCM Wiring Diagram

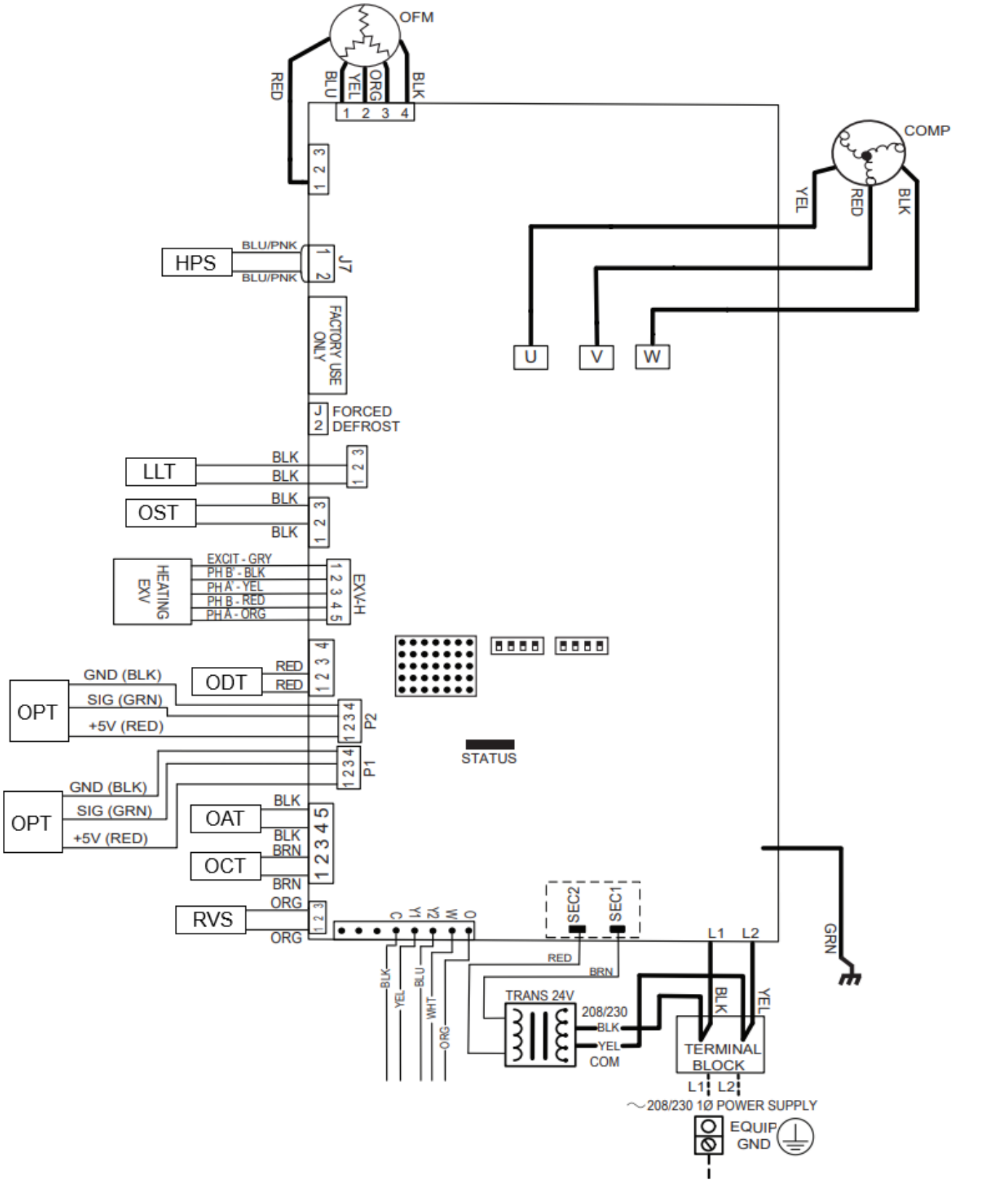

Fig. 46 – 249VAN PCM Wiring Diagram

REFRIGERATION SYSTEM

Refrigerant

⚠ WARNING

UNIT OPERATION AND SAFETY HAZARD

Failure to follow this warning could result in personal injury or death.

Puron Advance™ (R-454B) refrigerant systems operate at different conditions than Puron® (R-410A) and R-22 refrigerant systems. Do not use R-410A or R-22 service equipment or components on Puron Advance™ (R-454B) equipment. Ensure service equipment is rated for Puron Advance™ (R-454B) refrigerant.

In an air conditioning and heat pump system, refrigerant transfers heat from one place to another. The condenser is the outdoor coil in the cooling mode and the evaporator is the indoor coil.

In a heat pump, the condenser is the indoor coil in the heating mode and the evaporator is the outdoor coil.

In the typical air conditioning mode, compressed hot gas leaves the compressor and enters the condensing coil. As gas passes through the condenser coil, it rejects heat and condenses into liquid. The liquid leaves condensing unit through liquid line and enters metering device at evaporator coil. As it passes through metering device, it becomes a gas-liquid mixture. As it passes through indoor coil, it absorbs heat and the refrigerant moves to the compressor and is again compressed to hot gas, and cycle repeats.

Compressor Oil

IMPORTANT: Some models use PVE oil and some use POE oil. Confirm oil type on the compressor before servicing. Do not mix PVE and POE oils.

⚠ CAUTION

UNIT DAMAGE HAZARD

Failure to follow this caution may result in equipment damage or improper operation.

The compressor in a variable speed Puron Advance™ (R-454B) system uses either Polyvinyl Ether (PVE) or Polyolester (POE) oil. These oils are extremely hygroscopic, meaning it absorbs water readily. PVE and POE oils can absorb 15 times as much water as other oils designed for HCFC and CFC refrigerants. Take all necessary precautions to avoid exposure of the oil to the atmosphere.

Servicing Systems on Roofs With Synthetic Materials

Polyvinyl Ether (PVE) Polyolester (POE) compressor lubricants are known to cause long term damage to some synthetic roofing materials. Exposure, even if immediately cleaned up, may cause embrittlement (leading to cracking) to occur in one year or more. When performing any service which may risk exposure of compressor oil to the roof, take appropriate precautions to protect roofing. Procedures which risk oil leakage include but are not limited to compressor replacement, repairing refrigerants leaks, replacing refrigerant components such as filter drier, pressure switch, metering device, coil, accumulator, or reversing valve.

Synthetic Roof Precautionary Procedure

1. Cover extended roof working area with an impermeable polyethylene (plastic) drop cloth or tarp. Cover an approximate 10 x 10 ft area.
2. Cover area in front of the unit service panel with a terry cloth shop towel to absorb lubricant spills and prevent run-offs, and protect drop cloth from tears caused by tools or components.
3. Place terry cloth shop towel inside unit immediately under component(s) to be serviced and prevent lubricant run-offs through the louvered openings in the base pan.
4. Perform required service.
5. Remove and dispose of any oil contaminated material per local codes.

Brazing

This section on brazing is not intended to teach a technician how to braze. There are books and classes which teach and refine brazing techniques. The basic points below are listed only as a reminder.

Definition: The joining and sealing of metals using a nonferrous metal having a melting point over 800°F/426.6°C.

Flux: A cleaning solution applied to tubing or wire before it is brazed. Flux improves the strength of the brazed connection.

When brazing is required in the refrigeration system, certain basics should be remembered. The following are a few of the basic rules.

1. Always ensure system has been properly evacuated. Refer to Repairing Refrigerant Circuit section for specific evacuation steps.
2. Clean joints make the best joints. To clean:
   – Remove all oxidation from surfaces to a shiny finish before brazing.
   – Remove all flux residue with brush and water while material is still hot.
3. Silver brazing alloy is used on copper-to-brass, copper-to-steel, or copper-to-copper. Flux is required when using silver brazing alloy. Do not use low temperature solder.
4. Fluxes should be used carefully. Avoid excessive application and do not allow fluxes to enter into the system.
5. Brazing temperature of copper is proper when it is heated to a minimum temperature of 800°F and it is a dull red color in appearance.

⚠ WARNING

PERSONAL INJURY AND UNIT DAMAGE HAZARD

Failure to follow this warning could result in personal injury or equipment damage.

Never attempt to make repairs to existing service valves. Unit operates under high pressure. Damaged seats and o-rings should not be replaced. Replacement of entire service valve is required. Service valve must be replaced by properly trained service technician.

6. Care must be taken to prevent copper braze joint splatter onto aluminum coils and system components.
   – Use metal shield to cover aluminum coil, headers, and distributors.

Aluminum Brazing

This field repair procedure is intended for aluminum coil product group that have acquired mechanical damage. This procedure is limited to repairing self-tapping screw holes and punctures, not to exceed 0.182” along its largest axis if non circular, and 0.182” diameter if circular. Brazing kit p/n 337748-751 is available from RC.

Coil replacement is needed if at least one of the following is present:

- Corrosion cracks and burst cracks
- A singular tube with more than 2 holes
- Holes that exceed 0.182 inch largest axis if non circular and 0.182 inch diameter If circular.

The key to brazing aluminum is watching the flame change in color. Any fuel gas/oxygen flame in the neutral state will produce a flame that is a shade of blue. As the aluminum heats up to temperature, you will see the flame change in color to red/orange.

The change in color indicates the base metal is at temperature ready for braze material. Continuing to apply heat will not change the color and will melt the base metal.

The braze alloys should not have direct contact with the flame. In cored wire filler metals, you will notice that the filler metal will melt away exposing the flux. The flux change in state is from white liquid, to dry white, to clear liquid. The change in state of flux coincides with the flame change in color. The addition of flux will minimize the flame change in color. The alloy is ready to apply when the flux is in the clear state.

Most aluminum alloys melt at 1200°F, and the braze materials melt between 905°F and 1080°F. The zinc alloys (ZA-1) melt at a lower temperature while alloys which have more aluminum content melt at a higher temperature.

Materials:

1. 78/22 braze alloy Channel Flux ZA-1, Harris AlGroove900 cored wire
2. Flux CX-60 Omni / Lucas product
3. Stainless steel wire brushes small handle / rotary brush
4. Turbo-Torch equipment

Aluminum Brazing Instructions:

1. Clean area to be brazed
   a. Joint must be free of oil, grease, rust, corrosion, and refrigerant.
2. Wire brush to remove oxides from area
3. Flux area if required with the CX-60 flux. Cored wire alloys will not need fluxing.
   a. Additional flux with cored filler will aid in dirty conditions
4. Depending on thickness of material, select an appropriate torch tip size.
   a. Turbo torch standard nozzles work well for aluminum repair
      NOTE: It is important to size the torch tip to the thickness of material. Example: too large a torch tip will melt the aluminum base metal before you are able to repair it.
5. Heat area until flux turns clear or you see flame change in color.
6. Continue to heat the joint and test by wiping the braze rod across the joint.
7. Once the alloy melts on the parent metal add alloy to repair the area. Maintain joint temperature until repair is complete. Do not over heat. (withdraw torch as required)
8. It is best to repair the area the first time. Reheating can cause failure to repair the area.
9. If reheating is necessary, let joint cool, wire brush, reapply flux. Reheat joint so flux melts and reapply braze material.

Service Valves and Pump Down

Service valves provide a means for holding original factory charge in outdoor unit prior to hookup to indoor coil. They also contain gauge ports for measuring system pressures and provide shutoff convenience for certain types of repairs.

The service valve is a front-seating valve, which has a service port that contains a Schrader fitting. The service port is always pressurized after the valve is moved off the front-seat position.

The service valves in the outdoor unit come from the factory front-seated. This means that the refrigerant charge is isolated from the line-set connection ports. The interconnecting tubing (line set) can be brazed to the service valves using industry accepted methods and materials. Consult local codes.

Before brazing the line set to the valve, the ends of the sweat connections on the service valves must be cleaned so that no brass plating remains on either the inside or outside of the bell joint. To prevent damage to the valve and/or cap “O” ring, use a wet cloth or other acceptable heat-sinking material on the valve before brazing.

IMPORTANT: To prevent damage to the unit, use a metal barrier or shield between brazing area and unit. This is particularly critical when brazing on system that has an aluminum coil.

After the brazing operation and the refrigerant tubing and evaporator coil have been evacuated, the valve stem can be turned counterclockwise until back-seats, which releases refrigerant into tubing and evaporator coil. The system can now be operated.

The service valve-stem cap is tightened to 20 ± 2 ft/lb torque and the service-port caps to finger tight. Always remember to reinstall the red service port caps when service is complete. The seating surface of the valve stem has a knife-set edge against which the caps are tightened to attain a metal-to-metal seal.

Mechanical Line Set Connections

If using mechanical or crimp-type line set connections, follow crimp tool manufacturer's instructions.

NOTE: Should the use of mechanical fittings cause failure of the fittings or failure of the equipment, such would not be covered under the equipment limited warranty.

The service valve cannot be field repaired; therefore, only a complete valve or valve stem and service-port caps are available for replacement.

If the service valve is to be replaced, a metal barrier must be inserted between the valve and the unit to prevent damaging the unit exterior from the heat of the brazing operations.

⚠ CAUTION

PERSONAL INJURY HAZARD

Failure to follow this caution may result in personal injury.

Wear safety glasses, protective clothing, and gloves when handling refrigerant.

Step 1 – Pump Down & Evacuation

191VAN and 290VAN291VAN/293VAN/

Because this system has a VFD controlled compressor the conventional procedure cannot be used to "pump down" and isolate the refrigerant into the outdoor unit. The Evolution™ Connex™ System Control has provisions to assist in performing this function.

1. Connect gauges to liquid and vapor or suction capillary service ports to monitor operating pressures during and at completion of the procedure.
2. In the "installation and service" menu of the Evolution™ Connex™ System Control (see Fig. 47), go to "refrigerant charging" and then "pump down" (see Fig. 48 and Fig. 49).
3. Pump down in COOL mode allows refrigerant to be isolated in outdoor unit. Set desired time period. Default time period for the procedure is 20 minutes. See Fig. 50.
4. Select Start on Evolution™ Connex™ System Control to begin the pump down process. Unit will begin running in cooling mode after a brief delay and a status screen will be displayed. See Fig. 51.
5. Close the liquid service valve.
6. The unit will run with the low pressure protection set to indicate pump down is complete when the suction pressure drops below 20 psig. Compressor protections are still active to prevent damage to the compressor or VFD (high pressure, high current, etc.).
7. Once system indicates pump down complete or failure to complete shutdown, close vapor service valve.
8. A recovery system will be required to remove final quantity of refrigerant from indoor coil and line set. Refer to Service Manual for specific evacuation and purge steps required after recovering refrigerant and before making any repairs to the indoor unit or lineset.
9. Remove power from indoor and outdoor unit prior to servicing unit.

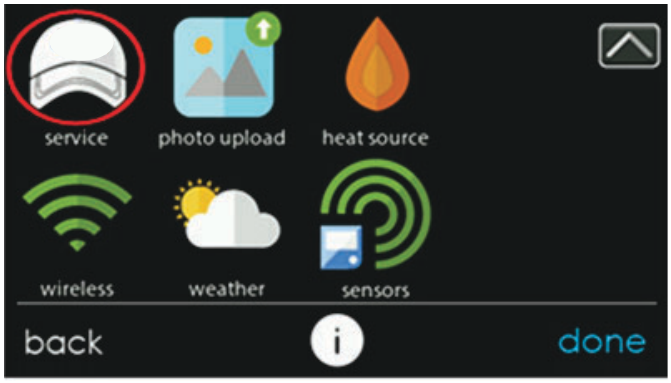

Fig. 47 – Entering Installation and Service Menu A200029

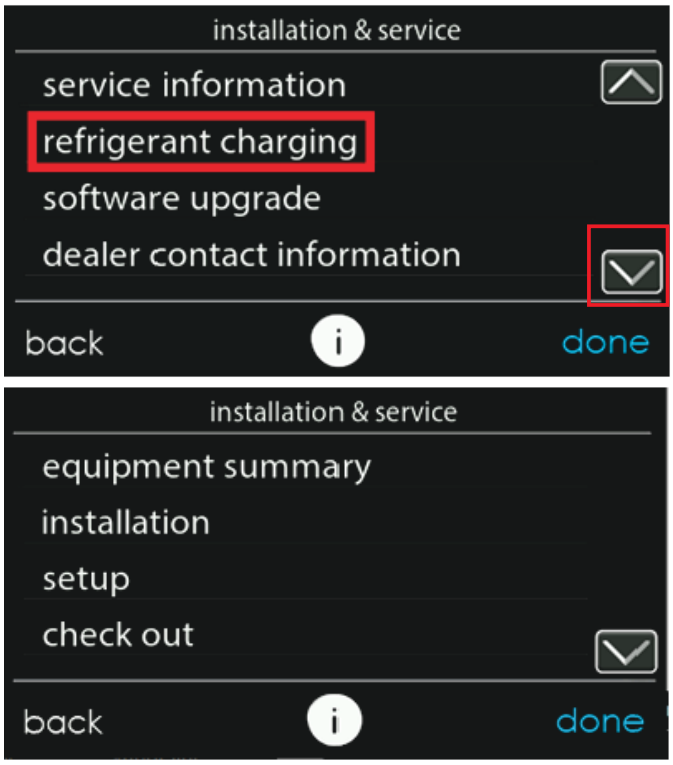

Fig. 48 – Installation and Service Menu A200030

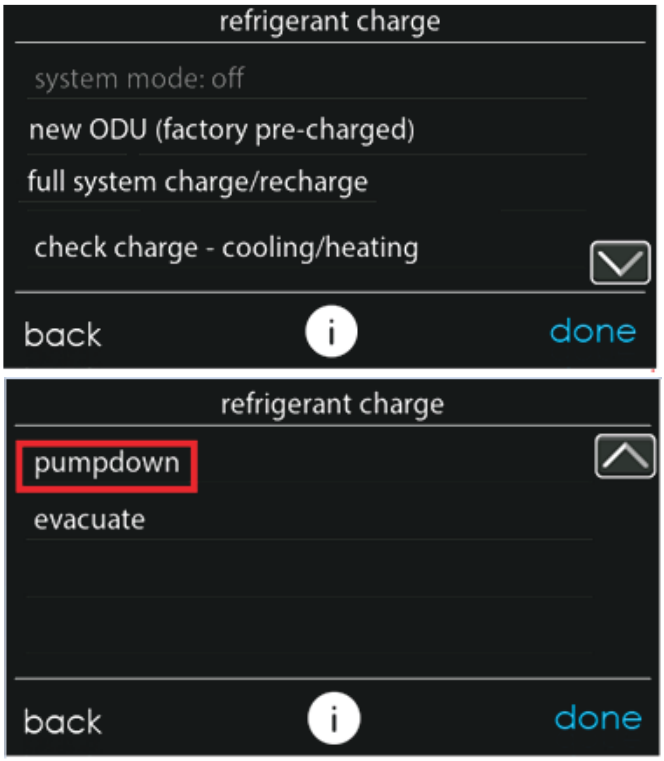

Fig. 49 – Pump Down and Evacuation Selection A240378

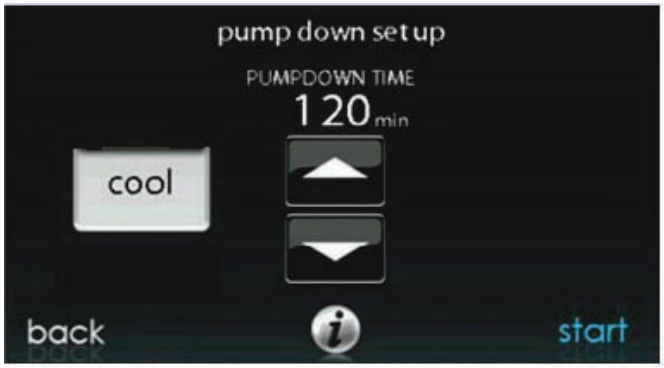

A240390

Fig. 50 – Pump Down Setup Screen

A240342

Fig. 51 – Pump Down Active Screen

Evacuation and Recovery of Refrigerant from within

(191VAN and 290VAN/291VAN/293VAN Models)

Because this system has an EXV for the heating expansion device, additional steps must be taken to open the EXV if the heat pump unit must be evacuated for service reasons. If the EXV is not open when pulling a vacuum or recovering refrigerant from the heat pump unit, extended evacuation time may be required and/or inadequate vacuum obtained. The Evolution™ Connex™ System Control has provisions to open the EXV for refrigerant recovery and/or evacuation.

1. Connect gauges to liquid and vapor or suction capillary service ports to monitor operating pressures during and at completion of the procedure. Attach recovery system or vacuum pump to gauge set as needed for the service procedure. The service valves must be open to evacuate the unit through the line set service ports. The suction capillary service port is a direct connection to the suction port of the compressor.
2. In the "installation and service" menu of the Evolution™ Connex™ System Control (see Fig. 47), go to "refrigerant charging" and then "evacuation".
3. Set desired time period. Default time period for the procedure is 20 minutes. See Fig. 52.
4. Select START on Evolution™ Connex™ System Control to open the valve.
5. Begin evacuation or refrigerant recovery as required for the procedure after Evolution™ Connex™ System Control indicates the EXV is open. Power may be removed from heat pump after the Evolution™ Connex™ System Control indicates "READY TO EVACUATE." See Fig. 53.
6. Remove power from indoor and heat pump unit prior to servicing unit. The EXV will retain the open position.

NOTE: See service training materials for troubleshooting the EXV using EXV CHECK mode.

A200042

Fig. 52 – Evacuation Setup Screen

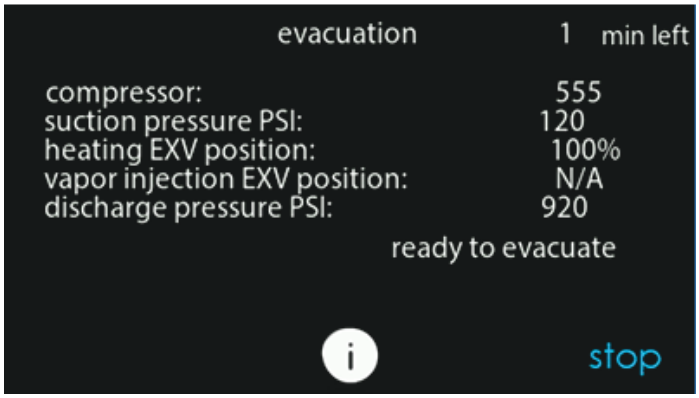

A20043

Fig. 53 – Evacuation Status Screen

Refrigerant Charging Mode

(249VAN Models)

249VAN models have 8 dip switches on the PCM control board. Switch 1 is the Refrigerant Charging Mode

Switching the Refrigerant Charging Modes switch to HIGH will cause the 5×7 LED display to scroll the following data: CCC, HCC, EVAC, and PUMP. These correspond to the following modes: Cooling Check Charge, Heating Check Charge, Evacuation, and Pumpdown.

Switching the Refrigerant Charging Modes switch to LOW while the desired mode is scrolling will select and enter that mode of operation. If no mode is selected, the scrolling will timeout after 60 seconds. At that point the switch should be moved back to the LOW position.

To exit one of the Refrigerant Charging Modes, switch the Refrigerant Charging Modes switch from LOW to HIGH. That will put the system into normal operation. At that point the scrolling will timeout after 60 seconds and the switch should be moved back to the LOW position.

Pump Down (PUMP) & Evacuation (EVAC)

(249VAN Models)

Because this system has a VFD controlled compressor, the conventional procedure cannot be used to "pump down" and isolate the refrigerant into the outdoor unit. The PCM control board has provisions to assist in performing this function.

1. Connect gauges to liquid and vapor or suction capillary service ports to monitor operating pressures during and at completion of the procedure.
2. Select PUMP by switching the Refrigerant Charging Modes switch to LOW.
3. The unit will begin running in cooling mode after a brief delay.
4. Close the liquid service valve.
5. The unit will run with the low-pressure protection set to indicate pump down is complete when the suction pressure drops below 20 psig. Compressor protections are still active to prevent damage to the compressor over VFD (high pressure, high current, etc.).
6. Once the system indicates pump down complete or failure to complete shutdown, close the vapor service valve.
7. A recovery system will be required to remove final quantity of refrigerant from indoor coil and line set. Refer to the Service Manual for specific evacuation and purge steps required after recovering refrigerant and before making any repairs to the indoor unit or lineset.
8. Remove power from indoor and outdoor unit prior to servicing unit.

Evacuation and Recovery of Refrigerant (EVAC)

(249VAN Models)

Because this system has an EXV for the heating expansion device, additional steps must be taken to open the EXV if the heat pump unit must be evacuated for service reasons. The EXV is not open when pulling a vacuum or recovering refrigerant from the heat pump unit. Extended evacuation time may be required and/or inadequate vacuum obtained. The PCM control board has provisions to open the EXV for refrigerant recovery and/or evacuation.

1. Connect gauges to liquid and vapor or suction capillary service ports to monitor operating pressures during and at completion of the procedure. Attach recovery system or vacuum pump to gauge set as needed for the service procedure. The service valves must be open to evacuate the unit through the line set service ports. The suction capillary service port is a direct connection to the suction port of the compressor.
2. Select EVAC by switching the Refrigerant Charging Modes switch to LOW.
3. Begin evacuation or refrigerant recovery as required for the procedure.
4. Remove power from indoor and heat pump unit prior to servicing unit. The EXV will retain the open position.

Reversing Valve

In heat pumps, changeover between heating and cooling modes is accomplished with a valve that reverses flow of refrigerant in system. This reversing valve device is easy to troubleshoot and replace. The reversing valve solenoid can be checked with power off with an ohmmeter. Check for continuity and shorting to ground. With control circuit (24v) power on, check for correct voltage at solenoid coil. Check for overheated solenoid.

NOTE: Reversing valve diagnostic can only detect an open coil when reversing valve is not energized, thus a damaged coil during cooling operation will not trigger diagnostic. In this case the HP will operate in heating mode when wall controller is requesting cooling operation. Manual troubleshooting of coil will be required to confirm failure.

With unit operating, other items can be checked, such as frost or condensate water on refrigerant lines.

The sound made by a reversing valve as it begins or ends defrost is a "whooshing" sound, as the valve reverses and pressures in system equalize. An experienced service technician detects this sound and uses it as a valuable troubleshooting tool.

Using a remote measuring device, check inlet and outlet line temperatures. DO NOT touch lines. If reversing valve is operating normally, inlet and outlet temperatures on appropriate lines should be close to each other. Any difference would be due to heat loss or gain across valve body. Temperatures are best checked with a remote reading electronic-type thermometer with multiple probes. Route thermocouple leads to inside of coil area through service valve mounting plate area underneath coil. Fig. 54 and Fig. 55 show test points (TP) on reversing valve for recording temperatures. Insulate points for more accurate reading.If valve is defective:

1. Shut off all power to unit and remove charge from system.
2. Remove solenoid coil from valve body. Remove valve by cutting it from system with tubing cutter. Repair person should cut in such a way that stubs can be easily re-brazed back into system. Do not use hacksaw. This introduces chips into system that cause failure. After defective valve is removed, wrap it in wet rag and carefully un-braze stubs. Save stubs for future use. Because defective valve is not overheated, it can be analyzed for cause of failure when it is returned.
3. Braze new valve onto used stubs. Keep stubs oriented correctly. Scratch corresponding matching marks on old valve and stubs and on new valve body to aid in lining up new valve properly. When brazing stubs into valve, protect valve body with wet rag to prevent overheating.
4. Use slip couplings to install new valve with stubs back into system. Even if stubs are long, wrap valve with a wet rag to prevent overheating.
5. After valve is brazed in, check for leaks. Evacuate and charge system. Operate system in both modes several times to be sure valve functions properly and in the expected mode. A valve that has been incorrectly installed backwards will operate in cooling when de-energized and in heating when energized. Never leave service call after replacing RVS and charging system prior to verifying mode operation.

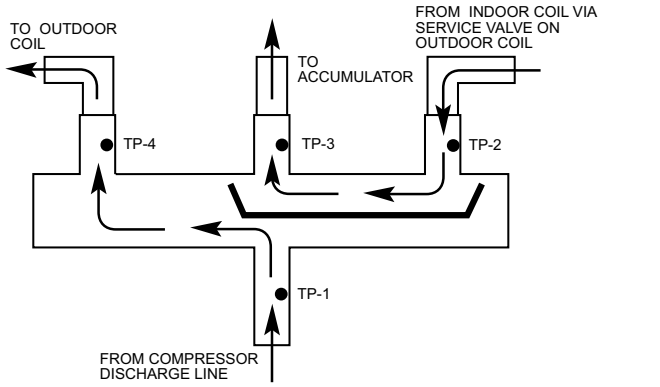

A88342

Fig. 54 – Reversing Valve
(Cooling mode or defrost mode, solenoid energized)

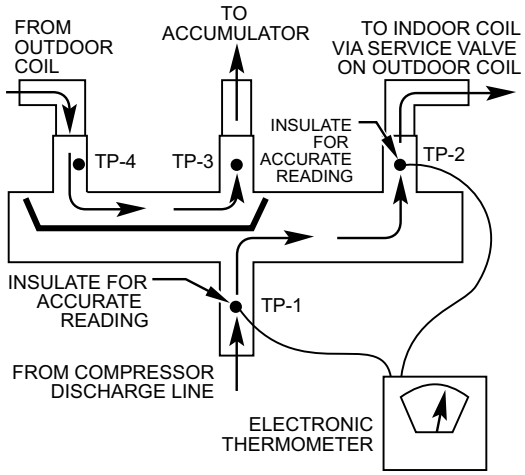

A88341

Fig. 55 – Reversing Valve
(Heating Mode, solenoid de-energized)

Liquid Line Filter Drier

Filter driers are specifically designed for R-22, Puron (R-410A) or Puron Advance™ (R-454B) refrigerant. Only operate with the appropriate drier using factory authorized components.

It is recommended that the liquid line drier be installed at the indoor unit for all models.

⚠ CAUTION

UNIT DAMAGE HAZARD

Failure to follow this caution may result in equipment damage or improper operation.

To avoid performance loss and compressor failure, installation of filter drier in liquid line is required.

⚠ CAUTION

UNIT DAMAGE HAZARD

Failure to follow this caution may result in equipment damage or improper operation.

To avoid filter drier damage while brazing, filter drier must be wrapped in a heat-sinking material such as a wet cloth.

Install Liquid-Line Filter Drier - Indoor

Refer to Fig. 56 and install filter drier as follows: on all models except 293VAN060 and 291VAN054 models.

1. Braze 5-in. (127 mm) liquid tube to the indoor coil.
2. Wrap filter drier with damp cloth.
3. Braze filter drier to above 5-in. (127 mm) liquid tube.
4. Connect and braze liquid refrigerant tube to the filter drier.

⚠ CAUTION

UNIT DAMAGE HAZARD

Failure to follow this caution may result in unit damage or improper operation.

Installation of filter drier in liquid line is required. Filter drier must be wrapped in a heat-sinking material such as a wet cloth while brazing

Refer to Fig. 57 and install filter drier as follows on 293VAN060 and 291VAN054 models:

1. After wrapping the liquid service valve with a wet cloth braze 5-in. (127 mm) liquid tube to the liquid service valve on outdoor unit.
2. Wrap filter drier with damp cloth.
3. Braze filter drier to above 5-in. (127 mm) liquid tube.
4. Connect and braze liquid refrigerant tube to the filter drier

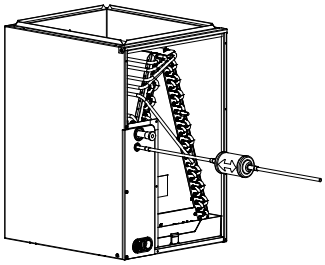

A05227

Fig. 56 – Liquid-Line Filter Drier

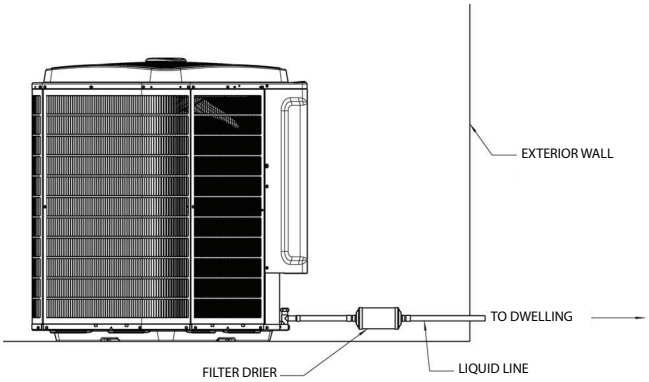

A200082

Fig. 57 – Liquid-Line Filter Drier

Suction Line Filter Drier

The suction line drier is specifically designed to operate with Puron Advance™ (R-454B) Refrigerant, use only factory authorized components. Suction line filter drier is used in cases where acid might occur, such as burnout. Heat pump units must have the drier installed between the compressor and accumulator only. Remove after 10 hours of operation. Never leave suction line filter drier in a system longer than 72 hours (actual time).

Thermostatic Expansion Valve (TXV)

All fan coils and furnace coils will have a factory installed thermostatic expansion valve (TXV). The TXV will be a bi-flow, hard-shutoff with an external equalizer and a balance port pin. A hard shut-off TXV does not have a bleed port. Therefore, minimal equalization takes place after shutdown. TXVs are specifically designed to operate with R-22, Puron (R-410A) or Puron Advance™ (R-454B) refrigerant, use only factory authorized TXVs. **Do not interchange R-22, Puron (R-410A) or Puron Advance (R-454B) TXVs.**

TXV Operation

The TXV is a metering device that is used in air conditioning and heat pump systems to adjust to changing load conditions by maintaining a preset superheat temperature at the outlet of the evaporator coil. The volume of refrigerant metered through the valve seat is dependent upon the following:

1. Superheat temperature is sensed by cap tube sensing bulb on suction tube at outlet of evaporator coil. This temperature is converted into pressure by refrigerant in the bulb pushing downward on the diaphragm which opens the valve via the push rods.
2. The suction pressure at the outlet of the evaporator coil is transferred via the external equalizer tube to the underside of the diaphragm. This is needed to account for the indoor coil pressure drop. Residential coils typically have a high pressure drop, which requires this valve feature.
3. The pin is spring loaded, which exerts pressure on the underside of the diaphragm. Therefore, the bulb pressure works against the spring pressure and evaporator suction pressure to open the valve. If the load increases, the temperature increases at the bulb, which increases the pressure on the top side of the diaphragm. This opens the valve and increases the flow of refrigerant. The increased refrigerant flow causes the leaving evaporator temperature to decrease. This lowers the pressure on the diaphragm and closes the pin. The refrigerant flow is effectively stabilized to the load demand with negligible change in superheat.

Accumulator

The accumulator is specifically designed to operate with Puron (R-410A) or Puron Advance™ (R-454B); use only factory-authorized components. Under some light load conditions on indoor coils, liquid refrigerant is present in suction gas returning to compressor. The accumulator stores liquid and allows it to boil off into a vapor so it can be safely returned to compressor. Since a compressor is designed to pump refrigerant in its gaseous state, introduction of liquid into it could cause severe damage or total failure of compressor.

The accumulator is a passive device which seldom needs replacing. Occasionally its internal oil return orifice or bleed hole may become plugged. Some oil is contained in refrigerant returning to compressor. It cannot boil off in accumulator with liquid refrigerant. The bleed hole allows a small amount of oil and refrigerant to enter the return line where velocity of refrigerant returns it to compressor. If bleed hole plugs, oil is trapped in accumulator, and compressor will eventually fail from lack of lubrication. The accumulator must be changed If bleed hole is plugged, The accumulator has a fusible element located in the bottom end bell. (See Fig. 58.) that will melt at 430°F//221°C and vent the refrigerant if this temperature is reached either internal or external to the system. If fuse melts, the accumulator must be replaced.

To change accumulator:

1. Shut off all power to unit.
2. Safely remove the refrigerant using a recovery pump certified for flammable refrigerants.
3. Purge the refrigerant circuit with nitrogen gas.
4. Evacuate the refrigerant circuit to 1500 microns.
5. Break vacuum with a nitrogen purge of the refrigerant circuit ensuring that the outlet of the vacuum pump is not near a potential ignition source. Do not exceed 5 psig.

NOTE: Coil may be removed for access to accumulator. Refer to appropriate sections of Service Manual for instructions.

⚠ CAUTION

PERSONAL INJURY HAZARD

Failure to follow this caution may result in personal injury.

Wear safety glasses, protective clothing, and gloves when handling refrigerant.

6. Remove accumulator from system with tubing cutter.
7. Tape ends of open tubing.
8. Scratch matching marks on tubing studs and old accumulator. Scratch matching marks on new accumulator. Un-braze stubs from old accumulator and braze into new accumulator.
9. Thoroughly rinse any flux residue from joints and paint with corrosion-resistant coating such as zinc-rich paint.
10. Install factory authorized accumulator into system with copper slip couplings.
11. Evacuate and charge system.

Pour and measure oil quantity (if any) from old accumulator. If more than 20 percent of oil charge is trapped in accumulator, add new PVE oil to compressor to make up for this loss.

⚠ WARNING

ELECTRICAL SHOCK HAZARD

Failure to follow this warning could result in personal injury or death.

Before installing, modifying, or servicing system, main electrical disconnect switch must be in the OFF position. There may be more than 1 disconnect switch. Lock out and tag switch with a suitable warning label.

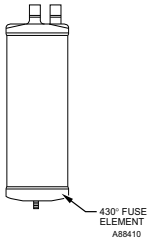

A88410

Fig. 58 – Accumulator

Vapor Injection Operation (on select models)

Some Evolution™ models contain an additional refrigeration circuit known as a vapor injection circuit. When active this circuit will increase the capacity of the outdoor unit with a minimal increase in power consumption. The result is higher capacity at a higher efficiency.

The vapor injection circuit routes a portion of the subcooled liquid from the condenser through a vapor injection EXV (EXV-VI) and into a brazed-plate heat exchanger (BPHX) The resulting superheated vapor will return to the compressor and be “injected” into the mid port. Meanwhile subcooled liquid leaving the condenser is routed through the other portion of the BPHX and is further subcooled before exiting to the evaporator section of system, thus improving the capacity.

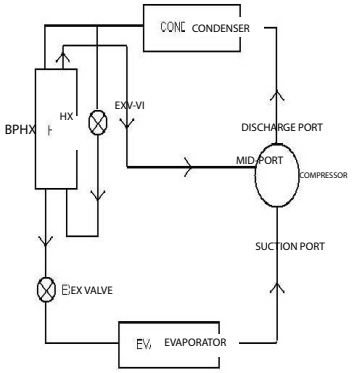

A200183

Fig. 59 – Vapor Injection Operation

REFRIGERATION SYSTEM REPAIR

Repair work should be started under a controlled procedure in an open area or an area that is sufficiently ventilated throughout the work period and all persons in the vicinity must be informed about the nature of work being performed.

A dry powder or CO_2 Fire extinguisher must be present adjacent to the charging area and anyone working on exposed pipework must not use any sources of ignition in a manner that might lead to the risk of fire and explosion. The site of installation, repair, removal or disposal must be inspected to ensure no flammable hazard or ignition risks are present and all possible ignition sources including Cigarette smoking must be kept far away. NO SMOKING signs shall be displayed.

Leak Detection

New installations should be checked for leaks prior to complete charging. If a system has lost all or most of its charge, system must be pressurized again to approximately 150 psi minimum and 375 psi maximum. This can be done by adding refrigerant using normal charging procedures or by pressurizing system with nitrogen (less expensive than refrigerant). Nitrogen also leaks faster than refrigerants. Nitrogen cannot, however, be detected by an electronic leak detector. (See Fig. 60.)

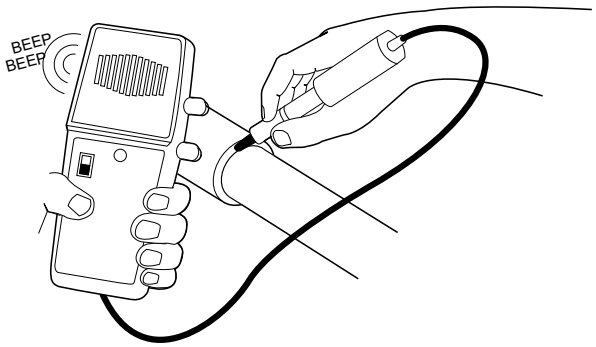

A95422

Fig. 60 – Electronic Leak Detection

⚠ WARNING

PERSONAL INJURY AND UNIT DAMAGE HAZARD

Failure to follow this warning could result in personal injury or death.

Due to the high pressure of nitrogen, it should never be used without a pressure regulator on the tank.

⚠ WARNING

PERSONAL INJURY AND/OR FIRE HAZARD

Failure to follow this warning could result in personal injury and/or fire.

For searching and detecting refrigerant leaks, possible sources of ignition such as halide torch or any other detector with a naked flame should not be used under any circumstance.

Assuming that a system is pressurized with either all refrigerant or a mixture of nitrogen and refrigerant, leaks in the system can be found with an electronic leak detector that is capable of detecting specific refrigerants.

For flammable refrigerant, the electronic leak detector may not be accurate or it might need re-calibration in a refrigerant free area. The leak detector should be set at a percentage of the refrigerant's Lower Flammability Limit (LFL).

If system has been operating for some time, first check for a leak visually. Since refrigerant carries a small quantity of oil, traces of oil at any joint or connection is an indication that refrigerant is leaking at that point.

A simple and inexpensive method of testing for leaks is to use soap bubbles or detergent but do not use detergents containing chlorine as the chlorine might react with the flammable refrigerant and corrode the copper pipe-work (See Fig. 61). Any solution of water and soap may be used. Soap solution is applied to all joints and connections in system. A small pinhole leak is located by tracing bubbles in soap solution around leak. If the leak is very small, several minutes may pass before a bubble will form. Popular commercial leak detection solutions give better, longer-lasting bubbles and more accurate results than plain soapy water. The bubble solution must be removed from the tubing and fittings after checking for leaks as some solutions may corrode the metal.

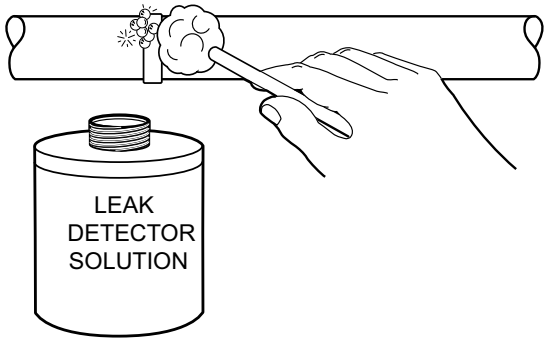

A95423

Fig. 61 – Bubble Leak Detection

You may use an electronic leak detector designed for specific refrigerant to check for leaks (See Fig. 60). This unquestionably is the most efficient and easiest method for checking leaks. There are various types of electronic leak detectors. Check with manufacturer of equipment for suitability. Generally speaking, they are portable, lightweight, and consist of a box with several switches and a probe or sniffer. Detector is turned on and probe is passed around all fittings and connections in system. Leak is detected by either the movement of a pointer on detector dial, a buzzing sound, or a light.

In all instances when a leak is found, system charge must be recovered or isolated using shut-off valves and leak repaired before final charging and operation.

The Following procedures should be followed for flammable refrigerants

1. The refrigerant must be safely removed and recovered into correct cylinders if venting isn't allowed by local and national codes.
2. The system is purged a couple of times to make it safe for flammable refrigerants.
   Purging happens by:
   - Breaking the vacuum in the system with oxygen free nitrogen
   - Continuing to fill it up until working pressure is achieved, followed by venting to atmosphere,
   - Pulling down to a vacuum.
   - Repeat the process until all the refrigerant has left the system
   - Finally, vent down the system to atmospheric pressure before starting the work.

NOTE: This entire purging process is not optional for A2L.

3. Open the circuit for repair. Make sure the vacuum pump used is not close to any ignition sources and proper ventilation is provided.

After leak testing or leak is repaired, replace liquid line filter drier, evacuate system, and recharge with correct refrigerant quantity.

The cylinder used for recovery should be labeled (special cylinders) and must have pressure-relief valve and associated shut-off valves.

Empty recovery cylinders must be evacuated and if possible cooled before recovery again. The recovery equipment must be suitable for flammable refrigerants. The equipment operating instructions must be at hand. The manufacturer should be consulted if you have any doubts about equipment operation. A set of calibrated weighing scales and hoses with leak free disconnect coupling are also needed.

The recovery equipment and all other components must be in good working condition. Make sure the refrigerant recovered is processed per local laws and waste transfer note arranged.

Ensure different refrigerants are not mixed together in recovery units and especially in cylinders

Coil Removal

Coils are easy to remove if required for compressor removal, or to replace coil.

Before the compressor or compressor oil is removed, make sure that the flammable refrigerant is evacuated to a level where there is no refrigerant left in the lubricant. The compressor body should not be heated with an open flame or other ignition sources to speed up this evacuation process. The oil drain from the system must be carried out safely

1. Shut off all power to unit.
2. Recover refrigerant from system through service valves.
3. Break vacuum with nitrogen.
4. Remove top cover. (See Remove Top Cover in Cabinet section of the manual.)
5. Remove screws in base pan to coil grille.
6. Remove coil grille from unit.
7. Remove screws on corner post holding coil tube sheet.

⚠ WARNING

FIRE HAZARD

Failure to follow this warning could result in personal injury or equipment damage.

Cut tubing to reduce possibility of personal injury and fire.

8. Use a small tubing cutter to cut the liquid and vapor lines at both side of the coil. Cut in convenient location for easy reassembly with copper slip couplings.
9. Lift coil vertically from base pan and carefully place aside.
10. Reverse procedure to reinstall coil.
11. Replace filter drier, evacuate system, recharge, and check for normal systems operation.

Aluminum Coil Removal

For all aluminum coils, the coil has two or four (depending on size of unit) fin isolators on the top of the coil as shown in Fig. 62. These must be reinstalled onto replacement coil.

⚠ CAUTION

UNIT DAMAGE HAZARD

Failure to follow this caution may result in premature corrosion failure of aluminum coil

During coil replacement, when brazing the new coil into the unit, a guard is needed so copper-to-copper joint braze splatter does not reach any aluminum parts. This can cause pitting and premature failure due to corrosion.

Fabricate a metal braze shield of approximately 8” X 8” to protect aluminum components when brazing (see Fig. 63).

The orientation of the fin isolator is shown in Fig. 64. There is a threaded mechanical fitting on the liquid distributor. This connection is not field serviceable and should not be disturbed.

The copper stub tube connection to the liquid service valve needs to be un-brazed for coil removal. (See Fig. 65.)

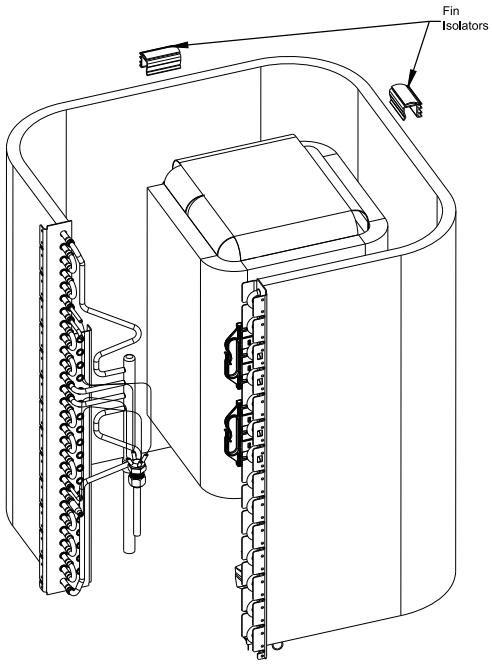

A13187A

Fig. 62 – Fin Isolator Location

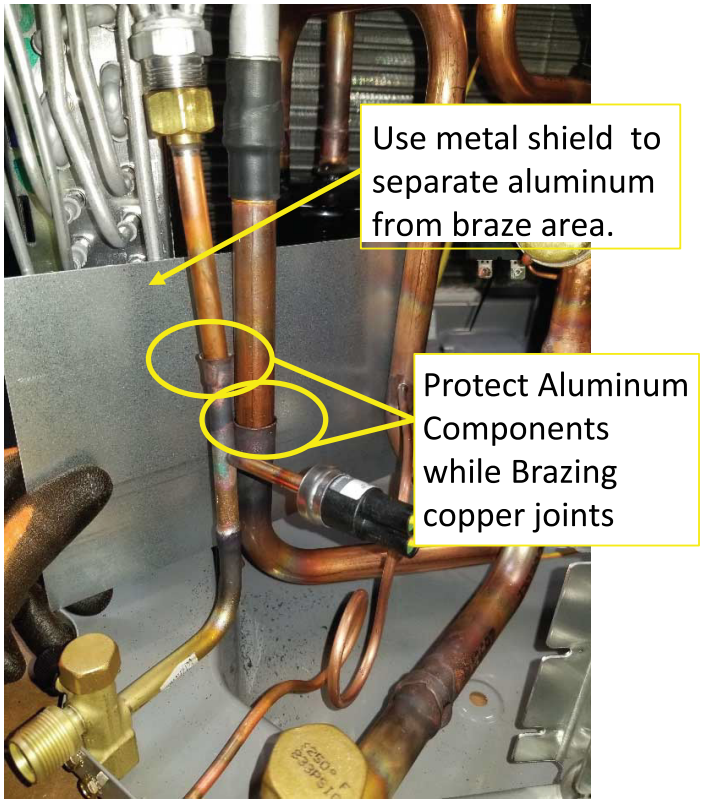

A190396

Fig. 63 – Use Braze Shield to Protect Aluminum

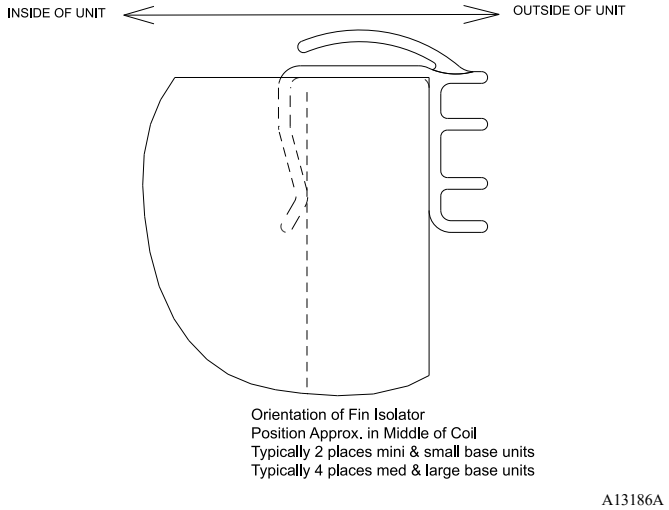

Fig. 64 – Fin Isolator Orientation

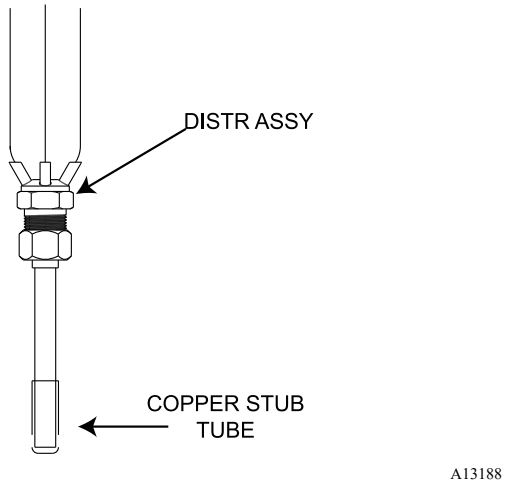

Fig. 65 – Copper Stub Tube Connection

Compressor Removal and Replacement

Once it is determined that compressor has failed and the reason established, compressor must be replaced.

⚠ CAUTION

PERSONAL INJURY HAZARD

Failure to follow this caution may result in personal injury.

Turn off all power to unit before proceeding. Wear safety glasses, protective clothing, and gloves when handling refrigerant. Acids formed as a result of motor burnout can cause burns.

⚠ CAUTION

PERSONAL INJURY HAZARD

Failure to follow this caution may result in personal injury.

Wear safety glasses, protective clothing, and gloves when handling refrigerant and when using brazing torch.

1. Shut off all power to unit.
2. Remove and recover all refrigerant from system until pressure gauges read 0 psi. Use all service ports. Never open a system under a vacuum to atmosphere. Break vacuum with dry nitrogen holding charge first. Do not exceed 5 psig.
3. Disconnect electrical leads from compressor. Disconnect or remove crankcase heater and remove compressor hold-down bolts.
4. Cut compressor from system with tubing cutter. Do not use brazing torch for compressor removal. Oil vapor may ignite when compressor is disconnected.
5. Scratch matching marks on stubs in old compressor. Make corresponding marks on replacement compressor.
6. Use torch to remove stubs from old compressor and to reinstall them in replacement compressor.
7. Use copper couplings to tie compressor back into system.
8. Replace filter drier, evacuate system, recharge, and check for normal system operation.

⚠ CAUTION

UNIT DAMAGE HAZARD

Failure to follow this caution may result in equipment damage or improper operation.

Do not leave system open to atmosphere. Compressor oil is highly susceptible to moisture absorption.

System Clean-Up After Burnout

Some compressor electrical failures can cause motor to burn. When this occurs, by-products of burn, which include sludge, carbon, and acids, contaminate system. Test the oil for acidity using POE oil acid test to determine burnout severity. If burnout is severe enough, system must be cleaned before replacement compressor is installed. The 2 types of motor burnout are classified as mild or severe.

In mild burnout, there is little or no detectable odor. Compressor oil is clear or slightly discolored. An acid test of compressor oil will be negative. This type of failure is treated the same as mechanical failure. Liquid-line strainer should be removed and liquid-line filter drier replaced.

In a severe burnout, there is a strong, pungent, rotten egg odor. Compressor oil is very dark. Evidence of burning may be present in tubing connected to compressor. An acid test of compressor oil will be positive. Follow these additional steps:

1. TXV must be cleaned or replaced.
2. Drain any trapped oil from accumulator if used.
3. Remove and discard liquid-line strainer and filter drier.
4. After system is reassembled, install liquid and suction-line, replace with Puron Advance™ (R-454B) filter driers.

NOTE: On heat pumps, install suction line drier between compressor and accumulator.

5. Operate system for 10 hr. Monitor pressure drop across drier. If pressure drop exceeds 3 psig replace suction-line and liquid-line filter driers. Be sure to purge system with dry nitrogen when replacing filter driers. If suction line driers must be replaced, retest pressure drop after additional 10 hours (run time). Continue to monitor pressure drop across suction line filter drier. After 10 hr of run time, remove suction-line filter drier and replace liquid-line filter drier. Never leave suction-line filter drier in system longer than 72 hr (run time).
6. Charge system. (See unit information plate.)

⚠ CAUTION

UNIT DAMAGE HAZARD

Failure to follow this caution may result in equipment damage or improper operation.

Only suction line filter driers should be used for refrigerant and oil clean up. Use of non-approved products could limit system life and void unit warranty.

Evacuation

Proper evacuation of the system will remove non-condensibles and ensure a tight, dry system before charging. The two methods used to evacuate a system are the deep vacuum method and the triple evacuation method.

Deep Vacuum Method

The deep vacuum method requires a vacuum pump capable of pulling a vacuum of 500 microns and a vacuum gauge capable of accurately measuring this vacuum depth. The deep vacuum method is the most positive way of assuring a system is free of air and moisture. (See Fig. 66.)

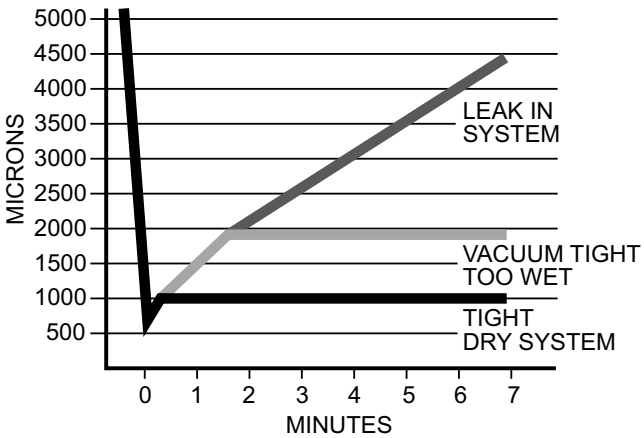

A95424

Fig. 66 – Deep Vacuum Graph

Triple Evacuation Method

The triple evacuation method should be used when vacuum pump is only capable of pumping down to 28 in. of mercury vacuum and system does not contain any liquid water. Refer to Fig. 67 and proceed as follows:

1. Pump system down to 28 in. of mercury and allow pump to continue operating for an additional 15 minutes.
2. Close service valves and shut off vacuum pump.
3. Connect a nitrogen cylinder and regulator to system and open until system pressure is 2 psig.
4. Close service valve and allow system to stand for 1 hr. During this time, dry nitrogen will be able to diffuse throughout the system absorbing moisture.
5. Repeat this procedure as indicated in Fig. 67. System will then be free of any contaminants and water vapor.

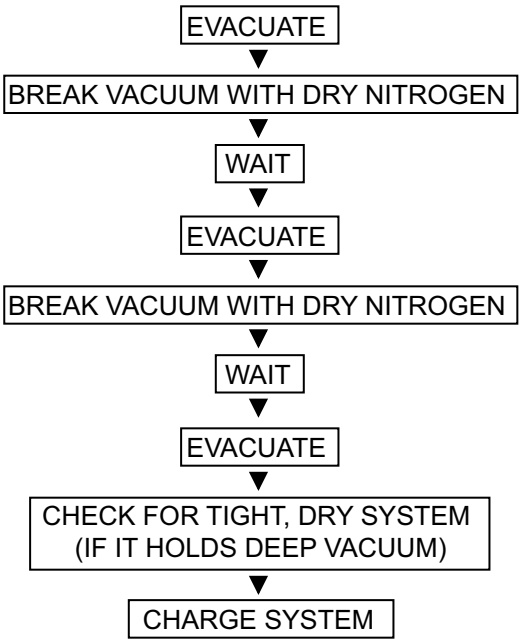

A95425

Fig. 67 – Triple Evacuation Method

Calculating Superheat and Subcooling with Puron Advance™ (R-454B) Refrigerant

Puron Advance™ (R-454B) is Bryant's new refrigerant that will replace Puron® (R-410A) in all residential ducted, ductless, and light commercial products. This refrigerant, meets the Environmental Protection Agency's (EPA) anticipated Global Warming Potential (GWP) limits for refrigerants and the scheduled phase down of higher GWP refrigerants like Puron® (R-410A). Effective January 1, 2025, all newly manufactured or imported HVAC indoor and outdoor units must be designed for use with a low GWP refrigerant. Puron Advance™ (R-454B) not only meets, but exceeds the new requirement with a GWP of 466 and is a 75% reduction in GWP compared to R-410A.

Puron Advance™ (R-454B) is a refrigerant blend with minimal glide. Refrigerant glide is the difference in temperature when a refrigerant blend begins to evaporate and when it begins to condense. The initial evaporation (saturated liquid) temperature is known as the bubble point and the initial condensation temperature (saturated vapor) is known as the dew point.

As with Puron®, Puron Advance™ should always be charged as a liquid. When charging, the dew point (saturated vapor temperature) should be used to calculate superheat and bubble point (saturated liquid temperature) should be used to calculate subcooling.

Table 12 – Puron Advance™ (R-454B) Temperature and Pressure Chart

Pressure	Sat Liq T (SC)	Sat Vap T (SH)	Pressure	Sat Liq T (SC)	Sat Vap T (SH)	Pressure	Sat Liq T (SC)	Sat Vap T (SH)	Pressure	Sat Liq T (SC)	Sat Vap T (SH)	Pressure	Sat Liq T (SC)	Sat Vap T (SH)	Pressure	Sat Liq T (SC)	Sat Vap T (SH)
PSIG	°F	°F	PSIG	°F	°F	PSIG	°F	°F	PSIG	°F	°F	PSIG	°F	°F	PSIG	°F	°F
10	-39.2	-37.3	**110**	39.1	41.5	**210**	76.0	78.4	**310**	102.0	104.4	**410**	122.5	124.8	**510**	139.6	141.7
12	-36.1	-34.1	**112**	40.0	42.4	**212**	76.6	79.0	**312**	102.4	104.9	**412**	122.9	125.2	**512**	140.0	142.0
14	-33.1	-31.1	**114**	40.9	43.4	**214**	77.2	79.6	**314**	102.9	105.3	**414**	123.2	125.6	**514**	140.3	142.4
16	-30.3	-28.2	**116**	41.8	44.3	**216**	77.8	80.2	**316**	103.3	105.8	**416**	123.6	125.9	**516**	140.6	142.7
18	-27.7	-25.5	**118**	42.7	45.2	**218**	78.4	80.8	**318**	103.8	106.2	**418**	124.0	126.3	**518**	140.9	143.0
20	-25.1	-22.9	**120**	43.6	46.0	**220**	79.0	81.4	**320**	104.2	106.7	**420**	124.3	126.7	**520**	141.2	143.3
22	-22.7	-20.4	**122**	44.5	46.9	**222**	79.5	82.0	**322**	104.7	107.1	**422**	124.7	127.0	**522**	141.5	143.6
24	-20.4	-18.1	**124**	45.4	47.8	**224**	80.1	82.5	**324**	105.1	107.5	**424**	125.1	127.4	**524**	141.8	143.9
26	-18.1	-15.8	**126**	46.2	48.6	**226**	80.7	83.1	**326**	105.5	108.0	**426**	125.4	127.7	**526**	142.2	144.2
28	-16.0	-13.6	**128**	47.1	49.5	**228**	81.2	83.7	**328**	106.0	108.4	**428**	125.8	128.1	**528**	142.5	144.5
30	-13.9	-11.5	**130**	47.9	50.3	**230**	81.8	84.2	**330**	106.4	108.9	**430**	126.1	128.4	**530**	142.8	144.8
32	-11.9	-9.5	**132**	48.7	51.2	**232**	82.4	84.8	**332**	106.8	109.3	**432**	126.5	128.8	**532**	143.1	145.1
34	-9.9	-7.5	**134**	49.6	52.0	**234**	82.9	85.4	**334**	107.3	109.7	**434**	126.9	129.2	**534**	143.4	145.4
36	-8.1	-5.6	**136**	50.4	52.8	**236**	83.5	85.9	**336**	107.7	110.1	**436**	127.2	129.5	**536**	143.7	145.7
38	-6.2	-3.8	**138**	51.2	53.6	**238**	84.0	86.5	**338**	108.1	110.6	**438**	127.6	129.9	**538**	144.0	146.0
40	-4.5	-2.0	**140**	52.0	54.4	**240**	84.6	87.0	**340**	108.6	111.0	**440**	127.9	130.2	**540**	144.3	146.3
42	-2.7	-0.3	**142**	52.8	55.2	**242**	85.1	87.6	**342**	109.0	111.4	**442**	128.3	130.6	**542**	144.6	146.6
44	-1.1	1.4	**144**	53.6	56.0	**244**	85.7	88.1	**344**	109.4	111.8	**444**	128.6	130.9	**544**	144.9	146.9
46	0.6	3.0	**146**	54.3	56.7	**246**	86.2	88.6	**346**	109.8	112.3	**446**	129.0	131.2	**546**	145.2	147.2
48	2.2	4.6	**148**	55.1	57.5	**248**	86.7	89.2	**348**	110.3	112.7	**448**	129.3	131.6	**548**	145.5	147.5
50	3.7	6.2	**150**	55.9	58.3	**250**	87.3	89.7	**350**	110.7	113.1	**450**	129.7	131.9	**550**	145.8	147.8
52	5.3	7.7	**152**	56.6	59.0	**252**	87.8	90.2	**352**	111.1	113.5	**452**	130.0	132.3	**552**	146.1	148.1
54	6.7	9.2	**154**	57.4	59.8	**254**	88.3	90.8	**354**	111.5	113.9	**454**	130.4	132.6	**554**	146.4	148.3
56	8.2	10.7	**156**	58.1	60.5	**256**	88.8	91.3	**356**	111.9	114.3	**456**	130.7	133.0	**556**	146.7	148.6
58	9.6	12.1	**158**	58.9	61.2	**258**	89.4	91.8	**358**	112.3	114.7	**458**	131.1	133.3	**558**	147.0	148.9
60	11.0	13.5	**160**	59.6	61.9	**260**	89.9	92.3	**360**	112.7	115.2	**460**	131.4	133.6	**560**	147.3	149.2
62	12.4	14.8	**162**	60.3	62.7	**262**	90.4	92.8	**362**	113.1	115.6	**462**	131.7	134.0	**562**	147.6	149.5
64	13.7	16.2	**164**	61.0	63.4	**264**	90.9	93.4	**364**	113.6	116.0	**464**	132.1	134.3	**564**	147.9	149.8
66	15.0	17.5	**166**	61.7	64.1	**266**	91.4	93.9	**366**	114.0	116.4	**466**	132.4	134.6	**566**	148.2	150.1
68	16.3	18.8	**168**	62.4	64.8	**268**	91.9	94.4	**368**	114.4	116.8	**468**	132.8	135.0	**568**	148.5	150.4
70	17.6	20.0	**170**	63.1	65.5	**270**	92.4	94.9	**370**	114.8	117.2	**470**	133.1	135.3	**570**	148.8	150.6
72	18.8	21.3	**172**	63.8	66.2	**272**	92.9	95.4	**372**	115.2	117.6	**472**	133.4	135.6	**572**	149.1	150.9
74	20.0	22.5	**174**	64.5	66.9	**274**	93.4	95.9	**374**	115.6	118.0	**474**	133.8	136.0	**574**	149.4	151.2
76	21.2	23.7	**176**	65.2	67.5	**276**	93.9	96.4	**376**	116.0	118.4	**476**	134.1	136.3	**576**	149.7	151.5
78	22.4	24.9	**178**	65.9	68.2	**278**	94.4	96.9	**378**	116.4	118.7	**478**	134.4	136.6	**578**	149.9	151.8
80	23.6	26.0	**180**	66.6	68.9	**280**	94.9	97.3	**380**	116.7	119.1	**480**	134.8	137.0	**580**	150.2	152.0
82	24.7	27.2	**182**	67.2	69.6	**282**	95.4	97.8	**382**	117.1	119.5	**482**	135.1	137.3	**582**	150.5	152.3
84	25.8	28.3	**184**	67.9	70.2	**284**	95.9	98.3	**384**	117.5	119.9	**484**	135.4	137.6	**584**	150.8	152.6
86	26.9	29.4	**186**	68.5	70.9	**286**	96.3	98.8	**386**	117.9	120.3	**486**	135.8	137.9	**586**	151.1	152.9
88	28.0	30.5	**188**	69.2	71.5	**288**	96.8	99.3	**388**	118.3	120.7	**488**	136.1	138.3	**588**	151.4	153.2
90	29.1	31.6	**190**	69.8	72.2	**290**	97.3	99.8	**390**	118.7	121.1	**490**	136.4	138.6	**590**	151.7	153.4
92	30.2	32.6	**192**	70.5	72.8	**292**	97.8	100.2	**392**	119.1	121.5	**492**	136.7	138.9	**592**	151.9	153.7
94	31.2	33.7	**194**	71.1	73.5	**294**	98.3	100.7	**394**	119.5	121.8	**494**	137.1	139.2	**594**	152.2	154.0
96	32.2	34.7	**196**	71.7	74.1	**296**	98.7	101.2	**396**	119.8	122.2	**496**	137.4	139.5	**596**	152.5	154.3
98	33.3	35.7	**198**	72.4	74.7	**298**	99.2	101.7	**398**	120.2	122.6	**498**	137.7	139.9	**598**	152.8	154.5
100	34.3	36.7	**200**	73.0	75.4	**300**	99.7	102.1	**400**	120.6	123.0	**500**	138.0	140.2	**600**	153.1	154.8
102	35.2	37.7	**202**	73.6	76.0	**302**	100.1	102.6	**402**	121.0	123.3	**502**	138.4	140.5	**602**	153.4	155.1
104	36.2	38.7	**204**	74.2	76.6	**304**	100.6	103.0	**404**	121.4	123.7	**504**	138.7	140.8	**604**	153.6	155.3
106	37.2	39.6	**206**	74.8	77.2	**306**	101.1	103.5	**406**	121.7	124.1	**506**	139.0	141.1	**606**	153.9	155.6
108	38.1	40.6	**208**	75.4	77.8	**308**	101.5	104.0	**408**	122.1	124.5	**508**	139.3	141.4	**608**	154.2	155.9

Training

My Learning Center is your central location for professional residential HVAC training resources that help strengthen careers and businesses. We believe in providing high quality learning experiences both online and in the classroom.

Access My Learning Center with your HVACpartners credentials at www.mlctraining.com. Please contact us a mylearning@carrier.com with questions.

©2026 Carrier. All rights reserved.
Edition Date: 07/26

Catalog No: SMACHPVSR454-02

A Proud Member of the Carrier Family

Replaces: SMACHPVSR454-01

Manufacturer reserves the right to change, at any time, specifications and designs without notice and without obligations.