37MTRAQ

Outdoor Unit Multi-Zone Ductless System
Sizes 18K to 48K

Product Data

Fig. 1 — Sizes 18K - 36K

Fig. 2 — Size 48K

NOTE: Images are for illustration purposes only. Actual models may differ slightly.

INDUSTRY LEADING FEATURES / BENEFITS

A competitively priced and creative solution to design problems.

The **37MTRAQ** ductless inverter driven multi-zone system provides individual comfort control for up to 6 separate zones. Match two, three, four, five, or even six space-saving High Wall fan coils with one outdoor heat pump. The indoor fan coils are connected to the outdoor unit by refrigerant tubing and wires.

Mount different indoor unit styles in several locations to accommodate the application. This selection of fan coils permits inexpensive and creative solutions to design problems such as:

- Adding air conditioning to spaces that are heated by hydronic or electric heat and have no ductwork
- Historical renovations or any application where preserving the look of the original structure is essential
- Commercial add-on jobs where the existing air conditioning system cannot be stretched.

These compact indoor fan coil units take up very little space in the room and do not obstruct windows. The fan coils are attractively styled to blend with most room decors. Advanced system components incorporate innovative technology to provide reliable cooling and heating performance at low sound levels.

TABLE OF CONTENTS

PAGE

INDUSTRY LEADING FEATURES / BENEFITS 1
MODEL NUMBER NOMENCLATURE 3
STANDARD FEATURES AND ACCESSORIES 4
DIMENSIONS 5
CLEARANCES 8
SPECIFICATIONS 9
PERFORMANCE. 12
COOLING PERFORMANCE 13
HEATING PERFORMANCE 30
APPLICATION DATA 39
INDOOR UNIT COMBINATIONS. 39
UNIT MOUNTING (OUTDOOR). 41
WIRING 41
PIPING REQUIREMENTS 42
REFRIGERANT CYCLE DIAGRAMS 46
WIRING DIAGRAMS 48
GUIDE SPECIFICATIONS 52

Inverter Technology

The inverter driven compressor is designed to run at various input power frequencies (Hz) which controls the compressor's motor speed.

Even Temperature – The control package, including the inverter, monitors the outdoor and indoor temperatures as they relate to the selected indoor set point and adjusts the compressor speed to match the load and keep the system operating continuously rather than cycling and creating temperature swings. This translates to higher comfort levels for the occupants.

Rapid Pull Down/Warm-Up – Comfort is increased by the inverter system's ability to ramp up the compressor speed enabling the system to reach the user selected room temperature set point quicker.

Humidity Control – Running the system for longer periods and continuously changing the compressor speed enhances the humidity control.

Individual Room Comfort

Maximum comfort is provided because each space can be controlled individually based on the usage pattern.

Low Sound Levels

When noise is a concern, ductless systems are the answer. The indoor units are whisper quiet. There are no compressors indoors, either in the conditioned space or directly over it, and there is none of the noise usually generated by air being forced through the ductwork.

When sound ordinances and proximity to neighbors demand quiet operation, the **37MTRAQ** unit is the right choice. With the inverter technology, these units run at lower speeds, most of the time resulting in reduced sound levels.

Inverter Technology – Enhanced Economical Operation

Ductless systems are inherently economical to operate. Individual rooms are heated or cooled only when required, and since the air is delivered directly to the space, there is no need to use additional energy to move the air in the ductwork. This economical operation is enhanced further when the inverter system output matches the load resulting in a more efficient system.

Easy-To-Use Controls

The multi-zone systems have microprocessor-based controls to provide the ultimate in comfort and efficiency. The user friendly wired and wireless remote controls provide an interface between the user and the unit.

Secure Operation

If security is an issue, outdoor and indoor units are connected only by refrigerant piping and wiring to prevent intruders from crawling through ductwork or wall openings. Since the **37MTRAQ** can be installed close to an outside wall, coils are protected from vandals and severe weather.

Fast Installation

This compact ductless system is simple to install. A mounting bracket is included with the indoor units and only wires and piping need to run between the indoor and outdoor units. These units are fast and easy to install ensuring minimal disruption to customers in homes or the workplace. This makes **37MTRAQ** systems the equipment of choice for retrofit applications.

Simple Servicing and Maintenance

Removing the top panel of the outdoor unit provides immediate access to the control compartment, providing the service technician access to the diagnostic LEDs to facilitate the troubleshooting process. In addition, the draw-thru design of the outdoor unit means that dirt accumulates on the outside surface of the coil. Coils can be cleaned quickly from the inside using a pressure hose and detergent.

On the indoor units, service and maintenance expense is reduced due to the permanent easy to clean filters. Also, error codes appear on the front panel to alert the user to certain system malfunctions.

Built-in Reliability

Ductless system indoor and outdoor units are designed to provide years of trouble-free operation. Both the indoor and outdoor units are well protected. Whenever the microprocessor detects abnormal conditions, the unit stops and an error code appears.

Inverter systems provide additional reliability due to the soft start. This refers to the ability of the inverter to start the compressor motor using reduced voltage and reduced current. This feature is beneficial from an electrical standpoint (eliminates current spikes) as well as an overall reliability standpoint due to reduced stress on all associated system components.

Agency Listings

All systems are listed with AHRI (Air conditioning, Heating, and Refrigeration Institute) and are UL/ETL certified per UL 60335-2-40 standard.

Manufacturer reserves the right to change, at any time, specifications and designs without notice and without obligations.

MODEL NUMBER NOMENCLATURE

OUTDOOR UNIT

37 MT R A Q 18 C A 3

37 = OUTDOOR UNIT

MT = ALL

UNIT TYPE
R = STANDARD/REGULAR HEAT

A = REVISION LEVEL

SYSTEM TYPE
Q = OUTDOOR UNIT

NOMINAL CAPACITY
18 - 1 1/2 TONS
27 - 2 TONS
36 - 3 TONS
48 - 4 TONS

VOLTAGE
3 = 208/230-1-60

VARIATION
A = STANDARD

MAXIMUM NUMBER OF FAN COIL UNITS THAT CAN BE CONNECTED TO THE OUTDOOR UNIT
C = 1:3
D = 1:4
E = 1:5
F = 1:6

Use of the AHRI Certified TM Mark indicates a manufacturer's participation in the program For verification of certification for individual products, go to www.ahridirectory.org.

STANDARD FEATURES AND ACCESSORIES

Ease Of Installation	
Low Voltage Controls	S
Comfort Features	
Microprocessor Control	S
Auto Restart Function	S
Auto Changeover	S
Low Ambient Cooling	S
Low Ambient Heating	S
Energy Saving Features	
Inverter Driven Compressor	S
46° F Heating Mode (Heating Setback)	S
Safety And Reliability	
3 Minute Time Delay For Compressor	S
High Compressor Discharge Temperature	S
Low Voltage Protection	S
Compressor Overload Protection	S
Compressor Over Current Protection	S
IPM Module Protection	S
Aluminum Golden Hydrophilic pre-coated fins	S
Ease Of Service And Maintenance	
Diagnostics	S
Error Messages Displayed	S
Application Flexibility	
Crankcase Heater	S
Base pan Heater	S

Legend

S - Standard
A - Accessory

ACCESSORIES

NOTE: The basepan is built in with multiple holes for proper draining during defrost. For applications where it is required to seal these holes, and re-direct the condensate drain, rubber plugs are available through RCD.

OUTDOOR UNITS

Crankcase Heater

The crankcase heater is standard on all unit sizes. Heater clamps must be placed around the compressor oil stump.

Base pan Heater

The base pan heater is standard on all unit sizes.

Manufacturer reserves the right to change, at any time, specifications and designs without notice and without obligations.

DIMENSIONS

Table 1 — Dimensions and Weights

System Size		18K	27K	36K	48K
		(208/230 V)	(208/230 V)	(208/230 V)	(208/230 V)
Height (H)	inch	26.5	31.89	31.89	52.48
	mm	673	810	810	1333
Width (W)	inch	35.04	37.24	37.24	37.48
	mm	890	946	946	952
Depth (D)	inch	13.46	16.14	16.14	16.34
	mm	342	410	410	415
Weight -Net	lbs.	100.53	138.89	168.87	222
	kg	45.6	63	76.6	100.7

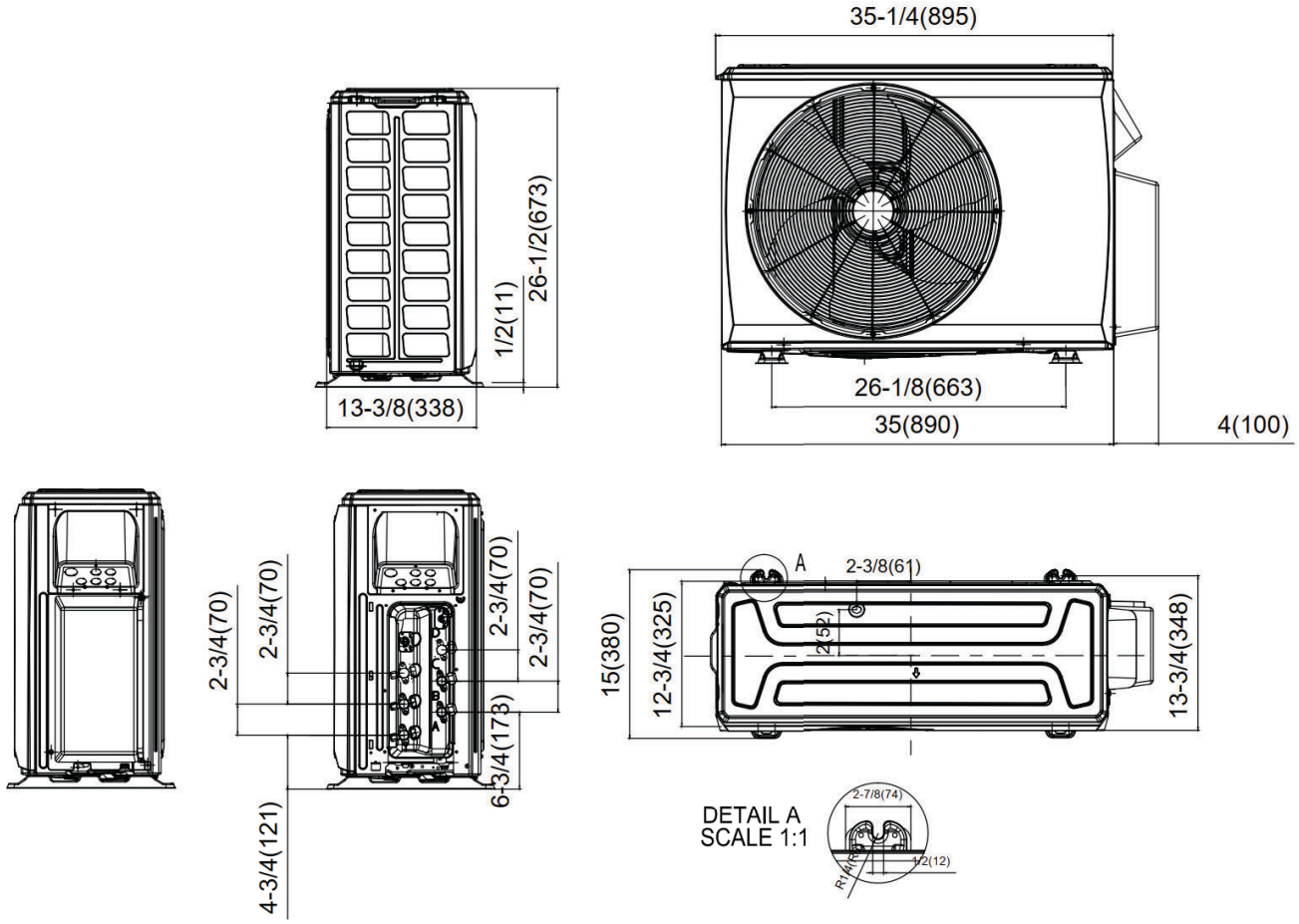

Fig. 3 —Dimensions - Size 18K

DIMENSIONS (CONT)

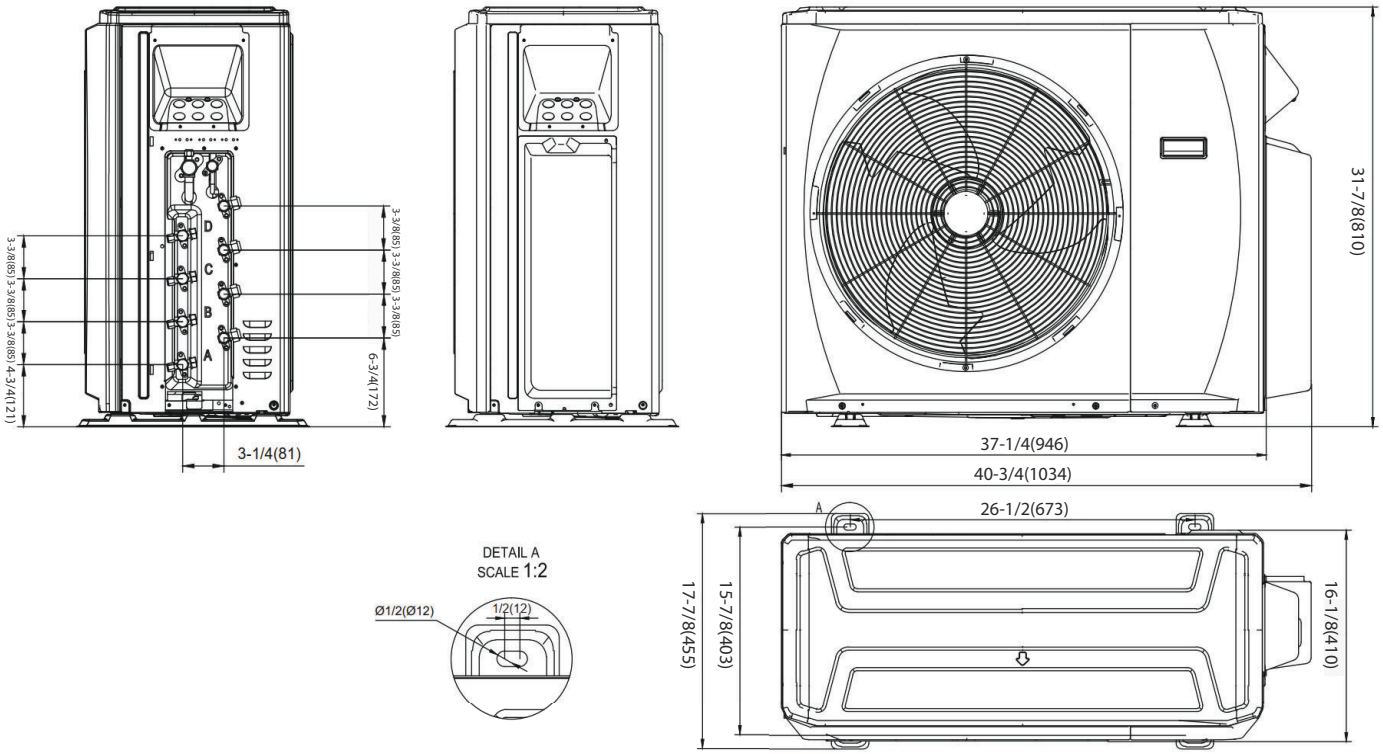

Fig. 4 — Outdoor Dimensions Size 27K

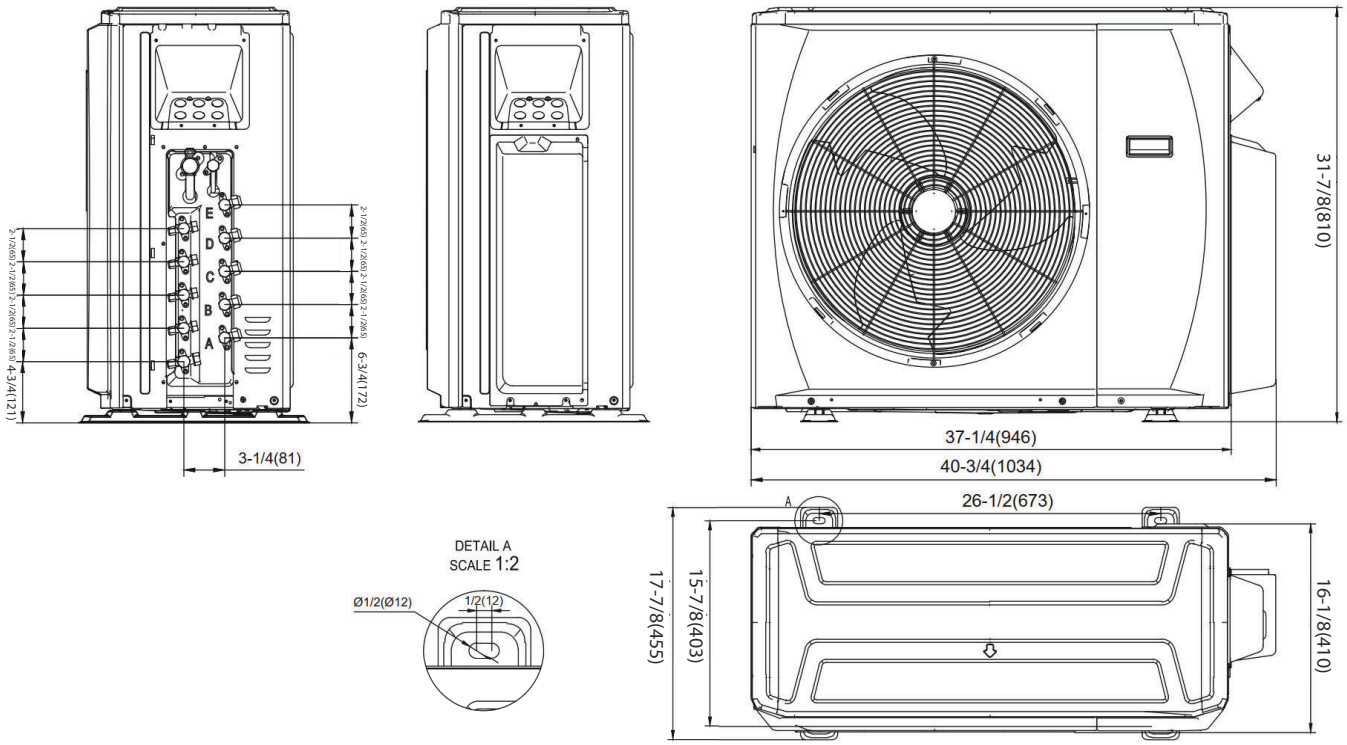

Fig. 5 — Outdoor Dimensions Size 36K

DIMENSIONS (CONT)

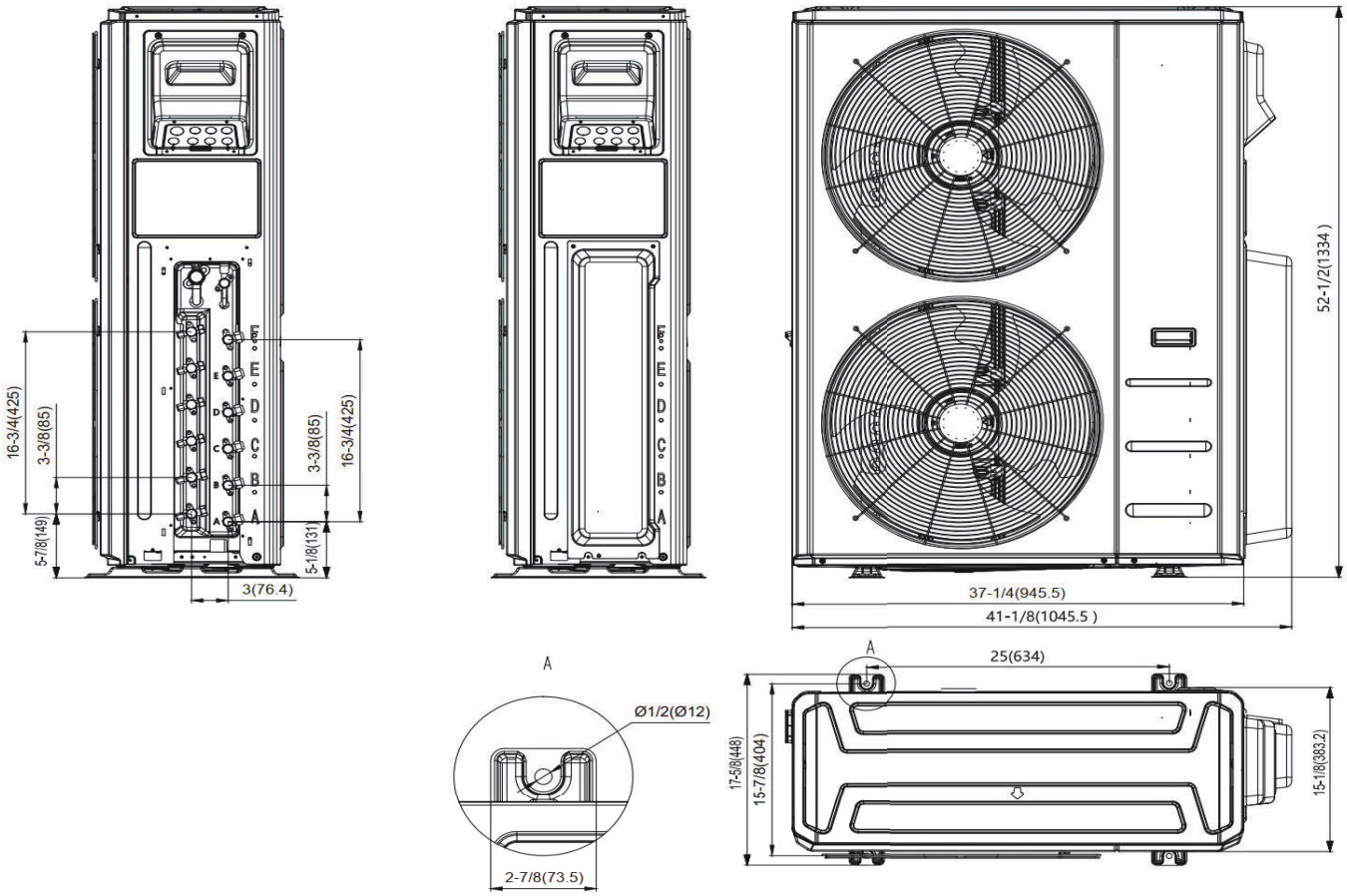

Fig. 6 — Outdoor Dimensions Size 48K

CLEARANCES

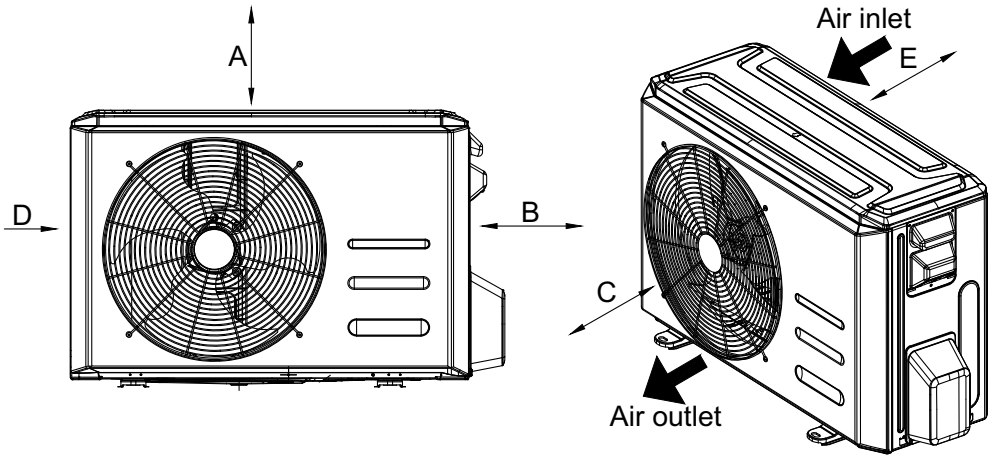

Fig. 7 — Clearances

UNIT	MINIMUM VALUE in. (mm)
A	20 (500)
B	14 (350)
C	20 (500)
D	4 (100)
E	4 (100)

NOTE: The outdoor unit must be mounted at least 2in (50mm) above the maximum anticipated snow depth.

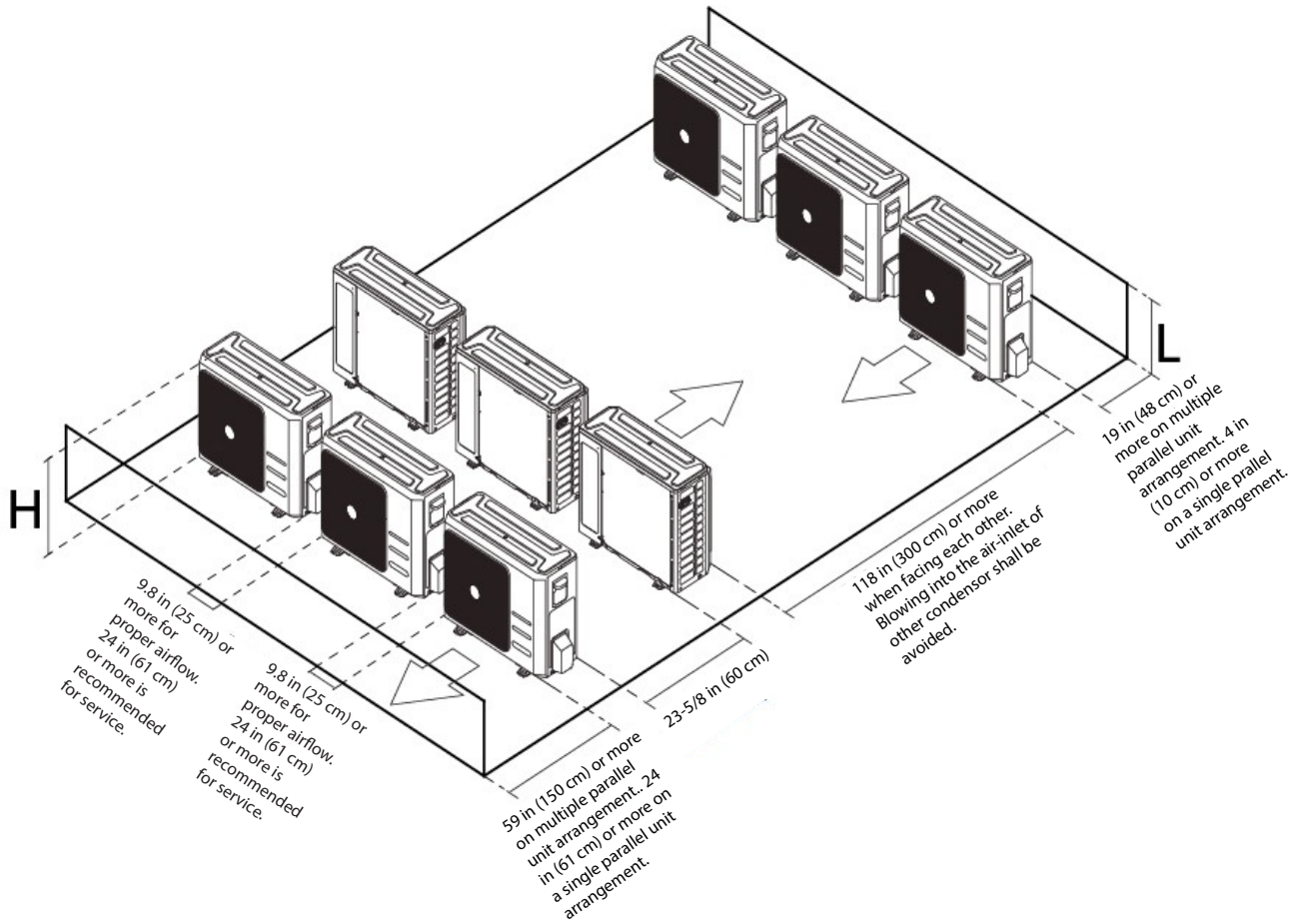

Fig. 8 — Clearances for multiple units

SPECIFICATIONS

Table 2: Specifications

OUTDOOR MODEL			37MTRAQ18CA3	37MTRAQ27DA3	37MTRAQ36EA3	37MTRAQ48FA3
POWER SUPPLY		V;Ph;Hz	208/230V;1Ph;60HZ	208/230V;1Ph;60HZ	208/230V;1Ph;60HZ	208/230V;1Ph;60HZ
COMPRESSOR SPECIFICATIONS	Model		KTN150D30UFZA	KTM240D46UKT2	KTF310D43UMT	KTQ420D1UMU
	Type		Twin-ROTARY	ROTARY	ROTARY	ROTARY
	Brand		GMCC	GMCC	GMCC	GMCC
	Capacity	W	4730	7600	10010	13700
		Btu/h	16139	25931	34154	46744
	Input	W	1250	2045	2765	3700
	Rated current	A	3.1	4.15	5.38	7.02
	Refrigerant Oil		ESTER OIL	ESTER OIL	ESTER OIL	ESTER OIL
	Oil Type		VG74	VG74	VG74	VG74
	Oil Charge	fl. Oz	15.22	20.97	33.82	47.35
OUTDOOR FAN 1# SPECIFICATIONS	Material	-	Acrylonitrile Styrene +20%GF	Acrylonitrile Styrene +20%GF	Acrylonitrile Styrene +20%GF	Acrylonitrile Styrene +20%GF
	Type	-	ZL-535*133*12-3KFN	ZL-560*139*12-3KN	ZL-560*139*12-3KN	ZL-554*148*12-3KFN
	Diameter	inch	21.1	22.0	22.0	21.8
		mm	535	560	560	554
	Height	inch	5.2	5.5	5.5	5.8
		mm	133	139	139	148
OUTDOOR FAN 2# SPECIFICATIONS	Material	-	N/A	N/A	N/A	Acrylonitrile Styrene +20%GF
	Type	-	N/A	N/A	N/A	ZL-554*148*12-3KFN
	Diameter	inch	N/A	N/A	N/A	21.8
		mm	N/A	N/A	N/A	554
	Height	inch	N/A	N/A	N/A	5.8
		mm	N/A	N/A	N/A	148
OUTDOOR MOTOR 1# SPECIFICATIONS	Model	-	ZKFN-80-10-1L	ZKFN-120-8-9	ZKFN-120-8-9	ZKFN-85-10-1L
	Type	-	DC	DC	DC	DC
	Input	W	78.6	80.0	107.0	92
	Max. input	W	239.0	176	176	167
	Output	W	59	60	80.3	69
	FLA	A	1.0	1.2	1.3	2.5
	Rated HP	HP	0.08	0.08	0.11	0.09
	Range of current	Amps	0.33~1.85	0.79~1.67	0.79~1.67	0.77~1.44
	Rated current	Amps	0.71	1.03	1.21	1.00
	Speed	rev/min	750/600/500	800/700/650	900/750/600	800/700/650
	Rated RPM	rev/min	750	800	900	800
	Insulation class	-	B	B	B	B
	Safe class	-	IP24	IPX4	IPX4	IP44

Manufacturer reserves the right to change, at any time, specifications and designs without notice and without obligations.

Table 2: Specifications (Continued)

OUTDOOR MODEL			37MTRAQ18CA3	37MTRAQ27DA3	37MTRAQ36EA3	37MTRAQ48FA3
OUTDOOR MOTOR 2# SPECIFICATIONS	Model	-	N/A	N/A	N/A	ZKFN-85-10-1L
	Type	-	N/A	N/A	N/A	DC
	Input	W	N/A	N/A	N/A	92
	Max. input	W	N/A	N/A	N/A	167
	Output	W	N/A	N/A	N/A	69
	FLA	A	N/A	N/A	N/A	2.5
	Rated HP	HP	N/A	N/A	N/A	0.09
	Range of current	Amps	N/A	N/A	N/A	0.77~1.44
	Rated current	Amps	N/A	N/A	N/A	1.00
	Speed	rev/min	N/A	N/A	N/A	800/700/650
	Rated RPM	rev/min	N/A	N/A	N/A	800
	Insulation class	-	N/A	N/A	N/A	B
	Safe class	-	N/A	N/A	N/A	IP44
OUTDOOR REFRIGERANT COIL 1# SPECIFICATIONS	Number of rows	Rows	2	2	2.5	2
	Tube outside dia.	inch	0.276	0.276	0.276	0.276
		mm	Φ7	Φ7	Φ7	Φ7
	Nominal Tube Wall	mm	0.00945 (0.24)	0.00945 (0.24)	0.00945 (0.24)	0.00945 (0.24)
	Tube Enhancement	(Yes/No)	Yes	Yes	Yes	Yes
	Tube Material		Copper	Copper	Copper	Copper
	Tube pitch (a)x row pitch (b)	inch	0.83× 0.87	0.83× 0.53	0.83× 0.87	0.83× 0.87
		mm	21x22	21x13.37	21x22	21x22
	Fin Spacing	FPI	20	19	20	22
		mm	1.3	1.4	1.3	1.2
	Fin type		Plain fin	Louvered	Plain fin	Plain fin
	Fin Material		Gold hydrophilic aluminum	Gold hydrophilic aluminum	Gold hydrophilic aluminum	Gold hydrophilic aluminum
	Coil length x height x width	inch	35.43x23.98x0.87+34.06x23.98x0.87	39.57x29.76x0.53+38.78x29.76x0.53	39.17x30x2.6	38.39x24.8x1.73
		mm	900*609*22+865*609*22	1005x756x13.37+985x756x13.37	995x762x66	975x630x44
	Face area	ft2	5.90	8.18	8.16	6.61
	Number of circuits	#	6	6	12	10
	High Burst Pressure	Psi (MPa)	550(3.79)	550(3.79)	550(3.79)	550(3.79)
	Low Burst Pressure	Psi (MPa)	340(2.34)	340(2.34)	340(2.34)	340(2.34)

Table 2: Specifications (Continued)

OUTDOOR MODEL			37MTRAQ18CA3	37MTRAQ27DA3	37MTRAQ36EA3	37MTRAQ48FA3
OUTDOOR REFRIGERANT COIL 2# SPECIFICATIONS	Number of rows	Rows	N/A	N/A	N/A	2
	Tube outside dia.	inch	N/A	N/A	N/A	0.276
		mm	N/A	N/A	N/A	Φ7
	Nominal Tube Wall	mm	N/A	N/A	N/A	0.00945 (0.24)
	Tube Enhancement	(Yes/No)	N/A	N/A	N/A	Yes
	Tube Material		N/A	N/A	N/A	Copper
	Tube pitch (a)x row pitch (b)	inch	N/A	N/A	N/A	0.83× 0.87
		mm	N/A	N/A	N/A	21x22
	Fin Spacing	FPI	N/A	N/A	N/A	22
		mm	N/A	N/A	N/A	1.2
	Fin type		N/A	N/A	N/A	Plain fin
	Fin Material		N/A	N/A	N/A	Gold hydrophilic aluminum
	Coil length x height x width	inch	N/A	N/A	N/A	38.39x24.8x1.73
		mm	N/A	N/A	N/A	975x630x44
	Face area	ft2	N/A	N/A	N/A	6.61
	Number of circuits	#	N/A	N/A	N/A	10
	High Burst Pressure	Psi (MPa)	N/A	N/A	N/A	550(3.79)
	Low Burst Pressure	Psi (MPa)	N/A	N/A	N/A	340(2.34)
PIPING AND REFRIGERANT INFORMATION	Refrigerant Type	Type	R454B	R454B	R454B	R454B
	Charge Amount	lb. (kg)	3.86(1.75)	5.29(2.4)	7.54(3.42)	9.26(4.2)
	Liquid Pipe (size - connection type)	In (mm)	3x1/4in(3x6.35mm)	4x1/4in(4x6.35mm)	5x1/4in(5x6.35mm)	6x1/4in(5x6.35mm)
	Suction Pipe (size - connection type)	In (mm)	3x3/8in(3x9.52mm)	3x3/8in+1x1/2in(3x9.52mm+1x12.7mm)	3x3/8in+2x1/2in(3x9.52mm+2x12.7mm)	4x3/8in+2x1/2in(4x9.52mm+2x12.7mm)
	Min. Piping Length per each indoor unit	ft. (m)	9.8 (3)	9.8 (3)	9.8 (3)	9.8 (3)
	Standard Piping Length per each indoor unit	ft. (m)	24.6 (7.5)	24.6 (7.5)	24.6 (7.5)	24.6 (7.5)
	Max. outdoor-indoor height difference (OU higher than IU)	ft. (m)	49.21(15)	49.21(15)	49.21(15)	49.21(15)
	Max. outdoor-indoor height difference (IU higher than OU)	ft. (m)	49.21(15)	49.21(15)	49.21(15)	49.21(15)
	Max. Piping Length with no additional refrigerant charge per System (Standard Piping length x No. of Zones)	ft. (m)	73.8 (22.5)	98.4(30)	123(37.5)	147.6(45)
	Additional refrigerant charge (Greater than Standard Piping Length X # of Zones)	Oz/ft (g/m)	0.16(15)	0.16(15)	0.16(15)	0.16(15)
	Max. Length per each indoor unit	ft. (m)	98.4(30)	114.8(35)	114.8(35)	114.8(35)
	Total Maximum Piping Length per system	ft. (m)	196.9(60)	262.5(80)	262.5(80)	328(100)
	Number of IDU	ft. (m)	3	4	5	6

PERFORMANCE

INDOOR UNIT TYPE			DUCTLESS			
OUTDOOR MODEL			37MTRAQ18CA3	37MTRAQ27DA3	37MTRAQ36EA3	37MTRAQ48FA3
POWER SUPPLY		V;Ph;Hz	208/230V;1Ph;60HZ	208/230V;1Ph;60HZ	208/230V;1Ph;60HZ	208/230V;1Ph;60HZ
PERFORMANCE DATA	Cooling Rated Capacity (DOE A2 - 95°F)	Btu/h	18000	26400	36000	48000
	Cooling Capacity Range	Btu/h	5400~21200	7200~28600	9000~36200	12000~54000
	SEER2	Btu/h.W	18.5	18.5	18.8	18.7
	EER2 (DOE A2 - 95°F)	Btu/h.W	11.7	10.5	9.5	10
	Heating Rated Capacity (DOE H12 - 47°F)	Btu/h	18000	26400	36000	48000
	Heating Capacity Range	Btu/h	5700~20600	8400~30000	10000~40000	13000~54000
	COP (DOE H12 - 47°F)	W/W	3.4	3.3	2.7	3.2
	HSPF2 IV	Btu/h.W	9.2	8.5	8.5	9.5
	HSPF2 V	Btu/h.W	7.5	7.0	6.6	7.3
	Cooling Rated Capacity (DOE B2 - 82°F)	Btu/h	18800	29400	38000	52500
	EER (DOE B2 - 82°F)	Btu/h.W	15.0	12.5	11.5	12
	Heating Rated Capacity (DOE H32 - 17°F)	Btu/h	15000	16000	25600	37000
	COP (DOE H32 - 17°F)	W/W	2.4	2.4	2.2	2.3
	Heating Maximum Capacity (17°F)	Btu/h	15000	16000	26000	37000
	Heating Rated Capacity (ODE H42 - 5°F)	Btu/h	15000	18600	25200	36000
	COP (DOE H42 - 5°F)	W/W	2.0	2.0	1.9	1.85
	Heating Maximum Capacity (5°F)	Btu/h	15000	18600	25200	36000
	Cooling Capacity at 109 F (43℃)	Btu/h	14800	21000	23000	45000
	Heating Capacity at -4F (-20℃)	Btu/h	11300	10500	17700	28000
	Heating Capacity at -13F (-25℃)	Btu/h	8700	7800	14500	16000
	Heating Capacity at -22F (-30℃)	Btu/h	/	/	/	/

NOTE: See the current compatibility chart for a list of the indoor and outdoor unit match ups.

COOLING PERFORMANCE

INDEX

Table 3, “18K Cooling Performance,” on page 14

Table 4, “27K Cooling Performance,” on page 18

Table 5, “36K Cooling Performance,” on page 22

Table 6, “48K Cooling Performance,” on page 26

NOTE: Data highlighted in gray is extrapolated data and not actual test data. At 77°F outdoor conditions sweat protection activates causing a decrease in total capacity.

LEGEND

TC - Total Net Capacity (Btu/hour)
S/T: Sensible Cooling Capacity Ratio
PI: Power Input (kW)
Extrapolated Data

Table 3 – 18K Cooling Performance

AIRFLOW (CFM)	OUTDOOR DB °F(°C)	ID WB °F(°C)	60.8°F(16.0°C)					64.4°F(18.0°C)					67°F(19.4°C)					71.6°F(22.0°C)				
		ID DB °F °C	73.4°F 23.0°C	77.0°F 25.0°C	80.0°F 26.7°C	80.6°F 27.0°C	84.2°F 29.0°C	73.4°F 23.0°C	77.0°F 25.0°C	80.0°F 26.7°C	80.6°F 27.0°C	84.2°F 29.0°C	73.4°F 23.0°C	77.0°F 25.0°C	80.0°F 26.7°C	80.6°F 27.0°C	84.2°F 29.0°C	73.4°F 23.0°C	77.0°F 25.0°C	80.0°F 26.7°C	80.6°F 27.0°C	84.2°F 29.0°C
262	-22°F(-30.0°C)	TC	10856	11206	11203	11201	11200	11198	11849	11845	11843	11842	11838	10856	11206	11203	11201	11200	11198	11849	11845	11843
		S/T	0.83	0.51	0.59	0.66	0.67	0.74	0.38	0.46	0.51	0.52	0.59	0.83	0.51	0.59	0.66	0.67	0.74	0.38	0.46	0.51
		PI	0.99	0.98	0.98	0.98	0.98	0.98	0.98	0.98	0.98	0.98	0.98	0.99	0.98	0.98	0.98	0.98	0.98	0.98	0.98	0.98
	-13°F(-25.0°C)	TC	11761	12140	12137	12134	12133	12131	12836	12833	12830	12829	12825	11761	12140	12137	12134	12133	12131	12836	12833	12830
		S/T	0.83	0.51	0.59	0.66	0.67	0.75	0.38	0.46	0.51	0.52	0.60	0.83	0.51	0.59	0.66	0.67	0.75	0.38	0.46	0.51
		PI	1.03	1.02	1.02	1.02	1.02	1.02	1.02	1.02	1.02	1.02	1.02	1.03	1.02	1.02	1.02	1.02	1.02	1.02	1.02	1.02
	-4°F(-20.0°C)	TC	12666	13074	13070	13067	13067	13064	13823	13820	13816	13816	13811	12666	13074	13070	13067	13067	13064	13823	13820	13816
		S/T	0.84	0.52	0.59	0.66	0.67	0.75	0.39	0.47	0.51	0.52	0.60	0.84	0.52	0.59	0.66	0.67	0.75	0.39	0.47	0.51
		PI	1.06	1.06	1.06	1.06	1.06	1.06	1.05	1.05	1.05	1.05	1.05	1.06	1.06	1.06	1.06	1.06	1.06	1.05	1.05	1.05
	0°F(-17.8°C)	TC	13071	13489	13485	13482	13482	13477	14250	14246	14243	14243	14237	13071	13489	13485	13482	13482	13477	14250	14246	14243
		S/T	0.85	0.52	0.60	0.67	0.68	0.76	0.39	0.47	0.52	0.53	0.60	0.85	0.52	0.60	0.67	0.68	0.76	0.39	0.47	0.52
		PI	1.07	1.07	1.07	1.07	1.07	1.07	1.07	1.07	1.07	1.07	1.07	1.07	1.07	1.07	1.07	1.07	1.07	1.07	1.07	1.07
	5°F(-15.0°C)	TC	13539	14004	14003	14001	14000	14002	14891	14887	14884	14883	14883	13539	14004	14003	14001	14000	14002	14891	14887	14884
		S/T	0.86	0.52	0.60	0.67	0.68	0.77	0.39	0.47	0.52	0.53	0.61	0.86	0.52	0.60	0.67	0.68	0.77	0.39	0.47	0.52
		PI	1.09	1.09	1.09	1.09	1.09	1.09	1.11	1.11	1.11	1.11	1.11	1.09	1.09	1.09	1.09	1.09	1.09	1.11	1.11	1.11
	14°F(-10.0°C)	TC	13475	13963	13960	13957	13956	13953	14876	14872	14868	14867	14863	13475	13963	13960	13957	13956	13953	14876	14872	14868
		S/T	0.85	0.52	0.60	0.66	0.68	0.76	0.39	0.47	0.51	0.53	0.60	0.85	0.52	0.60	0.66	0.68	0.76	0.39	0.47	0.51
		PI	1.09	1.09	1.09	1.09	1.09	1.09	1.09	1.09	1.09	1.09	1.09	1.09	1.09	1.09	1.09	1.09	1.09	1.09	1.09	1.09
	17°F(-8.3°C)	TC	13456	13944	13944	13942	13942	13944	14886	14882	14878	14878	14878	13456	13944	13944	13942	13942	13944	14886	14882	14878
		S/T	0.85	0.52	0.60	0.67	0.68	0.76	0.39	0.47	0.52	0.53	0.61	0.85	0.52	0.60	0.67	0.68	0.76	0.39	0.47	0.52
		PI	1.09	1.09	1.09	1.09	1.09	1.09	1.09	1.09	1.09	1.09	1.09	1.09	1.09	1.09	1.09	1.09	1.09	1.09	1.09	1.09
	23°F(-5.0°C)	TC	13596	14097	14096	14094	14093	14095	15058	15053	15050	15049	15049	13596	14097	14096	14094	14093	14095	15058	15053	15050
		S/T	0.86	0.52	0.60	0.67	0.69	0.77	0.39	0.47	0.52	0.53	0.61	0.86	0.52	0.60	0.67	0.69	0.77	0.39	0.47	0.52
		PI	1.08	1.08	1.08	1.08	1.08	1.08	1.10	1.10	1.10	1.10	1.10	1.08	1.08	1.08	1.08	1.08	1.08	1.10	1.10	1.10
	35°F(1.7°C)	TC	13912	14401	14398	14397	14397	14394	15307	15304	15301	15301	15300	13912	14401	14398	14397	14397	14394	15307	15304	15301
		S/T	0.81	0.51	0.58	0.64	0.65	0.73	0.39	0.46	0.50	0.51	0.58	0.81	0.51	0.58	0.64	0.65	0.73	0.39	0.46	0.50
		PI	1.03	1.07	1.07	1.07	1.07	1.07	1.16	1.16	1.16	1.16	1.16	1.03	1.07	1.07	1.07	1.07	1.07	1.16	1.16	1.16
	41°F(5.0°C)	TC	13998	14486	14483	14482	14482	14479	15392	15389	15386	15385	15384	13998	14486	14483	14482	14482	14479	15392	15389	15386
		S/T	0.82	0.51	0.59	0.65	0.66	0.73	0.39	0.46	0.51	0.52	0.59	0.82	0.51	0.59	0.65	0.66	0.73	0.39	0.46	0.51
		PI	1.10	1.15	1.15	1.15	1.15	1.15	1.25	1.25	1.25	1.25	1.25	1.10	1.15	1.15	1.15	1.15	1.15	1.25	1.25	1.25
	47°F(8.3°C)	TC	14082	14571	14568	14567	14566	14564	15476	15472	15469	15469	15467	14082	14571	14568	14567	14566	14564	15476	15472	15469
		S/T	0.83	0.51	0.59	0.65	0.66	0.74	0.39	0.46	0.51	0.52	0.59	0.83	0.51	0.59	0.65	0.66	0.74	0.39	0.46	0.51
		PI	1.17	1.23	1.23	1.23	1.23	1.23	1.34	1.34	1.34	1.34	1.34	1.17	1.23	1.23	1.23	1.23	1.23	1.34	1.34	1.34
	50°F(10.0°C)	TC	14097	14619	14620	14627	14628	14634	15745	15739	15741	15740	15754	14097	14619	14620	14627	14628	14634	15745	15739	15741
		S/T	0.94	0.54	0.64	0.72	0.73	0.83	0.39	0.46	0.54	0.56	0.65	0.94	0.54	0.64	0.72	0.73	0.83	0.39	0.46	0.54
		PI	1.22	1.22	1.22	1.22	1.22	1.22	1.22	1.22	1.22	1.22	1.22	1.22	1.22	1.22	1.22	1.22	1.22	1.22	1.22	1.22
	59°F(15.0°C)	TC	14276	14804	14800	14806	14807	14811	15994	15987	15989	15988	16000	14276	14804	14800	14806	14807	14811	15994	15987	15989
		S/T	0.96	0.54	0.65	0.73	0.75	0.85	0.39	0.47	0.55	0.56	0.66	0.96	0.54	0.65	0.73	0.75	0.85	0.39	0.47	0.55
		PI	1.21	1.22	1.22	1.22	1.22	1.22	1.22	1.22	1.22	1.22	1.22	1.21	1.22	1.22	1.22	1.22	1.22	1.22	1.22	1.22
	68°F(20.0°C)	TC	14509	14983	14980	14986	14987	14989	16236	16229	16230	16229	16242	14509	14983	14980	14986	14987	14989	16236	16229	16230
		S/T	1.00	0.55	0.66	0.75	0.77	0.87	0.39	0.47	0.56	0.57	0.67	1.00	0.55	0.66	0.75	0.77	0.87	0.39	0.47	0.56
		PI	1.20	1.21	1.21	1.21	1.21	1.21	1.22	1.22	1.22	1.22	1.22	1.20	1.21	1.21	1.21	1.21	1.21	1.22	1.22	1.22
	77°F(25.0°C)	TC	14776	15158	15157	15165	15167	15185	16490	16482	16484	16484	16503	14776	15158	15157	15165	15167	15185	16490	16482	16484
		S/T	1.00	0.55	0.67	0.76	0.78	0.88	0.39	0.48	0.56	0.58	0.68	1.00	0.55	0.67	0.76	0.78	0.88	0.39	0.48	0.56
		PI	1.20	1.20	1.20	1.20	1.20	1.20	1.21	1.21	1.21	1.21	1.21	1.20	1.20	1.20	1.20	1.20	1.20	1.21	1.21	1.21
	82°F(27.8°C)	TC	14677	15000	15001	15010	15011	15037	16350	16342	16345	16347	16369	14677	15000	15001	15010	15011	15037	16350	16342	16345
		S/T	1.00	0.56	0.67	0.77	0.78	0.89	0.39	0.48	0.57	0.58	0.68	1.00	0.56	0.67	0.77	0.78	0.89	0.39	0.48	0.57
		PI	1.22	1.22	1.22	1.22	1.22	1.22	1.23	1.23	1.23	1.23	1.23	1.22	1.22	1.22	1.22	1.22	1.22	1.23	1.23	1.23
	86°F(30.0°C)	TC	14303	14554	14556	14563	14564	14597	15883	15875	15878	15881	15901	14303	14554	14556	14563	14564	14597	15883	15875	15878
		S/T	1.00	0.56	0.68	0.77	0.79	0.90	0.39	0.48	0.57	0.59	0.69	1.00	0.56	0.68	0.77	0.79	0.90	0.39	0.48	0.57
		PI	1.26	1.26	1.26	1.26	1.26	1.26	1.27	1.27	1.27	1.27	1.27	1.26	1.26	1.26	1.26	1.26	1.26	1.27	1.27	1.27
	95°F(35.0°C)	TC	12974	13563	13562	13559	13559	13559	14698	14693	14689	14688	14688	12974	13563	13562	13559	13559	13559	14698	14693	14689
		S/T	0.87	0.52	0.60	0.67	0.69	0.77	0.39	0.47	0.52	0.53	0.61	0.87	0.52	0.60	0.67	0.69	0.77	0.39	0.47	0.52
		PI	1.32	1.35	1.35	1.35	1.35	1.35	1.41	1.41	1.41	1.41	1.41	1.32	1.35	1.35	1.35	1.35	1.35	1.41	1.41	1.41
	104°F(40.0°C)	TC	10478	10952	10951	10948	10949	10950	11866	11862	11859	11858	11858	10478	10952	10951	10948	10949	10950	11866	11862	11859
		S/T	0.89	0.52	0.61	0.69	0.70	0.79	0.39	0.45	0.52	0.54	0.62	0.89	0.52	0.61	0.69	0.70	0.79	0.39	0.45	0.52
		PI	1.15	1.17	1.17	1.17	1.17	1.17	1.22	1.22	1.22	1.22	1.22	1.15	1.17	1.17	1.17	1.17	1.17	1.22	1.22	1.22
	110°F(43.0°C)	TC	9008	9383	9382	9382	9383	9385	10205	10201	10201	10201	10200	9008	9383	9382	9382	9383	9385	10205	10201	10201
		S/T	0.96	0.54	0.65	0.73	0.75	0.85	0.39	0.47	0.55	0.56	0.66	0.96	0.54	0.65	0.73	0.75	0.85	0.39	0.47	0.55
		PI	1.05	1.07	1.07	1.07	1.07	1.07	1.10	1.10	1.10	1.10	1.10	1.05	1.07	1.07	1.07	1.07	1.07	1.10	1.10	1.10
	115°F(46.0°C)	TC	8213	8460	8459	8461	8462	8462	9220	9216	9215	9214	9218	8213	8460	8459	8461	8462	8462	9220	9216	9215
		S/T	1.00	0.55	0.66	0.75	0.77	0.88	0.39	0.47	0.56	0.57	0.67	1.00	0.55	0.66	0.75	0.77	0.88	0.39	0.47	0.56
		PI	0.95	0.96	0.96	0.96	0.96	0.96	0.99	0.99	0.99	0.99	0.99	0.95	0.96	0.96	0.96	0.96	0.96	0.99	0.99	0.99
	122°F(50.0°C)	TC	7334	7231	7233	7233	7233	7342	7947	7942	7948	7948	7950	7334	7231	7233	7233	7233	7342	7947	7942	7948
		S/T	1.00	0.59	0.73	0.84	0.86	1.00	0.39	0.50	0.61	0.62	0.75	1.00	0.59	0.73	0.84	0.86	1.00	0.39	0.50	0.61
		PI	0.82	0.82	0.82	0.82	0.82	0.82	0.83	0.83	0.83	0.83	0.83	0.82	0.82	0.82	0.82	0.82	0.82	0.83	0.83	0.83

Table 3 – 18K Cooling Performance (Continued)

AIRFLOW (CFM)	OUTDOOR DB °F(°C)	ID WB °F(°C)	60.8°F(16.0°C)					64.4°F(18.0°C)					67°F(19.4°C)					71.6°F(22.0°C)				
		ID DB °F °C	73.4°F 23.0°C	77.0°F 25.0°C	80.0°F 26.7°C	80.6°F 27.0°C	84.2°F 29.0°C	73.4°F 23.0°C	77.0°F 25.0°C	80.0°F 26.7°C	80.6°F 27.0°C	84.2°F 29.0°C	73.4°F 23.0°C	77.0°F 25.0°C	80.0°F 26.7°C	80.6°F 27.0°C	84.2°F 29.0°C	73.4°F 23.0°C	77.0°F 25.0°C	80.0°F 26.7°C	80.6°F 27.0°C	84.2°F 29.0°C
432	-22°F(-30.0°C)	TC	12621	13018	13014	13010	13009	13003	13742	13738	13733	13732	13724	12621	13018	13014	13010	13009	13003	13742	13738	13733
		S/T	0.88	0.52	0.61	0.68	0.70	0.78	0.38	0.45	0.52	0.54	0.62	0.88	0.52	0.61	0.68	0.70	0.78	0.38	0.45	0.52
		PI	1.11	1.11	1.11	1.11	1.11	1.11	1.11	1.11	1.11	1.11	1.11	1.11	1.11	1.11	1.11	1.11	1.11	1.11	1.11	1.11
	-13°F(-25.0°C)	TC	13673	14103	14099	14094	14093	14086	14887	14883	14877	14877	14867	13673	14103	14099	14094	14093	14086	14887	14883	14877
		S/T	0.88	0.52	0.61	0.69	0.70	0.79	0.38	0.46	0.53	0.54	0.62	0.88	0.52	0.61	0.69	0.70	0.79	0.38	0.46	0.53
		PI	1.16	1.15	1.15	1.15	1.15	1.15	1.15	1.15	1.15	1.15	1.15	1.16	1.15	1.15	1.15	1.15	1.15	1.15	1.15	1.15
	-4°F(-20.0°C)	TC	14724	15188	15183	15178	15177	15170	16032	16028	16022	16021	16011	14724	15188	15183	15178	15177	15170	16032	16028	16022
		S/T	0.88	0.53	0.61	0.69	0.70	0.79	0.39	0.46	0.53	0.54	0.63	0.88	0.53	0.61	0.69	0.70	0.79	0.39	0.46	0.53
		PI	1.20	1.19	1.19	1.19	1.19	1.19	1.19	1.19	1.19	1.19	1.19	1.20	1.19	1.19	1.19	1.19	1.19	1.19	1.19	1.19
	0°F(-17.8°C)	TC	15195	15673	15666	15660	15658	15649	16526	16522	16521	16520	16522	15195	15673	15666	15660	15658	15649	16526	16522	16521
		S/T	0.90	0.53	0.62	0.70	0.71	0.80	0.39	0.46	0.53	0.55	0.63	0.90	0.53	0.62	0.70	0.71	0.80	0.39	0.46	0.53
		PI	1.21	1.21	1.21	1.21	1.21	1.21	1.22	1.22	1.22	1.22	1.22	1.21	1.21	1.21	1.21	1.21	1.21	1.22	1.22	1.22
	5°F(-15.0°C)	TC	15758	16262	16261	16262	16262	16266	17261	17256	17257	17256	17257	15758	16262	16261	16262	16262	16266	17261	17256	17257
		S/T	0.90	0.53	0.62	0.70	0.72	0.81	0.39	0.46	0.54	0.55	0.64	0.90	0.53	0.62	0.70	0.72	0.81	0.39	0.46	0.54
		PI	1.23	1.23	1.23	1.23	1.23	1.23	1.25	1.25	1.25	1.25	1.25	1.23	1.23	1.23	1.23	1.23	1.23	1.25	1.25	1.25
	14°F(-10.0°C)	TC	15662	16222	16216	16211	16210	16202	17257	17252	17245	17245	17233	15662	16222	16216	16211	16210	16202	17257	17252	17245
		S/T	0.89	0.53	0.62	0.69	0.71	0.79	0.39	0.46	0.53	0.54	0.63	0.89	0.53	0.62	0.69	0.71	0.79	0.39	0.46	0.53
		PI	1.23	1.23	1.23	1.23	1.23	1.23	1.23	1.23	1.23	1.23	1.23	1.23	1.23	1.23	1.23	1.23	1.23	1.23	1.23	1.23
	17°F(-8.3°C)	TC	15659	16191	16191	16194	16195	16200	17254	17248	17250	17249	17253	15659	16191	16191	16194	16195	16200	17254	17248	17250
		S/T	0.90	0.53	0.62	0.70	0.71	0.80	0.39	0.46	0.53	0.55	0.63	0.90	0.53	0.62	0.70	0.71	0.80	0.39	0.46	0.53
		PI	1.23	1.23	1.23	1.23	1.23	1.23	1.23	1.23	1.23	1.23	1.24	1.23	1.23	1.23	1.23	1.23	1.23	1.23	1.23	1.23
	23°F(-5.0°C)	TC	15831	16369	16368	16370	16371	16374	17453	17448	17449	17448	17450	15831	16369	16368	16370	16371	16374	17453	17448	17449
		S/T	0.91	0.53	0.63	0.71	0.72	0.81	0.39	0.46	0.54	0.55	0.64	0.91	0.53	0.63	0.71	0.72	0.81	0.39	0.46	0.54
		PI	1.22	1.22	1.22	1.22	1.22	1.22	1.24	1.24	1.24	1.24	1.24	1.22	1.22	1.22	1.22	1.22	1.22	1.24	1.24	1.24
	35°F(1.7°C)	TC	16185	16726	16725	16722	16722	16721	17732	17728	17724	17723	17723	16185	16726	16725	16722	16722	16721	17732	17728	17724
		S/T	0.85	0.52	0.60	0.67	0.68	0.76	0.39	0.47	0.52	0.53	0.60	0.85	0.52	0.60	0.67	0.68	0.76	0.39	0.47	0.52
		PI	1.16	1.21	1.21	1.21	1.21	1.21	1.31	1.31	1.31	1.31	1.31	1.16	1.21	1.21	1.21	1.21	1.21	1.31	1.31	1.31
	41°F(5.0°C)	TC	16283	16825	16824	16821	16821	16820	17830	17826	17822	17821	17820	16283	16825	16824	16821	16821	16820	17830	17826	17822
		S/T	0.86	0.52	0.60	0.67	0.69	0.77	0.39	0.45	0.52	0.53	0.61	0.86	0.52	0.60	0.67	0.69	0.77	0.39	0.45	0.52
		PI	1.24	1.30	1.30	1.30	1.30	1.30	1.41	1.41	1.41	1.41	1.41	1.24	1.30	1.30	1.30	1.30	1.30	1.41	1.41	1.41
	47°F(8.3°C)	TC	16380	16924	16922	16920	16919	16919	17929	17925	17922	17921	17920	16380	16924	16922	16920	16919	16919	17929	17925	17922
		S/T	0.87	0.52	0.61	0.68	0.69	0.78	0.39	0.45	0.52	0.53	0.62	0.87	0.52	0.61	0.68	0.69	0.78	0.39	0.45	0.52
		PI	1.32	1.38	1.38	1.38	1.38	1.38	1.51	1.51	1.51	1.51	1.51	1.32	1.38	1.38	1.38	1.38	1.38	1.51	1.51	1.51
	50°F(10.0°C)	TC	16611	16970	16979	16989	16990	17015	18233	18227	18248	18253	18277	16611	16970	16979	16989	16990	17015	18233	18227	18248
		S/T	1.00	0.55	0.66	0.76	0.77	0.88	0.39	0.48	0.56	0.58	0.68	1.00	0.55	0.66	0.76	0.77	0.88	0.39	0.48	0.56
		PI	1.38	1.38	1.38	1.38	1.38	1.38	1.38	1.38	1.38	1.38	1.38	1.38	1.38	1.38	1.38	1.38	1.38	1.38	1.38	1.38
	59°F(15.0°C)	TC	16936	17181	17189	17198	17199	17241	18529	18522	18540	18544	18563	16936	17181	17189	17198	17199	17241	18529	18522	18540
		S/T	1.00	0.56	0.68	0.77	0.79	0.90	0.39	0.48	0.57	0.59	0.69	1.00	0.56	0.68	0.77	0.79	0.90	0.39	0.48	0.57
		PI	1.37	1.37	1.37	1.37	1.37	1.37	1.38	1.38	1.38	1.38	1.38	1.37	1.37	1.37	1.37	1.37	1.37	1.38	1.38	1.38
	68°F(20.0°C)	TC	17283	17391	17401	17406	17407	17475	18814	18806	18824	18828	18843	17283	17391	17401	17406	17407	17475	18814	18806	18824
		S/T	1.00	0.57	0.69	0.79	0.81	0.93	0.39	0.49	0.58	0.60	0.71	1.00	0.57	0.69	0.79	0.81	0.93	0.39	0.49	0.58
		PI	1.36	1.36	1.36	1.36	1.36	1.36	1.38	1.38	1.38	1.38	1.38	1.36	1.36	1.36	1.36	1.36	1.36	1.38	1.38	1.38
	77°F(25.0°C)	TC	17575	17591	17606	17615	17616	17707	19100	19091	19121	19126	19148	17575	17591	17606	17615	17616	17707	19100	19091	19121
		S/T	1.00	0.57	0.70	0.80	0.82	0.94	0.39	0.49	0.59	0.60	0.72	1.00	0.57	0.70	0.80	0.82	0.94	0.39	0.49	0.59
		PI	1.36	1.36	1.36	1.36	1.36	1.36	1.37	1.37	1.37	1.37	1.37	1.36	1.36	1.36	1.36	1.36	1.36	1.37	1.37	1.37
	82°F(27.8°C)	TC	17461	17406	17425	17434	17435	17545	18935	18939	18962	18968	18992	17461	17406	17425	17434	17435	17545	18935	18939	18962
		S/T	1.00	0.58	0.70	0.81	0.83	0.96	0.39	0.49	0.59	0.61	0.72	1.00	0.58	0.70	0.81	0.83	0.96	0.39	0.49	0.59
		PI	1.38	1.38	1.38	1.38	1.38	1.38	1.39	1.39	1.39	1.39	1.39	1.38	1.38	1.38	1.38	1.38	1.38	1.39	1.39	1.39
	86°F(30.0°C)	TC	17018	16890	16908	16916	16917	17048	18395	18396	18423	18428	18450	17018	16890	16908	16916	16917	17048	18395	18396	18423
		S/T	1.00	0.58	0.71	0.82	0.84	0.97	0.39	0.50	0.60	0.61	0.73	1.00	0.58	0.71	0.82	0.84	0.97	0.39	0.50	0.60
		PI	1.42	1.42	1.42	1.42	1.42	1.42	1.44	1.44	1.44	1.44	1.44	1.42	1.42	1.42	1.42	1.42	1.42	1.44	1.44	1.44
	95°F(35.0°C)	TC	15113	15749	15749	15749	15749	15756	17033	17027	17022	17030	17025	15113	15749	15749	15749	15749	15756	17033	17027	17022
		S/T	0.91	0.53	0.62	0.70	0.72	0.81	0.39	0.46	0.53	0.55	0.63	0.91	0.53	0.62	0.70	0.72	0.81	0.39	0.46	0.53
		PI	1.49	1.52	1.52	1.52	1.52	1.52	1.59	1.59	1.59	1.59	1.59	1.49	1.52	1.52	1.52	1.52	1.52	1.59	1.59	1.59
	104°F(40.0°C)	TC	12225	12717	12716	12717	12718	12723	13750	13745	13741	13745	13744	12225	12717	12716	12717	12718	12723	13750	13745	13741
		S/T	0.94	0.54	0.64	0.72	0.73	0.83	0.39	0.46	0.54	0.55	0.65	0.94	0.54	0.64	0.72	0.73	0.83	0.39	0.46	0.54
		PI	1.30	1.32	1.32	1.32	1.32	1.32	1.38	1.38	1.38	1.38	1.38	1.30	1.32	1.32	1.32	1.32	1.32	1.38	1.38	1.38
	110°F(43.0°C)	TC	10703	10894	10894	10898	10898	10917	11824	11821	11821	11822	11831	10703	10894	10894	10898	10898	10917	11824	11821	11821
		S/T	1.00	0.56	0.68	0.77	0.79	0.90	0.39	0.48	0.57	0.59	0.69	1.00	0.56	0.68	0.77	0.79	0.90	0.39	0.48	0.57
		PI	1.19	1.20	1.20	1.20	1.20	1.20	1.24	1.24	1.24	1.24	1.24	1.19	1.20	1.20	1.20	1.20	1.20	1.24	1.24	1.24
	115°F(46.0°C)	TC	9772	9822	9825	9828	9828	9865	10685	10680	10684	10686	10694	9772	9822	9825	9828	9828	9865	10685	10680	10684
		S/T	1.00	0.57	0.69	0.80	0.82	0.94	0.39	0.49	0.58	0.60	0.71	1.00	0.57	0.69	0.80	0.82	0.94	0.39	0.49	0.58
		PI	1.08	1.08	1.08	1.08	1.08	1.08	1.12	1.11	1.11	1.11	1.11	1.08	1.08	1.08	1.08	1.08	1.08	1.12	1.11	1.11
	122°F(50.0°C)	TC	8711	8386	8388	8402	8411	8720	9197	9200	9208	9209	9207	8711	8386	8388	8402	8411	8720	9197	9200	9208
		S/T	1.00	0.62	0.77	0.89	0.92	1.00	0.40	0.52	0.64	0.66	0.79	1.00	0.62	0.77	0.89	0.92	1.00	0.40	0.52	0.64
		PI	0.93	0.93	0.92	0.92	0.92	0.93	0.94	0.94	0.94	0.94	0.94	0.93	0.93	0.92	0.92	0.92	0.93	0.94	0.94	0.94

Table 3 – 18K Cooling Performance (Continued)

AIRFLOW (CFM)	OUTDOOR DB °F(°C)	ID WB °F(°C)	60.8°F(16.0°C)					64.4°F(18.0°C)					67°F(19.4°C)					71.6°F(22.0°C)				
		ID DB °F °C	73.4°F 23.0°C	77.0°F 25.0°C	80.0°F 26.7°C	80.6°F 27.0°C	84.2°F 29.0°C	73.4°F 23.0°C	77.0°F 25.0°C	80.0°F 26.7°C	80.6°F 27.0°C	84.2°F 29.0°C	73.4°F 23.0°C	77.0°F 25.0°C	80.0°F 26.7°C	80.6°F 27.0°C	84.2°F 29.0°C	73.4°F 23.0°C	77.0°F 25.0°C	80.0°F 26.7°C	80.6°F 27.0°C	84.2°F 29.0°C
533	-22°F(-30.0°C)	TC	14664	15129	15121	15111	15109	15099	15959	15955	15943	15939	15915	14664	15129	15121	15111	15109	15099	15959	15955	15943
		S/T	0.93	0.53	0.63	0.71	0.73	0.82	0.38	0.46	0.54	0.55	0.64	0.93	0.53	0.63	0.71	0.73	0.82	0.38	0.46	0.54
		PI	1.27	1.26	1.26	1.26	1.26	1.26	1.27	1.27	1.27	1.27	1.27	1.27	1.26	1.26	1.26	1.26	1.26	1.27	1.27	1.27
	-13°F(-25.0°C)	TC	15886	16389	16381	16370	16368	16357	17289	17284	17271	17267	17241	15886	16389	16381	16370	16368	16357	17289	17284	17271
		S/T	0.93	0.54	0.63	0.71	0.73	0.83	0.39	0.46	0.54	0.56	0.65	0.93	0.54	0.63	0.71	0.73	0.83	0.39	0.46	0.54
		PI	1.31	1.31	1.31	1.31	1.31	1.31	1.32	1.32	1.32	1.32	1.32	1.31	1.31	1.31	1.31	1.31	1.31	1.32	1.32	1.32
	-4°F(-20.0°C)	TC	17108	17650	17641	17629	17627	17615	18619	18614	18600	18595	18568	17108	17650	17641	17629	17627	17615	18619	18614	18600
		S/T	0.93	0.54	0.64	0.72	0.73	0.83	0.39	0.47	0.55	0.56	0.65	0.93	0.54	0.64	0.72	0.73	0.83	0.39	0.47	0.55
		PI	1.36	1.36	1.36	1.36	1.36	1.36	1.36	1.36	1.36	1.36	1.36	1.36	1.36	1.36	1.36	1.36	1.36	1.36	1.36	1.36
	0°F(-17.8°C)	TC	17669	18216	18205	18189	18186	18170	19198	19192	19193	19195	19209	17669	18216	18205	18189	18186	18170	19198	19192	19193
		S/T	0.95	0.54	0.64	0.73	0.74	0.84	0.39	0.47	0.55	0.57	0.66	0.95	0.54	0.64	0.73	0.74	0.84	0.39	0.47	0.55
		PI	1.38	1.38	1.38	1.38	1.38	1.38	1.39	1.39	1.39	1.39	1.39	1.38	1.38	1.38	1.38	1.38	1.38	1.39	1.39	1.39
	5°F(-15.0°C)	TC	18383	18885	18883	18888	18889	18891	20013	20007	20008	20009	20020	18383	18885	18883	18888	18889	18891	20013	20007	20008
		S/T	0.96	0.54	0.65	0.73	0.75	0.85	0.39	0.47	0.55	0.57	0.66	0.96	0.54	0.65	0.73	0.75	0.85	0.39	0.47	0.55
		PI	1.40	1.40	1.40	1.40	1.40	1.41	1.43	1.43	1.43	1.43	1.43	1.40	1.40	1.40	1.40	1.40	1.41	1.43	1.43	1.43
	14°F(-10.0°C)	TC	18192	18852	18844	18829	18826	18811	20038	20032	20017	20013	19982	18192	18852	18844	18829	18826	18811	20038	20032	20017
		S/T	0.94	0.54	0.64	0.72	0.74	0.83	0.39	0.47	0.55	0.56	0.65	0.94	0.54	0.64	0.72	0.74	0.83	0.39	0.47	0.55
		PI	1.41	1.40	1.40	1.40	1.40	1.40	1.41	1.41	1.41	1.41	1.41	1.41	1.40	1.40	1.40	1.40	1.40	1.41	1.41	1.41
	17°F(-8.3°C)	TC	18301	18790	18797	18809	18810	18815	20039	20033	20035	20039	20058	18301	18790	18797	18809	18810	18815	20039	20033	20035
		S/T	0.95	0.55	0.65	0.73	0.75	0.85	0.39	0.47	0.55	0.57	0.66	0.95	0.55	0.65	0.73	0.75	0.85	0.39	0.47	0.55
		PI	1.40	1.40	1.40	1.40	1.40	1.40	1.41	1.41	1.41	1.41	1.41	1.40	1.40	1.40	1.40	1.40	1.40	1.41	1.41	1.41
	23°F(-5.0°C)	TC	18477	19008	19008	19014	19015	19018	20234	20228	20229	20231	20245	18477	19008	19008	19014	19015	19018	20234	20228	20229
		S/T	0.97	0.54	0.65	0.74	0.75	0.85	0.39	0.47	0.56	0.57	0.66	0.97	0.54	0.65	0.74	0.75	0.85	0.39	0.47	0.56
		PI	1.38	1.39	1.39	1.39	1.39	1.39	1.42	1.42	1.42	1.42	1.42	1.38	1.39	1.39	1.39	1.39	1.39	1.42	1.42	1.42
	35°F(1.7°C)	TC	18821	19426	19425	19423	19423	19425	20552	20547	20542	20545	20542	18821	19426	19425	19423	19423	19425	20552	20547	20542
		S/T	0.89	0.53	0.62	0.69	0.71	0.80	0.39	0.46	0.53	0.54	0.63	0.89	0.53	0.62	0.69	0.71	0.80	0.39	0.46	0.53
		PI	1.32	1.38	1.38	1.38	1.38	1.38	1.50	1.49	1.49	1.49	1.49	1.32	1.38	1.38	1.38	1.38	1.38	1.50	1.49	1.49
	41°F(5.0°C)	TC	18951	19541	19539	19538	19538	19540	20666	20661	20657	20659	20656	18951	19541	19539	19538	19538	19540	20666	20661	20657
		S/T	0.90	0.53	0.62	0.70	0.71	0.81	0.39	0.46	0.53	0.55	0.64	0.90	0.53	0.62	0.70	0.71	0.81	0.39	0.46	0.53
		PI	1.41	1.48	1.48	1.48	1.48	1.48	1.61	1.61	1.61	1.61	1.61	1.41	1.48	1.48	1.48	1.48	1.48	1.61	1.61	1.61
	47°F(8.3°C)	TC	19076	19656	19654	19652	19652	19654	20784	20779	20777	20776	20773	19076	19656	19654	19652	19652	19654	20784	20779	20777
		S/T	0.91	0.53	0.63	0.71	0.72	0.82	0.39	0.46	0.54	0.55	0.64	0.91	0.53	0.63	0.71	0.72	0.82	0.39	0.46	0.54
		PI	1.51	1.58	1.58	1.58	1.58	1.58	1.72	1.72	1.72	1.72	1.72	1.51	1.58	1.58	1.58	1.58	1.58	1.72	1.72	1.72
	50°F(10.0°C)	TC	19653	19696	19722	19733	19734	19823	21115	21125	21177	21182	21211	19653	19696	19722	19733	19734	19823	21115	21125	21177
		S/T	1.00	0.57	0.69	0.80	0.81	0.93	0.39	0.49	0.58	0.60	0.71	1.00	0.57	0.69	0.80	0.81	0.93	0.39	0.49	0.58
		PI	1.57	1.57	1.57	1.57	1.57	1.57	1.57	1.57	1.57	1.57	1.57	1.57	1.57	1.57	1.57	1.57	1.57	1.57	1.57	1.57
	59°F(15.0°C)	TC	20047	19946	19967	19975	19976	20108	21469	21475	21517	21522	21543	20047	19946	19967	19975	19976	20108	21469	21475	21517
		S/T	1.00	0.58	0.71	0.81	0.83	0.96	0.39	0.50	0.59	0.61	0.73	1.00	0.58	0.71	0.81	0.83	0.96	0.39	0.50	0.59
		PI	1.56	1.56	1.56	1.56	1.56	1.56	1.57	1.57	1.57	1.57	1.57	1.56	1.56	1.56	1.56	1.56	1.56	1.57	1.57	1.57
	68°F(20.0°C)	TC	20465	20195	20212	20218	20218	20448	21807	21814	21849	21853	21868	20465	20195	20212	20218	20218	20448	21807	21814	21849
		S/T	1.00	0.59	0.72	0.84	0.86	0.99	0.40	0.50	0.61	0.62	0.75	1.00	0.59	0.72	0.84	0.86	0.99	0.40	0.50	0.61
		PI	1.56	1.56	1.55	1.55	1.55	1.56	1.58	1.58	1.57	1.57	1.57	1.56	1.56	1.55	1.55	1.55	1.56	1.58	1.58	1.57
	77°F(25.0°C)	TC	20820	20427	20450	20460	20484	20838	22123	22144	22193	22198	22223	20820	20427	20450	20460	20484	20838	22123	22144	22193
		S/T	1.00	0.59	0.73	0.85	0.86	1.00	0.40	0.51	0.61	0.63	0.76	1.00	0.59	0.73	0.85	0.86	1.00	0.40	0.51	0.61
		PI	1.55	1.55	1.55	1.55	1.55	1.55	1.56	1.56	1.56	1.56	1.56	1.55	1.55	1.55	1.55	1.55	1.55	1.56	1.56	1.56
	82°F(27.8°C)	TC	20691	20213	20240	20250	20282	20709	21925	21953	22007	22014	22040	20691	20213	20240	20250	20282	20709	21925	21953	22007
		S/T	1.00	0.60	0.74	0.86	0.87	1.00	0.40	0.51	0.62	0.63	0.76	1.00	0.60	0.74	0.86	0.87	1.00	0.40	0.51	0.62
		PI	1.57	1.57	1.57	1.57	1.57	1.57	1.58	1.58	1.58	1.58	1.58	1.57	1.57	1.57	1.57	1.57	1.57	1.58	1.58	1.58
	86°F(30.0°C)	TC	20144	19594	19617	19648	19666	20163	21278	21309	21358	21364	21386	20144	19594	19617	19648	19666	20163	21278	21309	21358
		S/T	1.00	0.60	0.75	0.86	0.88	1.00	0.40	0.51	0.62	0.64	0.77	1.00	0.60	0.75	0.86	0.88	1.00	0.40	0.51	0.62
		PI	1.62	1.62	1.62	1.62	1.62	1.62	1.64	1.64	1.64	1.64	1.64	1.62	1.62	1.62	1.62	1.62	1.62	1.64	1.64	1.64
	95°F(35.0°C)	TC	17654	18281	18283	18292	18294	18302	19735	19728	19730	19729	19744	17654	18281	18283	18292	18294	18302	19735	19728	19730
		S/T	0.96	0.54	0.65	0.73	0.75	0.85	0.39	0.47	0.55	0.56	0.66	0.96	0.54	0.65	0.73	0.75	0.85	0.39	0.47	0.55
		PI	1.70	1.74	1.74	1.74	1.74	1.74	1.81	1.81	1.81	1.81	1.81	1.70	1.74	1.74	1.74	1.74	1.74	1.81	1.81	1.81
	104°F(40.0°C)	TC	14345	14760	14763	14771	14772	14777	15933	15927	15931	15928	15943	14345	14760	14763	14771	14772	14777	15933	15927	15931
		S/T	1.00	0.55	0.66	0.75	0.77	0.87	0.39	0.47	0.56	0.58	0.67	1.00	0.55	0.66	0.75	0.77	0.87	0.39	0.47	0.56
		PI	1.49	1.51	1.51	1.51	1.51	1.51	1.57	1.57	1.57	1.57	1.57	1.49	1.51	1.51	1.51	1.51	1.51	1.57	1.57	1.57
	110°F(43.0°C)	TC	12682	12646	12654	12658	12658	12732	13708	13702	13716	13718	13728	12682	12646	12654	12658	12658	12732	13708	13702	13716
		S/T	1.00	0.58	0.70	0.81	0.83	0.96	0.39	0.49	0.59	0.61	0.73	1.00	0.58	0.70	0.81	0.83	0.96	0.39	0.49	0.59
		PI	1.37	1.37	1.37	1.37	1.37	1.37	1.42	1.42	1.42	1.42	1.41	1.37	1.37	1.37	1.37	1.37	1.37	1.42	1.42	1.42
	115°F(46.0°C)	TC	11568	11402	11412	11415	11416	11579	12374	12368	12387	12389	12396	11568	11402	11412	11415	11416	11579	12374	12368	12387
		S/T	1.00	0.59	0.73	0.84	0.86	1.00	0.40	0.50	0.61	0.63	0.75	1.00	0.59	0.73	0.84	0.86	1.00	0.40	0.50	0.61
		PI	1.24	1.24	1.24	1.23	1.23	1.24	1.27	1.27	1.27	1.27	1.27	1.24	1.24	1.24	1.23	1.23	1.24	1.27	1.27	1.27
	122°F(50.0°C)	TC	10282	9708	9708	9759	9788	10291	10625	10646	10652	10651	10646	10282	9708	9708	9759	9788	10291	10625	10646	10652
		S/T	1.00	0.64	0.81	0.95	0.98	1.00	0.41	0.54	0.67	0.69	0.84	1.00	0.64	0.81	0.95	0.98	1.00	0.41	0.54	0.67
		PI	1.06	1.05	1.05	1.05	1.05	1.06	1.08	1.07	1.07	1.07	1.07	1.06	1.05	1.05	1.05	1.05	1.06	1.08	1.07	1.07

Table 3 – 18K Cooling Performance (Continued)

AIRFLOW (CFM)	OUTDOOR DB °F(°C)	ID WB °F(°C)	60.8°F(16.0°C)					64.4°F(18.0°C)					67°F(19.4°C)					71.6°F(22.0°C)				
		ID DB °F °C	73.4°F 23.0°C	77.0°F 25.0°C	80.0°F 26.7°C	80.6°F 27.0°C	84.2°F 29.0°C	73.4°F 23.0°C	77.0°F 25.0°C	80.0°F 26.7°C	80.6°F 27.0°C	84.2°F 29.0°C	73.4°F 23.0°C	77.0°F 25.0°C	80.0°F 26.7°C	80.6°F 27.0°C	84.2°F 29.0°C	73.4°F 23.0°C	77.0°F 25.0°C	80.0°F 26.7°C	80.6°F 27.0°C	84.2°F 29.0°C
638	-22°F(-30.0°C)	TC	17039	17590	17568	17551	17549	17532	18554	18549	18511	18504	18465	17039	17590	17568	17551	17549	17532	18554	18549	18511
		S/T	0.97	0.55	0.65	0.74	0.75	0.86	0.39	0.47	0.55	0.57	0.67	0.97	0.55	0.65	0.74	0.75	0.86	0.39	0.47	0.55
		PI	1.46	1.45	1.45	1.45	1.45	1.45	1.46	1.46	1.46	1.46	1.46	1.46	1.45	1.45	1.45	1.45	1.45	1.46	1.46	1.46
	-13°F(-25.0°C)	TC	18459	19056	19032	19014	19011	18993	20100	20095	20054	20046	20004	18459	19056	19032	19014	19011	18993	20100	20095	20054
		S/T	0.97	0.55	0.65	0.74	0.76	0.86	0.39	0.47	0.56	0.57	0.67	0.97	0.55	0.65	0.74	0.76	0.86	0.39	0.47	0.56
		PI	1.51	1.51	1.51	1.51	1.51	1.51	1.52	1.52	1.52	1.52	1.52	1.51	1.51	1.51	1.51	1.51	1.51	1.52	1.52	1.52
	-4°F(-20.0°C)	TC	19879	20522	20496	20477	20474	20454	21646	21641	21596	21588	21542	19879	20522	20496	20477	20474	20454	21646	21641	21596
		S/T	0.98	0.55	0.65	0.74	0.76	0.86	0.39	0.48	0.56	0.57	0.67	0.98	0.55	0.65	0.74	0.76	0.86	0.39	0.48	0.56
		PI	1.56	1.56	1.56	1.56	1.56	1.56	1.57	1.57	1.57	1.57	1.57	1.56	1.56	1.56	1.56	1.56	1.56	1.57	1.57	1.57
	0°F(-17.8°C)	TC	20744	21183	21153	21127	21123	21113	22322	22317	22315	22318	22333	20744	21183	21153	21127	21123	21113	22322	22317	22315
		S/T	1.00	0.55	0.66	0.75	0.77	0.87	0.39	0.48	0.57	0.58	0.68	1.00	0.55	0.66	0.75	0.77	0.87	0.39	0.48	0.57
		PI	1.58	1.59	1.59	1.59	1.59	1.59	1.60	1.60	1.60	1.60	1.60	1.58	1.59	1.59	1.59	1.59	1.59	1.60	1.60	1.60
	5°F(-15.0°C)	TC	21595	21929	21935	21939	21940	21969	23215	23208	23220	23223	23233	21595	21929	21935	21939	21940	21969	23215	23208	23220
		S/T	1.00	0.56	0.67	0.76	0.78	0.88	0.39	0.48	0.57	0.59	0.69	1.00	0.56	0.67	0.76	0.78	0.88	0.39	0.48	0.57
		PI	1.61	1.62	1.62	1.62	1.62	1.62	1.65	1.65	1.65	1.65	1.65	1.61	1.62	1.62	1.62	1.62	1.62	1.65	1.65	1.65
	14°F(-10.0°C)	TC	21356	21920	21892	21870	21867	21845	23308	23300	23256	23248	23198	21356	21920	21892	21870	21867	21845	23308	23300	23256
		S/T	1.00	0.55	0.66	0.75	0.76	0.87	0.39	0.48	0.56	0.57	0.67	1.00	0.55	0.66	0.75	0.76	0.87	0.39	0.48	0.56
		PI	1.61	1.61	1.61	1.61	1.61	1.61	1.62	1.62	1.62	1.62	1.62	1.61	1.61	1.61	1.61	1.61	1.61	1.62	1.62	1.62
	17°F(-8.3°C)	TC	21438	21830	21838	21847	21848	21875	23217	23211	23207	23211	23231	21438	21830	21838	21847	21848	21875	23217	23211	23207
		S/T	1.00	0.55	0.66	0.76	0.77	0.87	0.39	0.48	0.57	0.58	0.68	1.00	0.55	0.66	0.76	0.77	0.87	0.39	0.48	0.57
		PI	1.61	1.61	1.61	1.61	1.61	1.61	1.62	1.62	1.62	1.62	1.63	1.61	1.61	1.61	1.61	1.61	1.61	1.62	1.62	1.62
	23°F(-5.0°C)	TC	21742	22071	22079	22085	22085	22121	23469	23461	23478	23481	23495	21742	22071	22079	22085	22085	22121	23469	23461	23478
		S/T	1.00	0.56	0.67	0.76	0.78	0.89	0.39	0.48	0.57	0.59	0.69	1.00	0.56	0.67	0.76	0.78	0.89	0.39	0.48	0.57
		PI	1.60	1.60	1.60	1.60	1.60	1.60	1.63	1.63	1.63	1.63	1.63	1.60	1.60	1.60	1.60	1.60	1.60	1.63	1.63	1.63
	35°F(1.7°C)	TC	21935	22561	22559	22560	22561	22563	23831	23825	23824	23823	23825	21935	22561	22559	22560	22561	22563	23831	23825	23824
		S/T	0.93	0.54	0.63	0.72	0.73	0.83	0.39	0.46	0.54	0.56	0.65	0.93	0.54	0.63	0.72	0.73	0.83	0.39	0.46	0.54
		PI	1.52	1.58	1.58	1.58	1.58	1.58	1.72	1.72	1.72	1.72	1.72	1.52	1.58	1.58	1.58	1.58	1.58	1.72	1.72	1.72
	41°F(5.0°C)	TC	22085	22693	22692	22693	22694	22695	23967	23961	23959	23958	23961	22085	22693	22692	22693	22694	22695	23967	23961	23959
		S/T	0.94	0.54	0.64	0.72	0.74	0.84	0.39	0.47	0.55	0.56	0.66	0.94	0.54	0.64	0.72	0.74	0.84	0.39	0.47	0.55
		PI	1.63	1.70	1.70	1.70	1.70	1.70	1.85	1.85	1.85	1.85	1.85	1.63	1.70	1.70	1.70	1.70	1.70	1.85	1.85	1.85
	47°F(8.3°C)	TC	22241	22827	22825	22826	22826	22826	24105	24099	24097	24096	24098	22241	22827	22825	22826	22826	22826	24105	24099	24097
		S/T	0.96	0.54	0.65	0.73	0.75	0.85	0.39	0.47	0.55	0.57	0.67	0.96	0.54	0.65	0.73	0.75	0.85	0.39	0.47	0.55
		PI	1.74	1.81	1.81	1.81	1.81	1.81	1.98	1.98	1.98	1.98	1.98	1.74	1.81	1.81	1.81	1.81	1.81	1.98	1.98	1.98
	50°F(10.0°C)	TC	23153	22878	22908	22920	22921	23142	24455	24520	24583	24590	24621	23153	22878	22908	22920	22921	23142	24455	24520	24583
		S/T	1.00	0.59	0.72	0.83	0.85	0.99	0.40	0.50	0.60	0.62	0.74	1.00	0.59	0.72	0.83	0.85	0.99	0.40	0.50	0.60
		PI	1.81	1.81	1.81	1.81	1.81	1.81	1.81	1.81	1.81	1.81	1.81	1.81	1.81	1.81	1.81	1.81	1.81	1.81	1.81	1.81
	59°F(15.0°C)	TC	23625	23170	23194	23202	23235	23645	24880	24930	24980	24985	25006	23625	23170	23194	23202	23235	23645	24880	24930	24980
		S/T	1.00	0.60	0.73	0.85	0.86	1.00	0.40	0.51	0.61	0.63	0.76	1.00	0.60	0.73	0.85	0.86	1.00	0.40	0.51	0.61
		PI	1.80	1.80	1.80	1.80	1.80	1.80	1.81	1.81	1.81	1.81	1.81	1.80	1.80	1.80	1.80	1.80	1.80	1.81	1.81	1.81
	68°F(20.0°C)	TC	24083	23423	23441	23483	23504	24103	25239	25285	25325	25329	25342	24083	23423	23441	23483	23504	24103	25239	25285	25325
		S/T	1.00	0.61	0.75	0.87	0.89	1.00	0.40	0.51	0.63	0.65	0.78	1.00	0.61	0.75	0.87	0.89	1.00	0.40	0.51	0.63
		PI	1.79	1.79	1.79	1.79	1.79	1.79	1.81	1.81	1.81	1.81	1.81	1.79	1.79	1.79	1.79	1.79	1.79	1.81	1.81	1.81
	77°F(25.0°C)	TC	24498	23677	23704	23764	23791	24519	25573	25650	25709	25716	25740	24498	23677	23704	23764	23791	24519	25573	25650	25709
		S/T	1.00	0.61	0.76	0.88	0.90	1.00	0.40	0.52	0.63	0.65	0.79	1.00	0.61	0.76	0.88	0.90	1.00	0.40	0.52	0.63
		PI	1.78	1.78	1.78	1.78	1.78	1.78	1.80	1.80	1.80	1.80	1.79	1.78	1.78	1.78	1.78	1.78	1.78	1.80	1.80	1.80
	82°F(27.8°C)	TC	24337	23418	23448	23521	23550	24358	25320	25415	25482	25488	25516	24337	23418	23448	23521	23550	24358	25320	25415	25482
		S/T	1.00	0.62	0.77	0.89	0.92	1.00	0.40	0.52	0.64	0.66	0.80	1.00	0.62	0.77	0.89	0.92	1.00	0.40	0.52	0.64
		PI	1.81	1.80	1.80	1.80	1.80	1.81	1.82	1.82	1.82	1.82	1.82	1.81	1.80	1.80	1.80	1.80	1.81	1.82	1.82	1.82
	86°F(30.0°C)	TC	23706	22711	22738	22821	22854	23726	24588	24683	24741	24747	24770	23706	22711	22738	22821	22854	23726	24588	24683	24741
		S/T	1.00	0.62	0.78	0.91	0.93	1.00	0.40	0.52	0.64	0.66	0.81	1.00	0.62	0.78	0.91	0.93	1.00	0.40	0.52	0.64
		PI	1.87	1.86	1.86	1.86	1.86	1.87	1.89	1.89	1.88	1.88	1.88	1.87	1.86	1.86	1.86	1.86	1.87	1.89	1.89	1.88
	95°F(35.0°C)	TC	20813	21229	21233	21247	21248	21284	22875	22867	22871	22878	22908	20813	21229	21233	21247	21248	21284	22875	22867	22871
		S/T	1.00	0.56	0.67	0.76	0.78	0.88	0.39	0.48	0.57	0.58	0.68	1.00	0.56	0.67	0.76	0.78	0.88	0.39	0.48	0.57
		PI	1.97	2.00	2.00	2.00	2.00	2.00	2.08	2.08	2.08	2.08	2.08	1.97	2.00	2.00	2.00	2.00	2.00	2.08	2.08	2.08
	104°F(40.0°C)	TC	16962	17141	17147	17156	17157	17206	18475	18468	18476	18483	18502	16962	17141	17147	17156	17157	17206	18475	18468	18476
		S/T	1.00	0.56	0.68	0.78	0.80	0.91	0.39	0.48	0.58	0.59	0.70	1.00	0.56	0.68	0.78	0.80	0.91	0.39	0.48	0.58
		PI	1.72	1.73	1.73	1.73	1.73	1.74	1.81	1.81	1.80	1.81	1.81	1.72	1.73	1.73	1.73	1.73	1.74	1.81	1.81	1.80
	110°F(43.0°C)	TC	14960	14687	14699	14702	14713	14973	15897	15898	15923	15925	15934	14960	14687	14699	14702	14713	14973	15897	15898	15923
		S/T	1.00	0.60	0.73	0.85	0.86	1.00	0.40	0.51	0.61	0.63	0.76	1.00	0.60	0.73	0.85	0.86	1.00	0.40	0.51	0.61
		PI	1.59	1.58	1.58	1.58	1.58	1.59	1.63	1.63	1.63	1.63	1.63	1.59	1.58	1.58	1.58	1.58	1.59	1.63	1.63	1.63
	115°F(46.0°C)	TC	13640	13233	13241	13259	13272	13651	14348	14359	14379	14381	14385	13640	13233	13241	13259	13272	13651	14348	14359	14379
		S/T	1.00	0.61	0.75	0.87	0.90	1.00	0.40	0.52	0.63	0.65	0.78	1.00	0.61	0.75	0.87	0.90	1.00	0.40	0.52	0.63
		PI	1.43	1.42	1.42	1.42	1.42	1.43	1.46	1.46	1.46	1.46	1.46	1.43	1.42	1.42	1.42	1.42	1.43	1.46	1.46	1.46
	122°F(50.0°C)	TC	11985	11153	11149	11335	11420	11993	12178	12225	12228	12227	12243	11985	11153	11149	11335	11420	11993	12178	12225	12228
		S/T	1.00	0.67	0.85	1.00	1.00	1.00	0.41	0.55	0.69	0.72	0.88	1.00	0.67	0.85	1.00	1.00	1.00	0.41	0.55	0.69
		PI	1.22	1.21	1.21	1.21	1.21	1.22	1.24	1.23	1.23	1.23	1.23	1.22	1.21	1.21	1.21	1.21	1.22	1.24	1.23	1.23

Table 4 – 27K Cooling Performance

AIRFLOW (CFM)	OUTDOOR DB °F(°C)	ID WB °F(°C)	60.8°F(16.0°C)					64.4°F(18.0°C)					67°F(19.4°C)					71.6°F(22.0°C)				
		ID DB °F °C	73.4°F 23.0°C	77.0°F 25.0°C	80.0°F 26.7°C	80.6°F 27.0°C	84.2°F 29.0°C	73.4°F 23.0°C	77.0°F 25.0°C	80.0°F 26.7°C	80.6°F 27.0°C	84.2°F 29.0°C	73.4°F 23.0°C	77.0°F 25.0°C	80.0°F 26.7°C	80.6°F 27.0°C	84.2°F 29.0°C	73.4°F 23.0°C	77.0°F 25.0°C	80.0°F 26.7°C	80.6°F 27.0°C	84.2°F 29.0°C
539	-22°F(-30.0°C)	TC	14220	14218	14216	14216	14213	14882	14878	14875	14875	14872	15351	15347	15344	15343	15340	16231	16227	16223	16223	16217
		S/T	0.71	0.80	0.87	0.88	0.96	0.59	0.67	0.74	0.75	0.83	0.51	0.59	0.66	0.67	0.74	0.38	0.46	0.51	0.52	0.59
		PI	1.34	1.34	1.34	1.34	1.34	1.32	1.32	1.32	1.32	1.32	1.32	1.32	1.32	1.32	1.32	1.31	1.31	1.31	1.31	1.31
	-13°F(-25.0°C)	TC	15405	15403	15401	15400	15398	16122	16118	16115	16115	16112	16630	16626	16622	16622	16618	17584	17579	17575	17575	17569
		S/T	0.72	0.80	0.87	0.88	0.97	0.59	0.67	0.74	0.76	0.83	0.51	0.59	0.66	0.67	0.75	0.38	0.46	0.51	0.52	0.60
		PI	1.39	1.39	1.39	1.39	1.39	1.37	1.37	1.37	1.37	1.37	1.36	1.36	1.36	1.36	1.37	1.36	1.36	1.36	1.36	1.36
	-4°F(-20.0°C)	TC	16590	16588	16585	16585	16582	17362	17358	17355	17354	17351	17910	17905	17901	17900	17896	18937	18932	18927	18926	18920
		S/T	0.72	0.80	0.88	0.89	0.97	0.60	0.68	0.75	0.76	0.84	0.52	0.59	0.66	0.67	0.75	0.39	0.47	0.51	0.52	0.60
		PI	1.44	1.44	1.44	1.44	1.44	1.42	1.42	1.42	1.42	1.42	1.41	1.41	1.41	1.41	1.41	1.41	1.41	1.41	1.41	1.41
	0°F(-17.8°C)	TC	17130	17126	17124	17123	17118	17919	17916	17912	17911	17906	18478	18473	18469	18468	18463	19521	19516	19512	19511	19504
		S/T	0.72	0.81	0.88	0.90	0.98	0.60	0.68	0.75	0.76	0.85	0.52	0.60	0.67	0.68	0.76	0.39	0.47	0.52	0.53	0.60
		PI	1.45	1.45	1.45	1.45	1.45	1.44	1.44	1.44	1.44	1.44	1.44	1.44	1.44	1.44	1.44	1.44	1.44	1.44	1.44	1.44
	5°F(-15.0°C)	TC	17667	17667	17667	17667	17931	18549	18546	18545	18546	18547	19183	19182	19180	19179	19181	20400	20394	20389	20389	20389
		S/T	0.73	0.82	0.90	0.91	1.00	0.60	0.69	0.76	0.77	0.86	0.52	0.60	0.67	0.68	0.77	0.39	0.47	0.52	0.53	0.61
		PI	1.46	1.46	1.46	1.46	1.46	1.46	1.46	1.46	1.46	1.46	1.46	1.46	1.46	1.46	1.46	1.48	1.48	1.48	1.48	1.48
	14°F(-10.0°C)	TC	17623	17621	17618	17618	17704	18548	18543	18540	18540	18537	19209	19204	19199	19199	19195	20464	20458	20453	20452	20446
		S/T	0.73	0.81	0.89	0.90	0.99	0.60	0.68	0.75	0.76	0.85	0.52	0.60	0.66	0.68	0.76	0.39	0.47	0.51	0.53	0.60
		PI	1.43	1.44	1.44	1.44	1.43	1.42	1.42	1.42	1.42	1.42	1.42	1.42	1.42	1.42	1.42	1.42	1.42	1.42	1.42	1.42
	17°F(-8.3°C)	TC	17622	17618	17615	17615	17869	18546	18542	18538	18537	18537	19210	19209	19206	19206	19209	20507	20501	20496	20495	20496
		S/T	0.73	0.82	0.89	0.91	1.00	0.60	0.69	0.76	0.77	0.85	0.52	0.60	0.67	0.68	0.76	0.39	0.47	0.52	0.53	0.61
		PI	1.41	1.41	1.41	1.41	1.41	1.41	1.41	1.41	1.41	1.41	1.41	1.41	1.41	1.41	1.41	1.41	1.41	1.41	1.41	1.41
	23°F(-5.0°C)	TC	18345	18346	18345	18357	18693	19332	19328	19328	19329	19331	20043	20041	20038	20038	20040	21409	21402	21397	21396	21397
		S/T	0.74	0.83	0.90	0.91	1.00	0.61	0.69	0.77	0.78	0.86	0.52	0.60	0.67	0.69	0.77	0.39	0.47	0.52	0.53	0.61
		PI	1.45	1.45	1.45	1.45	1.45	1.46	1.46	1.46	1.46	1.46	1.46	1.46	1.46	1.46	1.46	1.48	1.48	1.48	1.48	1.48
	35°F(1.7°C)	TC	19944	19943	19941	19941	19968	20977	20975	20973	20972	20971	21708	21703	21702	21702	21698	23075	23070	23065	23064	23063
		S/T	0.70	0.78	0.85	0.86	0.93	0.59	0.66	0.72	0.74	0.81	0.51	0.58	0.64	0.65	0.73	0.39	0.46	0.50	0.51	0.58
		PI	1.43	1.43	1.43	1.43	1.43	1.51	1.51	1.51	1.51	1.51	1.57	1.57	1.57	1.57	1.57	1.71	1.71	1.71	1.71	1.71
	41°F(5.0°C)	TC	19312	19310	19309	19308	19354	20304	20302	20300	20299	20298	21006	21002	21000	21000	20996	22320	22315	22311	22310	22308
		S/T	0.71	0.79	0.86	0.87	0.95	0.59	0.67	0.73	0.74	0.82	0.51	0.59	0.65	0.66	0.73	0.39	0.46	0.51	0.52	0.59
		PI	1.40	1.40	1.40	1.40	1.40	1.49	1.49	1.49	1.49	1.49	1.55	1.55	1.55	1.55	1.55	1.69	1.69	1.69	1.69	1.69
	47°F(8.3°C)	TC	18676	18673	18672	18672	18737	19629	19627	19624	19624	19622	20304	20299	20298	20297	20294	21565	21560	21555	21555	21553
		S/T	0.71	0.80	0.87	0.88	0.96	0.59	0.67	0.74	0.75	0.83	0.51	0.59	0.65	0.66	0.74	0.39	0.46	0.51	0.52	0.59
		PI	1.37	1.37	1.37	1.37	1.38	1.46	1.46	1.46	1.46	1.46	1.53	1.53	1.53	1.53	1.53	1.67	1.67	1.67	1.67	1.67
	50°F(10.0°C)	TC	18331	18334	18503	18653	19345	19440	19444	19450	19451	19522	20244	20246	20255	20257	20265	21803	21795	21798	21797	21816
		S/T	0.79	0.89	0.99	1.00	1.00	0.64	0.74	0.82	0.84	0.94	0.54	0.64	0.72	0.73	0.83	0.39	0.46	0.54	0.56	0.65
		PI	1.54	1.54	1.54	1.54	1.54	1.54	1.54	1.54	1.54	1.54	1.54	1.54	1.54	1.54	1.54	1.54	1.54	1.54	1.54	1.54
	59°F(15.0°C)	TC	18127	18155	18512	18621	19349	19280	19284	19288	19289	19407	20124	20119	20127	20128	20134	21742	21733	21734	21734	21750
		S/T	0.80	0.91	1.00	1.00	1.00	0.65	0.75	0.84	0.86	0.96	0.54	0.65	0.73	0.75	0.85	0.39	0.47	0.55	0.56	0.66
		PI	1.55	1.55	1.56	1.56	1.56	1.56	1.56	1.56	1.56	1.56	1.57	1.57	1.57	1.57	1.57	1.58	1.58	1.58	1.58	1.58
	68°F(20.0°C)	TC	17936	17994	18502	18616	19377	19127	19130	19133	19133	19363	19996	19992	19999	20000	20004	21668	21659	21659	21658	21675
		S/T	0.82	0.94	1.00	1.00	1.00	0.66	0.77	0.86	0.88	1.00	0.55	0.66	0.75	0.77	0.87	0.39	0.47	0.56	0.57	0.67
		PI	1.57	1.57	1.58	1.58	1.59	1.58	1.58	1.58	1.58	1.59	1.59	1.59	1.59	1.59	1.59	1.61	1.61	1.61	1.61	1.61
	77°F(25.0°C)	TC	17716	17804	18415	18535	19333	18956	18962	18966	18985	19361	19862	19861	19871	19873	19896	21606	21596	21599	21599	21624
		S/T	0.83	0.96	1.00	1.00	1.00	0.66	0.78	0.88	0.89	1.00	0.55	0.67	0.76	0.78	0.88	0.39	0.48	0.56	0.58	0.68
		PI	1.60	1.60	1.61	1.61	1.62	1.61	1.61	1.61	1.61	1.62	1.62	1.62	1.62	1.62	1.62	1.64	1.64	1.64	1.64	1.64
	82°F(27.8°C)	TC	17471	17584	18258	18379	19191	18725	18734	18750	18766	19219	19643	19644	19655	19657	19690	21410	21400	21404	21406	21435
		S/T	0.84	0.97	1.00	1.00	1.00	0.67	0.79	0.88	0.90	1.00	0.56	0.67	0.77	0.78	0.89	0.39	0.48	0.57	0.58	0.68
		PI	1.64	1.65	1.65	1.65	1.66	1.66	1.66	1.66	1.66	1.66	1.67	1.67	1.67	1.67	1.67	1.68	1.68	1.68	1.68	1.68
	86°F(30.0°C)	TC	17122	17271	17991	18113	18927	18374	18382	18407	18425	18955	19287	19290	19300	19301	19345	21048	21038	21042	21046	21072
		S/T	0.85	0.98	1.00	1.00	1.00	0.67	0.80	0.89	0.91	1.00	0.56	0.68	0.77	0.79	0.90	0.39	0.48	0.57	0.59	0.69
		PI	1.71	1.72	1.72	1.73	1.74	1.73	1.73	1.73	1.73	1.74	1.74	1.74	1.74	1.74	1.74	1.76	1.76	1.76	1.76	1.76
	95°F(35.0°C)	TC	16594	16593	16595	16614	17039	17705	17701	17699	17700	17703	18506	18504	18501	18500	18501	20055	20048	20042	20041	20041
		S/T	0.74	0.83	0.91	0.92	1.00	0.61	0.69	0.77	0.78	0.87	0.52	0.60	0.67	0.69	0.77	0.39	0.47	0.52	0.53	0.61
		PI	1.81	1.81	1.81	1.81	1.83	1.86	1.86	1.86	1.86	1.86	1.90	1.90	1.90	1.90	1.90	1.98	1.98	1.98	1.99	1.98
	104°F(40.0°C)	TC	13844	13844	13869	13888	14351	14769	14765	14765	14765	14768	15436	15435	15432	15432	15434	16725	16719	16715	16714	16714
		S/T	0.75	0.85	0.93	0.95	1.00	0.61	0.71	0.78	0.80	0.89	0.52	0.61	0.69	0.70	0.79	0.39	0.45	0.52	0.54	0.62
		PI	1.69	1.69	1.69	1.69	1.71	1.74	1.74	1.74	1.74	1.74	1.77	1.77	1.77	1.77	1.77	1.85	1.85	1.85	1.85	1.85
	110°F(43.0°C)	TC	12115	12133	12405	12486	13011	12973	12971	12974	12974	13048	13591	13589	13590	13591	13595	14782	14776	14776	14776	14775
		S/T	0.80	0.91	1.00	1.00	1.00	0.64	0.75	0.84	0.86	0.96	0.54	0.65	0.73	0.75	0.85	0.39	0.47	0.55	0.56	0.66
		PI	1.63	1.63	1.64	1.65	1.67	1.67	1.67	1.67	1.67	1.67	1.70	1.70	1.70	1.70	1.70	1.75	1.75	1.75	1.75	1.75
	115°F(46.0°C)	TC	9773	9811	10146	10212	10659	10483	10484	10486	10486	10675	10996	10995	10998	10999	10999	11984	11979	11978	11977	11982
		S/T	0.83	0.95	1.00	1.00	1.00	0.66	0.77	0.87	0.89	1.00	0.55	0.66	0.75	0.77	0.88	0.39	0.47	0.56	0.57	0.67
		PI	1.51	1.51	1.52	1.52	1.54	1.54	1.54	1.54	1.54	1.55	1.56	1.56	1.56	1.56	1.56	1.60	1.60	1.60	1.60	1.60
	122°F(50.0°C)	TC	6633	6920	7224	7276	7637	7154	7154	7217	7286	7647	7539	7542	7542	7542	7655	8286	8281	8287	8287	8289
		S/T	0.93	1.00	1.00	1.00	1.00	0.72	0.86	0.99	1.00	1.00	0.59	0.73	0.84	0.86	1.00	0.39	0.50	0.61	0.62	0.75
		PI	1.35	1.36	1.37	1.37	1.38	1.36	1.36	1.37	1.37	1.38	1.38	1.38	1.38	1.38	1.38	1.40	1.40	1.40	1.40	1.40

Manufacturer reserves the right to change, at any time, specifications and designs without notice and without obligations.

Table 4 – 27K Cooling Performance (Continued)

AIRFLOW (CFM)	OUTDOOR DB °F(°C)	ID WB °F(°C)	60.8°F(16.0°C)					64.4°F(18.0°C)					67°F(19.4°C)					71.6°F(22.0°C)				
		ID DB °F °C	73.4°F 23.0°C	77.0°F 25.0°C	80.0°F 26.7°C	80.6°F 27.0°C	84.2°F 29.0°C	73.4°F 23.0°C	77.0°F 25.0°C	80.0°F 26.7°C	80.6°F 27.0°C	84.2°F 29.0°C	73.4°F 23.0°C	77.0°F 25.0°C	80.0°F 26.7°C	80.6°F 27.0°C	84.2°F 29.0°C	73.4°F 23.0°C	77.0°F 25.0°C	80.0°F 26.7°C	80.6°F 27.0°C	84.2°F 29.0°C
671	-22°F(-30.0°C)	TC	16456	16453	16449	16449	16786	17197	17192	17187	17187	17181	17722	17716	17710	17709	17701	18707	18702	18695	18694	18682
		S/T	0.74	0.83	0.91	0.93	0.99	0.61	0.70	0.77	0.79	0.88	0.52	0.61	0.68	0.70	0.78	0.38	0.45	0.52	0.54	0.62
		PI	1.49	1.49	1.49	1.49	1.49	1.48	1.48	1.48	1.48	1.48	1.48	1.48	1.48	1.48	1.48	1.48	1.48	1.48	1.48	1.48
	-13°F(-25.0°C)	TC	17827	17824	17820	17820	18185	18630	18625	18620	18619	18613	19199	19193	19186	19185	19176	20266	20261	20253	20252	20239
		S/T	0.75	0.84	0.92	0.93	1.00	0.61	0.70	0.78	0.79	0.88	0.52	0.61	0.69	0.70	0.79	0.38	0.46	0.53	0.54	0.62
		PI	1.55	1.55	1.55	1.55	1.54	1.54	1.54	1.54	1.54	1.54	1.53	1.53	1.53	1.53	1.53	1.53	1.53	1.53	1.53	1.53
	-4°F(-20.0°C)	TC	19199	19195	19191	19190	19584	20063	20057	20052	20051	20044	20676	20669	20662	20660	20651	21825	21819	21811	21810	21796
		S/T	0.75	0.84	0.92	0.94	1.00	0.61	0.71	0.78	0.79	0.88	0.53	0.61	0.69	0.70	0.79	0.39	0.46	0.53	0.54	0.63
		PI	1.60	1.61	1.61	1.61	1.60	1.59	1.59	1.59	1.59	1.59	1.58	1.59	1.59	1.59	1.59	1.59	1.59	1.59	1.59	1.59
	0°F(-17.8°C)	TC	19826	19821	19817	19816	20310	20710	20703	20695	20694	20685	21336	21327	21318	21316	21303	22497	22492	22490	22489	22491
		S/T	0.75	0.85	0.93	0.95	1.00	0.62	0.71	0.79	0.80	0.90	0.53	0.62	0.70	0.71	0.80	0.39	0.46	0.53	0.55	0.63
		PI	1.62	1.62	1.62	1.62	1.61	1.61	1.61	1.61	1.61	1.61	1.61	1.61	1.61	1.61	1.61	1.62	1.62	1.62	1.62	1.62
	5°F(-15.0°C)	TC	20429	20431	20495	20524	21124	21424	21423	21426	21427	21452	22137	22136	22138	22138	22143	23498	23492	23492	23491	23492
		S/T	0.76	0.86	0.94	0.96	1.00	0.62	0.72	0.80	0.81	0.90	0.53	0.62	0.70	0.72	0.81	0.39	0.46	0.54	0.55	0.64
		PI	1.63	1.63	1.63	1.63	1.63	1.63	1.63	1.63	1.63	1.63	1.64	1.64	1.64	1.64	1.64	1.67	1.67	1.67	1.67	1.67
	14°F(-10.0°C)	TC	20390	20385	20381	20381	20959	21431	21425	21419	21418	21411	22176	22169	22161	22159	22149	23591	23584	23575	23574	23559
		S/T	0.75	0.85	0.93	0.95	1.00	0.62	0.71	0.79	0.80	0.89	0.53	0.62	0.69	0.71	0.79	0.39	0.46	0.53	0.54	0.63
		PI	1.60	1.61	1.61	1.61	1.60	1.60	1.60	1.60	1.60	1.60	1.59	1.59	1.59	1.59	1.59	1.59	1.59	1.59	1.59	1.59
	17°F(-8.3°C)	TC	20375	20368	20421	20450	21063	21415	21408	21413	21414	21436	22165	22165	22168	22170	22177	23619	23612	23615	23613	23619
		S/T	0.76	0.86	0.94	0.96	1.00	0.62	0.72	0.80	0.81	0.90	0.53	0.62	0.70	0.71	0.80	0.39	0.46	0.53	0.55	0.63
		PI	1.58	1.58	1.58	1.58	1.58	1.58	1.58	1.58	1.58	1.58	1.58	1.58	1.58	1.58	1.58	1.58	1.58	1.58	1.58	1.58
	23°F(-5.0°C)	TC	21214	21216	21303	21341	22042	22328	22327	22331	22331	22367	23127	23127	23129	23130	23135	24659	24652	24653	24652	24656
		S/T	0.77	0.87	0.95	0.97	1.00	0.62	0.72	0.80	0.82	0.91	0.53	0.63	0.71	0.72	0.81	0.39	0.46	0.54	0.55	0.64
		PI	1.62	1.62	1.62	1.62	1.63	1.63	1.63	1.63	1.63	1.63	1.64	1.64	1.64	1.64	1.64	1.66	1.66	1.66	1.66	1.66
	35°F(1.7°C)	TC	23101	23100	23100	23100	23397	24250	24245	24243	24243	24244	25056	25054	25050	25049	25048	26562	26556	26551	26549	26548
		S/T	0.73	0.81	0.89	0.90	1.00	0.60	0.68	0.76	0.77	0.85	0.52	0.60	0.67	0.68	0.76	0.39	0.47	0.52	0.53	0.60
		PI	1.60	1.60	1.60	1.60	1.62	1.69	1.69	1.69	1.69	1.69	1.76	1.76	1.76	1.76	1.76	1.92	1.92	1.92	1.92	1.92
	41°F(5.0°C)	TC	22309	22363	22363	22370	22738	23469	23465	23463	23463	23464	24245	24243	24239	24239	24238	25693	25687	25682	25681	25679
		S/T	0.74	0.82	0.90	0.91	1.00	0.60	0.69	0.76	0.78	0.86	0.52	0.60	0.67	0.69	0.77	0.39	0.45	0.52	0.53	0.61
		PI	1.56	1.57	1.57	1.57	1.60	1.67	1.67	1.67	1.67	1.67	1.74	1.74	1.74	1.74	1.74	1.90	1.90	1.90	1.90	1.90
	47°F(8.3°C)	TC	21626	21625	21624	21646	22072	22687	22683	22681	22681	22681	23435	23432	23428	23428	23428	24827	24821	24816	24815	24813
		S/T	0.74	0.83	0.91	0.92	1.00	0.61	0.70	0.77	0.78	0.87	0.52	0.61	0.68	0.69	0.78	0.39	0.45	0.52	0.53	0.62
		PI	1.54	1.54	1.54	1.54	1.58	1.64	1.64	1.64	1.64	1.64	1.72	1.72	1.72	1.72	1.72	1.87	1.87	1.87	1.87	1.87
	50°F(10.0°C)	TC	21184	21274	21874	21999	22830	22441	22455	22461	22484	22859	23352	23366	23379	23381	23415	25092	25082	25111	25118	25152
		S/T	0.83	0.95	1.00	1.00	1.00	0.66	0.78	0.87	0.88	1.00	0.55	0.66	0.76	0.77	0.88	0.39	0.48	0.56	0.58	0.68
		PI	1.73	1.73	1.73	1.73	1.73	1.73	1.73	1.73	1.73	1.73	1.73	1.73	1.73	1.73	1.73	1.72	1.72	1.72	1.72	1.72
	59°F(15.0°C)	TC	20950	21100	21845	21976	22849	22261	22271	22305	22326	22878	23208	23220	23232	23233	23289	25031	25020	25045	25050	25076
		S/T	0.85	0.97	1.00	1.00	1.00	0.67	0.79	0.89	0.91	1.00	0.56	0.68	0.77	0.79	0.90	0.39	0.48	0.57	0.59	0.69
		PI	1.74	1.74	1.75	1.75	1.76	1.75	1.75	1.75	1.75	1.76	1.76	1.76	1.76	1.76	1.76	1.77	1.77	1.77	1.77	1.77
	68°F(20.0°C)	TC	20728	21077	21843	21979	22891	22085	22093	22154	22181	22921	23064	23076	23084	23085	23174	24951	24940	24964	24969	24989
		S/T	0.87	1.00	1.00	1.00	1.00	0.69	0.81	0.91	0.93	1.00	0.57	0.69	0.79	0.81	0.93	0.39	0.49	0.58	0.60	0.71
		PI	1.76	1.76	1.77	1.78	1.79	1.78	1.78	1.78	1.78	1.79	1.79	1.79	1.79	1.79	1.79	1.81	1.81	1.81	1.81	1.81
	77°F(25.0°C)	TC	20474	20951	21754	21897	22854	21889	21900	21984	22020	22884	22905	22925	22936	22937	23056	24870	24858	24897	24904	24932
		S/T	0.88	1.00	1.00	1.00	1.00	0.69	0.82	0.93	0.95	1.00	0.57	0.70	0.80	0.82	0.94	0.39	0.49	0.59	0.60	0.72
		PI	1.79	1.80	1.81	1.81	1.82	1.81	1.81	1.81	1.81	1.82	1.82	1.82	1.82	1.82	1.82	1.84	1.84	1.84	1.84	1.84
	82°F(27.8°C)	TC	20206	20755	21573	21718	22691	21623	21635	21739	21782	22722	22651	22675	22687	22688	22831	24640	24644	24675	24682	24714
		S/T	0.88	1.00	1.00	1.00	1.00	0.70	0.83	0.94	0.96	1.00	0.58	0.70	0.81	0.83	0.96	0.39	0.49	0.59	0.61	0.72
		PI	1.85	1.85	1.86	1.86	1.87	1.86	1.86	1.86	1.86	1.87	1.87	1.87	1.87	1.87	1.87	1.89	1.89	1.89	1.89	1.89
	86°F(30.0°C)	TC	19817	20442	21262	21406	22383	21219	21230	21356	21413	22412	22243	22266	22277	22278	22451	24225	24227	24262	24269	24297
		S/T	0.90	1.00	1.00	1.00	1.00	0.71	0.84	0.96	0.98	1.00	0.58	0.71	0.82	0.84	0.97	0.39	0.50	0.60	0.61	0.73
		PI	1.92	1.93	1.94	1.94	1.95	1.94	1.94	1.94	1.94	1.95	1.95	1.95	1.95	1.95	1.95	1.97	1.97	1.97	1.97	1.97
	95°F(35.0°C)	TC	19198	19202	19307	19357	20155	20453	20450	20455	20456	20493	21355	21355	21354	21355	21365	23096	23088	23081	23091	23085
		S/T	0.77	0.87	0.96	0.98	1.00	0.63	0.72	0.80	0.82	0.91	0.53	0.62	0.70	0.72	0.81	0.39	0.46	0.53	0.55	0.63
		PI	2.03	2.03	2.03	2.03	2.07	2.09	2.09	2.09	2.09	2.09	2.14	2.14	2.14	2.14	2.14	2.23	2.22	2.22	2.22	2.22
	104°F(40.0°C)	TC	16013	16015	16180	16329	16973	17057	17057	17062	17062	17123	17811	17811	17812	17813	17820	19259	19252	19246	19252	19251
		S/T	0.79	0.89	0.99	1.00	1.00	0.63	0.74	0.82	0.84	0.94	0.54	0.64	0.72	0.73	0.83	0.39	0.46	0.54	0.55	0.65
		PI	1.89	1.89	1.90	1.91	1.94	1.95	1.95	1.95	1.95	1.95	1.99	1.99	1.99	1.99	1.99	2.07	2.07	2.07	2.07	2.07
	110°F(43.0°C)	TC	14010	14117	14661	14756	15385	14978	14984	14997	15010	15407	15681	15680	15686	15687	15715	17020	17015	17015	17016	17029
		S/T	0.85	0.97	1.00	1.00	1.00	0.67	0.79	0.89	0.91	1.00	0.56	0.68	0.77	0.79	0.90	0.39	0.48	0.57	0.59	0.69
		PI	1.83	1.84	1.86	1.86	1.89	1.87	1.87	1.87	1.87	1.89	1.90	1.90	1.90	1.90	1.90	1.97	1.97	1.96	1.97	1.96
	115°F(46.0°C)	TC	11300	11542	11993	12072	12605	12106	12110	12143	12160	12622	12687	12690	12694	12695	12742	13801	13795	13800	13803	13813
		S/T	0.88	1.00	1.00	1.00	1.00	0.69	0.82	0.92	0.94	1.00	0.57	0.69	0.80	0.82	0.94	0.39	0.49	0.58	0.60	0.71
		PI	1.69	1.70	1.72	1.72	1.74	1.72	1.72	1.72	1.73	1.75	1.75	1.75	1.75	1.75	1.75	1.80	1.80	1.80	1.80	1.80
	122°F(50.0°C)	TC	7726	8162	8523	8586	9016	8249	8270	8533	8597	9026	8689	8691	8705	8715	9034	9529	9533	9541	9541	9540
		S/T	1.00	1.00	1.00	1.00	1.00	0.76	0.92	1.00	1.00	1.00	0.62	0.77	0.89	0.92	1.00	0.40	0.52	0.64	0.66	0.79
		PI	1.51	1.53	1.54	1.54	1.55	1.53	1.53	1.54	1.54	1.55	1.54	1.54	1.54	1.54	1.55	1.57	1.57	1.57	1.57	1.57

Table 4 – 27K Cooling Performance (Continued)

AIRFLOW (CFM)	OUTDOOR DB °F(°C)	ID WB °F(°C)	60.8°F(16.0°C)					64.4°F(18.0°C)					67°F(19.4°C)					71.6°F(22.0°C)				
		ID DB °F °C	73.4°F 23.0°C	77.0°F 25.0°C	80.0°F 26.7°C	80.6°F 27.0°C	84.2°F 29.0°C	73.4°F 23.0°C	77.0°F 25.0°C	80.0°F 26.7°C	80.6°F 27.0°C	84.2°F 29.0°C	73.4°F 23.0°C	77.0°F 25.0°C	80.0°F 26.7°C	80.6°F 27.0°C	84.2°F 29.0°C	73.4°F 23.0°C	77.0°F 25.0°C	80.0°F 26.7°C	80.6°F 27.0°C	84.2°F 29.0°C
810	-22°F(-30.0°C)	TC	19035	19028	19023	19133	19697	19873	19862	19853	19851	19838	20466	20455	20442	20439	20425	21589	21583	21567	21562	21530
		S/T	0.77	0.87	0.96	0.99	0.99	0.63	0.73	0.81	0.82	0.93	0.53	0.63	0.71	0.73	0.82	0.38	0.46	0.54	0.55	0.64
		PI	1.69	1.69	1.69	1.68	1.68	1.67	1.67	1.68	1.68	1.68	1.67	1.67	1.67	1.67	1.67	1.68	1.68	1.68	1.68	1.68
	-13°F(-25.0°C)	TC	20621	20614	20608	20728	21338	21529	21517	21507	21506	21491	22171	22160	22145	22143	22127	23388	23382	23365	23359	23324
		S/T	0.77	0.88	0.97	1.00	1.00	0.63	0.73	0.81	0.83	0.93	0.54	0.63	0.71	0.73	0.83	0.39	0.46	0.54	0.56	0.65
		PI	1.75	1.75	1.75	1.75	1.74	1.74	1.74	1.74	1.74	1.74	1.73	1.73	1.73	1.73	1.73	1.74	1.74	1.74	1.74	1.74
	-4°F(-20.0°C)	TC	22207	22199	22193	22322	22979	23185	23172	23162	23160	23144	23877	23865	23849	23846	23829	25187	25181	25162	25156	25118
		S/T	0.78	0.88	0.97	1.00	1.00	0.63	0.73	0.82	0.83	0.93	0.54	0.64	0.72	0.73	0.83	0.39	0.47	0.55	0.56	0.65
		PI	1.81	1.81	1.81	1.81	1.80	1.80	1.80	1.80	1.80	1.80	1.79	1.79	1.80	1.80	1.80	1.80	1.80	1.80	1.80	1.80
	0°F(-17.8°C)	TC	22940	22930	23019	23194	23837	23940	23922	23908	23906	23902	24642	24628	24606	24602	24580	25970	25963	25964	25967	25986
		S/T	0.78	0.89	0.99	1.00	1.00	0.64	0.74	0.83	0.84	0.95	0.54	0.64	0.73	0.74	0.84	0.39	0.47	0.55	0.57	0.66
		PI	1.83	1.83	1.83	1.82	1.82	1.82	1.82	1.82	1.82	1.82	1.82	1.82	1.82	1.82	1.82	1.84	1.84	1.84	1.84	1.84
	5°F(-15.0°C)	TC	23615	23636	23955	24065	24800	24738	24743	24746	24746	24868	25547	25545	25552	25553	25556	27074	27066	27066	27068	27083
		S/T	0.79	0.90	1.00	1.00	1.00	0.64	0.75	0.84	0.85	0.96	0.54	0.65	0.73	0.75	0.85	0.39	0.47	0.55	0.57	0.66
		PI	1.84	1.84	1.84	1.84	1.85	1.85	1.85	1.85	1.85	1.85	1.86	1.86	1.86	1.86	1.86	1.89	1.89	1.89	1.89	1.89
	14°F(-10.0°C)	TC	23572	23563	23661	23868	24608	24755	24741	24729	24727	24714	25611	25599	25579	25575	25554	27221	27213	27193	27187	27145
		S/T	0.78	0.89	0.99	1.00	1.00	0.64	0.74	0.82	0.84	0.94	0.54	0.64	0.72	0.74	0.83	0.39	0.47	0.55	0.56	0.65
		PI	1.81	1.82	1.81	1.81	1.81	1.81	1.81	1.81	1.81	1.81	1.80	1.80	1.80	1.80	1.80	1.81	1.81	1.81	1.81	1.81
	17°F(-8.3°C)	TC	23587	23593	23882	24020	24793	24771	24774	24779	24779	24897	25561	25571	25588	25589	25595	27261	27253	27256	27261	27286
		S/T	0.79	0.89	1.00	1.00	1.00	0.64	0.74	0.83	0.85	0.95	0.55	0.65	0.73	0.75	0.85	0.39	0.47	0.55	0.57	0.66
		PI	1.79	1.79	1.79	1.79	1.78	1.78	1.78	1.78	1.78	1.78	1.78	1.78	1.78	1.78	1.79	1.80	1.80	1.80	1.80	1.80
	23°F(-5.0°C)	TC	24521	24555	24955	25077	25897	25780	25786	25790	25790	25943	26689	26688	26696	26697	26702	28409	28401	28402	28406	28425
		S/T	0.80	0.91	1.00	1.00	1.00	0.65	0.75	0.84	0.86	0.97	0.54	0.65	0.74	0.75	0.85	0.39	0.47	0.56	0.57	0.66
		PI	1.83	1.83	1.84	1.84	1.85	1.84	1.84	1.84	1.84	1.85	1.86	1.86	1.86	1.86	1.86	1.89	1.89	1.89	1.89	1.89
	35°F(1.7°C)	TC	26735	26736	26788	26818	27507	28018	28014	28015	28016	28017	28918	28916	28913	28913	28917	30593	30586	30579	30584	30578
		S/T	0.75	0.85	0.93	0.94	1.00	0.62	0.71	0.79	0.80	0.89	0.53	0.62	0.69	0.71	0.80	0.39	0.46	0.53	0.54	0.63
		PI	1.81	1.81	1.81	1.81	1.87	1.92	1.92	1.92	1.92	1.92	2.00	2.00	2.00	2.00	2.00	2.17	2.17	2.17	2.17	2.17
	41°F(5.0°C)	TC	25880	25880	25952	25987	26725	27115	27112	27113	27113	27137	27983	27980	27978	27978	27981	29594	29587	29581	29584	29580
		S/T	0.76	0.86	0.94	0.96	1.00	0.62	0.72	0.80	0.81	0.90	0.53	0.62	0.70	0.71	0.81	0.39	0.46	0.53	0.55	0.64
		PI	1.78	1.78	1.78	1.79	1.85	1.89	1.89	1.89	1.89	1.89	1.97	1.97	1.97	1.97	1.97	2.15	2.15	2.15	2.15	2.15
	47°F(8.3°C)	TC	25022	25022	25118	25162	25936	26212	26209	26209	26209	26249	27047	27044	27042	27042	27044	28599	28592	28590	28589	28585
		S/T	0.77	0.87	0.95	0.97	1.00	0.63	0.72	0.81	0.82	0.91	0.53	0.63	0.71	0.72	0.82	0.39	0.46	0.54	0.55	0.64
		PI	1.74	1.74	1.75	1.76	1.83	1.86	1.86	1.86	1.86	1.86	1.94	1.94	1.94	1.94	1.94	2.12	2.12	2.12	2.12	2.12
	50°F(10.0°C)	TC	24476	24876	25707	25854	26845	25914	25930	26014	26047	26876	26935	26970	26985	26987	27109	28875	28889	28959	28967	29006
		S/T	0.87	1.00	1.00	1.00	1.00	0.69	0.81	0.92	0.94	1.00	0.57	0.69	0.80	0.81	0.93	0.39	0.49	0.58	0.60	0.71
		PI	1.96	1.96	1.96	1.96	1.96	1.96	1.96	1.96	1.96	1.96	1.96	1.96	1.96	1.96	1.96	1.95	1.95	1.95	1.95	1.95
	59°F(15.0°C)	TC	24229	24812	25686	25840	26880	25708	25719	25847	25896	26911	26775	26804	26815	26816	26993	28820	28828	28884	28891	28919
		S/T	0.88	1.00	1.00	1.00	1.00	0.70	0.83	0.94	0.97	1.00	0.58	0.71	0.81	0.83	0.96	0.39	0.50	0.59	0.61	0.73
		PI	1.97	1.98	1.98	1.98	1.99	1.98	1.98	1.98	1.98	1.99	1.99	1.99	1.99	1.99	1.99	2.00	2.00	2.00	2.00	2.00
	68°F(20.0°C)	TC	24005	24779	25691	25853	26940	25505	25513	25712	25880	26970	26615	26637	26644	26645	26948	28738	28748	28794	28799	28820
		S/T	0.91	1.00	1.00	1.00	1.00	0.72	0.85	0.97	1.00	1.00	0.59	0.72	0.84	0.86	0.99	0.40	0.50	0.61	0.62	0.75
		PI	1.99	2.00	2.01	2.02	2.03	2.01	2.01	2.01	2.02	2.03	2.03	2.03	2.02	2.02	2.03	2.05	2.05	2.05	2.05	2.05
	77°F(25.0°C)	TC	23734	24643	25599	25769	26908	25277	25289	25580	25799	26939	26431	26461	26474	26504	26963	28626	28652	28716	28723	28754
		S/T	0.92	1.00	1.00	1.00	1.00	0.72	0.87	0.99	1.00	1.00	0.59	0.73	0.85	0.86	1.00	0.40	0.51	0.61	0.63	0.76
		PI	2.03	2.04	2.05	2.05	2.06	2.05	2.05	2.05	2.05	2.06	2.06	2.06	2.06	2.06	2.06	2.08	2.08	2.08	2.08	2.08
	82°F(27.8°C)	TC	23424	24417	25390	25563	26726	24970	25011	25421	25594	26756	26138	26173	26186	26227	26780	28352	28388	28459	28467	28500
		S/T	0.94	1.00	1.00	1.00	1.00	0.73	0.87	1.00	1.00	1.00	0.60	0.74	0.86	0.87	1.00	0.40	0.51	0.62	0.63	0.76
		PI	2.09	2.10	2.11	2.11	2.12	2.11	2.11	2.11	2.11	2.12	2.12	2.12	2.12	2.12	2.12	2.14	2.14	2.14	2.14	2.14
	86°F(30.0°C)	TC	22958	24022	24996	25169	26342	24474	24525	25026	25199	26362	25642	25672	25713	25736	26387	27846	27886	27952	27959	27988
		S/T	0.95	1.00	1.00	1.00	1.00	0.74	0.88	1.00	1.00	1.00	0.60	0.75	0.86	0.88	1.00	0.40	0.51	0.62	0.64	0.77
		PI	2.18	2.19	2.20	2.20	2.22	2.20	2.20	2.20	2.20	2.22	2.21	2.21	2.21	2.21	2.22	2.24	2.24	2.23	2.23	2.23
	95°F(35.0°C)	TC	22194	22233	22710	22844	23740	23613	23619	23627	23628	23788	24633	24635	24648	24650	24661	26591	26582	26585	26583	26603
		S/T	0.80	0.91	1.00	1.00	1.00	0.65	0.75	0.84	0.86	0.96	0.54	0.65	0.73	0.75	0.85	0.39	0.47	0.55	0.56	0.66
		PI	2.29	2.30	2.32	2.33	2.37	2.37	2.37	2.37	2.37	2.37	2.42	2.42	2.42	2.42	2.42	2.52	2.52	2.52	2.52	2.52
	104°F(40.0°C)	TC	18509	18575	19111	19223	19985	19694	19700	19705	19706	19966	20545	20548	20559	20561	20567	22177	22169	22174	22170	22191
		S/T	0.82	0.94	1.00	1.00	1.00	0.66	0.77	0.86	0.88	1.00	0.55	0.66	0.75	0.77	0.87	0.39	0.47	0.56	0.58	0.67
		PI	2.14	2.14	2.17	2.18	2.22	2.21	2.21	2.21	2.21	2.22	2.25	2.25	2.25	2.25	2.25	2.35	2.35	2.35	2.35	2.35
	110°F(43.0°C)	TC	16194	16632	17262	17374	18120	17299	17305	17381	17414	18141	18089	18100	18106	18106	18212	19608	19600	19619	19622	19637
		S/T	0.89	1.00	1.00	1.00	1.00	0.70	0.83	0.94	0.96	1.00	0.58	0.70	0.81	0.83	0.96	0.39	0.49	0.59	0.61	0.73
		PI	2.07	2.09	2.12	2.12	2.15	2.12	2.12	2.12	2.12	2.16	2.16	2.16	2.15	2.15	2.16	2.23	2.23	2.22	2.22	2.22
	115°F(46.0°C)	TC	13078	13570	14104	14198	14831	13969	13972	14094	14216	14848	14635	14648	14652	14653	14862	15883	15876	15900	15903	15911
		S/T	0.92	1.00	1.00	1.00	1.00	0.72	0.86	0.98	1.00	1.00	0.59	0.73	0.84	0.86	1.00	0.40	0.50	0.61	0.63	0.75
		PI	1.91	1.93	1.95	1.95	1.98	1.95	1.94	1.95	1.96	1.98	1.98	1.98	1.98	1.98	1.98	2.03	2.03	2.03	2.03	2.03
	122°F(50.0°C)	TC	9072	9569	9995	10070	10576	9492	9566	10006	10082	10587	9996	9995	10048	10078	10596	10940	10961	10967	10967	10961
		S/T	1.00	1.00	1.00	1.00	1.00	0.80	0.98	1.00	1.00	1.00	0.64	0.81	0.95	0.98	1.00	0.41	0.54	0.67	0.69	0.84
		PI	1.72	1.73	1.75	1.75	1.76	1.73	1.73	1.75	1.75	1.76	1.75	1.75	1.75	1.75	1.76	1.78	1.78	1.78	1.78	1.78

Manufacturer reserves the right to change, at any time, specifications and designs without notice and without obligations.

Table 4 – 27K Cooling Performance (Continued)

AIRFLOW (CFM)	OUTDOOR DB °F(°C)	ID WB °F(°C)	60.8°F(16.0°C)					64.4°F(18.0°C)					67°F(19.4°C)					71.6°F(22.0°C)				
		ID DB °F °C	73.4°F 23.0°C	77.0°F 25.0°C	80.0°F 26.7°C	80.6°F 27.0°C	84.2°F 29.0°C	73.4°F 23.0°C	77.0°F 25.0°C	80.0°F 26.7°C	80.6°F 27.0°C	84.2°F 29.0°C	73.4°F 23.0°C	77.0°F 25.0°C	80.0°F 26.7°C	80.6°F 27.0°C	84.2°F 29.0°C	73.4°F 23.0°C	77.0°F 25.0°C	80.0°F 26.7°C	80.6°F 27.0°C	84.2°F 29.0°C
936	-22°F(-30.0°C)	TC	22006	21996	22310	22402	23019	22960	22941	22927	22925	22906	23647	23617	23595	23591	23569	24943	24936	24885	24875	24823
		S/T	0.80	0.91	0.99	0.99	0.99	0.64	0.75	0.84	0.86	0.97	0.55	0.65	0.74	0.75	0.86	0.39	0.47	0.55	0.57	0.67
		PI	1.92	1.92	1.92	1.92	1.91	1.91	1.91	1.91	1.91	1.91	1.91	1.91	1.91	1.91	1.91	1.92	1.92	1.92	1.92	1.92
	-13°F(-25.0°C)	TC	23840	23829	24169	24269	24937	24874	24853	24837	24835	24815	25617	25585	25561	25557	25533	27021	27014	26959	26948	26891
		S/T	0.80	0.91	1.00	1.00	1.00	0.65	0.75	0.85	0.86	0.97	0.55	0.65	0.74	0.76	0.86	0.39	0.47	0.56	0.57	0.67
		PI	1.99	1.99	1.99	1.99	1.98	1.98	1.98	1.98	1.98	1.98	1.98	1.98	1.98	1.98	1.98	1.99	1.99	1.99	1.99	1.99
	-4°F(-20.0°C)	TC	25674	25662	26028	26136	26855	26787	26765	26748	26745	26723	27588	27553	27527	27523	27497	29100	29092	29032	29021	28960
		S/T	0.80	0.92	1.00	1.00	1.00	0.65	0.76	0.85	0.87	0.98	0.55	0.65	0.74	0.76	0.86	0.39	0.48	0.56	0.57	0.67
		PI	2.06	2.07	2.06	2.06	2.05	2.05	2.05	2.05	2.05	2.06	2.05	2.05	2.05	2.05	2.05	2.06	2.06	2.06	2.06	2.06
	0°F(-17.8°C)	TC	26526	26510	27002	27115	27860	27664	27633	27612	27608	27886	28477	28436	28401	28397	28383	30008	30001	29999	30003	30022
		S/T	0.81	0.93	1.00	1.00	1.00	0.66	0.77	0.86	0.88	1.00	0.55	0.66	0.75	0.77	0.87	0.39	0.48	0.57	0.58	0.68
		PI	2.08	2.08	2.08	2.08	2.08	2.08	2.08	2.08	2.08	2.08	2.08	2.08	2.08	2.08	2.08	2.11	2.11	2.11	2.11	2.11
	5°F(-15.0°C)	TC	27286	27380	28006	28135	29003	28566	28573	28575	28605	29031	29480	29487	29493	29494	29533	31209	31199	31216	31219	31233
		S/T	0.82	0.94	1.00	1.00	1.00	0.66	0.78	0.87	0.88	1.00	0.56	0.67	0.76	0.78	0.88	0.39	0.48	0.57	0.59	0.69
		PI	2.10	2.10	2.10	2.10	2.11	2.11	2.11	2.11	2.11	2.12	2.12	2.12	2.12	2.12	2.12	2.17	2.17	2.17	2.17	2.17
	14°F(-10.0°C)	TC	27258	27244	27800	27930	28797	28611	28586	28566	28563	28830	29591	29554	29524	29519	29490	31465	31455	31395	31384	31317
		S/T	0.81	0.93	1.00	1.00	1.00	0.65	0.76	0.86	0.87	1.00	0.55	0.66	0.75	0.76	0.87	0.39	0.48	0.56	0.57	0.67
		PI	2.07	2.07	2.07	2.07	2.06	2.06	2.06	2.06	2.06	2.06	2.06	2.06	2.06	2.06	2.06	2.07	2.07	2.07	2.07	2.07
	17°F(-8.3°C)	TC	27184	27273	27903	28039	28950	28537	28549	28555	28578	28981	29511	29523	29534	29536	29572	31386	31378	31373	31379	31405
		S/T	0.82	0.93	1.00	1.00	1.00	0.66	0.77	0.87	0.88	1.00	0.55	0.66	0.76	0.77	0.87	0.39	0.48	0.57	0.58	0.68
		PI	2.04	2.04	2.04	2.04	2.04	2.04	2.04	2.04	2.04	2.04	2.04	2.04	2.04	2.04	2.04	2.06	2.06	2.06	2.06	2.06
	23°F(-5.0°C)	TC	28334	28456	29192	29336	30303	29768	29777	29781	29820	30335	30795	30806	30814	30815	30864	32745	32734	32758	32762	32781
		S/T	0.83	0.95	1.00	1.00	1.00	0.66	0.78	0.88	0.89	1.00	0.56	0.67	0.76	0.78	0.89	0.39	0.48	0.57	0.59	0.69
		PI	2.09	2.09	2.10	2.10	2.11	2.11	2.11	2.11	2.11	2.11	2.12	2.12	2.12	2.12	2.12	2.16	2.16	2.16	2.16	2.16
	35°F(1.7°C)	TC	30915	30916	31098	31185	32191	32360	32359	32362	32362	32448	33373	33371	33373	33374	33377	35252	35244	35242	35241	35244
		S/T	0.78	0.88	0.97	0.99	1.00	0.63	0.73	0.82	0.83	0.93	0.54	0.63	0.72	0.73	0.83	0.39	0.46	0.54	0.56	0.65
		PI	2.06	2.06	2.08	2.09	2.17	2.19	2.19	2.19	2.19	2.20	2.28	2.28	2.28	2.28	2.28	2.48	2.48	2.48	2.48	2.48
	41°F(5.0°C)	TC	29924	29925	30163	30373	31271	31316	31316	31317	31317	31427	32293	32291	32293	32293	32295	34105	34097	34095	34093	34097
		S/T	0.78	0.89	0.98	1.00	1.00	0.64	0.74	0.83	0.84	0.94	0.54	0.64	0.72	0.74	0.84	0.39	0.47	0.55	0.56	0.66
		PI	2.03	2.03	2.05	2.07	2.15	2.15	2.15	2.15	2.15	2.17	2.25	2.25	2.25	2.25	2.25	2.45	2.45	2.45	2.45	2.45
	47°F(8.3°C)	TC	28932	28951	29339	29471	30342	30273	30272	30273	30273	30413	31214	31211	31213	31213	31213	32961	32953	32950	32949	32952
		S/T	0.79	0.90	1.00	1.00	1.00	0.64	0.75	0.84	0.85	0.96	0.54	0.65	0.73	0.75	0.85	0.39	0.47	0.55	0.57	0.67
		PI	1.99	1.99	2.03	2.04	2.13	2.12	2.12	2.12	2.12	2.14	2.22	2.22	2.22	2.22	2.22	2.42	2.42	2.42	2.42	2.42
	50°F(10.0°C)	TC	28324	29104	30086	30260	31434	29923	29940	30147	30242	31464	31090	31131	31147	31149	31449	33234	33321	33407	33417	33459
		S/T	0.90	1.00	1.00	1.00	1.00	0.71	0.85	0.96	0.99	1.00	0.59	0.72	0.83	0.85	0.99	0.40	0.50	0.60	0.62	0.74
		PI	2.24	2.24	2.24	2.24	2.23	2.24	2.24	2.24	2.24	2.23	2.24	2.24	2.24	2.24	2.23	2.23	2.23	2.23	2.23	2.23
	59°F(15.0°C)	TC	28056	29040	30070	30253	31485	29684	29725	30062	30286	31516	30909	30940	30951	30996	31542	33190	33256	33322	33330	33358
		S/T	0.92	1.00	1.00	1.00	1.00	0.73	0.86	1.00	1.00	1.00	0.60	0.73	0.85	0.86	1.00	0.40	0.51	0.61	0.63	0.76
		PI	2.26	2.26	2.27	2.27	2.28	2.27	2.27	2.27	2.27	2.28	2.28	2.28	2.27	2.28	2.28	2.29	2.29	2.29	2.29	2.29
	68°F(20.0°C)	TC	27775	28961	30035	30226	31508	29404	29471	30067	30258	31539	30676	30699	30754	30781	31565	33053	33114	33166	33172	33189
		S/T	0.95	1.00	1.00	1.00	1.00	0.74	0.89	1.00	1.00	1.00	0.61	0.75	0.87	0.89	1.00	0.40	0.51	0.63	0.65	0.78
		PI	2.28	2.29	2.31	2.31	2.32	2.30	2.30	2.31	2.31	2.32	2.32	2.31	2.31	2.32	2.32	2.35	2.35	2.34	2.34	2.34
	77°F(25.0°C)	TC	27474	28797	29924	30123	31469	29126	29218	29956	30157	31501	30445	30479	30557	30591	31527	32882	32982	33058	33066	33097
		S/T	0.97	1.00	1.00	1.00	1.00	0.75	0.90	1.00	1.00	1.00	0.61	0.76	0.88	0.90	1.00	0.40	0.52	0.63	0.65	0.79
		PI	2.32	2.34	2.35	2.35	2.36	2.34	2.34	2.35	2.35	2.36	2.36	2.35	2.35	2.35	2.36	2.38	2.38	2.38	2.38	2.38
	82°F(27.8°C)	TC	27136	28521	29672	29873	31241	28756	28867	29697	29906	31274	30093	30131	30225	30262	31301	32537	32659	32745	32753	32789
		S/T	0.99	1.00	1.00	1.00	1.00	0.76	0.91	1.00	1.00	1.00	0.62	0.77	0.89	0.92	1.00	0.40	0.52	0.64	0.66	0.80
		PI	2.39	2.40	2.42	2.42	2.43	2.41	2.41	2.41	2.42	2.43	2.42	2.42	2.42	2.42	2.43	2.45	2.45	2.44	2.44	2.44
	86°F(30.0°C)	TC	26740	28075	29224	29427	30798	28200	28330	29256	29461	30830	29536	29570	29679	29721	30856	31976	32100	32176	32184	32214
		S/T	1.00	1.00	1.00	1.00	1.00	0.77	0.93	1.00	1.00	1.00	0.62	0.78	0.91	0.93	1.00	0.40	0.52	0.64	0.66	0.81
		PI	2.49	2.51	2.52	2.52	2.54	2.51	2.51	2.52	2.52	2.54	2.53	2.52	2.53	2.53	2.54	2.56	2.56	2.55	2.55	2.55
	95°F(35.0°C)	TC	25646	25784	26618	26775	27834	27256	27272	27281	27313	27869	28426	28432	28449	28452	28499	30630	30618	30625	30634	30675
		S/T	0.83	0.95	1.00	1.00	1.00	0.66	0.78	0.88	0.89	1.00	0.56	0.67	0.76	0.78	0.88	0.39	0.48	0.57	0.58	0.68
		PI	2.62	2.63	2.67	2.68	2.73	2.70	2.70	2.70	2.70	2.73	2.76	2.76	2.76	2.76	2.77	2.88	2.88	2.88	2.88	2.88
	104°F(40.0°C)	TC	21390	21586	22399	22533	23432	22738	22751	22791	22815	23461	23708	23718	23730	23731	23798	25554	25544	25556	25565	25591
		S/T	0.85	0.98	1.00	1.00	1.00	0.68	0.80	0.90	0.92	1.00	0.56	0.68	0.78	0.80	0.91	0.39	0.48	0.58	0.59	0.70
		PI	2.45	2.46	2.50	2.51	2.56	2.52	2.52	2.52	2.52	2.56	2.58	2.58	2.58	2.58	2.58	2.68	2.68	2.68	2.68	2.68
	110°F(43.0°C)	TC	18765	19486	20229	20360	21242	19978	19984	20207	20384	21264	20877	20893	20899	20914	21283	22597	22598	22633	22637	22650
		S/T	0.92	1.00	1.00	1.00	1.00	0.72	0.87	0.99	1.00	1.00	0.60	0.73	0.85	0.86	1.00	0.40	0.51	0.61	0.63	0.76
		PI	2.37	2.40	2.43	2.44	2.48	2.42	2.42	2.43	2.44	2.48	2.46	2.46	2.46	2.46	2.48	2.55	2.54	2.54	2.54	2.54
	115°F(46.0°C)	TC	15165	15896	16524	16647	17380	16127	16159	16543	16668	17398	16879	16889	16912	16929	17413	18302	18315	18341	18343	18349
		S/T	0.96	1.00	1.00	1.00	1.00	0.75	0.89	1.00	1.00	1.00	0.61	0.75	0.87	0.90	1.00	0.40	0.52	0.63	0.65	0.78
		PI	2.19	2.22	2.25	2.26	2.28	2.23	2.23	2.25	2.26	2.28	2.26	2.26	2.26	2.26	2.29	2.33	2.33	2.33	2.33	2.33
	122°F(50.0°C)	TC	10501	11080	11576	11663	12252	10836	11092	11589	11676	12263	11411	11408	11597	11685	12271	12460	12508	12511	12510	12527
		S/T	1.00	1.00	1.00	1.00	1.00	0.84	1.00	1.00	1.00	1.00	0.67	0.85	1.00	1.00	1.00	0.41	0.55	0.69	0.72	0.88
		PI	1.96	1.98	2.00	2.00	2.02	1.98	1.98	2.00	2.00	2.02	2.00	1.99	2.00	2.00	2.02	2.04	2.03	2.03	2.03	2.03

Manufacturer reserves the right to change, at any time, specifications and designs without notice and without obligations.

Table 5 – 36K Cooling Performance

AIRFLOW (CFM)	OUTDOOR DB °F(°C)	ID WB °F(°C)	60.8°F(16.0°C)					64.4°F(18.0°C)					67°F(19.4°C)					71.6°F(22.0°C)				
		ID DB °F °C	73.4°F 23.0°C	77.0°F 25.0°C	80.0°F 26.7°C	80.6°F 27.0°C	84.2°F 29.0°C	73.4°F 23.0°C	77.0°F 25.0°C	80.0°F 26.7°C	80.6°F 27.0°C	84.2°F 29.0°C	73.4°F 23.0°C	77.0°F 25.0°C	80.0°F 26.7°C	80.6°F 27.0°C	84.2°F 29.0°C	73.4°F 23.0°C	77.0°F 25.0°C	80.0°F 26.7°C	80.6°F 27.0°C	84.2°F 29.0°C
685	-22°F(-30.0°C)	TC	20344	20341	20338	20338	20334	21291	21285	21282	21281	21277	21962	21956	21951	21950	21946	23221	23215	23210	23209	23201
		S/T	0.71	0.80	0.87	0.88	0.96	0.59	0.67	0.74	0.75	0.83	0.51	0.59	0.66	0.67	0.74	0.38	0.46	0.51	0.52	0.59
		PI	2.42	2.42	2.42	2.42	2.42	2.39	2.39	2.39	2.39	2.39	2.38	2.38	2.38	2.38	2.38	2.37	2.37	2.37	2.37	2.37
	-13°F(-25.0°C)	TC	22039	22036	22033	22033	22029	23065	23059	23055	23055	23050	23792	23786	23781	23780	23774	25156	25150	25144	25143	25135
		S/T	0.72	0.80	0.87	0.88	0.97	0.59	0.67	0.74	0.76	0.83	0.51	0.59	0.66	0.67	0.75	0.38	0.46	0.51	0.52	0.60
		PI	2.51	2.51	2.51	2.51	2.51	2.48	2.48	2.48	2.48	2.48	2.47	2.47	2.47	2.47	2.47	2.46	2.46	2.46	2.46	2.46
	-4°F(-20.0°C)	TC	23734	23731	23728	23727	23723	24839	24833	24829	24828	24823	25622	25616	25610	25609	25603	27092	27084	27078	27077	27068
		S/T	0.72	0.80	0.88	0.89	0.97	0.60	0.68	0.75	0.76	0.84	0.52	0.59	0.66	0.67	0.75	0.39	0.47	0.51	0.52	0.60
		PI	2.60	2.60	2.60	2.60	2.60	2.57	2.57	2.57	2.57	2.57	2.56	2.56	2.56	2.56	2.56	2.55	2.55	2.55	2.55	2.55
	0°F(-17.8°C)	TC	24507	24502	24498	24497	24490	25636	25631	25625	25624	25618	26436	26429	26423	26422	26414	27927	27920	27915	27914	27903
		S/T	0.72	0.81	0.88	0.90	0.98	0.60	0.68	0.75	0.76	0.85	0.52	0.60	0.67	0.68	0.76	0.39	0.47	0.52	0.53	0.60
		PI	2.62	2.62	2.62	2.62	2.62	2.60	2.60	2.60	2.60	2.60	2.60	2.60	2.60	2.60	2.60	2.60	2.60	2.60	2.60	2.60
	5°F(-15.0°C)	TC	25275	25275	25275	25275	25653	26538	26533	26532	26532	26535	27445	27443	27439	27439	27441	29185	29177	29170	29169	29169
		S/T	0.73	0.82	0.90	0.91	1.00	0.60	0.69	0.76	0.77	0.86	0.52	0.60	0.67	0.68	0.77	0.39	0.47	0.52	0.53	0.61
		PI	2.65	2.65	2.65	2.65	2.65	2.64	2.64	2.64	2.64	2.64	2.65	2.65	2.65	2.65	2.65	2.68	2.68	2.68	2.68	2.68
	14°F(-10.0°C)	TC	25454	25451	25448	25447	25571	26791	26784	26779	26779	26774	27745	27739	27732	27731	27725	29558	29550	29543	29541	29532
		S/T	0.73	0.81	0.89	0.90	0.99	0.60	0.68	0.75	0.76	0.85	0.52	0.60	0.66	0.68	0.76	0.39	0.47	0.51	0.53	0.60
		PI	2.59	2.59	2.59	2.59	2.59	2.57	2.57	2.57	2.57	2.57	2.56	2.56	2.56	2.56	2.56	2.56	2.56	2.56	2.56	2.56
	17°F(-8.3°C)	TC	25533	25528	25524	25524	25892	26873	26866	26861	26860	26860	27834	27833	27829	27829	27833	29714	29705	29698	29697	29699
		S/T	0.73	0.82	0.89	0.91	1.00	0.60	0.69	0.76	0.77	0.85	0.52	0.60	0.67	0.68	0.76	0.39	0.47	0.52	0.53	0.61
		PI	2.55	2.55	2.55	2.55	2.55	2.54	2.54	2.54	2.54	2.54	2.54	2.54	2.54	2.54	2.54	2.54	2.54	2.54	2.54	2.54
	23°F(-5.0°C)	TC	25814	25815	25815	25832	26303	27203	27198	27198	27198	27201	28203	28201	28197	28197	28199	30126	30117	30110	30108	30109
		S/T	0.74	0.83	0.90	0.91	1.00	0.61	0.69	0.77	0.78	0.86	0.52	0.60	0.67	0.69	0.77	0.39	0.47	0.52	0.53	0.61
		PI	2.40	2.40	2.40	2.40	2.40	2.40	2.40	2.40	2.40	2.40	2.41	2.41	2.41	2.41	2.41	2.44	2.44	2.44	2.44	2.44
	35°F(1.7°C)	TC	26588	26586	26585	26584	26621	27966	27963	27960	27959	27957	28940	28934	28932	28932	28927	30762	30755	30749	30748	30747
		S/T	0.70	0.78	0.85	0.86	0.93	0.59	0.66	0.72	0.74	0.81	0.51	0.58	0.64	0.65	0.73	0.39	0.46	0.50	0.51	0.58
		PI	1.97	1.97	1.97	1.97	1.97	2.08	2.08	2.08	2.08	2.08	2.16	2.16	2.16	2.16	2.16	2.35	2.35	2.35	2.35	2.35
	41°F(5.0°C)	TC	26794	26791	26789	26789	26852	28171	28168	28164	28164	28162	29144	29138	29136	29136	29131	30967	30961	30954	30953	30951
		S/T	0.71	0.79	0.86	0.87	0.95	0.59	0.67	0.73	0.74	0.82	0.51	0.59	0.65	0.66	0.73	0.39	0.46	0.51	0.52	0.59
		PI	2.00	1.99	1.99	1.99	2.00	2.12	2.12	2.12	2.12	2.12	2.21	2.21	2.21	2.21	2.21	2.41	2.41	2.41	2.41	2.41
	47°F(8.3°C)	TC	26995	26991	26990	26990	27083	28372	28369	28366	28365	28363	29348	29342	29340	29339	29334	31171	31163	31157	31157	31154
		S/T	0.71	0.80	0.87	0.88	0.96	0.59	0.67	0.74	0.75	0.83	0.51	0.59	0.65	0.66	0.74	0.39	0.46	0.51	0.52	0.59
		PI	2.03	2.03	2.03	2.03	2.04	2.16	2.16	2.16	2.16	2.16	2.26	2.26	2.26	2.26	2.26	2.47	2.47	2.47	2.47	2.47
	50°F(10.0°C)	TC	26378	26382	26625	26841	27838	27974	27980	27988	27989	28092	29131	29134	29147	29149	29161	31375	31363	31367	31365	31393
		S/T	0.79	0.89	0.99	1.00	1.00	0.64	0.74	0.82	0.84	0.94	0.54	0.64	0.72	0.73	0.83	0.39	0.46	0.54	0.56	0.65
		PI	2.26	2.26	2.26	2.26	2.26	2.26	2.26	2.26	2.26	2.26	2.26	2.26	2.26	2.26	2.26	2.26	2.26	2.26	2.26	2.26
	59°F(15.0°C)	TC	25730	25769	26276	26430	27464	27366	27372	27377	27378	27546	28564	28557	28568	28570	28578	30860	30847	30850	30848	30871
		S/T	0.80	0.91	1.00	1.00	1.00	0.65	0.75	0.84	0.86	0.96	0.54	0.65	0.73	0.75	0.85	0.39	0.47	0.55	0.56	0.66
		PI	2.25	2.25	2.26	2.26	2.26	2.26	2.26	2.26	2.26	2.27	2.27	2.27	2.27	2.27	2.27	2.29	2.29	2.29	2.29	2.29
	68°F(20.0°C)	TC	25102	25184	25895	26054	27119	26769	26774	26777	26778	27099	27985	27980	27990	27991	27996	30325	30312	30313	30312	30335
		S/T	0.82	0.94	1.00	1.00	1.00	0.66	0.77	0.86	0.88	1.00	0.55	0.66	0.75	0.77	0.87	0.39	0.47	0.56	0.57	0.67
		PI	2.24	2.25	2.26	2.26	2.27	2.27	2.27	2.27	2.27	2.27	2.28	2.28	2.28	2.28	2.28	2.31	2.31	2.31	2.31	2.31
	77°F(25.0°C)	TC	24439	24560	25402	25568	26669	26148	26158	26163	26188	26707	27399	27397	27411	27413	27446	29805	29791	29795	29795	29830
		S/T	0.83	0.96	1.00	1.00	1.00	0.66	0.78	0.88	0.89	1.00	0.55	0.67	0.76	0.78	0.88	0.39	0.48	0.56	0.58	0.68
		PI	2.26	2.26	2.27	2.27	2.28	2.28	2.28	2.28	2.28	2.28	2.29	2.29	2.29	2.29	2.29	2.32	2.32	2.32	2.32	2.31
	82°F(27.8°C)	TC	23995	24150	25076	25243	26358	25718	25730	25752	25774	26396	26978	26980	26996	26998	27044	29406	29392	29397	29400	29439
		S/T	0.84	0.97	1.00	1.00	1.00	0.67	0.79	0.88	0.90	1.00	0.56	0.67	0.77	0.78	0.89	0.39	0.48	0.57	0.58	0.68
		PI	2.36	2.36	2.37	2.37	2.39	2.38	2.38	2.38	2.38	2.39	2.39	2.39	2.39	2.39	2.39	2.42	2.42	2.42	2.42	2.41
	86°F(30.0°C)	TC	23549	23754	24744	24911	26031	25270	25281	25316	25341	26069	26526	26530	26544	26546	26606	28949	28934	28940	28946	28982
		S/T	0.85	0.98	1.00	1.00	1.00	0.67	0.80	0.89	0.91	1.00	0.56	0.68	0.77	0.79	0.90	0.39	0.48	0.57	0.59	0.69
		PI	2.55	2.56	2.57	2.57	2.59	2.58	2.58	2.58	2.58	2.59	2.59	2.59	2.59	2.59	2.59	2.62	2.62	2.62	2.62	2.62
	95°F(35.0°C)	TC	22897	22896	22898	22924	23511	24430	24424	24423	24423	24428	25536	25533	25528	25528	25528	27673	27663	27655	27654	27654
		S/T	0.74	0.83	0.91	0.92	1.00	0.61	0.69	0.77	0.78	0.87	0.52	0.60	0.67	0.69	0.77	0.39	0.47	0.52	0.53	0.61
		PI	2.89	2.89	2.89	2.89	2.92	2.98	2.98	2.98	2.98	2.98	3.04	3.04	3.04	3.04	3.04	3.17	3.17	3.17	3.17	3.17
	104°F(40.0°C)	TC	17725	17725	17757	17781	18375	18909	18904	18904	18904	18908	19764	19762	19757	19758	19760	21413	21406	21400	21399	21399
		S/T	0.75	0.85	0.93	0.95	1.00	0.61	0.71	0.78	0.80	0.89	0.52	0.61	0.69	0.70	0.79	0.39	0.45	0.52	0.54	0.62
		PI	2.38	2.38	2.38	2.38	2.42	2.45	2.45	2.45	2.45	2.45	2.51	2.51	2.51	2.51	2.50	2.61	2.61	2.61	2.61	2.61
	110°F(43.0°C)	TC	14527	14548	14874	14971	15601	15555	15553	15556	15556	15645	16295	16294	16295	16296	16300	17725	17717	17717	17717	17716
		S/T	0.80	0.91	1.00	1.00	1.00	0.64	0.75	0.84	0.86	0.96	0.54	0.65	0.73	0.75	0.85	0.39	0.47	0.55	0.56	0.66
		PI	2.10	2.10	2.11	2.12	2.15	2.15	2.15	2.15	2.15	2.15	2.18	2.18	2.18	2.18	2.18	2.25	2.25	2.25	2.25	2.25
	115°F(46.0°C)	TC	13575	13626	14092	14184	14805	14560	14562	14564	14565	14827	15273	15272	15276	15277	15278	16645	16638	16636	16635	16643
		S/T	0.83	0.95	1.00	1.00	1.00	0.66	0.77	0.87	0.89	1.00	0.55	0.66	0.75	0.77	0.88	0.39	0.47	0.56	0.57	0.67
		PI	2.09	2.09	2.11	2.11	2.14	2.13	2.13	2.13	2.13	2.14	2.16	2.16	2.16	2.16	2.16	2.22	2.22	2.22	2.22	2.22
	122°F(50.0°C)	TC	12240	12769	13330	13427	14092	13201	13201	13317	13445	14111	13912	13916	13916	13916	14125	15289	15280	15291	15292	15295
		S/T	0.93	1.00	1.00	1.00	1.00	0.72	0.86	0.99	1.00	1.00	0.59	0.73	0.84	0.86	1.00	0.39	0.50	0.61	0.62	0.75
		PI	2.09	2.10	2.12	2.12	2.14	2.12	2.12	2.12	2.12	2.14	2.14	2.14	2.13	2.13	2.14	2.17	2.17	2.17	2.17	2.17

Manufacturer reserves the right to change, at any time, specifications and designs without notice and without obligations.

Table 5 – 36K Cooling Performance (Continued)

AIRFLOW (CFM)	OUTDOOR DB °F(°C)	ID WB °F(°C)	60.8°F(16.0°C)					64.4°F(18.0°C)					67°F(19.4°C)					71.6°F(22.0°C)				
		ID DB °F °C	73.4°F 23.0°C	77.0°F 25.0°C	80.0°F 26.7°C	80.6°F 27.0°C	84.2°F 29.0°C	73.4°F 23.0°C	77.0°F 25.0°C	80.0°F 26.7°C	80.6°F 27.0°C	84.2°F 29.0°C	73.4°F 23.0°C	77.0°F 25.0°C	80.0°F 26.7°C	80.6°F 27.0°C	84.2°F 29.0°C	73.4°F 23.0°C	77.0°F 25.0°C	80.0°F 26.7°C	80.6°F 27.0°C	84.2°F 29.0°C
859	-22°F(-30.0°C)	TC	22938	22933	22929	22928	23399	23971	23964	23958	23956	23949	24703	24695	24686	24685	24673	26076	26069	26059	26058	26041
		S/T	0.74	0.83	0.91	0.93	0.99	0.61	0.70	0.77	0.79	0.88	0.52	0.61	0.68	0.70	0.78	0.38	0.45	0.52	0.54	0.62
		PI	2.63	2.63	2.63	2.63	2.62	2.61	2.61	2.61	2.61	2.61	2.60	2.60	2.60	2.60	2.60	2.60	2.60	2.60	2.60	2.60
	-13°F(-25.0°C)	TC	24850	24844	24839	24839	25349	25968	25961	25954	25953	25944	26761	26753	26744	26742	26730	28249	28242	28230	28230	28211
		S/T	0.75	0.84	0.92	0.93	1.00	0.61	0.70	0.78	0.79	0.88	0.52	0.61	0.69	0.70	0.79	0.38	0.46	0.53	0.54	0.62
		PI	2.73	2.73	2.73	2.73	2.72	2.71	2.71	2.71	2.71	2.71	2.70	2.70	2.70	2.70	2.70	2.70	2.70	2.70	2.70	2.70
	-4°F(-20.0°C)	TC	26761	26755	26750	26749	27298	27966	27958	27950	27949	27940	28820	28811	28801	28799	28786	30422	30414	30402	30401	30381
		S/T	0.75	0.84	0.92	0.94	1.00	0.61	0.71	0.78	0.79	0.88	0.53	0.61	0.69	0.70	0.79	0.39	0.46	0.53	0.54	0.63
		PI	2.83	2.83	2.83	2.83	2.82	2.80	2.80	2.80	2.80	2.81	2.79	2.79	2.79	2.79	2.80	2.80	2.79	2.80	2.80	2.80
	0°F(-17.8°C)	TC	27636	27628	27622	27621	28310	28868	28858	28847	28845	28833	29740	29728	29715	29712	29694	31359	31352	31349	31347	31351
		S/T	0.75	0.85	0.93	0.95	1.00	0.62	0.71	0.79	0.80	0.90	0.53	0.62	0.70	0.71	0.80	0.39	0.46	0.53	0.55	0.63
		PI	2.85	2.85	2.85	2.85	2.84	2.84	2.84	2.84	2.84	2.84	2.84	2.84	2.84	2.84	2.84	2.85	2.85	2.85	2.85	2.85
	5°F(-15.0°C)	TC	28476	28479	28568	28609	29445	29863	29862	29866	29867	29902	30857	30856	30858	30859	30865	32754	32745	32746	32744	32746
		S/T	0.76	0.86	0.94	0.96	1.00	0.62	0.72	0.80	0.81	0.90	0.53	0.62	0.70	0.72	0.81	0.39	0.46	0.54	0.55	0.64
		PI	2.88	2.88	2.88	2.88	2.88	2.88	2.88	2.88	2.88	2.88	2.89	2.89	2.89	2.89	2.89	2.94	2.94	2.94	2.94	2.94
	14°F(-10.0°C)	TC	28695	28688	28683	28682	29496	30160	30151	30143	30141	30132	31208	31198	31187	31185	31170	33200	33190	33177	33176	33154
		S/T	0.75	0.85	0.93	0.95	1.00	0.62	0.71	0.79	0.80	0.89	0.53	0.62	0.69	0.71	0.79	0.39	0.46	0.53	0.54	0.63
		PI	2.82	2.83	2.83	2.83	2.82	2.81	2.81	2.81	2.81	2.81	2.80	2.80	2.80	2.80	2.80	2.80	2.80	2.80	2.80	2.80
	17°F(-8.3°C)	TC	28764	28755	28830	28871	29736	30233	30223	30230	30231	30263	31292	31292	31297	31299	31308	33345	33335	33338	33336	33344
		S/T	0.76	0.86	0.94	0.96	1.00	0.62	0.72	0.80	0.81	0.90	0.53	0.62	0.70	0.71	0.80	0.39	0.46	0.53	0.55	0.63
		PI	2.78	2.78	2.78	2.78	2.78	2.77	2.77	2.77	2.77	2.77	2.77	2.77	2.77	2.77	2.77	2.79	2.79	2.79	2.79	2.79
	23°F(-5.0°C)	TC	29085	29088	29206	29258	30219	30612	30611	30616	30617	30666	31708	31707	31710	31711	31718	33809	33798	33800	33798	33803
		S/T	0.77	0.87	0.95	0.97	1.00	0.62	0.72	0.80	0.82	0.91	0.53	0.63	0.71	0.72	0.81	0.39	0.46	0.54	0.55	0.64
		PI	2.61	2.61	2.61	2.61	2.62	2.62	2.62	2.62	2.62	2.62	2.64	2.64	2.64	2.64	2.64	2.68	2.68	2.68	2.68	2.68
	35°F(1.7°C)	TC	30006	30004	30005	30005	30391	31498	31492	31490	31490	31491	32545	32542	32537	32537	32535	34501	34493	34487	34485	34484
		S/T	0.73	0.81	0.89	0.90	1.00	0.60	0.68	0.76	0.77	0.85	0.52	0.60	0.67	0.68	0.76	0.39	0.47	0.52	0.53	0.60
		PI	2.14	2.14	2.14	2.14	2.17	2.27	2.27	2.27	2.27	2.27	2.36	2.36	2.36	2.36	2.36	2.57	2.57	2.57	2.57	2.57
	41°F(5.0°C)	TC	30158	30230	30230	30239	30737	31725	31719	31717	31717	31718	32774	32772	32766	32766	32764	34732	34724	34717	34715	34713
		S/T	0.74	0.82	0.90	0.91	1.00	0.60	0.69	0.76	0.78	0.86	0.52	0.60	0.67	0.69	0.77	0.39	0.45	0.52	0.53	0.61
		PI	2.17	2.18	2.18	2.18	2.22	2.31	2.31	2.31	2.31	2.31	2.42	2.42	2.42	2.42	2.42	2.63	2.63	2.63	2.63	2.63
	47°F(8.3°C)	TC	30456	30455	30454	30484	31084	31950	31945	31942	31942	31943	33004	33000	32995	32994	32994	34964	34956	34949	34948	34945
		S/T	0.74	0.83	0.91	0.92	1.00	0.61	0.70	0.77	0.78	0.87	0.52	0.61	0.68	0.69	0.78	0.39	0.45	0.52	0.53	0.62
		PI	2.21	2.21	2.21	2.22	2.27	2.37	2.36	2.36	2.36	2.36	2.47	2.47	2.47	2.47	2.47	2.69	2.69	2.69	2.69	2.69
	50°F(10.0°C)	TC	29701	29826	30669	30842	32008	31463	31483	31491	31524	32048	32741	32759	32778	32781	32828	35179	35166	35207	35216	35264
		S/T	0.83	0.95	1.00	1.00	1.00	0.66	0.78	0.87	0.88	1.00	0.55	0.66	0.76	0.77	0.88	0.39	0.48	0.56	0.58	0.68
		PI	2.47	2.47	2.47	2.47	2.47	2.47	2.47	2.47	2.47	2.47	2.47	2.47	2.47	2.47	2.47	2.47	2.47	2.47	2.47	2.47
	59°F(15.0°C)	TC	28972	29179	30211	30391	31599	30786	30800	30846	30875	31639	32096	32112	32128	32130	32208	34616	34601	34635	34642	34679
		S/T	0.85	0.97	1.00	1.00	1.00	0.67	0.79	0.89	0.91	1.00	0.56	0.68	0.77	0.79	0.90	0.39	0.48	0.57	0.59	0.69
		PI	2.46	2.46	2.47	2.47	2.48	2.47	2.47	2.48	2.48	2.48	2.48	2.48	2.48	2.48	2.48	2.50	2.50	2.50	2.50	2.50
	68°F(20.0°C)	TC	28265	28740	29785	29970	31215	30115	30127	30210	30247	31255	31450	31467	31477	31478	31601	34023	34008	34041	34048	34076
		S/T	0.87	1.00	1.00	1.00	1.00	0.69	0.81	0.91	0.93	1.00	0.57	0.69	0.79	0.81	0.93	0.39	0.49	0.58	0.60	0.71
		PI	2.45	2.46	2.47	2.48	2.49	2.48	2.48	2.48	2.48	2.49	2.49	2.49	2.49	2.49	2.49	2.53	2.53	2.52	2.52	2.52
	77°F(25.0°C)	TC	27517	28159	29238	29430	30717	29420	29434	29547	29595	30756	30785	30811	30827	30828	30988	33426	33410	33463	33471	33510
		S/T	0.88	1.00	1.00	1.00	1.00	0.69	0.82	0.93	0.95	1.00	0.57	0.70	0.80	0.82	0.94	0.39	0.49	0.59	0.60	0.72
		PI	2.47	2.48	2.49	2.49	2.50	2.49	2.49	2.49	2.49	2.50	2.50	2.50	2.50	2.50	2.50	2.53	2.53	2.53	2.53	2.53
	82°F(27.8°C)	TC	27040	27774	28868	29062	30365	28935	28951	29090	29148	30406	30311	30343	30359	30361	30552	32973	32979	33020	33029	33072
		S/T	0.88	1.00	1.00	1.00	1.00	0.70	0.83	0.94	0.96	1.00	0.58	0.70	0.81	0.83	0.96	0.39	0.49	0.59	0.61	0.72
		PI	2.58	2.59	2.60	2.60	2.61	2.60	2.60	2.60	2.60	2.61	2.62	2.61	2.61	2.61	2.62	2.64	2.64	2.64	2.64	2.64
	86°F(30.0°C)	TC	26554	27392	28491	28685	29993	28434	28448	28618	28694	30033	29806	29837	29851	29853	30084	32462	32464	32512	32521	32558
		S/T	0.90	1.00	1.00	1.00	1.00	0.71	0.84	0.96	0.98	1.00	0.58	0.71	0.82	0.84	0.97	0.39	0.50	0.60	0.61	0.73
		PI	2.79	2.80	2.82	2.82	2.83	2.82	2.82	2.82	2.82	2.83	2.83	2.83	2.83	2.83	2.83	2.87	2.87	2.87	2.86	2.86
	95°F(35.0°C)	TC	25810	25815	25957	26023	27096	27497	27493	27501	27502	27551	28710	28709	28709	28710	28723	31050	31039	31030	31044	31036
		S/T	0.77	0.87	0.96	0.98	1.00	0.63	0.72	0.80	0.82	0.91	0.53	0.62	0.70	0.72	0.81	0.39	0.46	0.53	0.55	0.63
		PI	3.16	3.16	3.16	3.17	3.23	3.25	3.25	3.25	3.25	3.26	3.33	3.33	3.33	3.33	3.33	3.47	3.47	3.46	3.47	3.46
	104°F(40.0°C)	TC	19975	19978	20184	20370	21172	21278	21277	21283	21284	21360	22219	22218	22219	22221	22230	24024	24015	24008	24015	24014
		S/T	0.79	0.89	0.99	1.00	1.00	0.63	0.74	0.82	0.84	0.94	0.54	0.64	0.72	0.73	0.83	0.39	0.46	0.54	0.55	0.65
		PI	2.60	2.60	2.61	2.62	2.67	2.68	2.68	2.68	2.68	2.68	2.74	2.74	2.74	2.74	2.74	2.85	2.85	2.85	2.85	2.85
	110°F(43.0°C)	TC	16367	16492	17128	17238	17974	17498	17504	17520	17536	17998	18319	18318	18325	18326	18358	19884	19878	19878	19879	19894
		S/T	0.85	0.97	1.00	1.00	1.00	0.67	0.79	0.89	0.91	1.00	0.56	0.68	0.77	0.79	0.90	0.39	0.48	0.57	0.59	0.69
		PI	2.29	2.30	2.33	2.33	2.37	2.35	2.35	2.35	2.35	2.37	2.39	2.38	2.38	2.38	2.39	2.46	2.46	2.46	2.46	2.46
	115°F(46.0°C)	TC	15293	15619	16229	16337	17058	16383	16388	16432	16455	17081	17169	17173	17179	17179	17244	18677	18669	18675	18679	18693
		S/T	0.88	1.00	1.00	1.00	1.00	0.69	0.82	0.92	0.94	1.00	0.57	0.69	0.80	0.82	0.94	0.39	0.49	0.58	0.60	0.71
		PI	2.28	2.29	2.32	2.33	2.36	2.33	2.33	2.33	2.33	2.36	2.36	2.36	2.36	2.36	2.36	2.43	2.43	2.43	2.43	2.43
	122°F(50.0°C)	TC	13890	14673	15322	15437	16209	14830	14867	15341	15457	16227	15622	15625	15650	15667	16243	17133	17138	17153	17154	17151
		S/T	1.00	1.00	1.00	1.00	1.00	0.76	0.92	1.00	1.00	1.00	0.62	0.77	0.89	0.92	1.00	0.40	0.52	0.64	0.66	0.79
		PI	2.29	2.31	2.32	2.33	2.35	2.31	2.31	2.32	2.33	2.35	2.33	2.33	2.33	2.33	2.35	2.38	2.38	2.37	2.37	2.37

Table 5 – 36K Cooling Performance (Continued)

AIRFLOW (CFM)	OUTDOOR DB °F(°C)	ID WB °F(°C)	60.8°F(16.0°C)					64.4°F(18.0°C)					67°F(19.4°C)					71.6°F(22.0°C)				
		ID DB °F °C	73.4°F 23.0°C	77.0°F 25.0°C	80.0°F 26.7°C	80.6°F 27.0°C	84.2°F 29.0°C	73.4°F 23.0°C	77.0°F 25.0°C	80.0°F 26.7°C	80.6°F 27.0°C	84.2°F 29.0°C	73.4°F 23.0°C	77.0°F 25.0°C	80.0°F 26.7°C	80.6°F 27.0°C	84.2°F 29.0°C	73.4°F 23.0°C	77.0°F 25.0°C	80.0°F 26.7°C	80.6°F 27.0°C	84.2°F 29.0°C
1059	-22°F(-30.0°C)	TC	25851	25842	25835	25985	26750	26989	26975	26963	26960	26942	27795	27781	27762	27759	27740	29320	29312	29291	29284	29240
		S/T	0.77	0.87	0.96	0.99	0.99	0.63	0.73	0.81	0.82	0.93	0.53	0.63	0.71	0.73	0.82	0.38	0.46	0.54	0.55	0.64
		PI	2.89	2.90	2.90	2.89	2.88	2.87	2.88	2.88	2.88	2.88	2.87	2.87	2.87	2.87	2.87	2.88	2.88	2.88	2.88	2.88
	-13°F(-25.0°C)	TC	28006	27996	27988	28150	28979	29239	29223	29209	29207	29187	30111	30096	30076	30072	30051	31764	31755	31732	31724	31677
		S/T	0.77	0.88	0.97	1.00	1.00	0.63	0.73	0.81	0.83	0.93	0.54	0.63	0.71	0.73	0.83	0.39	0.46	0.54	0.56	0.65
		PI	3.00	3.00	3.00	3.00	2.99	2.98	2.98	2.98	2.98	2.98	2.97	2.98	2.98	2.98	2.98	2.99	2.99	2.99	2.99	2.99
	-4°F(-20.0°C)	TC	30160	30149	30141	30316	31208	31488	31470	31456	31454	31432	32427	32411	32389	32386	32363	34207	34198	34173	34164	34113
		S/T	0.78	0.88	0.97	1.00	1.00	0.63	0.73	0.82	0.83	0.93	0.54	0.64	0.72	0.73	0.83	0.39	0.47	0.55	0.56	0.65
		PI	3.11	3.11	3.11	3.11	3.09	3.09	3.09	3.09	3.09	3.09	3.08	3.08	3.08	3.08	3.08	3.09	3.09	3.09	3.09	3.09
	0°F(-17.8°C)	TC	31155	31142	31262	31500	32373	32514	32489	32470	32467	32462	33467	33448	33417	33413	33383	35271	35260	35262	35266	35292
		S/T	0.78	0.89	0.99	1.00	1.00	0.64	0.74	0.83	0.84	0.95	0.54	0.64	0.73	0.74	0.84	0.39	0.47	0.55	0.57	0.66
		PI	3.14	3.14	3.14	3.13	3.13	3.13	3.13	3.13	3.13	3.13	3.13	3.13	3.13	3.13	3.13	3.16	3.16	3.16	3.16	3.16
	5°F(-15.0°C)	TC	32071	32100	32533	32682	33682	33597	33604	33607	33608	33773	34696	34693	34703	34703	34708	36769	36758	36759	36762	36782
		S/T	0.79	0.90	1.00	1.00	1.00	0.64	0.75	0.84	0.85	0.96	0.54	0.65	0.73	0.75	0.85	0.39	0.47	0.55	0.57	0.66
		PI	3.16	3.16	3.16	3.16	3.17	3.17	3.17	3.17	3.17	3.17	3.19	3.19	3.19	3.19	3.19	3.25	3.25	3.25	3.25	3.25
	14°F(-10.0°C)	TC	32321	32309	32443	32726	33742	33943	33924	33908	33905	33887	35116	35100	35073	35068	35038	37324	37313	37286	37278	37220
		S/T	0.78	0.89	0.99	1.00	1.00	0.64	0.74	0.82	0.84	0.94	0.54	0.64	0.72	0.74	0.83	0.39	0.47	0.55	0.56	0.65
		PI	3.11	3.11	3.11	3.11	3.10	3.10	3.10	3.10	3.10	3.10	3.09	3.09	3.09	3.09	3.09	3.10	3.10	3.10	3.10	3.10
	17°F(-8.3°C)	TC	32444	32452	32850	33040	34103	34073	34076	34083	34084	34246	35160	35173	35196	35198	35207	37498	37487	37491	37498	37532
		S/T	0.79	0.89	1.00	1.00	1.00	0.64	0.74	0.83	0.85	0.95	0.55	0.65	0.73	0.75	0.85	0.39	0.47	0.55	0.57	0.66
		PI	3.06	3.06	3.06	3.06	3.06	3.06	3.06	3.06	3.06	3.06	3.06	3.06	3.06	3.06	3.06	3.08	3.08	3.08	3.08	3.08
	23°F(-5.0°C)	TC	32756	32801	33335	33498	34593	34437	34446	34450	34451	34655	35651	35650	35661	35662	35668	37949	37938	37939	37944	37971
		S/T	0.80	0.91	1.00	1.00	1.00	0.65	0.75	0.84	0.86	0.97	0.54	0.65	0.74	0.75	0.85	0.39	0.47	0.56	0.57	0.66
		PI	2.87	2.87	2.88	2.88	2.89	2.89	2.89	2.89	2.89	2.89	2.91	2.91	2.91	2.91	2.91	2.96	2.96	2.96	2.96	2.96
	35°F(1.7°C)	TC	33835	33836	33901	33939	34811	35458	35453	35455	35456	35456	36598	36595	36591	36591	36595	38717	38708	38700	38705	38698
		S/T	0.75	0.85	0.93	0.94	1.00	0.62	0.71	0.79	0.80	0.89	0.53	0.62	0.69	0.71	0.80	0.39	0.46	0.53	0.54	0.63
		PI	2.36	2.36	2.37	2.37	2.44	2.50	2.50	2.50	2.50	2.50	2.61	2.61	2.61	2.61	2.61	2.84	2.83	2.83	2.83	2.83
	41°F(5.0°C)	TC	34086	34086	34181	34227	35198	35713	35709	35710	35710	35742	36856	36852	36849	36849	36853	38978	38968	38960	38964	38959
		S/T	0.76	0.86	0.94	0.96	1.00	0.62	0.72	0.80	0.81	0.90	0.53	0.62	0.70	0.71	0.81	0.39	0.46	0.53	0.55	0.64
		PI	2.40	2.40	2.41	2.42	2.50	2.55	2.55	2.55	2.55	2.55	2.67	2.67	2.67	2.67	2.67	2.91	2.90	2.90	2.90	2.90
	47°F(8.3°C)	TC	34334	34334	34466	34526	35588	35968	35963	35964	35964	36018	37113	37109	37106	37106	37109	39243	39233	39230	39229	39223
		S/T	0.77	0.87	0.95	0.97	1.00	0.63	0.72	0.81	0.82	0.91	0.53	0.63	0.71	0.72	0.82	0.39	0.46	0.54	0.55	0.64
		PI	2.44	2.44	2.45	2.46	2.56	2.60	2.60	2.60	2.60	2.61	2.72	2.72	2.72	2.72	2.72	2.97	2.97	2.97	2.97	2.97
	50°F(10.0°C)	TC	33435	33981	35117	35318	36671	35400	35421	35535	35581	36714	36794	36841	36862	36865	37031	39444	39463	39559	39570	39623
		S/T	0.87	1.00	1.00	1.00	1.00	0.69	0.81	0.92	0.94	1.00	0.57	0.69	0.80	0.81	0.93	0.39	0.49	0.58	0.60	0.71
		PI	2.73	2.73	2.73	2.73	2.73	2.73	2.73	2.73	2.73	2.73	2.73	2.73	2.73	2.73	2.73	2.72	2.72	2.72	2.72	2.72
	59°F(15.0°C)	TC	32647	33433	34609	34818	36219	34639	34654	34826	34893	36260	36077	36116	36131	36132	36371	38832	38843	38919	38928	38966
		S/T	0.88	1.00	1.00	1.00	1.00	0.70	0.83	0.94	0.97	1.00	0.58	0.71	0.81	0.83	0.96	0.39	0.50	0.59	0.61	0.73
		PI	2.72	2.72	2.73	2.73	2.74	2.73	2.73	2.73	2.73	2.74	2.74	2.74	2.74	2.74	2.74	2.76	2.76	2.76	2.76	2.75
	68°F(20.0°C)	TC	31892	32921	34132	34347	35792	33885	33896	34161	34384	35832	35360	35389	35399	35400	35803	38181	38194	38255	38262	38289
		S/T	0.91	1.00	1.00	1.00	1.00	0.72	0.85	0.97	1.00	1.00	0.59	0.72	0.84	0.86	0.99	0.40	0.50	0.61	0.62	0.75
		PI	2.71	2.72	2.74	2.74	2.75	2.73	2.73	2.74	2.74	2.75	2.75	2.75	2.75	2.75	2.75	2.79	2.79	2.79	2.79	2.78
	77°F(25.0°C)	TC	31080	32270	33522	33744	35236	33101	33116	33497	33784	35277	34612	34651	34667	34708	35309	37486	37520	37604	37613	37654
		S/T	0.92	1.00	1.00	1.00	1.00	0.72	0.87	0.99	1.00	1.00	0.59	0.73	0.85	0.86	1.00	0.40	0.51	0.61	0.63	0.76
		PI	2.73	2.74	2.75	2.75	2.77	2.75	2.75	2.75	2.75	2.77	2.76	2.76	2.76	2.76	2.77	2.79	2.79	2.79	2.79	2.79
	82°F(27.8°C)	TC	30540	31835	33104	33330	34845	32556	32609	33144	33370	34884	34079	34125	34142	34195	34916	36965	37012	37105	37115	37159
		S/T	0.94	1.00	1.00	1.00	1.00	0.73	0.87	1.00	1.00	1.00	0.60	0.74	0.86	0.87	1.00	0.40	0.51	0.62	0.63	0.76
		PI	2.85	2.86	2.87	2.88	2.89	2.87	2.87	2.87	2.88	2.89	2.88	2.88	2.88	2.88	2.89	2.92	2.91	2.91	2.91	2.91
	86°F(30.0°C)	TC	29975	31363	32635	32860	34392	31954	32020	32674	32900	34419	33478	33518	33571	33601	34451	36356	36409	36494	36503	36541
		S/T	0.95	1.00	1.00	1.00	1.00	0.74	0.88	1.00	1.00	1.00	0.60	0.75	0.86	0.88	1.00	0.40	0.51	0.62	0.64	0.77
		PI	3.08	3.10	3.11	3.12	3.14	3.11	3.11	3.11	3.12	3.13	3.13	3.13	3.13	3.13	3.14	3.17	3.16	3.16	3.16	3.16
	95°F(35.0°C)	TC	29071	29123	29748	29923	31096	30930	30938	30948	30950	31160	32266	32269	32286	32288	32303	34832	34819	34823	34821	34847
		S/T	0.80	0.91	1.00	1.00	1.00	0.65	0.75	0.84	0.86	0.96	0.54	0.65	0.73	0.75	0.85	0.39	0.47	0.55	0.56	0.66
		PI	3.48	3.48	3.52	3.53	3.60	3.59	3.59	3.59	3.59	3.60	3.67	3.67	3.67	3.67	3.67	3.82	3.82	3.82	3.82	3.82
	104°F(40.0°C)	TC	22496	22577	23227	23364	24290	23936	23944	23950	23951	24267	24970	24974	24988	24989	24997	26955	26944	26950	26945	26971
		S/T	0.82	0.94	1.00	1.00	1.00	0.66	0.77	0.86	0.88	1.00	0.55	0.66	0.75	0.77	0.87	0.39	0.47	0.56	0.58	0.67
		PI	2.87	2.87	2.91	2.92	2.98	2.96	2.96	2.96	2.96	2.98	3.02	3.02	3.02	3.02	3.02	3.14	3.14	3.14	3.14	3.14
	110°F(43.0°C)	TC	18432	18931	19649	19776	20625	19690	19697	19783	19821	20648	20590	20602	20609	20609	20729	22319	22309	22331	22335	22352
		S/T	0.89	1.00	1.00	1.00	1.00	0.70	0.83	0.94	0.96	1.00	0.58	0.70	0.81	0.83	0.96	0.39	0.49	0.59	0.61	0.73
		PI	2.53	2.55	2.58	2.59	2.63	2.59	2.59	2.59	2.59	2.63	2.63	2.63	2.63	2.63	2.64	2.72	2.72	2.72	2.72	2.71
	115°F(46.0°C)	TC	17243	17893	18596	18721	19555	18418	18422	18583	18745	19578	19297	19314	19319	19320	19596	20942	20932	20965	20968	20979
		S/T	0.92	1.00	1.00	1.00	1.00	0.72	0.86	0.98	1.00	1.00	0.59	0.73	0.84	0.86	1.00	0.40	0.50	0.61	0.63	0.75
		PI	2.51	2.54	2.57	2.57	2.61	2.56	2.56	2.57	2.57	2.61	2.61	2.61	2.61	2.61	2.61	2.67	2.67	2.67	2.67	2.67
	122°F(50.0°C)	TC	15891	16761	17507	17640	18526	16627	16757	17527	17660	18545	17510	17509	17600	17653	18561	19163	19201	19211	19210	19200
		S/T	1.00	1.00	1.00	1.00	1.00	0.80	0.98	1.00	1.00	1.00	0.64	0.81	0.95	0.98	1.00	0.41	0.54	0.67	0.69	0.84
		PI	2.53	2.55	2.57	2.57	2.60	2.55	2.55	2.57	2.57	2.60	2.57	2.57	2.57	2.57	2.60	2.63	2.62	2.62	2.62	2.61

Table 5 – 36K Cooling Performance (Continued)

AIRFLOW (CFM)	OUTDOOR DB °F(°C)	ID WB °F(°C)	60.8°F(16.0°C)					64.4°F(18.0°C)					67°F(19.4°C)					71.6°F(22.0°C)				
		ID DB °F °C	73.4°F 23.0°C	77.0°F 25.0°C	80.0°F 26.7°C	80.6°F 27.0°C	84.2°F 29.0°C	73.4°F 23.0°C	77.0°F 25.0°C	80.0°F 26.7°C	80.6°F 27.0°C	84.2°F 29.0°C	73.4°F 23.0°C	77.0°F 25.0°C	80.0°F 26.7°C	80.6°F 27.0°C	84.2°F 29.0°C	73.4°F 23.0°C	77.0°F 25.0°C	80.0°F 26.7°C	80.6°F 27.0°C	84.2°F 29.0°C
1226	-22°F(-30.0°C)	TC	29119	29106	29521	29644	30459	30382	30357	30337	30335	30310	31290	31251	31221	31217	31187	33005	32996	32928	32916	32846
		S/T	0.80	0.91	0.99	0.99	0.99	0.64	0.75	0.84	0.86	0.97	0.55	0.65	0.74	0.75	0.86	0.39	0.47	0.55	0.57	0.67
		PI	3.22	3.22	3.21	3.21	3.20	3.20	3.20	3.20	3.20	3.20	3.19	3.20	3.20	3.20	3.20	3.21	3.21	3.22	3.22	3.22
	-13°F(-25.0°C)	TC	31546	31531	31981	32114	32998	32914	32886	32866	32863	32835	33898	33855	33823	33818	33786	35755	35746	35672	35659	35584
		S/T	0.80	0.91	1.00	1.00	1.00	0.65	0.75	0.85	0.86	0.97	0.55	0.65	0.74	0.76	0.86	0.39	0.47	0.56	0.57	0.67
		PI	3.33	3.34	3.33	3.33	3.32	3.32	3.32	3.32	3.32	3.32	3.31	3.31	3.32	3.32	3.32	3.33	3.33	3.33	3.33	3.34
	-4°F(-20.0°C)	TC	33972	33957	34441	34584	35536	35445	35416	35394	35390	35361	36505	36459	36425	36420	36385	38506	38495	38416	38402	38321
		S/T	0.80	0.92	1.00	1.00	1.00	0.65	0.76	0.85	0.87	0.98	0.55	0.65	0.74	0.76	0.86	0.39	0.48	0.56	0.57	0.67
		PI	3.45	3.46	3.45	3.45	3.44	3.43	3.44	3.44	3.44	3.44	3.43	3.43	3.43	3.43	3.43	3.45	3.45	3.45	3.45	3.45
	0°F(-17.8°C)	TC	35100	35079	35730	35879	36865	36605	36565	36537	36532	36900	37681	37628	37581	37575	37558	39708	39698	39695	39701	39726
		S/T	0.81	0.93	1.00	1.00	1.00	0.66	0.77	0.86	0.88	1.00	0.55	0.66	0.75	0.77	0.87	0.39	0.48	0.57	0.58	0.68
		PI	3.48	3.49	3.48	3.48	3.48	3.48	3.48	3.48	3.48	3.48	3.48	3.49	3.49	3.49	3.49	3.52	3.52	3.52	3.52	3.53
	5°F(-15.0°C)	TC	36106	36231	37059	37230	38377	37800	37809	37812	37851	38415	39008	39018	39026	39027	39079	41297	41284	41306	41310	41328
		S/T	0.82	0.94	1.00	1.00	1.00	0.66	0.78	0.87	0.88	1.00	0.56	0.67	0.76	0.78	0.88	0.39	0.48	0.57	0.59	0.69
		PI	3.51	3.51	3.52	3.52	3.54	3.53	3.53	3.53	3.53	3.54	3.55	3.55	3.55	3.55	3.55	3.63	3.63	3.63	3.63	3.63
	14°F(-10.0°C)	TC	36415	36397	37139	37314	38471	38223	38189	38163	38159	38516	39532	39483	39443	39436	39397	42035	42022	41942	41927	41838
		S/T	0.81	0.93	1.00	1.00	1.00	0.65	0.76	0.86	0.87	1.00	0.55	0.66	0.75	0.76	0.87	0.39	0.48	0.56	0.57	0.67
		PI	3.46	3.46	3.45	3.45	3.45	3.44	3.45	3.45	3.45	3.45	3.44	3.44	3.44	3.44	3.44	3.46	3.46	3.46	3.46	3.46
	17°F(-8.3°C)	TC	36432	36551	37395	37578	38798	38245	38261	38268	38300	38840	39551	39565	39581	39583	39632	42063	42052	42045	42053	42088
		S/T	0.82	0.93	1.00	1.00	1.00	0.66	0.77	0.87	0.88	1.00	0.55	0.66	0.76	0.77	0.87	0.39	0.48	0.57	0.58	0.68
		PI	3.40	3.40	3.40	3.40	3.40	3.40	3.40	3.40	3.40	3.40	3.41	3.41	3.41	3.41	3.41	3.43	3.43	3.43	3.43	3.44
	23°F(-5.0°C)	TC	36876	37035	37993	38181	39439	38744	38755	38760	38810	39481	40080	40094	40104	40105	40170	42617	42604	42634	42640	42665
		S/T	0.83	0.95	1.00	1.00	1.00	0.66	0.78	0.88	0.89	1.00	0.56	0.67	0.76	0.78	0.89	0.39	0.48	0.57	0.59	0.69
		PI	3.19	3.20	3.21	3.21	3.23	3.22	3.22	3.22	3.22	3.23	3.24	3.24	3.24	3.24	3.24	3.30	3.30	3.30	3.30	3.30
	35°F(1.7°C)	TC	38120	38121	38345	38452	39693	39902	39900	39904	39904	40010	41151	41148	41150	41151	41155	43468	43458	43456	43454	43457
		S/T	0.78	0.88	0.97	0.99	1.00	0.63	0.73	0.82	0.83	0.93	0.54	0.63	0.72	0.73	0.83	0.39	0.46	0.54	0.56	0.65
		PI	2.63	2.63	2.64	2.65	2.76	2.78	2.78	2.78	2.78	2.79	2.90	2.90	2.90	2.90	2.91	3.16	3.16	3.16	3.16	3.16
	41°F(5.0°C)	TC	38401	38401	38707	38976	40128	40187	40186	40188	40188	40329	41440	41437	41440	41441	41443	43765	43755	43752	43750	43755
		S/T	0.78	0.89	0.98	1.00	1.00	0.64	0.74	0.83	0.84	0.94	0.54	0.64	0.72	0.74	0.84	0.39	0.47	0.55	0.56	0.66
		PI	2.67	2.67	2.70	2.72	2.83	2.84	2.84	2.84	2.84	2.85	2.97	2.97	2.97	2.97	2.97	3.23	3.23	3.23	3.23	3.23
	47°F(8.3°C)	TC	38680	38706	39225	39400	40566	40473	40472	40473	40472	40660	41730	41727	41729	41729	41729	44067	44055	44052	44050	44054
		S/T	0.79	0.90	1.00	1.00	1.00	0.64	0.75	0.84	0.85	0.96	0.54	0.65	0.73	0.75	0.85	0.39	0.47	0.55	0.57	0.67
		PI	2.72	2.72	2.77	2.79	2.91	2.90	2.90	2.90	2.90	2.92	3.03	3.03	3.03	3.03	3.03	3.31	3.31	3.31	3.31	3.31
	50°F(10.0°C)	TC	37698	38736	40043	40275	41836	39826	39848	40123	40250	41876	41379	41433	41455	41458	41856	44232	44348	44463	44476	44532
		S/T	0.90	1.00	1.00	1.00	1.00	0.71	0.85	0.96	0.99	1.00	0.59	0.72	0.83	0.85	0.99	0.40	0.50	0.60	0.62	0.74
		PI	3.04	3.04	3.04	3.04	3.04	3.04	3.04	3.04	3.04	3.04	3.04	3.04	3.04	3.04	3.04	3.03	3.03	3.03	3.03	3.03
	59°F(15.0°C)	TC	36832	38124	39477	39717	41333	38970	39023	39466	39760	41374	40577	40618	40632	40692	41408	43572	43659	43746	43756	43793
		S/T	0.92	1.00	1.00	1.00	1.00	0.73	0.86	1.00	1.00	1.00	0.60	0.73	0.85	0.86	1.00	0.40	0.51	0.61	0.63	0.76
		PI	3.03	3.04	3.04	3.05	3.05	3.04	3.04	3.04	3.05	3.05	3.05	3.05	3.05	3.05	3.05	3.07	3.07	3.07	3.07	3.07
	68°F(20.0°C)	TC	35954	37489	38879	39126	40786	38063	38149	38921	39168	40827	39708	39738	39810	39845	40860	42786	42865	42933	42939	42962
		S/T	0.95	1.00	1.00	1.00	1.00	0.74	0.89	1.00	1.00	1.00	0.61	0.75	0.87	0.89	1.00	0.40	0.51	0.63	0.65	0.78
		PI	3.02	3.04	3.05	3.06	3.07	3.04	3.04	3.05	3.06	3.07	3.06	3.06	3.06	3.06	3.07	3.11	3.11	3.10	3.10	3.10
	77°F(25.0°C)	TC	35053	36741	38179	38433	40151	37161	37279	38221	38476	40191	38844	38888	38987	39031	40225	41953	42080	42178	42188	42227
		S/T	0.97	1.00	1.00	1.00	1.00	0.75	0.90	1.00	1.00	1.00	0.61	0.76	0.88	0.90	1.00	0.40	0.52	0.63	0.65	0.79
		PI	3.04	3.06	3.07	3.07	3.09	3.06	3.06	3.07	3.07	3.09	3.08	3.08	3.08	3.08	3.09	3.11	3.11	3.11	3.11	3.11
	82°F(27.8°C)	TC	34472	36231	37693	37948	39686	36529	36670	37726	37991	39728	38228	38277	38396	38443	39763	41333	41488	41596	41607	41653
		S/T	0.99	1.00	1.00	1.00	1.00	0.76	0.91	1.00	1.00	1.00	0.62	0.77	0.89	0.92	1.00	0.40	0.52	0.64	0.66	0.80
		PI	3.17	3.19	3.21	3.21	3.22	3.20	3.20	3.20	3.21	3.22	3.21	3.21	3.21	3.21	3.22	3.25	3.25	3.24	3.24	3.24
	86°F(30.0°C)	TC	34016	35714	37174	37434	39177	35872	36037	37216	37476	39218	37572	37615	37753	37808	39251	40676	40833	40930	40940	40978
		S/T	1.00	1.00	1.00	1.00	1.00	0.77	0.93	1.00	1.00	1.00	0.62	0.78	0.91	0.93	1.00	0.40	0.52	0.64	0.66	0.81
		PI	3.44	3.46	3.47	3.48	3.50	3.46	3.46	3.47	3.48	3.50	3.48	3.48	3.48	3.48	3.50	3.53	3.52	3.52	3.52	3.52
	95°F(35.0°C)	TC	32730	32907	33971	34172	35523	34786	34806	34817	34858	35567	36278	36286	36308	36312	36372	39092	39077	39085	39096	39148
		S/T	0.83	0.95	1.00	1.00	1.00	0.66	0.78	0.88	0.89	1.00	0.56	0.67	0.76	0.78	0.88	0.39	0.48	0.57	0.58	0.68
		PI	3.88	3.88	3.95	3.96	4.04	4.00	4.00	4.00	4.00	4.04	4.09	4.09	4.09	4.09	4.09	4.25	4.25	4.25	4.25	4.26
	104°F(40.0°C)	TC	25330	25562	26524	26684	27748	26926	26941	26989	27018	27783	28075	28086	28101	28102	28182	30260	30249	30263	30273	30305
		S/T	0.85	0.98	1.00	1.00	1.00	0.68	0.80	0.90	0.92	1.00	0.56	0.68	0.78	0.80	0.91	0.39	0.48	0.58	0.59	0.70
		PI	3.19	3.21	3.27	3.28	3.34	3.29	3.29	3.30	3.30	3.34	3.36	3.36	3.36	3.36	3.37	3.50	3.50	3.50	3.50	3.50
	110°F(43.0°C)	TC	20810	21610	22434	22579	23557	22155	22162	22410	22606	23582	23153	23171	23177	23194	23603	25060	25061	25100	25104	25119
		S/T	0.92	1.00	1.00	1.00	1.00	0.72	0.87	0.99	1.00	1.00	0.60	0.73	0.85	0.86	1.00	0.40	0.51	0.61	0.63	0.76
		PI	2.82	2.86	2.89	2.90	2.95	2.88	2.88	2.89	2.90	2.95	2.93	2.93	2.93	2.93	2.95	3.03	3.03	3.03	3.02	3.02
	115°F(46.0°C)	TC	19482	20420	21227	21385	22327	20718	20759	21251	21413	22350	21684	21697	21727	21748	22369	23511	23529	23562	23565	23572
		S/T	0.96	1.00	1.00	1.00	1.00	0.75	0.89	1.00	1.00	1.00	0.61	0.75	0.87	0.90	1.00	0.40	0.52	0.63	0.65	0.78
		PI	2.81	2.85	2.88	2.89	2.93	2.86	2.86	2.88	2.90	2.93	2.90	2.90	2.90	2.90	2.93	2.99	2.99	2.98	2.98	2.98
	122°F(50.0°C)	TC	17922	18910	19757	19904	20910	18493	18930	19779	19927	20929	19475	19470	19793	19942	20942	21265	21348	21353	21351	21379
		S/T	1.00	1.00	1.00	1.00	1.00	0.84	1.00	1.00	1.00	1.00	0.67	0.85	1.00	1.00	1.00	0.41	0.55	0.69	0.72	0.88
		PI	2.82	2.84	2.86	2.87	2.89	2.83	2.84	2.87	2.87	2.89	2.86	2.86	2.87	2.87	2.89	2.93	2.92	2.91	2.91	2.91

Manufacturer reserves the right to change, at any time, specifications and designs without notice and without obligations.

Table 6 – 48K Cooling Performance

AIRFLOW (CFM)	OUTDOOR DB °F(°C)	ID WB °F(°C)	60.8°F(16.0°C)					64.4°F(18.0°C)					67°F(19.4°C)					71.6°F(22.0°C)				
		ID DB °F °C	73.4°F 23.0°C	77.0°F 25.0°C	80.0°F 26.7°C	80.6°F 27.0°C	84.2°F 29.0°C	73.4°F 23.0°C	77.0°F 25.0°C	80.0°F 26.7°C	80.6°F 27.0°C	84.2°F 29.0°C	73.4°F 23.0°C	77.0°F 25.0°C	80.0°F 26.7°C	80.6°F 27.0°C	84.2°F 29.0°C	73.4°F 23.0°C	77.0°F 25.0°C	80.0°F 26.7°C	80.6°F 27.0°C	84.2°F 29.0°C
825	-22°F(-30.0°C)	TC	30521	30516	30512	30512	30506	31941	31933	31928	31927	31921	32948	32940	32932	32931	32924	34838	34829	34820	30521	30516
		S/T	0.71	0.80	0.87	0.88	0.96	0.59	0.67	0.74	0.75	0.83	0.51	0.59	0.66	0.67	0.74	0.38	0.46	0.51	0.71	0.80
		PI	3.82	3.83	3.83	3.83	3.83	3.78	3.78	3.78	3.78	3.78	3.76	3.76	3.76	3.76	3.76	3.75	3.75	3.75	3.82	3.83
	-13°F(-25.0°C)	TC	33064	33059	33055	33054	33048	34603	34594	34588	34587	34581	35694	35685	35677	35675	35667	37741	37731	37722	33064	33059
		S/T	0.72	0.80	0.87	0.88	0.97	0.59	0.67	0.74	0.76	0.83	0.51	0.59	0.66	0.67	0.75	0.38	0.46	0.51	0.72	0.80
		PI	3.97	3.97	3.97	3.97	3.97	3.92	3.92	3.92	3.92	3.92	3.90	3.90	3.90	3.90	3.90	3.89	3.89	3.89	3.97	3.97
	-4°F(-20.0°C)	TC	35607	35602	35598	35597	35590	37265	37255	37249	37248	37241	38440	38430	38421	38420	38411	40644	40633	40624	35607	35602
		S/T	0.72	0.80	0.88	0.89	0.97	0.60	0.68	0.75	0.76	0.84	0.52	0.59	0.66	0.67	0.75	0.39	0.47	0.51	0.72	0.80
		PI	4.11	4.11	4.11	4.11	4.11	4.06	4.06	4.06	4.06	4.06	4.04	4.04	4.04	4.04	4.04	4.03	4.03	4.03	4.11	4.11
	0°F(-17.8°C)	TC	36766	36759	36753	36752	36741	38460	38453	38444	38443	38433	39661	39650	39641	39639	39627	41898	41887	41879	36766	36759
		S/T	0.72	0.81	0.88	0.90	0.98	0.60	0.68	0.75	0.76	0.85	0.52	0.60	0.67	0.68	0.76	0.39	0.47	0.52	0.72	0.81
		PI	4.14	4.14	4.14	4.14	4.14	4.11	4.11	4.11	4.11	4.11	4.10	4.10	4.10	4.10	4.10	4.11	4.11	4.11	4.14	4.14
	5°F(-15.0°C)	TC	37919	37919	37919	37919	38486	39813	39806	39804	39805	39808	41174	41171	41165	41164	41168	43784	43772	43762	37919	37919
		S/T	0.73	0.82	0.90	0.91	1.00	0.60	0.69	0.76	0.77	0.86	0.52	0.60	0.67	0.68	0.77	0.39	0.47	0.52	0.73	0.82
		PI	4.18	4.18	4.19	4.19	4.18	4.17	4.17	4.17	4.17	4.17	4.18	4.18	4.18	4.18	4.18	4.23	4.23	4.23	4.18	4.18
	14°F(-10.0°C)	TC	38766	38762	38756	38756	38944	40802	40791	40785	40784	40776	42256	42246	42235	42234	42224	45017	45004	44993	38766	38762
		S/T	0.73	0.81	0.89	0.90	0.99	0.60	0.68	0.75	0.76	0.85	0.52	0.60	0.66	0.68	0.76	0.39	0.47	0.51	0.73	0.81
		PI	4.09	4.09	4.09	4.09	4.09	4.06	4.06	4.06	4.06	4.06	4.04	4.05	4.05	4.05	4.05	4.04	4.04	4.04	4.09	4.09
	17°F(-8.3°C)	TC	39078	39070	39064	39063	39626	41127	41117	41109	41108	41108	42599	42598	42591	42590	42597	45476	45463	45452	39078	39070
		S/T	0.73	0.82	0.89	0.91	1.00	0.60	0.69	0.76	0.77	0.85	0.52	0.60	0.67	0.68	0.76	0.39	0.47	0.52	0.73	0.82
		PI	4.02	4.03	4.03	4.03	4.02	4.01	4.01	4.01	4.01	4.01	4.00	4.00	4.00	4.00	4.00	4.01	4.01	4.01	4.02	4.03
	23°F(-5.0°C)	TC	39342	39344	39344	39369	40088	41460	41452	41451	41452	41456	42983	42980	42974	42973	42978	45913	45900	45889	39342	39344
		S/T	0.74	0.83	0.90	0.91	1.00	0.61	0.69	0.77	0.78	0.86	0.52	0.60	0.67	0.69	0.77	0.39	0.47	0.52	0.74	0.83
		PI	3.85	3.85	3.85	3.85	3.85	3.86	3.86	3.86	3.86	3.86	3.88	3.88	3.88	3.88	3.88	3.93	3.93	3.93	3.85	3.85
	35°F(1.7°C)	TC	40196	40192	40190	40189	40245	42278	42274	42269	42268	42264	43750	43741	43739	43738	43731	46505	46495	46486	40196	40192
		S/T	0.70	0.78	0.85	0.86	0.93	0.59	0.66	0.72	0.74	0.81	0.51	0.58	0.64	0.65	0.73	0.39	0.46	0.50	0.70	0.78
		PI	3.30	3.30	3.30	3.30	3.31	3.49	3.48	3.48	3.48	3.48	3.63	3.63	3.63	3.63	3.63	3.94	3.94	3.94	3.30	3.30
	41°F(5.0°C)	TC	40015	40010	40008	40007	40101	42071	42067	42061	42060	42057	43524	43516	43512	43512	43504	46247	46237	46228	40015	40010
		S/T	0.71	0.79	0.86	0.87	0.95	0.59	0.67	0.73	0.74	0.82	0.51	0.59	0.65	0.66	0.73	0.39	0.46	0.51	0.71	0.79
		PI	3.65	3.65	3.65	3.65	3.66	3.88	3.88	3.88	3.88	3.88	4.05	4.05	4.05	4.05	4.05	4.41	4.41	4.41	3.65	3.65
	47°F(8.3°C)	TC	39826	39821	39819	39819	39957	41859	41854	41848	41848	41845	43298	43288	43285	43284	43278	45987	45976	45967	39826	39821
		S/T	0.71	0.80	0.87	0.88	0.96	0.59	0.67	0.74	0.75	0.83	0.51	0.59	0.65	0.66	0.74	0.39	0.46	0.51	0.71	0.80
		PI	4.01	4.01	4.01	4.01	4.02	4.27	4.27	4.27	4.27	4.27	4.47	4.47	4.47	4.47	4.47	4.88	4.88	4.88	4.01	4.01
	50°F(10.0°C)	TC	39533	39539	39903	40227	41720	41924	41933	41945	41947	42101	43659	43663	43682	43686	43703	47021	47004	47011	39533	39539
		S/T	0.79	0.89	0.99	1.00	1.00	0.64	0.74	0.82	0.84	0.94	0.54	0.64	0.72	0.73	0.83	0.39	0.46	0.54	0.79	0.89
		PI	4.47	4.47	4.47	4.47	4.48	4.48	4.48	4.48	4.48	4.48	4.47	4.47	4.47	4.47	4.47	4.47	4.47	4.47	4.47	4.47
	59°F(15.0°C)	TC	40415	40477	41273	41515	43138	42985	42994	43002	43004	43267	44866	44855	44873	44876	44889	48473	48453	48457	40415	40477
		S/T	0.80	0.91	1.00	1.00	1.00	0.65	0.75	0.84	0.86	0.96	0.54	0.65	0.73	0.75	0.85	0.39	0.47	0.55	0.80	0.91
		PI	4.46	4.46	4.47	4.47	4.48	4.48	4.48	4.48	4.48	4.48	4.50	4.50	4.50	4.50	4.50	4.52	4.52	4.52	4.46	4.46
	68°F(20.0°C)	TC	41311	41446	42617	42878	44631	44055	44063	44068	44069	44599	46056	46047	46064	46066	46075	49907	49886	49887	41311	41446
		S/T	0.82	0.94	1.00	1.00	1.00	0.66	0.77	0.86	0.88	1.00	0.55	0.66	0.75	0.77	0.87	0.39	0.47	0.56	0.82	0.94
		PI	4.45	4.45	4.47	4.47	4.50	4.49	4.49	4.49	4.49	4.50	4.52	4.52	4.52	4.52	4.52	4.58	4.58	4.58	4.45	4.45
	77°F(25.0°C)	TC	42130	42338	43791	44077	45974	45077	45094	45103	45146	46041	47233	47229	47255	47258	47315	51381	51357	51363	42130	42338
		S/T	0.83	0.96	1.00	1.00	1.00	0.66	0.78	0.88	0.89	1.00	0.55	0.67	0.76	0.78	0.88	0.39	0.48	0.56	0.83	0.96
		PI	4.48	4.48	4.50	4.50	4.53	4.52	4.52	4.52	4.52	4.53	4.54	4.54	4.54	4.54	4.54	4.59	4.59	4.59	4.48	4.48
	82°F(27.8°C)	TC	41739	42008	43619	43908	45848	44734	44756	44794	44833	45915	46927	46931	46957	46961	47041	51150	51126	51135	41739	42008
		S/T	0.84	0.97	1.00	1.00	1.00	0.67	0.79	0.88	0.90	1.00	0.56	0.67	0.77	0.78	0.89	0.39	0.48	0.57	0.84	0.97
		PI	4.55	4.56	4.58	4.58	4.60	4.59	4.59	4.59	4.59	4.60	4.62	4.62	4.61	4.61	4.61	4.66	4.66	4.66	4.55	4.56
	86°F(30.0°C)	TC	40374	40726	42424	42710	44631	43325	43345	43404	43447	44695	45480	45486	45510	45513	45616	49632	49608	49617	40374	40726
		S/T	0.85	0.98	1.00	1.00	1.00	0.67	0.80	0.89	0.91	1.00	0.56	0.68	0.77	0.79	0.90	0.39	0.48	0.57	0.85	0.98
		PI	4.67	4.68	4.70	4.71	4.73	4.72	4.72	4.72	4.72	4.73	4.75	4.75	4.74	4.75	4.75	4.80	4.80	4.80	4.67	4.68
	95°F(35.0°C)	TC	37898	37897	37900	37943	38914	40435	40425	40423	40423	40431	42265	42261	42252	42252	42253	45802	45786	45773	37898	37897
		S/T	0.74	0.83	0.91	0.92	1.00	0.61	0.69	0.77	0.78	0.87	0.52	0.60	0.67	0.69	0.77	0.39	0.47	0.52	0.74	0.83
		PI	4.78	4.78	4.78	4.79	4.84	4.93	4.93	4.93	4.93	4.93	5.04	5.04	5.04	5.04	5.04	5.25	5.25	5.25	4.78	4.78
	104°F(40.0°C)	TC	33961	33962	34023	34069	35206	36230	36221	36221	36221	36228	37868	37864	37856	37856	37861	41028	41014	41003	33961	33962
		S/T	0.75	0.85	0.93	0.95	1.00	0.61	0.71	0.78	0.80	0.89	0.52	0.61	0.69	0.70	0.79	0.39	0.45	0.52	0.75	0.85
		PI	4.36	4.36	4.36	4.37	4.43	4.49	4.49	4.49	4.49	4.49	4.59	4.59	4.59	4.59	4.59	4.78	4.78	4.78	4.36	4.36
	110°F(43.0°C)	TC	31396	31441	32148	32355	33718	33619	33614	33621	33621	33814	35219	35215	35218	35220	35229	38307	38291	38290	31396	31441
		S/T	0.80	0.91	1.00	1.00	1.00	0.64	0.75	0.84	0.86	0.96	0.54	0.65	0.73	0.75	0.85	0.39	0.47	0.55	0.80	0.91
		PI	4.15	4.16	4.18	4.19	4.25	4.25	4.25	4.25	4.25	4.26	4.32	4.32	4.32	4.32	4.32	4.46	4.46	4.46	4.15	4.16
	115°F(46.0°C)	TC	26671	26773	27688	27869	29089	28608	28611	28615	28616	29132	30007	30005	30013	30015	30017	32703	32689	32687	26671	26773
		S/T	0.83	0.95	1.00	1.00	1.00	0.66	0.77	0.87	0.89	1.00	0.55	0.66	0.75	0.77	0.88	0.39	0.47	0.56	0.83	0.95
		PI	3.60	3.61	3.64	3.65	3.70	3.68	3.68	3.68	3.68	3.70	3.73	3.73	3.73	3.73	3.73	3.84	3.84	3.84	3.60	3.61
	122°F(50.0°C)	TC	20294	21171	22102	22261	23364	21886	21887	22079	22292	23395	23066	23073	23073	23073	23419	25349	25335	25352	20294	21171
		S/T	0.93	1.00	1.00	1.00	1.00	0.72	0.86	0.99	1.00	1.00	0.59	0.73	0.84	0.86	1.00	0.39	0.50	0.61	0.93	1.00
		PI	2.89	2.91	2.93	2.93	2.96	2.92	2.92	2.93	2.93	2.96	2.95	2.95	2.95	2.95	2.96	3.00	3.00	3.00	2.89	2.91

Table 6 – 48K Cooling Performance (Continued)

AIRFLOW (CFM)	OUTDOOR DB °F(°C)	ID WB °F(°C)	60.8°F(16.0°C)					64.4°F(18.0°C)					67°F(19.4°C)					71.6°F(22.0°C)				
		ID DB °F °C	73.4°F 23.0°C	77.0°F 25.0°C	80.0°F 26.7°C	80.6°F 27.0°C	84.2°F 29.0°C	73.4°F 23.0°C	77.0°F 25.0°C	80.0°F 26.7°C	80.6°F 27.0°C	84.2°F 29.0°C	73.4°F 23.0°C	77.0°F 25.0°C	80.0°F 26.7°C	80.6°F 27.0°C	84.2°F 29.0°C	73.4°F 23.0°C	77.0°F 25.0°C	80.0°F 26.7°C	80.6°F 27.0°C	84.2°F 29.0°C
1038	-22°F(-30.0°C)	TC	33248	33240	33234	33233	33915	34744	34734	34725	34724	34712	35805	35794	35781	35779	35763	37796	37786	37771	33248	33240
		S/T	0.74	0.83	0.91	0.93	0.99	0.61	0.70	0.77	0.79	0.88	0.52	0.61	0.68	0.70	0.78	0.38	0.45	0.52	0.74	0.83
		PI	4.02	4.02	4.02	4.02	4.00	3.98	3.98	3.98	3.98	3.99	3.97	3.97	3.97	3.97	3.97	3.97	3.97	3.97	4.02	4.02
	-13°F(-25.0°C)	TC	36018	36010	36003	36002	36741	37640	37629	37619	37617	37605	38789	38777	38763	38760	38743	40945	40935	40918	36018	36010
		S/T	0.75	0.84	0.92	0.93	1.00	0.61	0.70	0.78	0.79	0.88	0.52	0.61	0.69	0.70	0.79	0.38	0.46	0.53	0.75	0.84
		PI	4.17	4.17	4.17	4.17	4.15	4.13	4.13	4.13	4.13	4.13	4.12	4.12	4.12	4.12	4.12	4.12	4.12	4.12	4.17	4.17
	-4°F(-20.0°C)	TC	38789	38781	38773	38772	39568	40535	40524	40513	40511	40497	41773	41759	41745	41742	41723	44095	44084	44066	38789	38781
		S/T	0.75	0.84	0.92	0.94	1.00	0.61	0.71	0.78	0.79	0.88	0.53	0.61	0.69	0.70	0.79	0.39	0.46	0.53	0.75	0.84
		PI	4.32	4.32	4.32	4.32	4.30	4.28	4.28	4.28	4.28	4.28	4.26	4.26	4.26	4.27	4.27	4.27	4.27	4.27	4.32	4.32
	0°F(-17.8°C)	TC	40057	40046	40037	40035	41033	41843	41828	41813	41810	41792	43106	43089	43070	43066	43040	45453	45443	45438	40057	40046
		S/T	0.75	0.85	0.93	0.95	1.00	0.62	0.71	0.79	0.80	0.90	0.53	0.62	0.70	0.71	0.80	0.39	0.46	0.53	0.75	0.85
		PI	4.35	4.35	4.35	4.35	4.34	4.33	4.33	4.33	4.33	4.33	4.33	4.33	4.33	4.33	4.33	4.35	4.35	4.35	4.35	4.35
	5°F(-15.0°C)	TC	41275	41279	41408	41467	42679	43285	43283	43289	43290	43342	44726	44724	44727	44728	44737	47475	47462	47463	41275	41279
		S/T	0.76	0.86	0.94	0.96	1.00	0.62	0.72	0.80	0.81	0.90	0.53	0.62	0.70	0.72	0.81	0.39	0.46	0.54	0.76	0.86
		PI	4.39	4.39	4.39	4.39	4.39	4.39	4.39	4.39	4.39	4.40	4.41	4.41	4.41	4.41	4.41	4.48	4.48	4.48	4.39	4.39
	14°F(-10.0°C)	TC	42222	42212	42204	42202	43401	44378	44365	44353	44350	44336	45920	45905	45889	45886	45864	48851	48837	48817	42222	42212
		S/T	0.75	0.85	0.93	0.95	1.00	0.62	0.71	0.79	0.80	0.89	0.53	0.62	0.69	0.71	0.79	0.39	0.46	0.53	0.75	0.85
		PI	4.31	4.31	4.31	4.31	4.29	4.28	4.28	4.28	4.28	4.28	4.27	4.27	4.27	4.27	4.27	4.27	4.27	4.27	4.31	4.31
	17°F(-8.3°C)	TC	42531	42518	42629	42689	43968	44704	44688	44699	44700	44747	46269	46269	46276	46279	46293	49305	49290	49295	42531	42518
		S/T	0.76	0.86	0.94	0.96	1.00	0.62	0.72	0.80	0.81	0.90	0.53	0.62	0.70	0.71	0.80	0.39	0.46	0.53	0.76	0.86
		PI	4.24	4.24	4.24	4.24	4.23	4.22	4.23	4.23	4.23	4.23	4.22	4.22	4.22	4.22	4.23	4.24	4.24	4.24	4.24	4.24
	23°F(-5.0°C)	TC	42827	42831	43005	43082	44497	45074	45073	45081	45082	45154	46689	46687	46692	46694	46704	49782	49767	49769	42827	42831
		S/T	0.77	0.87	0.95	0.97	1.00	0.62	0.72	0.80	0.82	0.91	0.53	0.63	0.71	0.72	0.81	0.39	0.46	0.54	0.77	0.87
		PI	4.05	4.05	4.05	4.05	4.07	4.07	4.07	4.07	4.07	4.07	4.09	4.09	4.09	4.09	4.09	4.16	4.16	4.16	4.05	4.05
	35°F(1.7°C)	TC	43827	43824	43824	43824	44388	46006	45997	45993	45993	45996	47535	47531	47523	47523	47521	50392	50380	50371	43827	43824
		S/T	0.73	0.81	0.89	0.90	1.00	0.60	0.68	0.76	0.77	0.85	0.52	0.60	0.67	0.68	0.76	0.39	0.47	0.52	0.73	0.81
		PI	3.48	3.48	3.48	3.48	3.52	3.68	3.67	3.67	3.67	3.67	3.83	3.83	3.83	3.83	3.83	4.16	4.16	4.16	3.48	3.48
	41°F(5.0°C)	TC	43513	43617	43618	43631	44349	45775	45766	45762	45763	45764	47289	47285	47277	47276	47274	50113	50101	50091	43513	43617
		S/T	0.74	0.82	0.90	0.91	1.00	0.60	0.69	0.76	0.78	0.86	0.52	0.60	0.67	0.69	0.77	0.39	0.45	0.52	0.74	0.82
		PI	3.84	3.85	3.85	3.85	3.93	4.09	4.09	4.09	4.09	4.09	4.28	4.28	4.27	4.27	4.27	4.66	4.66	4.66	3.84	3.85
	47°F(8.3°C)	TC	43411	43409	43408	43451	44307	45541	45533	45530	45530	45531	47042	47037	47030	47029	47029	49837	49825	49816	43411	43409
		S/T	0.74	0.83	0.91	0.92	1.00	0.61	0.70	0.77	0.78	0.87	0.52	0.61	0.68	0.69	0.78	0.39	0.45	0.52	0.74	0.83
		PI	4.23	4.23	4.23	4.23	4.34	4.52	4.52	4.52	4.52	4.52	4.72	4.72	4.72	4.72	4.72	5.15	5.15	5.14	4.23	4.23
	50°F(10.0°C)	TC	43005	43187	44407	44659	46347	45557	45586	45598	45645	46405	47407	47434	47462	47465	47534	50938	50919	50978	43005	43187
		S/T	0.83	0.95	1.00	1.00	1.00	0.66	0.78	0.87	0.88	1.00	0.55	0.66	0.76	0.77	0.88	0.39	0.48	0.56	0.83	0.95
		PI	4.72	4.72	4.73	4.73	4.73	4.73	4.73	4.73	4.73	4.73	4.72	4.72	4.72	4.72	4.72	4.72	4.72	4.72	4.72	4.72
	59°F(15.0°C)	TC	43967	44281	45846	46120	47953	46719	46740	46811	46854	48014	48707	48732	48755	48758	48877	52531	52508	52560	43967	44281
		S/T	0.85	0.97	1.00	1.00	1.00	0.67	0.79	0.89	0.91	1.00	0.56	0.68	0.77	0.79	0.90	0.39	0.48	0.57	0.85	0.97
		PI	4.71	4.71	4.73	4.73	4.74	4.73	4.73	4.73	4.73	4.74	4.75	4.75	4.75	4.75	4.75	4.78	4.78	4.78	4.71	4.71
	68°F(20.0°C)	TC	44942	45697	47358	47653	49632	47884	47902	48034	48093	49696	50007	50033	50049	50051	50246	54097	54074	54126	44942	45697
		S/T	0.87	1.00	1.00	1.00	1.00	0.69	0.81	0.91	0.93	1.00	0.57	0.69	0.79	0.81	0.93	0.39	0.49	0.58	0.87	1.00
		PI	4.70	4.71	4.73	4.74	4.76	4.74	4.74	4.74	4.74	4.77	4.77	4.77	4.77	4.77	4.77	4.83	4.83	4.83	4.70	4.71
	77°F(25.0°C)	TC	45831	46900	48697	49017	51160	49000	49023	49212	49291	51225	51273	51318	51343	51346	51611	55672	55645	55733	45831	46900
		S/T	0.88	1.00	1.00	1.00	1.00	0.69	0.82	0.93	0.95	1.00	0.57	0.70	0.80	0.82	0.94	0.39	0.49	0.59	0.88	1.00
		PI	4.73	4.74	4.77	4.77	4.79	4.77	4.77	4.77	4.77	4.79	4.80	4.80	4.80	4.80	4.80	4.85	4.85	4.85	4.73	4.74
	82°F(27.8°C)	TC	45441	46676	48514	48840	51030	48627	48654	48888	48984	51099	50938	50993	51020	51023	51345	55412	55422	55492	45441	46676
		S/T	0.88	1.00	1.00	1.00	1.00	0.70	0.83	0.94	0.96	1.00	0.58	0.70	0.81	0.83	0.96	0.39	0.49	0.59	0.88	1.00
		PI	4.81	4.82	4.84	4.85	4.87	4.85	4.85	4.85	4.85	4.87	4.87	4.87	4.87	4.87	4.87	4.92	4.92	4.92	4.81	4.82
	86°F(30.0°C)	TC	43986	45374	47194	47515	49682	47099	47123	47404	47530	49748	49371	49423	49447	49450	49833	53772	53775	53854	43986	45374
		S/T	0.90	1.00	1.00	1.00	1.00	0.71	0.84	0.96	0.98	1.00	0.58	0.71	0.82	0.84	0.97	0.39	0.50	0.60	0.90	1.00
		PI	4.94	4.96	4.98	4.98	5.01	4.98	4.98	4.98	4.98	5.01	5.01	5.01	5.01	5.01	5.01	5.07	5.07	5.07	4.94	4.96
	95°F(35.0°C)	TC	41272	41280	41507	41614	43329	43970	43965	43976	43978	44056	45910	45909	45908	45910	45931	49652	49635	49620	41272	41280
		S/T	0.77	0.87	0.96	0.98	1.00	0.63	0.72	0.80	0.82	0.91	0.53	0.62	0.70	0.72	0.81	0.39	0.46	0.53	0.77	0.87
		PI	5.05	5.05	5.06	5.07	5.17	5.21	5.21	5.21	5.21	5.21	5.32	5.32	5.32	5.32	5.32	5.54	5.54	5.54	5.05	5.05
	104°F(40.0°C)	TC	36977	36983	37363	37707	39193	39389	39387	39399	39400	39541	41130	41128	41131	41134	41150	44472	44456	44442	36977	36983
		S/T	0.79	0.89	0.99	1.00	1.00	0.63	0.74	0.82	0.84	0.94	0.54	0.64	0.72	0.73	0.83	0.39	0.46	0.54	0.79	0.89
		PI	4.60	4.60	4.62	4.64	4.73	4.74	4.74	4.74	4.74	4.75	4.85	4.85	4.85	4.85	4.85	5.05	5.05	5.05	4.60	4.60
	110°F(43.0°C)	TC	34176	34437	35765	35995	37531	36537	36550	36582	36616	37582	38251	38250	38265	38267	38334	41518	41506	41506	34176	34437
		S/T	0.85	0.97	1.00	1.00	1.00	0.67	0.79	0.89	0.91	1.00	0.56	0.68	0.77	0.79	0.90	0.39	0.48	0.57	0.85	0.97
		PI	4.38	4.40	4.45	4.46	4.53	4.49	4.49	4.49	4.49	4.53	4.56	4.56	4.56	4.56	4.56	4.71	4.71	4.71	4.38	4.40
	115°F(46.0°C)	TC	29029	29649	30807	31011	32381	31098	31109	31192	31236	32425	32591	32599	32610	32611	32733	35453	35437	35449	29029	29649
		S/T	0.88	1.00	1.00	1.00	1.00	0.69	0.82	0.92	0.94	1.00	0.57	0.69	0.80	0.82	0.94	0.39	0.49	0.58	0.88	1.00
		PI	3.80	3.83	3.87	3.88	3.93	3.88	3.88	3.89	3.89	3.93	3.94	3.94	3.94	3.94	3.94	4.05	4.05	4.05	3.80	3.83
	122°F(50.0°C)	TC	22250	23505	24544	24728	25964	23755	23815	24575	24759	25993	25024	25029	25070	25097	26018	27444	27453	27476	22250	23505
		S/T	1.00	1.00	1.00	1.00	1.00	0.76	0.92	1.00	1.00	1.00	0.62	0.77	0.89	0.92	1.00	0.40	0.52	0.64	1.00	1.00
		PI	3.05	3.08	3.10	3.11	3.13	3.09	3.09	3.10	3.11	3.13	3.12	3.11	3.11	3.11	3.13	3.18	3.17	3.17	3.05	3.08

Manufacturer reserves the right to change, at any time, specifications and designs without notice and without obligations.

Table 6 – 48K Cooling Performance (Continued)

AIRFLOW (CFM)	OUTDOOR DB °F(°C)	ID WB °F(°C)	60.8°F(16.0°C)					64.4°F(18.0°C)					67°F(19.4°C)					71.6°F(22.0°C)				
		ID DB °F °C	73.4°F 23.0°C	77.0°F 25.0°C	80.0°F 26.7°C	80.6°F 27.0°C	84.2°F 29.0°C	73.4°F 23.0°C	77.0°F 25.0°C	80.0°F 26.7°C	80.6°F 27.0°C	84.2°F 29.0°C	73.4°F 23.0°C	77.0°F 25.0°C	80.0°F 26.7°C	80.6°F 27.0°C	84.2°F 29.0°C	73.4°F 23.0°C	77.0°F 25.0°C	80.0°F 26.7°C	80.6°F 27.0°C	84.2°F 29.0°C
1324	-22°F(-30.0°C)	TC	36201	36188	36178	36389	37460	37795	37774	37757	37754	37728	38923	38903	38877	38873	38846	41059	41048	41018	36201	36188
		S/T	0.77	0.87	0.96	0.99	0.99	0.63	0.73	0.81	0.82	0.93	0.53	0.63	0.71	0.73	0.82	0.38	0.46	0.54	0.77	0.87
		PI	4.27	4.27	4.27	4.27	4.25	4.24	4.24	4.24	4.24	4.24	4.23	4.23	4.23	4.23	4.23	4.25	4.25	4.25	4.27	4.27
	-13°F(-25.0°C)	TC	39218	39204	39193	39421	40581	40945	40922	40904	40901	40872	42167	42145	42117	42112	42083	44481	44469	44436	39218	39204
		S/T	0.77	0.88	0.97	1.00	1.00	0.63	0.73	0.81	0.83	0.93	0.54	0.63	0.71	0.73	0.83	0.39	0.46	0.54	0.77	0.88
		PI	4.43	4.43	4.43	4.42	4.40	4.40	4.40	4.40	4.40	4.40	4.39	4.39	4.39	4.39	4.39	4.40	4.40	4.40	4.43	4.43
	-4°F(-20.0°C)	TC	42235	42220	42208	42453	43703	44094	44070	44050	44047	44016	45410	45387	45357	45352	45320	47902	47890	47854	42235	42220
		S/T	0.78	0.88	0.97	1.00	1.00	0.63	0.73	0.82	0.83	0.93	0.54	0.64	0.72	0.73	0.83	0.39	0.47	0.55	0.78	0.88
		PI	4.58	4.59	4.59	4.58	4.56	4.55	4.55	4.56	4.56	4.56	4.54	4.54	4.55	4.55	4.55	4.56	4.56	4.56	4.58	4.59
	0°F(-17.8°C)	TC	43628	43610	43778	44112	45334	45531	45496	45470	45466	45458	46866	46839	46796	46790	46748	49392	49377	49380	43628	43610
		S/T	0.78	0.89	0.99	1.00	1.00	0.64	0.74	0.83	0.84	0.95	0.54	0.64	0.73	0.74	0.84	0.39	0.47	0.55	0.78	0.89
		PI	4.62	4.62	4.62	4.62	4.61	4.61	4.61	4.61	4.61	4.61	4.61	4.61	4.62	4.62	4.62	4.65	4.65	4.65	4.62	4.62
	5°F(-15.0°C)	TC	44912	44952	45558	45767	47167	47048	47057	47062	47063	47295	48587	48583	48596	48597	48603	51490	51475	51476	44912	44952
		S/T	0.79	0.90	1.00	1.00	1.00	0.64	0.75	0.84	0.85	0.96	0.54	0.65	0.73	0.75	0.85	0.39	0.47	0.55	0.79	0.90
		PI	4.66	4.66	4.66	4.66	4.68	4.67	4.67	4.68	4.68	4.68	4.70	4.70	4.70	4.70	4.70	4.79	4.79	4.79	4.66	4.66
	14°F(-10.0°C)	TC	45947	45930	46120	46523	47967	48253	48226	48202	48199	48173	49921	49897	49859	49852	49810	53060	53044	53005	45947	45930
		S/T	0.78	0.89	0.99	1.00	1.00	0.64	0.74	0.82	0.84	0.94	0.54	0.64	0.72	0.74	0.83	0.39	0.47	0.55	0.78	0.89
		PI	4.58	4.58	4.58	4.58	4.57	4.56	4.56	4.56	4.56	4.57	4.55	4.55	4.55	4.55	4.56	4.57	4.57	4.57	4.58	4.58
	17°F(-8.3°C)	TC	46348	46360	46928	47199	48718	48676	48680	48690	48691	48922	50228	50247	50280	50282	50295	53569	53552	53558	46348	46360
		S/T	0.79	0.89	1.00	1.00	1.00	0.64	0.74	0.83	0.85	0.95	0.55	0.65	0.73	0.75	0.85	0.39	0.47	0.55	0.79	0.89
		PI	4.51	4.51	4.51	4.51	4.50	4.50	4.50	4.50	4.50	4.50	4.50	4.50	4.50	4.50	4.50	4.53	4.53	4.53	4.51	4.51
	23°F(-5.0°C)	TC	46598	46663	47422	47655	49213	48990	49002	49009	49010	49300	50717	50715	50731	50733	50742	53987	53971	53973	46598	46663
		S/T	0.80	0.91	1.00	1.00	1.00	0.65	0.75	0.84	0.86	0.97	0.54	0.65	0.74	0.75	0.85	0.39	0.47	0.56	0.80	0.91
		PI	4.31	4.31	4.32	4.32	4.34	4.33	4.34	4.34	4.34	4.34	4.36	4.36	4.36	4.36	4.36	4.44	4.44	4.44	4.31	4.31
	35°F(1.7°C)	TC	47745	47746	47839	47892	49123	50036	50029	50031	50032	50033	51644	51640	51635	51635	51641	54635	54622	54610	47745	47746
		S/T	0.75	0.85	0.93	0.94	1.00	0.62	0.71	0.79	0.80	0.89	0.53	0.62	0.69	0.71	0.80	0.39	0.46	0.53	0.75	0.85
		PI	3.70	3.70	3.71	3.71	3.83	3.92	3.92	3.92	3.92	3.92	4.09	4.09	4.08	4.08	4.09	4.44	4.44	4.44	3.70	3.70
	41°F(5.0°C)	TC	47515	47516	47648	47712	49066	49784	49778	49780	49780	49824	51377	51371	51367	51368	51373	54335	54322	54310	47515	47516
		S/T	0.76	0.86	0.94	0.96	1.00	0.62	0.72	0.80	0.81	0.90	0.53	0.62	0.70	0.71	0.81	0.39	0.46	0.53	0.76	0.86
		PI	4.10	4.11	4.12	4.13	4.27	4.36	4.36	4.36	4.36	4.36	4.56	4.56	4.56	4.56	4.56	4.97	4.96	4.96	4.10	4.11
	47°F(8.3°C)	TC	47281	47282	47464	47546	49009	49531	49524	49526	49526	49601	51109	51103	51099	51100	51103	54042	54028	54024	47281	47282
		S/T	0.77	0.87	0.95	0.97	1.00	0.63	0.72	0.81	0.82	0.91	0.53	0.63	0.71	0.72	0.82	0.39	0.46	0.54	0.77	0.87
		PI	4.51	4.51	4.53	4.54	4.73	4.80	4.80	4.80	4.80	4.81	5.03	5.03	5.03	5.03	5.03	5.48	5.48	5.48	4.51	4.51
	50°F(10.0°C)	TC	46773	47538	49126	49407	51300	49521	49551	49712	49775	51360	51472	51538	51568	51571	51804	55180	55207	55340	46773	47538
		S/T	0.87	1.00	1.00	1.00	1.00	0.69	0.81	0.92	0.94	1.00	0.57	0.69	0.80	0.81	0.93	0.39	0.49	0.58	0.87	1.00
		PI	5.04	5.04	5.04	5.04	5.03	5.04	5.04	5.04	5.04	5.03	5.03	5.03	5.03	5.03	5.03	5.03	5.03	5.03	5.04	5.04
	59°F(15.0°C)	TC	47865	49018	50743	51048	53102	50787	50809	51061	51159	53164	52895	52952	52973	52976	53326	56935	56950	57062	47865	49018
		S/T	0.88	1.00	1.00	1.00	1.00	0.70	0.83	0.94	0.97	1.00	0.58	0.71	0.81	0.83	0.96	0.39	0.50	0.59	0.88	1.00
		PI	5.02	5.03	5.04	5.05	5.06	5.05	5.05	5.05	5.05	5.06	5.06	5.06	5.06	5.06	5.06	5.09	5.09	5.09	5.02	5.03
	68°F(20.0°C)	TC	48992	50572	52433	52764	54982	52054	52070	52477	52820	55044	54319	54364	54379	54381	55000	58653	58672	58766	48992	50572
		S/T	0.91	1.00	1.00	1.00	1.00	0.72	0.85	0.97	1.00	1.00	0.59	0.72	0.84	0.86	0.99	0.40	0.50	0.61	0.91	1.00
		PI	5.01	5.03	5.06	5.06	5.09	5.05	5.05	5.06	5.06	5.09	5.09	5.09	5.09	5.09	5.09	5.16	5.15	5.15	5.01	5.03
	77°F(25.0°C)	TC	50012	51928	53941	54299	56699	53264	53289	53901	54363	56766	55695	55759	55785	55849	56817	60321	60375	60511	50012	51928
		S/T	0.92	1.00	1.00	1.00	1.00	0.72	0.87	0.99	1.00	1.00	0.59	0.73	0.85	0.86	1.00	0.40	0.51	0.61	0.92	1.00
		PI	5.05	5.07	5.09	5.10	5.12	5.09	5.08	5.09	5.10	5.12	5.11	5.11	5.11	5.11	5.12	5.17	5.17	5.17	5.05	5.07
	82°F(27.8°C)	TC	49586	51689	53749	54115	56576	52859	52945	53814	54181	56640	55333	55406	55434	55521	56691	60018	60095	60245	49586	51689
		S/T	0.94	1.00	1.00	1.00	1.00	0.73	0.87	1.00	1.00	1.00	0.60	0.74	0.86	0.87	1.00	0.40	0.51	0.62	0.94	1.00
		PI	5.13	5.15	5.17	5.18	5.20	5.17	5.17	5.17	5.18	5.20	5.19	5.19	5.19	5.19	5.20	5.25	5.25	5.24	5.13	5.15
	86°F(30.0°C)	TC	47970	50192	52228	52588	55039	51138	51244	52291	52651	55082	53577	53640	53725	53774	55133	58182	58267	58403	47970	50192
		S/T	0.95	1.00	1.00	1.00	1.00	0.74	0.88	1.00	1.00	1.00	0.60	0.75	0.86	0.88	1.00	0.40	0.51	0.62	0.95	1.00
		PI	5.27	5.29	5.32	5.33	5.36	5.31	5.31	5.32	5.33	5.36	5.34	5.34	5.34	5.34	5.36	5.41	5.40	5.40	5.27	5.29
	95°F(35.0°C)	TC	44913	44993	45959	46230	48042	47786	47797	47814	47816	48140	49849	49854	49879	49884	49906	53813	53794	53800	44913	44993
		S/T	0.80	0.91	1.00	1.00	1.00	0.65	0.75	0.84	0.86	0.96	0.54	0.65	0.73	0.75	0.85	0.39	0.47	0.55	0.80	0.91
		PI	5.38	5.39	5.44	5.46	5.56	5.55	5.55	5.55	5.55	5.57	5.67	5.67	5.67	5.67	5.67	5.91	5.91	5.91	5.38	5.39
	104°F(40.0°C)	TC	40234	40377	41541	41786	43443	42808	42823	42834	42836	43400	44658	44666	44690	44693	44707	48207	48189	48200	40234	40377
		S/T	0.82	0.94	1.00	1.00	1.00	0.66	0.77	0.86	0.88	1.00	0.55	0.66	0.75	0.77	0.87	0.39	0.47	0.56	0.82	0.94
		PI	4.91	4.91	4.98	5.00	5.09	5.06	5.06	5.06	5.06	5.09	5.17	5.16	5.17	5.16	5.16	5.38	5.38	5.38	4.91	4.91
	110°F(43.0°C)	TC	37184	38190	39639	39896	41609	39723	39737	39910	39987	41655	41538	41562	41576	41576	41819	45025	45005	45050	37184	38190
		S/T	0.89	1.00	1.00	1.00	1.00	0.70	0.83	0.94	0.96	1.00	0.58	0.70	0.81	0.83	0.96	0.39	0.49	0.59	0.89	1.00
		PI	4.67	4.71	4.78	4.79	4.86	4.78	4.78	4.79	4.79	4.87	4.86	4.86	4.86	4.86	4.87	5.02	5.02	5.02	4.67	4.71
	115°F(46.0°C)	TC	31624	32815	34104	34333	35864	33778	33786	34081	34377	35905	35389	35421	35431	35432	35938	38407	38389	38448	31624	32815
		S/T	0.92	1.00	1.00	1.00	1.00	0.72	0.86	0.98	1.00	1.00	0.59	0.73	0.84	0.86	1.00	0.40	0.50	0.61	0.92	1.00
		PI	4.04	4.09	4.14	4.15	4.20	4.13	4.13	4.14	4.15	4.21	4.20	4.20	4.20	4.20	4.21	4.31	4.31	4.31	4.04	4.09
	122°F(50.0°C)	TC	24593	25940	27094	27300	28671	25732	25934	27125	27331	28701	27098	27097	27238	27319	28726	29657	29715	29731	24593	25940
		S/T	1.00	1.00	1.00	1.00	1.00	0.80	0.98	1.00	1.00	1.00	0.64	0.81	0.95	0.98	1.00	0.41	0.54	0.67	1.00	1.00
		PI	3.26	3.29	3.32	3.32	3.35	3.29	3.29	3.32	3.32	3.35	3.32	3.32	3.32	3.32	3.35	3.39	3.38	3.38	3.26	3.29

Manufacturer reserves the right to change, at any time, specifications and designs without notice and without obligations.

Table 6 – 48K Cooling Performance (Continued)

AIRFLOW (CFM)	OUTDOOR DB °F(°C)	ID WB °F(°C)	60.8°F(16.0°C)					64.4°F(18.0°C)					67°F(19.4°C)					71.6°F(22.0°C)				
		ID DB °F °C	73.4°F 23.0°C	77.0°F 25.0°C	80.0°F 26.7°C	80.6°F 27.0°C	84.2°F 29.0°C	73.4°F 23.0°C	77.0°F 25.0°C	80.0°F 26.7°C	80.6°F 27.0°C	84.2°F 29.0°C	73.4°F 23.0°C	77.0°F 25.0°C	80.0°F 26.7°C	80.6°F 27.0°C	84.2°F 29.0°C	73.4°F 23.0°C	77.0°F 25.0°C	80.0°F 26.7°C	80.6°F 27.0°C	84.2°F 29.0°C
1481	-22°F(-30.0°C)	TC	39397	39379	39941	40106	41210	41105	41071	41045	41041	41007	42334	42281	42241	42235	42194	44654	44642	44550	39397	39379
		S/T	0.80	0.91	0.99	0.99	0.99	0.64	0.75	0.84	0.86	0.97	0.55	0.65	0.74	0.75	0.86	0.39	0.47	0.55	0.80	0.91
		PI	4.58	4.58	4.57	4.57	4.56	4.56	4.56	4.56	4.56	4.56	4.55	4.55	4.55	4.55	4.56	4.58	4.58	4.58	4.58	4.58
	-13°F(-25.0°C)	TC	42680	42660	43269	43448	44644	44530	44494	44465	44461	44424	45862	45804	45761	45754	45710	48375	48362	48263	42680	42660
		S/T	0.80	0.91	1.00	1.00	1.00	0.65	0.75	0.85	0.86	0.97	0.55	0.65	0.74	0.76	0.86	0.39	0.47	0.56	0.80	0.91
		PI	4.75	4.75	4.74	4.74	4.73	4.72	4.73	4.73	4.73	4.73	4.72	4.72	4.72	4.72	4.72	4.75	4.75	4.75	4.75	4.75
	-4°F(-20.0°C)	TC	45963	45942	46597	46790	48078	47956	47916	47886	47881	47842	49389	49327	49281	49274	49227	52096	52082	51975	45963	45942
		S/T	0.80	0.92	1.00	1.00	1.00	0.65	0.76	0.85	0.87	0.98	0.55	0.65	0.74	0.76	0.86	0.39	0.48	0.56	0.80	0.92
		PI	4.92	4.92	4.91	4.91	4.90	4.89	4.90	4.90	4.90	4.90	4.89	4.89	4.89	4.89	4.89	4.92	4.92	4.92	4.92	4.92
	0°F(-17.8°C)	TC	47488	47460	48341	48543	49876	49525	49470	49432	49426	49923	50981	50908	50845	50838	50813	53722	53710	53705	47488	47460
		S/T	0.81	0.93	1.00	1.00	1.00	0.66	0.77	0.86	0.88	1.00	0.55	0.66	0.75	0.77	0.87	0.39	0.48	0.57	0.81	0.93
		PI	4.96	4.96	4.96	4.96	4.96	4.96	4.96	4.96	4.96	4.96	4.96	4.97	4.97	4.97	4.97	5.02	5.02	5.02	4.96	4.96
	5°F(-15.0°C)	TC	48850	49018	50138	50370	51922	51141	51154	51157	51210	51973	52776	52790	52801	52802	52872	55872	55855	55884	48850	49018
		S/T	0.82	0.94	1.00	1.00	1.00	0.66	0.78	0.87	0.88	1.00	0.56	0.67	0.76	0.78	0.88	0.39	0.48	0.57	0.82	0.94
		PI	5.00	5.00	5.01	5.01	5.04	5.02	5.02	5.03	5.03	5.04	5.06	5.06	5.06	5.06	5.06	5.17	5.17	5.17	5.00	5.00
	14°F(-10.0°C)	TC	50014	49989	51009	51248	52837	52497	52451	52415	52409	52900	54296	54227	54172	54164	54109	57733	57715	57605	50014	49989
		S/T	0.81	0.93	1.00	1.00	1.00	0.65	0.76	0.86	0.87	1.00	0.55	0.66	0.75	0.76	0.87	0.39	0.48	0.56	0.81	0.93
		PI	4.92	4.92	4.91	4.91	4.90	4.90	4.90	4.90	4.90	4.90	4.89	4.90	4.90	4.90	4.90	4.92	4.92	4.92	4.92	4.92
	17°F(-8.3°C)	TC	50283	50447	51613	51864	53549	52786	52808	52817	52862	53607	54587	54608	54630	54632	54699	58055	58039	58030	50283	50447
		S/T	0.82	0.93	1.00	1.00	1.00	0.66	0.77	0.87	0.88	1.00	0.55	0.66	0.76	0.77	0.87	0.39	0.48	0.57	0.82	0.93
		PI	4.84	4.84	4.84	4.84	4.84	4.84	4.84	4.84	4.84	4.84	4.84	4.84	4.84	4.85	4.85	4.88	4.88	4.88	4.84	4.84
	23°F(-5.0°C)	TC	50684	50902	52219	52477	54206	53250	53267	53272	53342	54264	55087	55106	55120	55122	55211	58574	58556	58598	50684	50902
		S/T	0.83	0.95	1.00	1.00	1.00	0.66	0.78	0.88	0.89	1.00	0.56	0.67	0.76	0.78	0.89	0.39	0.48	0.57	0.83	0.95
		PI	4.63	4.63	4.65	4.65	4.68	4.66	4.66	4.66	4.66	4.68	4.69	4.69	4.70	4.70	4.70	4.78	4.78	4.78	4.63	4.63
	35°F(1.7°C)	TC	51971	51972	52278	52424	54115	54400	54398	54402	54403	54548	56103	56099	56102	56103	56109	59262	59248	59245	51971	51972
		S/T	0.78	0.88	0.97	0.99	1.00	0.63	0.73	0.82	0.83	0.93	0.54	0.63	0.72	0.73	0.83	0.39	0.46	0.54	0.78	0.88
		PI	3.97	3.97	4.00	4.02	4.18	4.21	4.21	4.21	4.21	4.23	4.40	4.40	4.40	4.40	4.40	4.78	4.78	4.78	3.97	3.97
	41°F(5.0°C)	TC	51718	51718	52130	52493	54044	54123	54122	54125	54125	54315	55812	55808	55811	55812	55815	58943	58929	58925	51718	51718
		S/T	0.78	0.89	0.98	1.00	1.00	0.64	0.74	0.83	0.84	0.94	0.54	0.64	0.72	0.74	0.84	0.39	0.47	0.55	0.78	0.89
		PI	4.41	4.41	4.45	4.50	4.68	4.69	4.69	4.69	4.69	4.71	4.90	4.90	4.90	4.90	4.90	5.34	5.34	5.34	4.41	4.41
	47°F(8.3°C)	TC	51463	51497	52187	52421	53972	53849	53847	53848	53848	54097	55521	55516	55520	55519	55519	58629	58615	58610	51463	51497
		S/T	0.79	0.90	1.00	1.00	1.00	0.64	0.75	0.84	0.85	0.96	0.54	0.65	0.73	0.75	0.85	0.39	0.47	0.55	0.79	0.90
		PI	4.85	4.85	4.94	4.97	5.19	5.17	5.17	5.17	5.17	5.20	5.41	5.41	5.41	5.41	5.41	5.90	5.90	5.89	4.85	4.85
	50°F(10.0°C)	TC	50951	52353	54120	54434	56544	53827	53857	54229	54400	56598	55927	56000	56029	56033	56571	59782	59940	60094	50951	52353
		S/T	0.90	1.00	1.00	1.00	1.00	0.71	0.85	0.96	0.99	1.00	0.59	0.72	0.83	0.85	0.99	0.40	0.50	0.60	0.90	1.00
		PI	5.42	5.42	5.42	5.42	5.42	5.42	5.42	5.42	5.42	5.42	5.42	5.42	5.42	5.42	5.42	5.41	5.41	5.41	5.42	5.42
	59°F(15.0°C)	TC	52173	54003	55920	56260	58549	55201	55277	55904	56320	58607	57479	57537	57556	57640	58656	61721	61844	61967	52173	54003
		S/T	0.92	1.00	1.00	1.00	1.00	0.73	0.86	1.00	1.00	1.00	0.60	0.73	0.85	0.86	1.00	0.40	0.51	0.61	0.92	1.00
		PI	5.41	5.42	5.43	5.44	5.45	5.43	5.43	5.43	5.44	5.45	5.45	5.45	5.45	5.45	5.45	5.48	5.48	5.48	5.41	5.42
	68°F(20.0°C)	TC	53361	55639	57702	58069	60533	56491	56619	57765	58132	60593	58934	58978	59084	59136	60643	63501	63619	63719	53361	55639
		S/T	0.95	1.00	1.00	1.00	1.00	0.74	0.89	1.00	1.00	1.00	0.61	0.75	0.87	0.89	1.00	0.40	0.51	0.63	0.95	1.00
		PI	5.39	5.42	5.45	5.46	5.49	5.44	5.44	5.45	5.46	5.49	5.48	5.47	5.47	5.47	5.49	5.55	5.55	5.54	5.39	5.42
	77°F(25.0°C)	TC	54496	57120	59355	59751	62420	57772	57956	59420	59817	62483	60389	60457	60611	60679	62536	65223	65421	65572	54496	57120
		S/T	0.97	1.00	1.00	1.00	1.00	0.75	0.90	1.00	1.00	1.00	0.61	0.76	0.88	0.90	1.00	0.40	0.52	0.63	0.97	1.00
		PI	5.43	5.46	5.49	5.49	5.52	5.47	5.47	5.49	5.49	5.52	5.50	5.50	5.50	5.50	5.52	5.57	5.56	5.56	5.43	5.46
	82°F(27.8°C)	TC	54074	56835	59127	59528	62254	57302	57523	59179	59595	62319	59967	60043	60230	60304	62374	64837	65081	65251	54074	56835
		S/T	0.99	1.00	1.00	1.00	1.00	0.76	0.91	1.00	1.00	1.00	0.62	0.77	0.89	0.92	1.00	0.40	0.52	0.64	0.99	1.00
		PI	5.52	5.55	5.58	5.58	5.61	5.56	5.56	5.57	5.58	5.61	5.59	5.59	5.59	5.59	5.61	5.65	5.65	5.64	5.52	5.55
	86°F(30.0°C)	TC	52594	55219	57478	57879	60574	55465	55720	57541	57945	60637	58093	58160	58373	58457	60689	62892	63135	63285	52594	55219
		S/T	1.00	1.00	1.00	1.00	1.00	0.77	0.93	1.00	1.00	1.00	0.62	0.78	0.91	0.93	1.00	0.40	0.52	0.64	1.00	1.00
		PI	5.67	5.71	5.73	5.74	5.77	5.71	5.71	5.73	5.74	5.77	5.75	5.74	5.75	5.75	5.77	5.82	5.82	5.81	5.67	5.71
	95°F(35.0°C)	TC	48855	49118	50706	51006	53022	51922	51952	51969	52030	53089	54150	54161	54195	54200	54290	58349	58327	58339	48855	49118
		S/T	0.83	0.95	1.00	1.00	1.00	0.66	0.78	0.88	0.89	1.00	0.56	0.67	0.76	0.78	0.88	0.39	0.48	0.57	0.83	0.95
		PI	5.79	5.80	5.89	5.91	6.03	5.97	5.97	5.97	5.97	6.03	6.10	6.10	6.10	6.10	6.11	6.35	6.35	6.35	5.79	5.80
	104°F(40.0°C)	TC	43768	44169	45832	46107	47946	46526	46552	46634	46684	48006	48511	48531	48556	48558	48696	52287	52267	52292	43768	44169
		S/T	0.85	0.98	1.00	1.00	1.00	0.68	0.80	0.90	0.92	1.00	0.56	0.68	0.78	0.80	0.91	0.39	0.48	0.58	0.85	0.98
		PI	5.28	5.30	5.40	5.41	5.52	5.44	5.44	5.44	5.45	5.52	5.56	5.56	5.56	5.56	5.56	5.79	5.79	5.78	5.28	5.30
	110°F(43.0°C)	TC	40560	42119	43725	44009	45915	43182	43195	43678	44060	45963	45126	45162	45172	45207	46003	48844	48846	48922	40560	42119
		S/T	0.92	1.00	1.00	1.00	1.00	0.72	0.87	0.99	1.00	1.00	0.60	0.73	0.85	0.86	1.00	0.40	0.51	0.61	0.92	1.00
		PI	5.03	5.10	5.17	5.18	5.26	5.15	5.15	5.16	5.18	5.27	5.23	5.23	5.23	5.23	5.27	5.41	5.40	5.40	5.03	5.10
	115°F(46.0°C)	TC	34519	36182	37612	37892	39561	36709	36782	37655	37940	39601	38420	38444	38496	38534	39635	41659	41690	41748	34519	36182
		S/T	0.96	1.00	1.00	1.00	1.00	0.75	0.89	1.00	1.00	1.00	0.61	0.75	0.87	0.90	1.00	0.40	0.52	0.63	0.96	1.00
		PI	4.37	4.43	4.49	4.51	4.56	4.45	4.46	4.49	4.51	4.56	4.52	4.52	4.52	4.52	4.56	4.66	4.65	4.65	4.37	4.43
	122°F(50.0°C)	TC	26796	28275	29541	29761	31264	27651	28305	29574	29794	31294	29119	29111	29595	29818	31313	31796	31920	31927	26796	28275
		S/T	1.00	1.00	1.00	1.00	1.00	0.84	1.00	1.00	1.00	1.00	0.67	0.85	1.00	1.00	1.00	0.41	0.55	0.69	1.00	1.00
		PI	3.51	3.54	3.57	3.58	3.61	3.53	3.54	3.57	3.58	3.61	3.57	3.56	3.57	3.58	3.61	3.65	3.63	3.63	3.51	3.54

Manufacturer reserves the right to change, at any time, specifications and designs without notice and without obligations.

HEATING PERFORMANCE

INDEX

Table 7, “18K Heating Performance,” on page 31
Table 8, “27K Heating Performance,” on page 33
Table 9, “36K Heating Performance,” on page 35
Table 10, “48K Heating Performance,” on page 37

HEATING PERFORMANCE 18K

Table 7 – 18K Heating Performance

AIRFLOW (CFM)	OUTDOOR DB°F(°C)	HEATING PERFORMANCE AT INDOOR DRY BULB TEMPERATURE									
		TC: Total Heating Capacity (BTU/hr)					PI: Power Input (kW)				
		Indoor Conditions (DB °F(°C))					Indoor Conditions (DB °F(°C))				
		60.8°F (16.0°C)	68°F (20.0°C)	70°F (21.1°C)	71.6°F (22.0°C)	75.2°F (24.0°C)	60.8°F (16.0°C)	68°F (20.0°C)	70°F (21.1°C)	71.6°F (22.0°C)	75.2°F (24.0°C)
262	-22°F(-15.0°C)	10688	10475	10422	10142	10050	0.00	0.00	0.00	0.00	0.00
	-13°F(-25.0°C)	6873	6736	6702	6271	6214	1.23	1.24	1.24	1.24	1.25
	-4°F(-20.0°C)	8474	8305	8263	7732	7662	1.35	1.36	1.36	1.37	1.37
	0°F(-17.8°C)	9157	8974	8929	8355	8279	1.45	1.46	1.46	1.46	1.47
	5°F(-15.0°C)	10011	9810	9761	9133	9051	1.57	1.58	1.58	1.59	1.59
	14°F(-10.0°C)	9642	9449	9402	8797	8718	1.47	1.49	1.49	1.49	1.50
	17°F(-8.3°C)	9519	9329	9282	8685	8607	1.44	1.45	1.46	1.46	1.47
	22°F(-5.6°C)	9793	9597	9549	8935	8854	1.39	1.40	1.40	1.40	1.41
	27°F(-2.8°C)	10066	9865	9816	9184	9101	1.33	1.34	1.34	1.34	1.35
	32°F(-0.0°C)	10340	10133	10082	9434	9349	1.27	1.28	1.28	1.29	1.29
	35°F(1.7°C)	10504	10294	10242	9583	9497	1.24	1.25	1.25	1.25	1.26
	37°F(2.8°C)	11012	10792	10738	10047	9957	1.25	1.26	1.26	1.27	1.27
	42°F(5.6°C)	12282	12036	11976	11206	11105	1.29	1.30	1.30	1.30	1.31
	44.6°F(7.0°C)	12790	12534	12472	11669	11564	1.30	1.31	1.31	1.32	1.32
	47°F(8.3°C)	13552	13281	13215	12364	12253	1.32	1.33	1.33	1.34	1.34
	52°F(11.1°C)	13773	13497	13430	12566	12453	1.25	1.26	1.26	1.27	1.27
	57°F(13.9°C)	13994	13714	13645	12767	12652	1.18	1.19	1.19	1.19	1.20
	59°F(15.0°C)	14082	13800	13731	12848	12732	1.15	1.16	1.16	1.16	1.17
	62°F(16.7°C)	14214	13930	13860	12969	12852	1.11	1.12	1.12	1.12	1.13
	64.4°F(18.0°C)	14320	14034	13964	13065	12948	1.07	1.08	1.08	1.09	1.09
	69.8°F(-21.0°C	14559	14267	14196	13283	13163	1.00	1.00	1.01	1.01	1.01
	75.2°F(24.0°C)	14797	14501	14429	13500	13379	0.92	0.93	0.93	0.93	0.93
432	-22°F(-15.0°C)	12661	12407	12345	12154	12044	0.00	0.00	0.00	0.00	0.00
	-13°F(-25.0°C)	7983	7824	7784	7515	7447	1.36	1.37	1.38	1.38	1.39
	-4°F(-20.0°C)	9843	9646	9598	9265	9182	1.50	1.51	1.51	1.52	1.52
	0°F(-17.8°C)	10636	10423	10371	10012	9922	1.61	1.62	1.62	1.63	1.63
	5°F(-15.0°C)	11627	11395	11338	10945	10847	1.74	1.76	1.76	1.76	1.77
	14°F(-10.0°C)	11199	10975	10921	10542	10447	1.64	1.65	1.65	1.66	1.66
	17°F(-8.3°C)	11057	10836	10781	10408	10314	1.60	1.62	1.62	1.62	1.63
	22°F(-5.6°C)	11374	11147	11091	10707	10611	1.54	1.55	1.56	1.56	1.56
	27°F(-2.8°C)	11692	11458	11401	11006	10907	1.48	1.49	1.49	1.49	1.50
	32°F(-0.0°C)	12010	11770	11711	11305	11203	1.41	1.42	1.43	1.43	1.44
	35°F(1.7°C)	12201	11957	11897	11485	11381	1.38	1.39	1.39	1.39	1.40
	37°F(2.8°C)	12791	12535	12472	12040	11932	1.39	1.40	1.40	1.41	1.41
	42°F(5.6°C)	14266	13980	13911	13429	13308	1.43	1.44	1.44	1.45	1.45
	44.6°F(7.0°C)	14856	14559	14486	13984	13858	1.45	1.46	1.46	1.46	1.47
	47°F(8.3°C)	15741	15426	15349	14817	14684	1.47	1.48	1.48	1.49	1.49
	52°F(11.1°C)	15997	15677	15599	15059	14923	1.39	1.40	1.40	1.41	1.41
	57°F(13.9°C)	16254	15929	15849	15300	15162	1.31	1.32	1.32	1.33	1.33
	59°F(15.0°C)	16356	16029	15949	15396	15258	1.28	1.29	1.29	1.29	1.30
	62°F(16.7°C)	16510	16180	16099	15541	15401	1.23	1.24	1.24	1.25	1.25
	64.4°F(18.0°C)	16633	16300	16219	15657	15516	1.19	1.20	1.20	1.21	1.21
	69.8°F(-21.0°C	16910	16572	16489	15918	15774	1.11	1.12	1.12	1.12	1.12
	75.2°F(24.0°C)	17187	16843	16759	16178	16033	1.02	1.03	1.03	1.03	1.04

Manufacturer reserves the right to change, at any time, specifications and designs without notice and without obligations.

Table 7 – 18K Heating Performance (Continued)

AIRFLOW (CFM)	OUTDOOR DB°F(°C)	HEATING PERFORMANCE AT INDOOR DRY BULB TEMPERATURE									
		TC: Total Heating Capacity (BTU/hr)					PI: Power Input (kW)				
		Indoor Conditions (DB °F(°C))					Indoor Conditions (DB °F(°C))				
		60.8°F (16.0°C)	68°F (20.0°C)	70°F (21.1°C)	71.6°F (22.0°C)	75.2°F (24.0°C)	60.8°F (16.0°C)	68°F (20.0°C)	70°F (21.1°C)	71.6°F (22.0°C)	75.2°F (24.0°C)
533	-22°F(-15.0°C)	14997	14697	14623	14565	14434	0.00	0.00	0.00	0.00	0.00
	-13°F(-25.0°C)	9273	9087	9042	9006	8925	1.51	1.53	1.53	1.53	1.54
	-4°F(-20.0°C)	11433	11204	11148	11103	11003	1.67	1.68	1.68	1.69	1.69
	0°F(-17.8°C)	12354	12107	12046	11998	11890	1.79	1.80	1.80	1.81	1.82
	5°F(-15.0°C)	13505	13235	13169	13116	12998	1.94	1.95	1.96	1.96	1.97
	14°F(-10.0°C)	13008	12748	12684	12634	12520	1.82	1.83	1.84	1.84	1.85
	17°F(-8.3°C)	12843	12586	12523	12473	12360	1.78	1.80	1.80	1.80	1.81
	22°F(-5.6°C)	13212	12947	12883	12831	12716	1.71	1.72	1.73	1.73	1.74
	27°F(-2.8°C)	13581	13309	13242	13190	13071	1.64	1.65	1.66	1.66	1.67
	32°F(-0.0°C)	13950	13671	13602	13548	13426	1.57	1.58	1.59	1.59	1.60
	35°F(1.7°C)	14171	13888	13818	13763	13639	1.53	1.54	1.54	1.55	1.55
	37°F(2.8°C)	14856	14559	14487	14429	14299	1.55	1.56	1.56	1.56	1.57
	42°F(5.6°C)	16570	16238	16157	16093	15948	1.59	1.60	1.60	1.61	1.61
	44.6°F(7.0°C)	17255	16910	16826	16758	16607	1.61	1.62	1.62	1.63	1.63
	47°F(8.3°C)	18283	17918	17828	17757	17597	1.63	1.64	1.65	1.65	1.66
	52°F(11.1°C)	18581	18209	18118	18046	17883	1.54	1.56	1.56	1.56	1.57
	57°F(13.9°C)	18879	18501	18409	18335	18170	1.46	1.47	1.47	1.47	1.48
	59°F(15.0°C)	18998	18618	18525	18451	18285	1.42	1.43	1.43	1.44	1.44
	62°F(16.7°C)	19177	18793	18699	18624	18457	1.37	1.38	1.38	1.38	1.39
	64.4°F(18.0°C)	19320	18933	18839	18763	18594	1.32	1.34	1.34	1.34	1.35
	69.8°F(-21.0°C	19641	19248	19152	19076	18904	1.23	1.24	1.24	1.24	1.25
	75.2°F(24.0°C)	19963	19564	19466	19388	19213	1.13	1.14	1.15	1.15	1.15
638	-22°F(-15.0°C)	17419	17070	16985	16917	16765	0.00	0.00	0.00	0.00	0.00
	-13°F(-25.0°C)	10770	10555	10502	10460	10366	1.68	1.70	1.70	1.70	1.71
	-4°F(-20.0°C)	13279	13014	12949	12897	12781	1.85	1.87	1.87	1.87	1.88
	0°F(-17.8°C)	14349	14062	13992	13936	13810	1.99	2.00	2.01	2.01	2.02
	5°F(-15.0°C)	15687	15373	15296	15235	15098	2.15	2.17	2.17	2.18	2.19
	14°F(-10.0°C)	15109	14807	14733	14674	14542	2.02	2.04	2.04	2.05	2.06
	17°F(-8.3°C)	14917	14618	14545	14487	14357	1.98	2.00	2.00	2.00	2.01
	22°F(-5.6°C)	15345	15039	14963	14903	14769	1.90	1.92	1.92	1.92	1.93
	27°F(-2.8°C)	15774	15459	15381	15320	15182	1.82	1.84	1.84	1.84	1.85
	32°F(-0.0°C)	16203	15879	15799	15736	15594	1.74	1.76	1.76	1.77	1.77
	35°F(1.7°C)	16460	16131	16050	15986	15842	1.70	1.71	1.72	1.72	1.73
	37°F(2.8°C)	17256	16911	16826	16759	16608	1.72	1.73	1.73	1.74	1.74
	42°F(5.6°C)	19246	18861	18767	18692	18524	1.76	1.78	1.78	1.79	1.79
	44.6°F(7.0°C)	20042	19641	19543	19465	19290	1.78	1.80	1.80	1.81	1.81
	47°F(8.3°C)	21236	20811	20707	20625	20439	1.81	1.83	1.83	1.83	1.84
	52°F(11.1°C)	21582	21150	21045	20961	20772	1.71	1.73	1.73	1.74	1.74
	57°F(13.9°C)	21928	21489	21382	21296	21105	1.62	1.63	1.63	1.64	1.64
	59°F(15.0°C)	22066	21625	21517	21431	21238	1.58	1.59	1.59	1.60	1.60
	62°F(16.7°C)	22274	21828	21719	21632	21438	1.52	1.53	1.53	1.54	1.54
	64.4°F(18.0°C)	22440	21991	21881	21794	21597	1.47	1.48	1.49	1.49	1.50
	69.8°F(-21.0°C	22813	22357	22245	22156	21957	1.37	1.38	1.38	1.38	1.39
	75.2°F(24.0°C)	23187	22723	22610	22519	22317	1.26	1.27	1.27	1.28	1.28

HEATING PERFORMANCE 27K

Table 8 – 27K Heating Performance

AIRFLOW (CFM)	OUTDOOR DB°F(°C)	HEATING PERFORMANCE AT INDOOR DRY BULB TEMPERATURE									
		TC: Total Heating Capacity (BTU/hr)					PI: Power Input (kW)				
		Indoor Conditions (DB °F(°C))					Indoor Conditions (DB °F(°C))				
		60.8°F (16.0°C)	68°F (20.0°C)	70°F (21.1°C)	71.6°F (22.0°C)	75.2°F (24.0°C)	60.8°F (16.0°C)	68°F (20.0°C)	70°F (21.1°C)	71.6°F (22.0°C)	75.2°F (24.0°C)
539	-22°F(-15.0°C)	16023	15703	15624	15690	15548	0.00	0.00	0.00	0.00	0.00
	-13°F(-25.0°C)	5664	5550	5523	5333	5285	1.50	1.51	1.51	1.51	1.52
	-4°F(-20.0°C)	7789	7633	7595	7334	7268	1.60	1.61	1.62	1.62	1.63
	0°F(-17.8°C)	9856	9659	9611	9280	9196	1.69	1.70	1.70	1.71	1.71
	5°F(-15.0°C)	12440	12191	12130	11713	11607	1.79	1.81	1.81	1.81	1.82
	14°F(-10.0°C)	11032	10811	10757	10387	10294	1.62	1.64	1.64	1.64	1.65
	17°F(-8.3°C)	10563	10352	10300	9945	9856	1.57	1.58	1.58	1.58	1.59
	22°F(-5.6°C)	12271	12026	11966	11554	11450	1.62	1.63	1.63	1.64	1.64
	27°F(-2.8°C)	13980	13700	13632	13162	13044	1.67	1.68	1.69	1.69	1.70
	32°F(-0.0°C)	15688	15375	15298	14771	14638	1.72	1.74	1.74	1.74	1.75
	35°F(1.7°C)	16713	16379	16297	15736	15595	1.75	1.77	1.77	1.77	1.78
	37°F(2.8°C)	17287	16941	16856	16276	16130	1.77	1.78	1.79	1.79	1.80
	42°F(5.6°C)	18720	18346	18254	17626	17467	1.81	1.83	1.83	1.84	1.84
	44.6°F(7.0°C)	19294	18908	18813	18166	18002	1.83	1.85	1.85	1.85	1.86
	47°F(8.3°C)	20154	19751	19652	18976	18805	1.86	1.87	1.88	1.88	1.89
	52°F(11.1°C)	19857	19460	19363	18696	18528	1.66	1.67	1.67	1.68	1.68
	57°F(13.9°C)	19560	19169	19073	18417	18251	1.45	1.47	1.47	1.47	1.48
	59°F(15.0°C)	19441	19053	18957	18305	18140	1.37	1.39	1.39	1.39	1.40
	62°F(16.7°C)	19263	18878	18784	18137	17974	1.25	1.26	1.27	1.27	1.27
	64.4°F(18.0°C)	19121	18738	18645	18003	17841	1.16	1.17	1.17	1.17	1.18
	69.8°F(-21.0°C	18800	18424	18332	17701	17542	0.94	0.95	0.95	0.95	0.96
	75.2°F(24.0°C)	18480	18110	18020	17399	17243	0.72	0.73	0.73	0.73	0.74
671	-22°F(-15.0°C)	18861	18483	18391	18393	18227	0.00	0.00	0.00	0.00	0.00
	-13°F(-25.0°C)	6537	6406	6374	6251	6195	1.70	1.71	1.72	1.72	1.73
	-4°F(-20.0°C)	8990	8811	8766	8597	8520	1.82	1.83	1.84	1.84	1.85
	0°F(-17.8°C)	11376	11149	11093	10879	10781	1.92	1.93	1.94	1.94	1.95
	5°F(-15.0°C)	14359	14072	14001	13731	13607	2.04	2.05	2.06	2.06	2.07
	14°F(-10.0°C)	12734	12479	12417	12177	12067	1.84	1.86	1.86	1.87	1.87
	17°F(-8.3°C)	12192	11948	11888	11659	11554	1.78	1.79	1.80	1.80	1.81
	22°F(-5.6°C)	14164	13881	13811	13544	13422	1.84	1.85	1.86	1.86	1.87
	27°F(-2.8°C)	16136	15813	15734	15430	15291	1.90	1.91	1.92	1.92	1.93
	32°F(-0.0°C)	18108	17746	17657	17316	17160	1.96	1.97	1.98	1.98	1.99
	35°F(1.7°C)	19291	18905	18811	18447	18281	1.99	2.01	2.01	2.02	2.02
	37°F(2.8°C)	19953	19554	19456	19080	18908	2.01	2.03	2.03	2.04	2.04
	42°F(5.6°C)	21608	21176	21070	20662	20477	2.06	2.08	2.08	2.09	2.09
	44.6°F(7.0°C)	22270	21824	21715	21295	21104	2.08	2.10	2.10	2.11	2.11
	47°F(8.3°C)	23262	22797	22683	22245	22045	2.11	2.13	2.13	2.14	2.14
	52°F(11.1°C)	22920	22461	22349	21917	21720	1.88	1.90	1.90	1.90	1.91
	57°F(13.9°C)	22577	22126	22015	21589	21395	1.65	1.67	1.67	1.67	1.68
	59°F(15.0°C)	22440	21991	21881	21458	21265	1.56	1.57	1.58	1.58	1.59
	62°F(16.7°C)	22235	21790	21681	21262	21070	1.43	1.44	1.44	1.44	1.45
	64.4°F(18.0°C)	22070	21629	21521	21105	20915	1.32	1.33	1.33	1.33	1.34
	69.8°F(-21.0°C	21700	21266	21160	20751	20564	1.07	1.08	1.08	1.08	1.09
	75.2°F(24.0°C)	21330	20903	20799	20397	20213	0.82	0.83	0.83	0.83	0.84

Manufacturer reserves the right to change, at any time, specifications and designs without notice and without obligations.

Table 8 – 27K Heating Performance (Continued)

AIRFLOW (CFM)	OUTDOOR DB°F(°C)	HEATING PERFORMANCE AT INDOOR DRY BULB TEMPERATURE									
		TC: Total Heating Capacity (BTU/hr)					PI: Power Input (kW)				
		Indoor Conditions (DB °F(°C))					Indoor Conditions (DB °F(°C))				
		60.8°F (16.0°C)	68°F (20.0°C)	70°F (21.1°C)	71.6°F (22.0°C)	75.2°F (24.0°C)	60.8°F (16.0°C)	68°F (20.0°C)	70°F (21.1°C)	71.6°F (22.0°C)	75.2°F (24.0°C)
810	-22°F(-15.0°C)	22201	21757	21648	21561	21367	0.00	0.00	0.00	0.00	0.00
	-13°F(-25.0°C)	7546	7395	7358	7328	7262	1.93	1.95	1.95	1.95	1.96
	-4°F(-20.0°C)	10377	10169	10119	10078	9987	2.07	2.08	2.09	2.09	2.10
	0°F(-17.8°C)	13131	12868	12804	12753	12638	2.18	2.19	2.20	2.20	2.21
	5°F(-15.0°C)	16573	16242	16161	16096	15951	2.31	2.33	2.34	2.34	2.35
	14°F(-10.0°C)	14698	14404	14332	14274	14146	2.09	2.11	2.12	2.12	2.13
	17°F(-8.3°C)	14072	13791	13722	13667	13544	2.02	2.04	2.04	2.05	2.05
	22°F(-5.6°C)	16349	16022	15942	15878	15735	2.09	2.11	2.11	2.11	2.12
	27°F(-2.8°C)	18625	18252	18161	18088	17926	2.16	2.17	2.18	2.18	2.19
	32°F(-0.0°C)	20901	20483	20381	20299	20116	2.22	2.24	2.25	2.25	2.26
	35°F(1.7°C)	22267	21821	21712	21625	21431	2.26	2.28	2.29	2.29	2.30
	37°F(2.8°C)	23031	22570	22457	22367	22166	2.29	2.30	2.31	2.31	2.32
	42°F(5.6°C)	24941	24442	24320	24222	24004	2.34	2.36	2.37	2.37	2.38
	44.6°F(7.0°C)	25704	25190	25064	24964	24740	2.36	2.38	2.39	2.39	2.40
	47°F(8.3°C)	26850	26313	26182	26077	25842	2.40	2.42	2.42	2.43	2.44
	52°F(11.1°C)	26455	25926	25796	25693	25462	2.14	2.16	2.16	2.16	2.17
	57°F(13.9°C)	26059	25538	25411	25309	25081	1.88	1.89	1.90	1.90	1.91
	59°F(15.0°C)	25901	25383	25256	25155	24929	1.78	1.79	1.79	1.80	1.80
	62°F(16.7°C)	25664	25151	25025	24925	24700	1.62	1.63	1.64	1.64	1.65
	64.4°F(18.0°C)	25474	24965	24840	24740	24518	1.49	1.51	1.51	1.51	1.52
	69.8°F(-21.0°C	25047	24546	24423	24326	24107	1.21	1.22	1.23	1.23	1.23
	75.2°F(24.0°C)	24620	24127	24007	23911	23696	0.93	0.94	0.94	0.95	0.95
963	-22°F(-15.0°C)	25625	25112	24987	24887	24663	0.00	0.00	0.00	0.00	0.00
	-13°F(-25.0°C)	8709	8535	8492	8458	8382	2.19	2.21	2.22	2.22	2.23
	-4°F(-20.0°C)	11978	11738	11679	11633	11528	2.35	2.37	2.37	2.38	2.39
	0°F(-17.8°C)	15156	14853	14779	14720	14587	2.47	2.49	2.50	2.50	2.51
	5°F(-15.0°C)	19130	18747	18653	18579	18412	2.63	2.65	2.66	2.66	2.67
	14°F(-10.0°C)	16965	16625	16542	16476	16328	2.38	2.40	2.40	2.41	2.42
	17°F(-8.3°C)	16243	15918	15839	15775	15633	2.30	2.32	2.32	2.33	2.33
	22°F(-5.6°C)	18870	18493	18400	18327	18162	2.37	2.39	2.40	2.40	2.41
	27°F(-2.8°C)	21497	21068	20962	20878	20690	2.45	2.47	2.48	2.48	2.49
	32°F(-0.0°C)	24125	23642	23524	23430	23219	2.53	2.55	2.55	2.56	2.57
	35°F(1.7°C)	25701	25187	25061	24961	24736	2.57	2.59	2.60	2.60	2.61
	37°F(2.8°C)	26583	26051	25921	25817	25585	2.60	2.62	2.62	2.63	2.64
	42°F(5.6°C)	28787	28212	28071	27958	27707	2.66	2.68	2.69	2.69	2.70
	44.6°F(7.0°C)	29669	29076	28930	28815	28555	2.69	2.71	2.71	2.72	2.73
	47°F(8.3°C)	30992	30372	30220	30099	29828	2.72	2.75	2.75	2.76	2.77
	52°F(11.1°C)	30535	29925	29775	29656	29389	2.43	2.45	2.45	2.46	2.47
	57°F(13.9°C)	30079	29477	29330	29213	28950	2.14	2.15	2.16	2.16	2.17
	59°F(15.0°C)	29896	29298	29152	29035	28774	2.02	2.03	2.04	2.04	2.05
	62°F(16.7°C)	29622	29030	28885	28769	28510	1.84	1.86	1.86	1.86	1.87
	64.4°F(18.0°C)	29403	28815	28671	28556	28299	1.70	1.71	1.72	1.72	1.73
	69.8°F(-21.0°C	28910	28332	28190	28078	27825	1.38	1.39	1.39	1.40	1.40
	75.2°F(24.0°C)	28417	27849	27710	27599	27350	1.06	1.07	1.07	1.08	1.08

Manufacturer reserves the right to change, at any time, specifications and designs without notice and without obligations.

HEATING PERFORMANCE 36K

Table 9 – 36K Heating Performance

AIRFLOW (CFM)	OUTDOOR DB°F(°C)	HEATING PERFORMANCE AT INDOOR DRY BULB TEMPERATURE									
		TC: Total Heating Capacity (BTU/hr)					PI: Power Input (kW)				
		Indoor Conditions (DB °F(°C))					Indoor Conditions (DB °F(°C))				
		60.8°F (16.0°C)	68°F (20.0°C)	70°F (21.1°C)	71.6°F (22.0°C)	75.2°F (24.0°C)	60.8°F (16.0°C)	68°F (20.0°C)	70°F (21.1°C)	71.6°F (22.0°C)	75.2°F (24.0°C)
685	-22°F(-15.0°C)	15450	15141	15065	13775	13651	0.00	0.00	0.00	0.00	0.00
	-13°F(-25.0°C)	10909	10690	10637	9352	9268	2.36	2.38	2.38	2.39	2.40
	-4°F(-20.0°C)	13568	13296	13230	11632	11527	2.46	2.48	2.48	2.49	2.50
	0°F(-17.8°C)	16023	15702	15624	13736	13613	2.58	2.60	2.61	2.61	2.62
	5°F(-15.0°C)	19091	18710	18616	16367	16220	2.73	2.76	2.76	2.77	2.78
	14°F(-10.0°C)	20099	19697	19599	17231	17076	2.85	2.87	2.88	2.88	2.89
	17°F(-8.3°C)	20435	20026	19926	17519	17362	2.89	2.91	2.92	2.92	2.93
	22°F(-5.6°C)	21303	20877	20773	18263	18099	2.84	2.86	2.87	2.88	2.89
	27°F(-2.8°C)	22171	21728	21619	19008	18837	2.80	2.82	2.82	2.83	2.84
	32°F(-0.0°C)	23039	22579	22466	19752	19574	2.75	2.77	2.78	2.78	2.79
	35°F(1.7°C)	23560	23089	22974	20198	20017	2.72	2.74	2.75	2.76	2.77
	37°F(2.8°C)	24551	24060	23940	21048	20858	2.75	2.77	2.77	2.78	2.79
	42°F(5.6°C)	27028	26487	26355	23171	22962	2.81	2.83	2.84	2.84	2.85
	44.6°F(7.0°C)	28018	27458	27321	24020	23804	2.83	2.86	2.86	2.87	2.88
	47°F(8.3°C)	29504	28914	28770	25294	25066	2.87	2.89	2.90	2.90	2.92
	52°F(11.1°C)	29731	29136	28991	25489	25259	2.77	2.79	2.80	2.81	2.82
	57°F(13.9°C)	29958	29359	29212	25683	25452	2.67	2.70	2.70	2.71	2.72
	59°F(15.0°C)	30049	29448	29300	25761	25529	2.63	2.66	2.66	2.67	2.68
	62°F(16.7°C)	30185	29581	29433	25878	25645	2.58	2.60	2.60	2.61	2.62
	64.4°F(18.0°C)	30294	29688	29539	25971	25737	2.53	2.55	2.56	2.56	2.57
	69.8°F(-21.0°C	30539	29928	29778	26181	25945	2.42	2.44	2.45	2.45	2.46
	75.2°F(24.0°C)	30784	30168	30017	26391	26154	2.32	2.34	2.34	2.35	2.36
859	-22°F(-15.0°C)	17719	17365	17278	16488	16340	0.00	0.00	0.00	0.00	0.00
	-13°F(-25.0°C)	12268	12022	11962	11194	11093	2.62	2.64	2.65	2.65	2.66
	-4°F(-20.0°C)	15258	14953	14878	13923	13798	2.73	2.75	2.76	2.76	2.77
	0°F(-17.8°C)	18019	17659	17570	16442	16294	2.87	2.89	2.89	2.90	2.91
	5°F(-15.0°C)	21470	21041	20935	19591	19415	3.04	3.06	3.07	3.07	3.09
	14°F(-10.0°C)	22604	22151	22041	20625	20440	3.16	3.19	3.20	3.20	3.22
	17°F(-8.3°C)	22981	22522	22409	20970	20781	3.21	3.23	3.24	3.25	3.26
	22°F(-5.6°C)	23958	23478	23361	21861	21664	3.16	3.18	3.19	3.19	3.21
	27°F(-2.8°C)	24934	24435	24313	22752	22547	3.11	3.13	3.14	3.14	3.16
	32°F(-0.0°C)	25910	25392	25265	23642	23430	3.06	3.08	3.09	3.09	3.10
	35°F(1.7°C)	26496	25966	25836	24177	23959	3.03	3.05	3.06	3.06	3.07
	37°F(2.8°C)	27610	27058	26922	25193	24967	3.05	3.08	3.08	3.09	3.10
	42°F(5.6°C)	30395	29787	29638	27735	27485	3.12	3.15	3.15	3.16	3.17
	44.6°F(7.0°C)	31509	30879	30725	28751	28493	3.15	3.17	3.18	3.19	3.20
	47°F(8.3°C)	33180	32517	32354	30276	30004	3.19	3.21	3.22	3.23	3.24
	52°F(11.1°C)	33435	32767	32603	30509	30234	3.08	3.10	3.11	3.12	3.13
	57°F(13.9°C)	33691	33017	32852	30742	30465	2.97	3.00	3.00	3.01	3.02
	59°F(15.0°C)	33793	33117	32951	30835	30557	2.93	2.95	2.96	2.96	2.98
	62°F(16.7°C)	33946	33267	33100	30975	30696	2.86	2.89	2.89	2.90	2.91
	64.4°F(18.0°C)	34068	33387	33220	31086	30807	2.81	2.83	2.84	2.84	2.86
	69.8°F(-21.0°C	34344	33657	33489	31338	31056	2.69	2.72	2.72	2.73	2.74
	75.2°F(24.0°C)	34619	33927	33757	31589	31305	2.58	2.60	2.60	2.61	2.62

Manufacturer reserves the right to change, at any time, specifications and designs without notice and without obligations.

Table 9 – 36K Heating Performance (Continued)

AIRFLOW (CFM)	OUTDOOR DB°F(°C)	HEATING PERFORMANCE AT INDOOR DRY BULB TEMPERATURE									
		TC: Total Heating Capacity (BTU/hr)					PI: Power Input (kW)				
		Indoor Conditions (DB °F(°C))					Indoor Conditions (DB °F(°C))				
		60.8°F (16.0°C)	68°F (20.0°C)	70°F (21.1°C)	71.6°F (22.0°C)	75.2°F (24.0°C)	60.8°F (16.0°C)	68°F (20.0°C)	70°F (21.1°C)	71.6°F (22.0°C)	75.2°F (24.0°C)
1059	-22°F(-15.0°C)	20321	19915	19815	19736	19558	0.00	0.00	0.00	0.00	0.00
	-13°F(-25.0°C)	13796	13520	13453	13399	13278	2.91	2.94	2.94	2.95	2.96
	-4°F(-20.0°C)	17159	16816	16732	16665	16515	3.03	3.06	3.06	3.07	3.08
	0°F(-17.8°C)	20264	19859	19760	19681	19503	3.18	3.21	3.22	3.22	3.24
	5°F(-15.0°C)	24145	23662	23544	23450	23239	3.37	3.40	3.41	3.42	3.43
	14°F(-10.0°C)	25420	24911	24787	24688	24466	3.52	3.54	3.55	3.56	3.57
	17°F(-8.3°C)	25845	25328	25201	25100	24874	3.56	3.59	3.60	3.61	3.62
	22°F(-5.6°C)	26943	26404	26272	26167	25931	3.51	3.54	3.54	3.55	3.56
	27°F(-2.8°C)	28040	27480	27342	27233	26988	3.45	3.48	3.49	3.49	3.51
	32°F(-0.0°C)	29138	28556	28413	28299	28044	3.40	3.42	3.43	3.44	3.45
	35°F(1.7°C)	29797	29201	29055	28939	28678	3.36	3.39	3.40	3.40	3.42
	37°F(2.8°C)	31050	30429	30277	30156	29884	3.39	3.42	3.43	3.43	3.45
	42°F(5.6°C)	34182	33499	33331	33198	32899	3.47	3.49	3.50	3.51	3.52
	44.6°F(7.0°C)	35435	34726	34553	34415	34105	3.50	3.53	3.53	3.54	3.55
	47°F(8.3°C)	37314	36568	36385	36240	35914	3.54	3.57	3.58	3.58	3.60
	52°F(11.1°C)	37601	36849	36665	36518	36190	3.42	3.45	3.46	3.46	3.48
	57°F(13.9°C)	37888	37130	36945	36797	36466	3.30	3.33	3.33	3.34	3.35
	59°F(15.0°C)	38003	37243	37057	36908	36576	3.25	3.28	3.29	3.29	3.31
	62°F(16.7°C)	38175	37412	37225	37076	36742	3.18	3.21	3.21	3.22	3.23
	64.4°F(18.0°C)	38313	37547	37359	37209	36875	3.12	3.15	3.15	3.16	3.17
	69.8°F(-21.0°C	38623	37850	37661	37510	37173	2.99	3.02	3.02	3.03	3.04
	75.2°F(24.0°C)	38933	38154	37963	37811	37471	2.86	2.89	2.89	2.90	2.91
1226	-22°F(-15.0°C)	22853	22396	22284	22195	21995	0.00	0.00	0.00	0.00	0.00
	-13°F(-25.0°C)	15515	15205	15129	15068	14933	3.24	3.26	3.27	3.27	3.29
	-4°F(-20.0°C)	19297	18911	18817	18742	18573	3.37	3.40	3.40	3.41	3.42
	0°F(-17.8°C)	22789	22333	22222	22133	21933	3.54	3.57	3.57	3.58	3.60
	5°F(-15.0°C)	27154	26610	26477	26372	26134	3.75	3.78	3.79	3.80	3.81
	14°F(-10.0°C)	28587	28015	27875	27764	27514	3.91	3.94	3.95	3.95	3.97
	17°F(-8.3°C)	29065	28484	28341	28228	27974	3.96	3.99	4.00	4.01	4.02
	22°F(-5.6°C)	30299	29694	29545	29427	29162	3.90	3.93	3.94	3.94	3.96
	27°F(-2.8°C)	31534	30903	30749	30626	30350	3.83	3.87	3.87	3.88	3.90
	32°F(-0.0°C)	32769	32113	31953	31825	31539	3.77	3.80	3.81	3.82	3.83
	35°F(1.7°C)	33510	32839	32675	32545	32252	3.73	3.77	3.77	3.78	3.80
	37°F(2.8°C)	34919	34220	34049	33913	33608	3.77	3.80	3.81	3.81	3.83
	42°F(5.6°C)	38441	37672	37484	37334	36998	3.85	3.88	3.89	3.90	3.91
	44.6°F(7.0°C)	39850	39053	38858	38702	38354	3.89	3.92	3.92	3.93	3.95
	47°F(8.3°C)	41964	41124	40919	40755	40388	3.94	3.97	3.98	3.98	4.00
	52°F(11.1°C)	42286	41441	41233	41068	40699	3.80	3.83	3.84	3.85	3.86
	57°F(13.9°C)	42609	41757	41548	41382	41009	3.67	3.70	3.70	3.71	3.73
	59°F(15.0°C)	42738	41883	41674	41507	41134	3.61	3.64	3.65	3.66	3.67
	62°F(16.7°C)	42932	42073	41863	41695	41320	3.53	3.56	3.57	3.58	3.59
	64.4°F(18.0°C)	43086	42225	42014	41846	41469	3.47	3.50	3.51	3.51	3.53
	69.8°F(-21.0°C	43435	42566	42353	42184	41804	3.33	3.35	3.36	3.37	3.38
	75.2°F(24.0°C)	43783	42908	42693	42522	42140	3.18	3.21	3.21	3.22	3.23

HEATING PERFORMANCE 48K

Table 10 – 48K Heating Performance

AIRFLOW (CFM)	OUTDOOR DB°F(°C)	HEATING PERFORMANCE AT INDOOR DRY BULB TEMPERATURE									
		TC: Total Heating Capacity (BTU/hr)					PI: Power Input (kW)				
		Indoor Conditions (DB °F(°C))					Indoor Conditions (DB °F(°C))				
		60.8°F (16.0°C)	68°F (20.0°C)	70°F (21.1°C)	71.6°F (22.0°C)	75.2°F (24.0°C)	60.8°F (16.0°C)	68°F (20.0°C)	70°F (21.1°C)	71.6°F (22.0°C)	75.2°F (24.0°C)
825	-22°F(-15.0°C)	21126	20704	20600	16426	16279	0.00	0.00	0.00	0.00	0.00
	-13°F(-25.0°C)	13586	13314	13247	10157	10066	2.69	2.71	2.72	2.72	2.74
	-4°F(-20.0°C)	23444	22975	22860	17527	17370	3.14	3.17	3.17	3.18	3.19
	0°F(-17.8°C)	26233	25708	25579	19612	19436	3.26	3.28	3.29	3.30	3.31
	5°F(-15.0°C)	29719	29124	28979	22219	22019	3.40	3.43	3.44	3.44	3.46
	14°F(-10.0°C)	32301	31655	31497	24149	23932	3.34	3.36	3.37	3.38	3.39
	17°F(-8.3°C)	33162	32499	32336	24793	24570	3.31	3.34	3.35	3.35	3.37
	22°F(-5.6°C)	33307	32640	32477	24901	24677	3.23	3.26	3.26	3.27	3.28
	27°F(-2.8°C)	33451	32782	32618	25009	24784	3.15	3.18	3.18	3.19	3.20
	32°F(-0.0°C)	33595	32923	32759	25117	24891	3.07	3.10	3.10	3.11	3.12
	35°F(1.7°C)	33682	33008	32843	25182	24955	3.02	3.05	3.05	3.06	3.07
	37°F(2.8°C)	35287	34581	34409	26382	26144	3.06	3.08	3.09	3.10	3.11
	42°F(5.6°C)	39301	38515	38322	29382	29118	3.15	3.17	3.18	3.19	3.20
	44.6°F(7.0°C)	40906	40088	39887	30583	30307	3.19	3.21	3.22	3.22	3.24
	47°F(8.3°C)	43314	42448	42236	32383	32091	3.24	3.27	3.27	3.28	3.29
	52°F(11.1°C)	43045	42184	41973	32181	31892	3.02	3.04	3.05	3.05	3.06
	57°F(13.9°C)	42775	41920	41710	31980	31692	2.79	2.81	2.82	2.83	2.84
	59°F(15.0°C)	42667	41814	41605	31899	31612	2.70	2.72	2.73	2.73	2.75
	62°F(16.7°C)	42505	41655	41447	31778	31492	2.57	2.59	2.59	2.60	2.61
	64.4°F(18.0°C)	42376	41529	41321	31682	31397	2.46	2.48	2.48	2.49	2.50
	69.8°F(-21.0°C	42085	41243	41037	31464	31181	2.22	2.23	2.24	2.24	2.25
	75.2°F(24.0°C)	41794	40958	40753	31246	30965	1.97	1.99	1.99	2.00	2.01
1038	-22°F(-15.0°C)	23409	22940	22826	20342	20159	0.00	0.00	0.00	0.00	0.00
	-13°F(-25.0°C)	14761	14466	14393	12578	12465	3.17	3.19	3.20	3.20	3.22
	-4°F(-20.0°C)	25472	24963	24838	21705	21510	3.69	3.72	3.73	3.74	3.75
	0°F(-17.8°C)	28502	27932	27792	24287	24069	3.83	3.86	3.87	3.88	3.89
	5°F(-15.0°C)	32290	31644	31486	27515	27267	4.00	4.04	4.04	4.05	4.07
	14°F(-10.0°C)	35096	34394	34222	29906	29637	3.92	3.96	3.96	3.97	3.99
	17°F(-8.3°C)	36031	35311	35134	30703	30426	3.90	3.93	3.94	3.94	3.96
	22°F(-5.6°C)	36188	35464	35287	30836	30559	3.80	3.83	3.84	3.85	3.86
	27°F(-2.8°C)	36345	35618	35440	30970	30691	3.71	3.74	3.74	3.75	3.77
	32°F(-0.0°C)	36502	35772	35593	31104	30824	3.61	3.64	3.65	3.66	3.67
	35°F(1.7°C)	36596	35864	35685	31184	30903	3.56	3.58	3.59	3.60	3.61
	37°F(2.8°C)	38340	37573	37385	32670	32376	3.60	3.63	3.63	3.64	3.66
	42°F(5.6°C)	42701	41847	41637	36386	36058	3.71	3.74	3.74	3.75	3.77
	44.6°F(7.0°C)	44445	43556	43338	37872	37531	3.75	3.78	3.79	3.79	3.81
	47°F(8.3°C)	47061	46120	45890	40102	39741	3.81	3.84	3.85	3.86	3.87
	52°F(11.1°C)	46769	45833	45604	39852	39493	3.55	3.58	3.58	3.59	3.61
	57°F(13.9°C)	46476	45546	45318	39603	39246	3.28	3.31	3.32	3.32	3.34
	59°F(15.0°C)	46359	45431	45204	39503	39147	3.18	3.20	3.21	3.22	3.23
	62°F(16.7°C)	46183	45259	45033	39353	38999	3.02	3.04	3.05	3.06	3.07
	64.4°F(18.0°C)	46042	45121	44896	39233	38880	2.89	2.92	2.92	2.93	2.94
	69.8°F(-21.0°C	45726	44812	44587	38964	38613	2.61	2.63	2.63	2.64	2.65
	75.2°F(24.0°C)	45410	44502	44279	38694	38346	2.32	2.34	2.35	2.35	2.36

Manufacturer reserves the right to change, at any time, specifications and designs without notice and without obligations.

Table 10 – 48K Heating Performance (Continued)

AIRFLOW (CFM)	OUTDOOR DB°F(°C)	HEATING PERFORMANCE AT INDOOR DRY BULB TEMPERATURE									
		TC: Total Heating Capacity (BTU/hr)					PI: Power Input (kW)				
		Indoor Conditions (DB °F(°C))					Indoor Conditions (DB °F(°C))				
		60.8°F (16.0°C)	68°F (20.0°C)	70°F (21.1°C)	71.6°F (22.0°C)	75.2°F (24.0°C)	60.8°F (16.0°C)	68°F (20.0°C)	70°F (21.1°C)	71.6°F (22.0°C)	75.2°F (24.0°C)
1324	-22°F(-15.0°C)	25937	25419	25292	25190	24964	0.00	0.00	0.00	0.00	0.00
	-13°F(-25.0°C)	16038	15717	15639	15576	15436	3.73	3.76	3.76	3.77	3.79
	-4°F(-20.0°C)	27676	27122	26987	26879	26637	4.35	4.38	4.39	4.40	4.42
	0°F(-17.8°C)	30968	30349	30197	30076	29806	4.51	4.55	4.55	4.56	4.58
	5°F(-15.0°C)	35084	34382	34210	34073	33766	4.71	4.75	4.76	4.77	4.79
	14°F(-10.0°C)	38132	37370	37183	37034	36701	4.62	4.65	4.66	4.67	4.69
	17°F(-8.3°C)	39148	38365	38174	38021	37679	4.58	4.62	4.63	4.64	4.66
	22°F(-5.6°C)	39319	38532	38340	38186	37843	4.47	4.51	4.52	4.53	4.55
	27°F(-2.8°C)	39489	38700	38506	38352	38007	4.36	4.40	4.41	4.41	4.43
	32°F(-0.0°C)	39660	38867	38672	38517	38171	4.25	4.28	4.29	4.30	4.32
	35°F(1.7°C)	39762	38967	38772	38617	38269	4.18	4.22	4.22	4.23	4.25
	37°F(2.8°C)	41657	40824	40620	40457	40093	4.23	4.27	4.28	4.28	4.30
	42°F(5.6°C)	46395	45467	45240	45059	44653	4.36	4.39	4.40	4.41	4.43
	44.6°F(7.0°C)	48290	47324	47088	46899	46477	4.41	4.45	4.45	4.46	4.48
	47°F(8.3°C)	51133	50110	49860	49660	49213	4.49	4.52	4.53	4.54	4.56
	52°F(11.1°C)	50815	49798	49549	49351	48907	4.17	4.21	4.22	4.22	4.24
	57°F(13.9°C)	50497	49487	49239	49042	48601	3.86	3.89	3.90	3.91	3.93
	59°F(15.0°C)	50369	49362	49115	48919	48478	3.74	3.77	3.78	3.78	3.80
	62°F(16.7°C)	50178	49175	48929	48733	48295	3.55	3.58	3.59	3.60	3.61
	64.4°F(18.0°C)	50026	49025	48780	48585	48148	3.40	3.43	3.44	3.44	3.46
	69.8°F(-21.0°C	49682	48688	48445	48251	47817	3.07	3.09	3.10	3.11	3.12
	75.2°F(24.0°C)	49338	48352	48110	47918	47486	2.73	2.75	2.76	2.77	2.78
1481	-22°F(-15.0°C)	28181	27618	27480	27370	27123	0.00	0.00	0.00	0.00	0.00
	-13°F(-25.0°C)	17426	17077	16992	16924	16771	4.38	4.42	4.43	4.44	4.45
	-4°F(-20.0°C)	30070	29469	29321	29204	28941	5.11	5.16	5.17	5.18	5.20
	0°F(-17.8°C)	33647	32974	32809	32678	32384	5.30	5.35	5.36	5.37	5.39
	5°F(-15.0°C)	38119	37356	37170	37021	36688	5.54	5.59	5.60	5.61	5.63
	14°F(-10.0°C)	41431	40603	40400	40238	39876	5.43	5.47	5.49	5.50	5.52
	17°F(-8.3°C)	42535	41685	41476	41310	40939	5.39	5.44	5.45	5.46	5.48
	22°F(-5.6°C)	42721	41866	41657	41490	41117	5.26	5.30	5.32	5.33	5.35
	27°F(-2.8°C)	42906	42048	41837	41670	41295	5.13	5.17	5.18	5.19	5.21
	32°F(-0.0°C)	43091	42229	42018	41850	41473	5.00	5.04	5.05	5.06	5.08
	35°F(1.7°C)	43202	42338	42126	41958	41580	4.92	4.96	4.97	4.98	5.00
	37°F(2.8°C)	45261	44356	44134	43958	43562	4.98	5.02	5.03	5.04	5.06
	42°F(5.6°C)	50409	49401	49154	48957	48516	5.13	5.17	5.18	5.19	5.21
	44.6°F(7.0°C)	52468	51419	51162	50957	50498	5.19	5.23	5.24	5.25	5.27
	47°F(8.3°C)	55557	54446	54173	53957	53471	5.28	5.32	5.33	5.34	5.36
	52°F(11.1°C)	55211	54107	53836	53621	53138	4.91	4.95	4.96	4.97	4.99
	57°F(13.9°C)	54865	53768	53499	53285	52806	4.55	4.58	4.59	4.60	4.62
	59°F(15.0°C)	54727	53633	53364	53151	52673	4.40	4.43	4.44	4.45	4.47
	62°F(16.7°C)	54520	53429	53162	52949	52473	4.18	4.21	4.22	4.23	4.25
	64.4°F(18.0°C)	54354	53267	53000	52788	52313	4.00	4.04	4.04	4.05	4.07
	69.8°F(-21.0°C	53980	52901	52636	52426	51954	3.61	3.64	3.65	3.65	3.67
	75.2°F(24.0°C)	53607	52535	52272	52063	51595	3.21	3.24	3.25	3.25	3.27

APPLICATION DATA

UNIT SELECTION

When selecting a variable speed system, match the system capacity range to the anticipated load range. Since a variable speed system can accommodate a wide range of loads it is important to understand the percentage of time that the system will be required to run at both the maximum and the minimum load points. This differential is most evident when a residential application is compared with a commercial application.

Generally there is more load diversification in the residential application (shifting from a low load to a high load). The commercial application tends to be steadier during the normal day time hours, and will drop to low load levels after normal business hours. If it is anticipated that the system needs to run at the maximum load point for the majority of the time, the next larger system capacity should be selected.

The Application table below provides a guideline for selecting the appropriate size for the application.

NOTE: Refer to the most current version of the compatibility chart for a list of the approved indoor units for each outdoor size.

Safety Notice: When pairing indoor units with multi-zone outdoor systems, ensure that all matched indoor units are equipped with an integrated refrigerant leak detection sensor. This sensor is critical for compliance with safety standards and enables the system to automatically shut down in the event of a refrigerant leak, preventing hazardous conditions and maintaining system integrity.

INDOOR UNIT COMBINATIONS

Indoor Unit Combination for 18K

Two Zones
12+12
9+9
9+12

Indoor Unit Combination for 27K

Two Zones		Three Zones	Four Zones
9+9	9+24	9+9+9	9+9+9+9
9+12	12+12	9+9+12	
9+18	12+18	9+9+18	
	12+24	9+12+12	
	18+18	12+12+12	

Indoor Unit Combination for 36K

Two Zones	Three Zones		Four Zones	Five Zones
9+9	9+9+9	12+12+18	9+9+9+12	9+9+9+9+9
9+12	9+9+12	12+12+24	9+9+9+18	9+9+9+9+12
9+18	9+9+18	12+18+18	9+9+12+12	
9+24	9+9+24		9+9+12+18	
12+12	9+12+12		9+12+12+12	
12+18	9+12+18		12+12+12+12	
12+24	9+12+24		9+9+9+9	
18+18	9+18+18			
	12+12+12			

Indoor Unit Combination for 48K

Two Zones		Three Zones		Four Zones		Five Zones	Six Zones
12+12	24+24	9+9+9	9+24+24	9+9+9+12	9+18+18+18	9+9+9+9+9	9+9+9+9+9+9
12+18	18+18	9+9+12	12+12+12	9+9+9+18	12+12+12+12	9+9+9+9+12	9+9+9+9+9+12
12+24	18+24	9+9+18	12+12+18	9+9+9+24	12+12+12+18	9+9+9+9+18	9+9+9+9+9+18
9+18		9+9+24	12+12+24	9+9+9+9	12+12+12+24	9+9+9+9+24	9+9+9+9+12+12
9+24		9+12+12	12+18+18	9+9+12+12	12+12+18+18	9+9+9+12+12	9+9+9+12+12+12
		9+12+18	12+18+24	9+9+12+18		9+9+9+12+18	
		9+12+24	12+24+24	9+9+12+24		9+9+9+12+24	
		9+18+18	18+18+18	9+9+18+18		9+9+9+18+18	
		9+18+24	18+18+24	9+9+18+24		9+9+12+12+12	
				9+12+12+12		9+9+12+12+18	
				9+12+12+18		9+12+12+12+12	
				9+12+12+24		9+12+12+12+18	
				9+12+18+18		12+12+12+12+12	
				9+12+18+24			

UNIT MOUNTING (OUTDOOR)

Refer to the unit's installation instructions for further details.

Support – A location which can bear the weight of outdoor unit.

See "SPECIFICATIONS" on page 9. For dimensions and weights see"Dimensions and Weights" on page 5.

Unit Leveling – For reliable operation, units should be level in all planes.

Clearances – Minimum clearances (See Fig. 7 — on page 8 and See Fig. 8 — on page 9), must be provided for airflow. The outdoor units are designed for free-blow applications. Air inlets and outlets should not be restricted.

Unit location – A location which is convenient to installation and not exposed to strong wind.

NOTE: Do not install the indoor or outdoor units in a location with special environmental conditions. For those applications, contact your sales representative.

System Operating Conditions

	COOLING	HEATING
Outdoor DB	-22 / 122°F (30/ 50°C)	-22 / 75°F (-30 / 24°C)

Metering Devices

The outdoor unit has multiple electronic expansion valves to manage the refrigerant flow to the different indoor fan coils connected to that unit.

WIRING

All wires must be sized per NEC (National Electrical Code) or CEC (Canadian Electrical Code) and local codes. Use Electrical Data table MCA (minimum circuit amps) and MOCP (maximum over current protection) to correctly size the wires and the disconnect fuse or breakers respectively.

RECOMMENDED CONNECTION METHOD FOR POWER AND COMMUNICATION WIRING:

The main power is supplied to the outdoor unit. The field supplied 14/3 stranded wire with ground with a 600 volt insulation rating, power/communication wiring from the outdoor unit to indoor unit consists of four (4) wires and provides the power for the indoor unit. Two wires are line voltage AC power, one is communication wiring (S) and the other is a ground wire. Wiring between indoor and outdoor unit is polarity sensitive. The use of BX wire is **NOT** recommended.

If installed in a high Electromagnetic field (EMF) area and communication issues exists, a 14/2 stranded shielded wire can be used to replace L2 and (S) between outdoor unit and indoor unit landing the shield onto ground in the outdoor unit only.

CABLE	CABLE SIZE	REMARKS
Connection Cable	14AWG	3 wire + Ground 1Φ 208/230 V

WARNING

EQUIPMENT DAMAGE HAZARD

Failure to follow this caution may result in equipment damage or improper operation.

Wires should be sized based on NEC and local codes.

WARNING

EQUIPMENT DAMAGE HAZARD

Failure to follow this caution may result in equipment damage or improper operation.

Be sure to comply with local codes while running wire from the indoor unit to the outdoor unit.

Every wire must be connected firmly. Loose wiring may cause the terminal to overheat or result in unit malfunction. A fire hazard may also exist. Ensure all wiring is tightly connected.

No wire should touch the refrigerant tubing, compressor or any moving parts.

Disconnecting means must be provided and shall be located within sight and readily accessible from the air conditioner.

Connecting cable with conduit shall be routed through the hole in the conduit panel.

PIPING REQUIREMENTS

Important: Both refrigerant lines must be insulated separately.

The minimum refrigerant line length between the indoor and outdoor units is 10 ft. (3 m). The following lengths are allowed. The following **Refrigerant Piping Table** lists the pipe sizes for the outdoor unit. For the indoor unit pipe sizes refer to the indoor unit installation instructions.

Refrigerant Piping:

Line sets to be sized based on the connection size of the indoor unit. Each pipe should be insulated individually .

OUTDOOR MODEL			37MTRAQ18CA3	37MTRAQ27DA3	37MTRAQ36EA3	37MTRAQ48FA3
PIPING AND REFRIGERANT INFORMATION	Refrigerant Type	Type	R454B	R454B	R454B	R454B
	Charge Amount	lb. (kg)	3.86(1.75)	5.29(2.4)	7.54(3.42)	9.26(4.2)
	Liquid Pipe (size - connection type)	In (mm)	3x1/4in (3x6.35mm)	4x1/4in (4x6.35mm)	5x1/4in (5x6.35mm)	6x1/4in (5x6.35mm)
	Suction Pipe (size - connection type)	In (mm)	3x3/8in (3x9.52mm)	3x3/8in+1x1/2in (3x9.52mm+1x12.7 mm)	3x3/8in+2x1/2in (3x9.52mm+2x12.7 mm)	4x3/8in+2x1/2in (4x9.52mm+2x12.7 mm)
	Min. Piping Length per each indoor unit	ft. (m)	9.8 (3)	9.8 (3)	9.8 (3)	9.8 (3)
	Standard Piping Length per each indoor unit	ft. (m)	24.6 (7.5)	24.6 (7.5)	24.6 (7.5)	24.6 (7.5)
	Max. outdoor-indoor height difference (OU higher than IU)	ft. (m)	49.21(15)	49.21(15)	49.21(15)	49.21(15)
	Max. outdoor-indoor height difference (IU higher than OU)	ft. (m)	49.21(15)	49.21(15)	49.21(15)	49.21(15)
	Max. Piping Length with no additional refrig-erant charge per System (Standard Piping length x No. of Zones)	ft. (m)	73.8 (22.5)	98.4(30)	123(37.5)	147.6(45)
	Additional refrigerant charge (Standard Piping length X # of Zones)	Oz/ft (g/m)	0.16(15)	0.16(15)	0.16(15)	0.16(15)
	Max. Length per each indoor unit	ft. (m)	98.4(30)	114.8(35)	114.8(35)	114.8(35)
	Total Maximum Piping Length per system	ft. (m)	196.9(60)	262.5(80)	262.5(80)	328(100)
	Number of IDU	ft. (m)	3	4	5	6

General Guidelines:

1. The outdoor units are shipped with a full charge of R-454B refrigerant. For runs over the Maximum Piping Length with no additional refrigerant charge per system, consult “Refrigerant Piping:” on page 42 for proper charge adjustments.
2. Refrigerant lines should not be buried in the ground. If it is necessary to bury the lines, do not bury more than 36 inches (914 mm). Provide a minimum of 6 inch (152 mm) vertical rise to the service valves to prevent refrigerant migration.
3. Both lines must be insulated. Use a minimum of ½-inch (12.7 mm) thick insulation. Closed-cell insulation is recommended in all long-line applications.
4. Special consideration should be given to isolating the interconnecting tubing from the building structure. Isolate the tubing so vibration or noise does not transmit into the structure.

Long-Line Applications

- No change in line sizing is required.

NOTE: If the calculation results in a negative number, no additional refrigerant is required.

Drain Connections

Install drains that meet the local sanitation codes.

Control System

The **37MTRAQ** unit is equipped with a microprocessor control to operate the system and give optimum levels of comfort and operating efficiency. There are microprocessor boards and thermistors located in both the indoor and outdoor units. The thermistors monitor the system operation and control the operating mode.

Sequence of Operation

NOTE: Simultaneous heating and cooling is not allowed.

The **HEATING** mode is the system's primary mode and the mode controls the operation mode for the remaining indoor units connected to the same outdoor unit. If any unit in the system is set to the **HEATING** mode, the system switches to heat. If any unit is in the **COOLING** mode, while any unit in the system is set to the **HEATING** mode, the units set to **COOLING** enter the **CONFLICT** mode and an error message appears on the units in the **COOLING** mode.

All units must be set to the **COOLING** or **FAN** mode for the system to cool. When a unit is set to the **COOL**, **HEAT** or **DRY** mode, the electronic expansion valve is initialized first (closed) and then it is opened to a preset position.

SUPERHEAT heating for each fan coil (the ones that are energized) is monitored and the position of the electronic expansion valve is adjusted to ensure that each fan coil gets the appropriate amount of refrigerant to maintain the required superheat. In the **COOLING** mode, after the set point is satisfied, the electronic expansion valve remains open for a specified time to ensure the system pressures equalize. In the **HEATING** mode, after the set point is satisfied, the electronic expansion valve remains open to ensure proper oil flow back and to maintain a low pressure.

When the system is set for the **COOL**, **HEAT** or **DRY** mode, the compressor speed is varied by comparing the indoor air temperature with the set point and continuously adjusting the compressor speed (to keep the compressor running as long as possible) in an effort to maintain the greatest comfort possible.

The indoor fan can run in either the **MANUAL** or **AUTO** mode. When the fan runs in the **AUTO** mode, the speed is determined by comparing the room temperature to the set point.

For High Walls, when the set point is satisfied, the fan speed is reduced. The Fan Coils are not de-energized.

When the unit goes through the defrost cycle, the indoor fans are de-energized and the refrigerant is circulated through all the fan coils (even if they are off or were in the standby mode before the defrost cycle) to maximize the heat transfer surface area available for defrost operation.

⚠ WARNING

AUTO mode is recommended for use on single zone applications **ONLY**. **AUTO** mode is **NOT** recommended for use on multi-zone applications.

Using **AUTO** changeover on multi-zone applications could set an indoor unit to **Standby** mode, indicated as (**--**) on the display, and turn off the indoor unit until all the indoor units are on the same mode (**COOLING** or **HEATING**).

HEATING mode is the priority for the system. Simultaneous **HEATING** and **COOLING** is not allowed.

AIRFLOW DATA

UNIT SIZE	18K	27K	36K	48K
	(208/230V)			
OUTDOOR (CFM)	1764.71	2129.41	2147.06	4500.00

SOUND PRESSURE

SYSTEM SIZE		18K	27K	36K	48K
		(208/230 V)			
Outdoor Sound Pressure Level	dB(A)	59	62	62.5	62

OUTDOOR UNIT SOUND PRESSURE TEST CONDITIONS

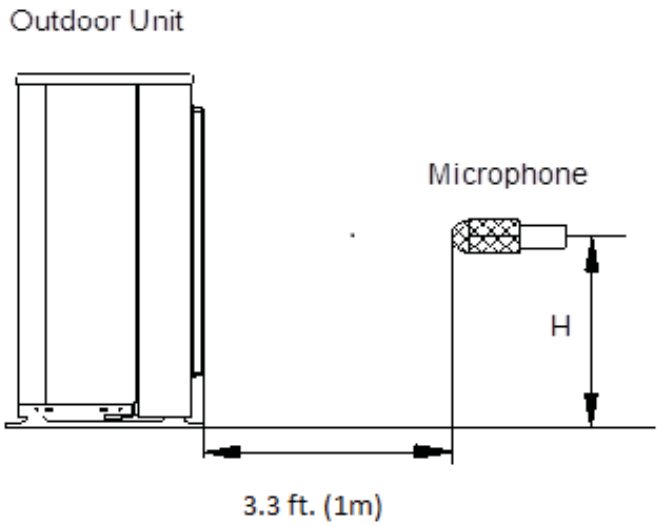

Fig. 9 — Outdoor Unit Sound Pressure Test Conditions

NOTE: H = 0.5 x Height of the outdoor unit.

	INDOOR CONDITION		OUTDOOR CONDITION	
	DB	WB	DB	WB
COOLING	80.6°F (27°C)	66.2°F (19°C)	95°F (35°C)	75.2°F (24°C)
HEATING	68°F (20°C)	59°F (15°C)	44.6°F (7°C)	42.8°F (6°C)

ELECTRICAL DATA

ELECTRICAL DATA					
OUTDOOR UNIT		18K	27K	36K	48K
		(208/230V)	(208/230V)	(208/230V)	(208/230V)
Minimum Circuit Ampacity (MCA)	A	16	23	30.5	40
Maximum Overcurrent Protection (MOP)	A	20	25	35	45
Voltage-Phase-Frequency *	208/230-1-60				
Max – Min Voltage Range	253-187				
COOLING (WITH AF HIGH WALL IDU)					
Running current	(A)	6.9	11.0	17.0	21.0
Power consumption	(W)	1539	2514	3789	4800
HEATING (WITH AF HIGH WALL IDU)					
Running current range	(A)	7.0	10.3	17.1	19.5
Power consumption	(W)	1552	2345	3908	4400

*Permissible limits of the voltage range at which the unit operates satisfactorily.

LEGEND

FLA - Full Load Amps
MCA - Minimum Circuit Amps
MOCP - Maximum Over Current Protection
RLA - Rated Load Amps

REFRIGERANT CYCLE DIAGRAMS

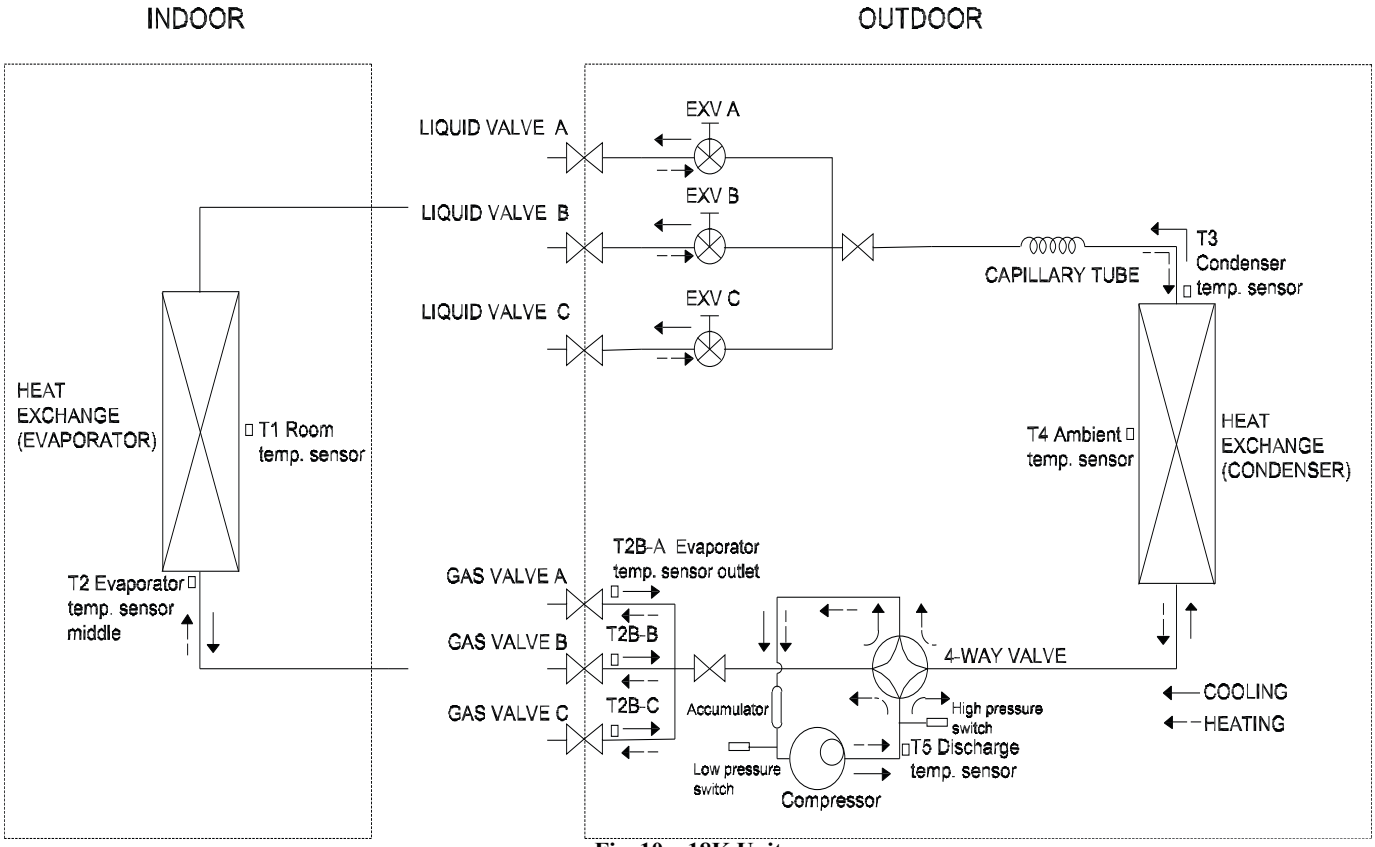

Fig. 10 – 18K Unit

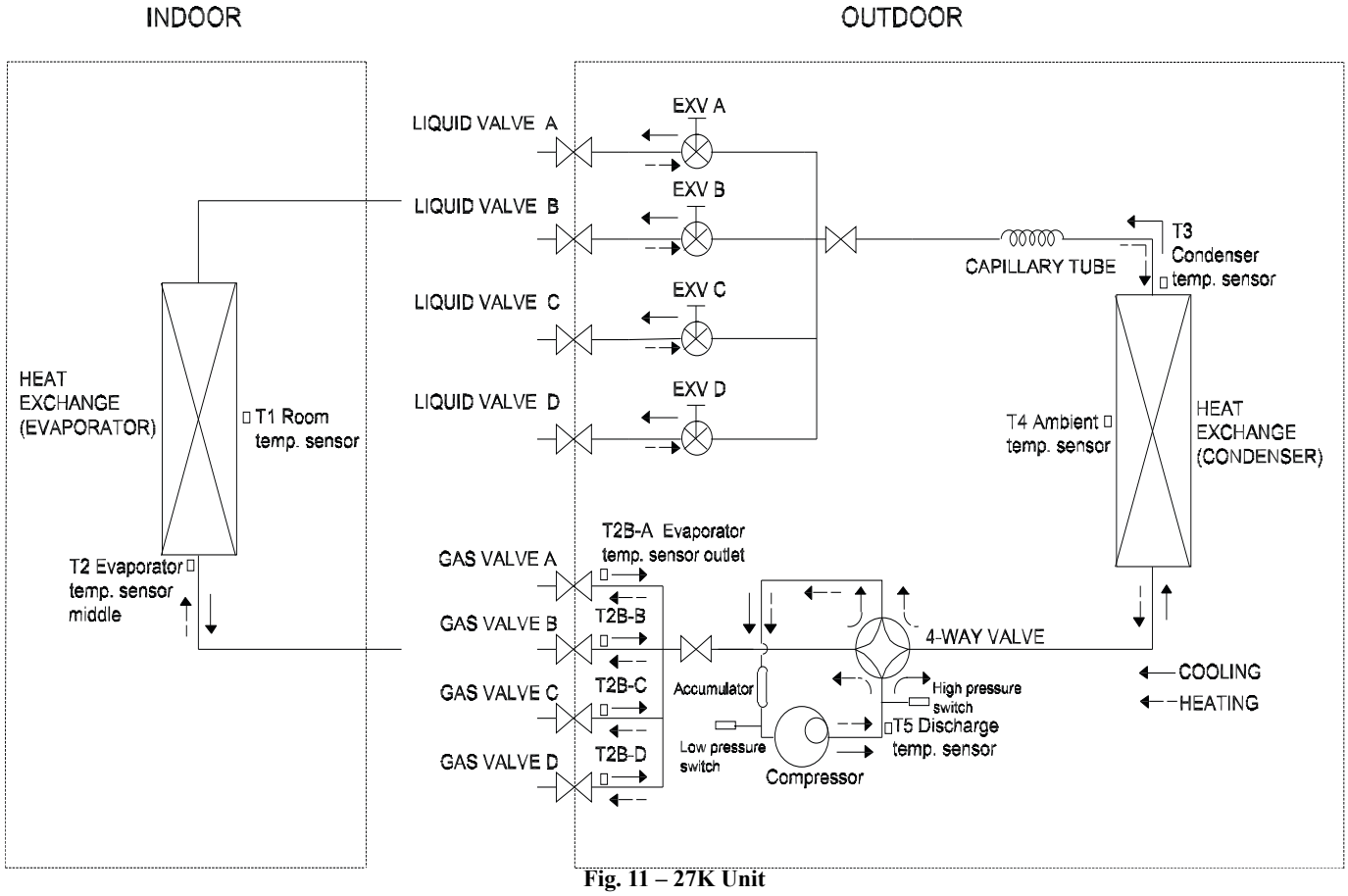

Fig. 11 – 27K Unit

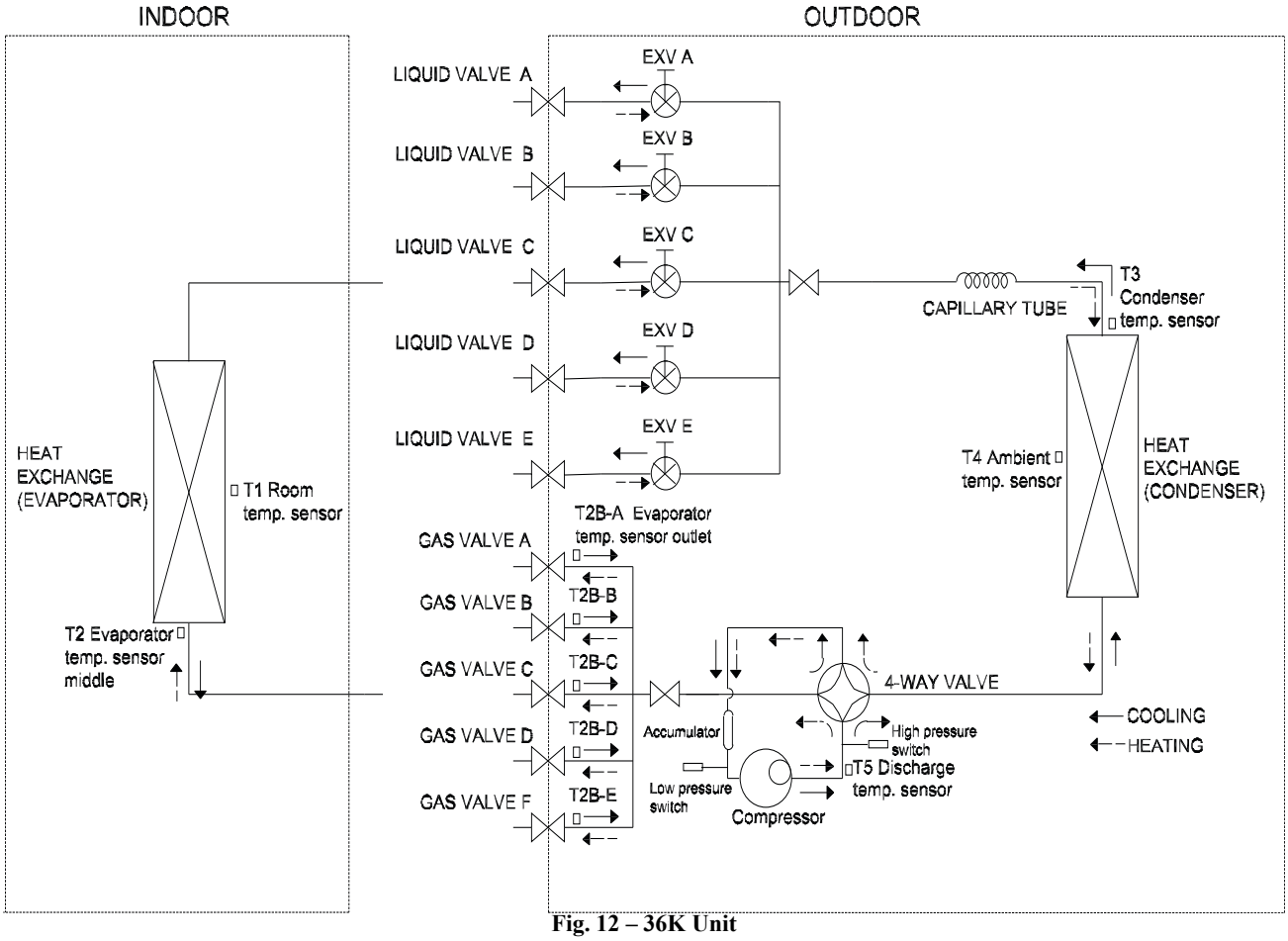

Fig. 12 – 36K Unit

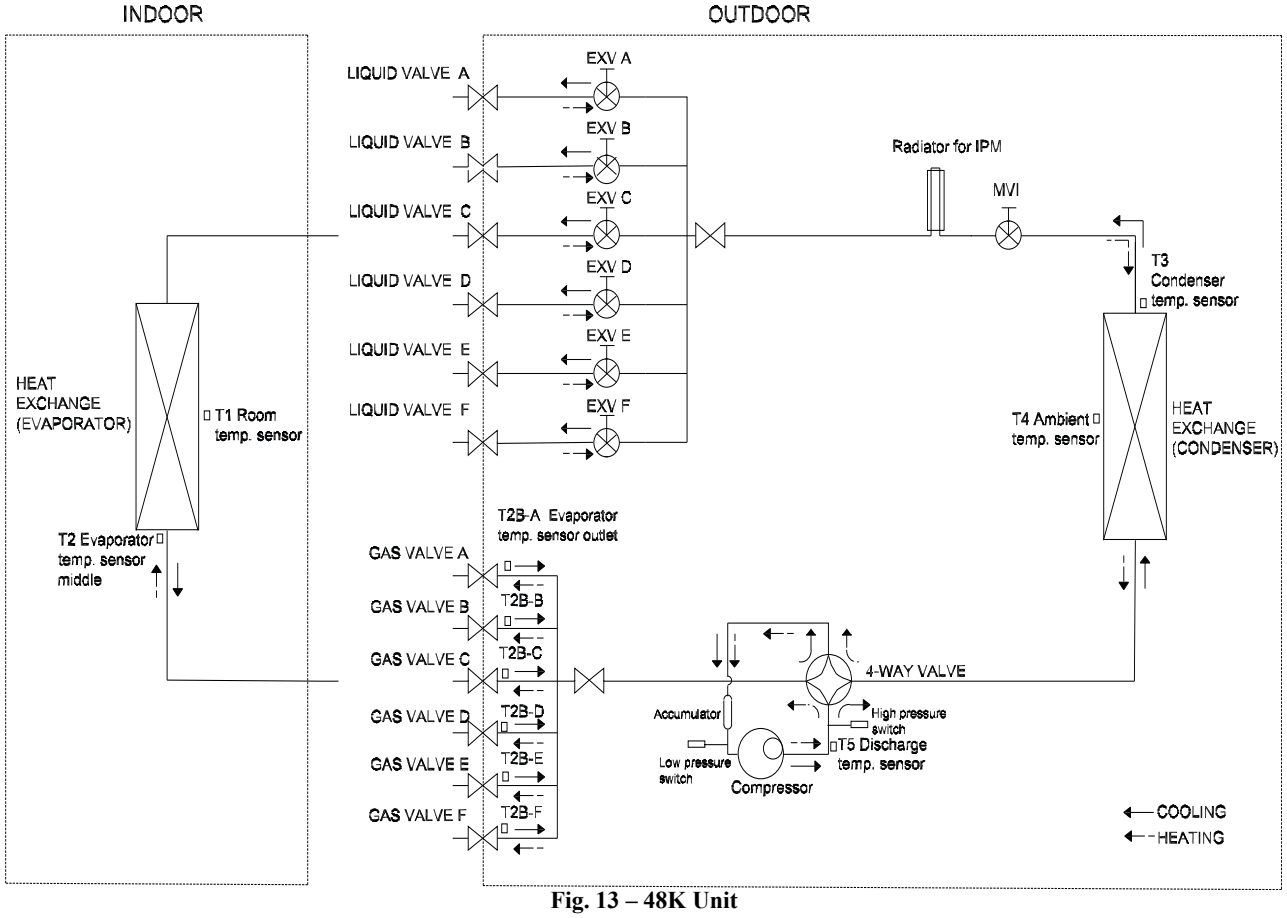

Fig. 13 – 48K Unit

WIRING DIAGRAMS

18K

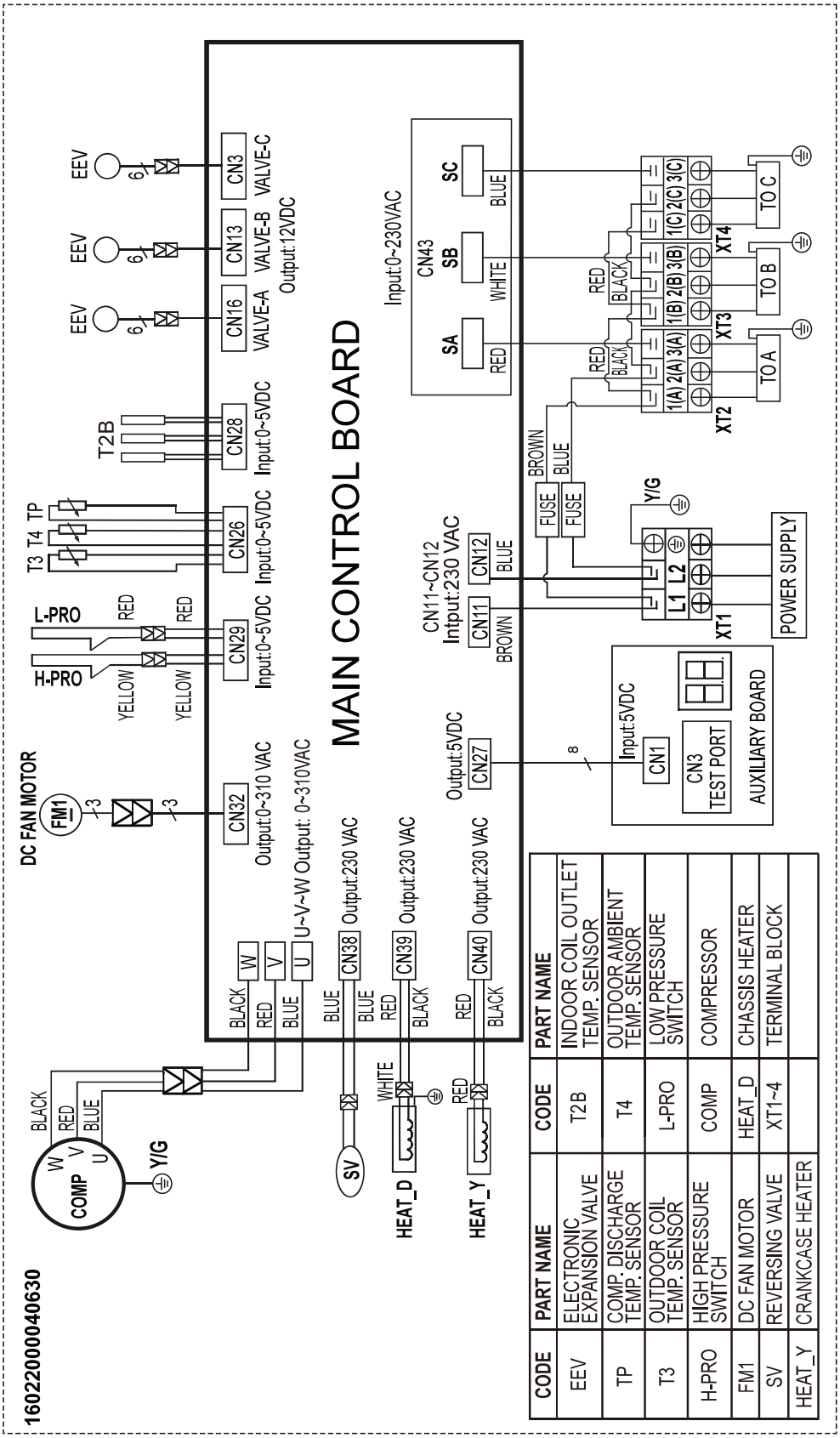

CODE	PART NAME	CODE	PART NAME
EEV	ELECTRONIC EXPANSION VALVE	T2B	INDOOR COIL OUTLET TEMP. SENSOR
TP	COMP. DISCHARGE TEMP. SENSOR	T4	OUTDOOR AMBIENT TEMP. SENSOR
T3	OUTDOOR COIL TEMP. SENSOR	L-PRO	LOW PRESSURE SWITCH
H-PRO	HIGH PRESSURE SWITCH	COMP	COMPRESSOR
FM1	DC FAN MOTOR	HEAT_D	CHASSIS HEATER
SV	REVERSING VALVE	XT1~4	TERMINAL BLOCK
HEAT_Y	CRANKCASE HEATER		

Fig. 14 — Wiring Diagram 18K

WIRING DIAGRAMS (CONT)

27K

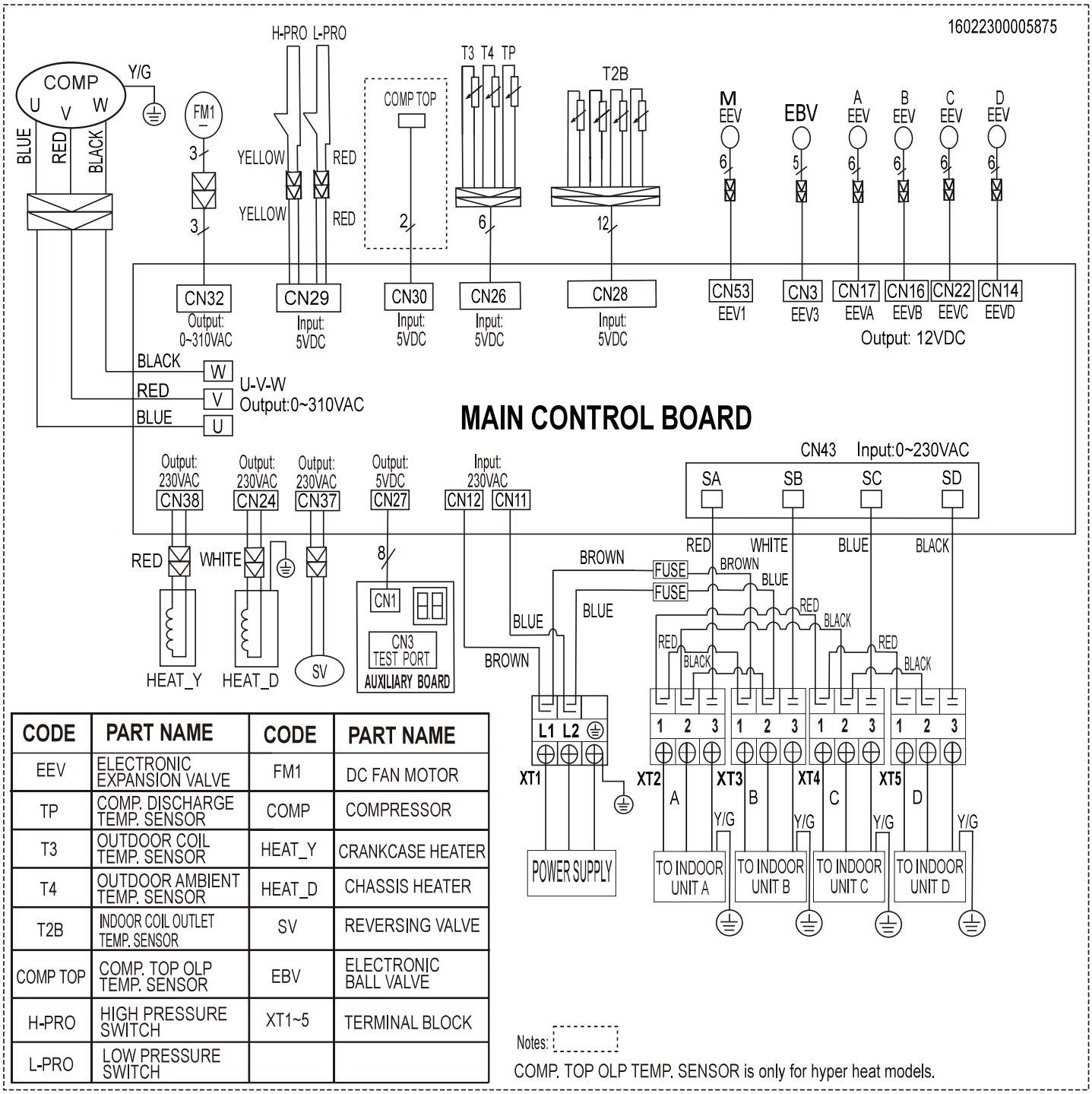

CODE	PART NAME	CODE	PART NAME
EEV	ELECTRONIC EXPANSION VALVE	FM1	DC FAN MOTOR
TP	COMP. DISCHARGE TEMP. SENSOR	COMP	COMPRESSOR
T3	OUTDOOR COIL TEMP. SENSOR	HEAT_Y	CRANKCASE HEATER
T4	OUTDOOR AMBIENT TEMP. SENSOR	HEAT_D	CHASSIS HEATER
T2B	INDOOR COIL OUTLET TEMP. SENSOR	SV	REVERSING VALVE
COMP TOP	COMP. TOP OLP TEMP. SENSOR	EBV	ELECTRONIC BALL VALVE
H-PRO	HIGH PRESSURE SWITCH	XT1~5	TERMINAL BLOCK
L-PRO	LOW PRESSURE SWITCH		

Fig. 15 — Wiring Diagram 27K

WIRING DIAGRAMS (CONT)

36K

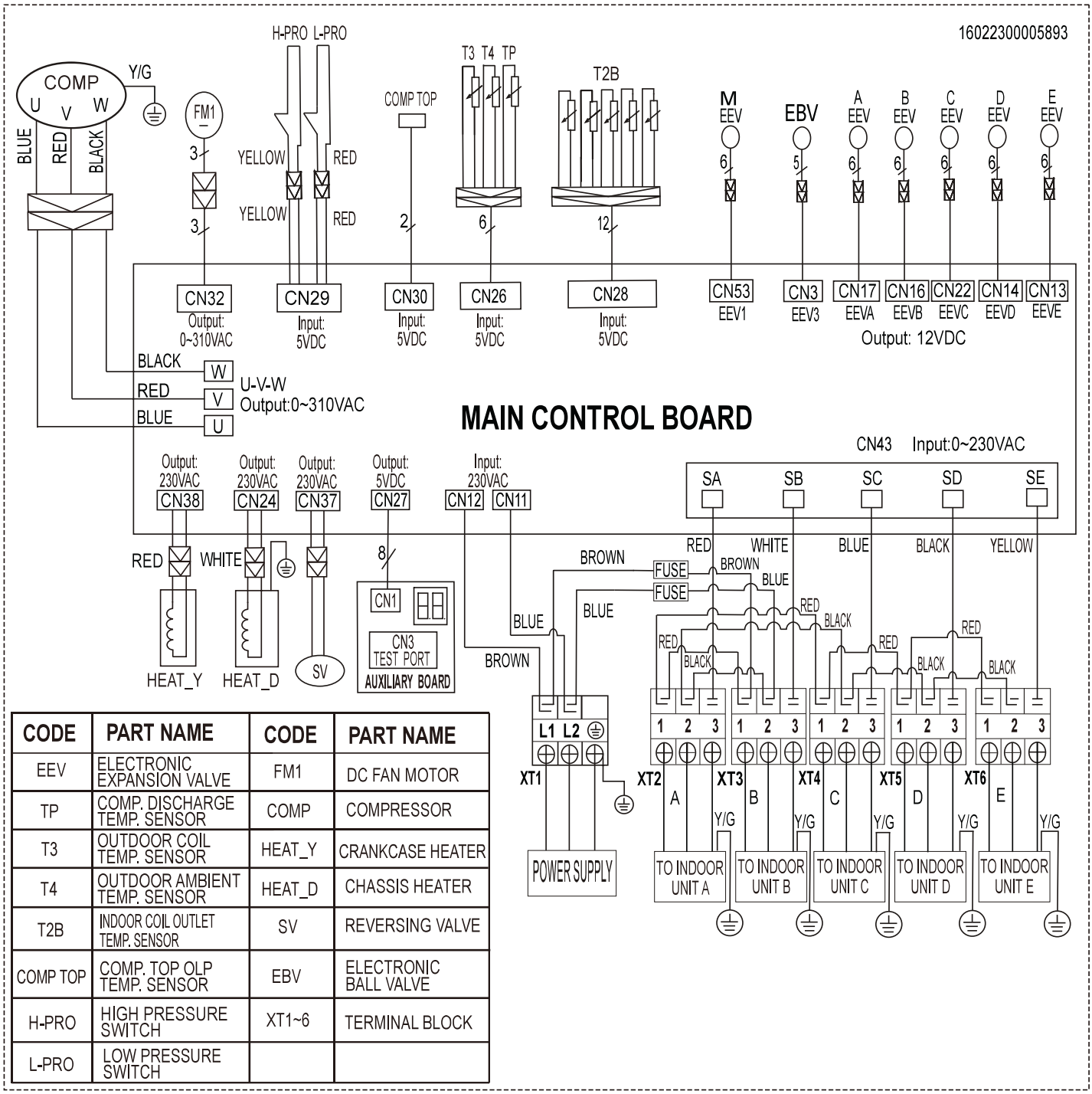

CODE	PART NAME	CODE	PART NAME
EEV	ELECTRONIC EXPANSION VALVE	FM1	DC FAN MOTOR
TP	COMP. DISCHARGE TEMP. SENSOR	COMP	COMPRESSOR
T3	OUTDOOR COIL TEMP. SENSOR	HEAT_Y	CRANKCASE HEATER
T4	OUTDOOR AMBIENT TEMP. SENSOR	HEAT_D	CHASSIS HEATER
T2B	INDOOR COIL OUTLET TEMP. SENSOR	SV	REVERSING VALVE
COMP TOP	COMP. TOP OLP TEMP. SENSOR	EBV	ELECTRONIC BALL VALVE
H-PRO	HIGH PRESSURE SWITCH	XT1~6	TERMINAL BLOCK
L-PRO	LOW PRESSURE SWITCH		

Fig. 16 — Wiring Diagram 36K

WIRING DIAGRAMS (CONT)

48K

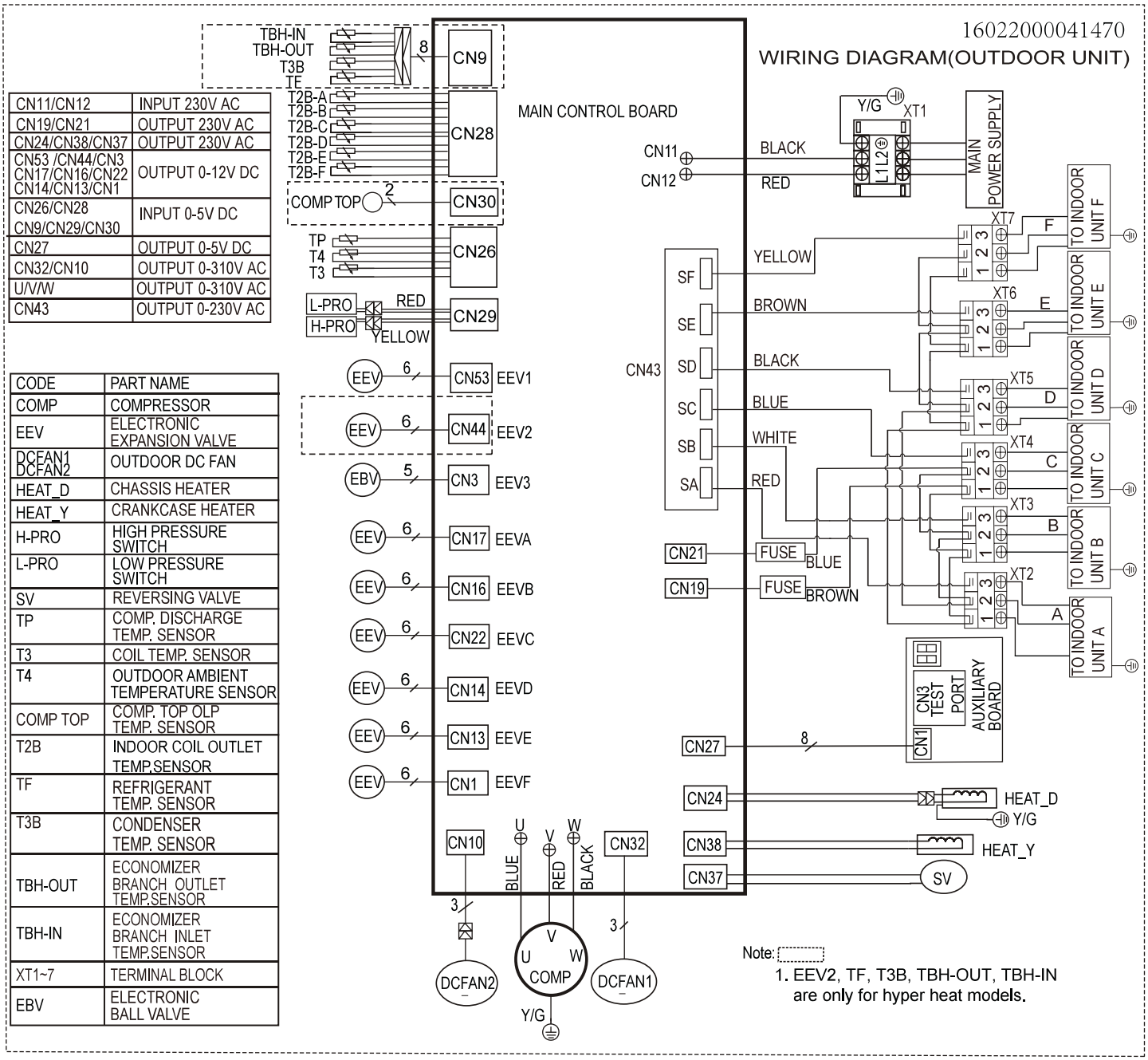

CN11/CN12	INPUT 230V AC
CN19/CN21	OUTPUT 230V AC
CN24/CN38/CN37	OUTPUT 230V AC
CN53 /CN44/CN3 CN17/CN16/CN22 CN14/CN13/CN1	OUTPUT 0-12V DC
CN26/CN28 CN9/CN29/CN30	INPUT 0-5V DC
CN27	OUTPUT 0-5V DC
CN32/CN10	OUTPUT 0-310V AC
U/V/W	OUTPUT 0-310V AC
CN43	OUTPUT 0-230V AC

CODE	PART NAME
COMP	COMPRESSOR
EEV	ELECTRONIC EXPANSION VALVE
DCFAN1 DCFAN2	OUTDOOR DC FAN
HEAT_D	CHASSIS HEATER
HEAT_Y	CRANKCASE HEATER
H-PRO	HIGH PRESSURE SWITCH
L-PRO	LOW PRESSURE SWITCH
SV	REVERSING VALVE
TP	COMP. DISCHARGE TEMP. SENSOR
T3	COIL TEMP. SENSOR
T4	OUTDOOR AMBIENT TEMPERATURE SENSOR
COMP TOP	COMP. TOP OLP TEMP. SENSOR
T2B	INDOOR COIL OUTLET TEMP.SENSOR
TF	REFRIGERANT TEMP. SENSOR
T3B	CONDENSER TEMP. SENSOR
TBH-OUT	ECONOMIZER BRANCH OUTLET TEMP.SENSOR
TBH-IN	ECONOMIZER BRANCH INLET TEMP.SENSOR
XT1~7	TERMINAL BLOCK
EBV	ELECTRONIC BALL VALVE

Fig. 17 — Wiring Diagram 48K

GUIDE SPECIFICATIONS

MULTI-ZONE HEAT PUMP HORIZONTAL DISCHARGE OUTDOOR DUCTLESS SYSTEM

Size Range:1 1/2, 2, 3, and 4 Ton Nominal Cooling and Heating Capacity
Model Number: **37MTRAQ**

Part 1 - General

1.01 System Description

a. Outdoor air−cooled split system compressor sections suitable for on−the−ground, rooftop, wall hung or balcony mounting. Units consist of a variable speed rotary compressor, an air−cooled coil, propeller−type draw−through outdoor fan, reversing valve, accumulator, electronic expansion valves, multiple service valves, and controls that allow multiple indoor units to be connected to the outdoor unit. Units discharge horizontally as shown on the contract drawings. Units function as the outdoor component of an air−to−air heat pump system.
b. Units are designed for use in a refrigeration circuit matched to two, three, four, or five multi style heat pump fan coil units.

1.02 Agency Listings

a. Unit construction complies with ANSI/ASHRAE 15, latest revision, and with the NEC.
b. Units are evaluated in accordance with the UL standard 1995.
c. Units are listed in CEC directory.
d. Unit cabinet is capable of withstanding the 500-hour salt spray test per Federal Test Standard no. 141 (method 6061).
e. Air-cooled condenser coils are leak tested at 550 psig.

1.03 Delivery, Storage, And Handling

Units are shipped in one piece and are stored and handled per the manufacturer's recommendations.

1.04 Warranty (For Inclusion By Specifying Engineer)

Part 2 - Products

2.01 Equipment

1. **General:**
   Factory assembled, single piece, air-cooled outdoor unit. Contained within the enclosure are the factory wiring, piping, controls, and the compressor.
2. **Unit Cabinet:**
   a. The unit cabinet is constructed of galvanized steel, bonderized and coated with baked-enamel finish on the inside and outside.
   b. The unit access panel is removable and provides full access to the compressor, fan, and the control components.
   c. The outdoor compartment is isolated and has an acoustic lining to assure a quiet operation.
3. **Fans:**
   a. The outdoor fans are direct-drive propeller type, and discharge air horizontally. The fan draws air through the outdoor coil.
   b. Outdoor fan motors are multi-speed, totally-enclosed, single phase motors with permanently lubricated ball bearings. The motor is protected by internal thermal overload protection.
   c. The shaft has an inherent corrosion resistance.
   d. Outdoor fan openings are equipped with a metal/mesh PVC coated protection grille over the fan.
4. **Compressor:**
   a. The compressor is the fully hermetic variable speed rotary type.
   b. The compressor is inverter driven.
   c. The compressor is equipped with an oil system, operating oil charge, and motor.
   d. The motor is suitable for operation in a refrigerant and oil atmosphere.
   e. The compressor assembly is installed on rubber vibration isolators.
   f. The inverter and compressor are protected against over temperature and over current.
5. **Outdoor Coil:**
   The coil is constructed of aluminum golden hydrophilic pre-coated fins mechanically bonded to seamless copper tubes, which are cleaned, dehydrated and sealed.
6. **Refrigerant Components:**
   Refrigerant circuit components include multiple brass external liquid line service valves with a service gauge connection port, multiple suction line service valves with a service gage connection port, accumulator, reversing valve, and electronic expansion valves.
7. **Safeties:**
   Operating safeties are factory selected, assembled, and tested. The minimum functions include the following:
   a. Compressor discharge over temperature protection.
   b. System low voltage protection.
   c. Compressor overload protection.
   d. Compressor over current protection.
   e. IPM module protection.
8. **Electrical Requirements:**
   a. Units operate on single-phase, 60 Hz power at 208/230v.
   b. The unit electrical power is a single point connection.
   c. All power and control wiring must be installed per NEC and all local electrical codes.
   d. Units have multiple terminal blocks to connect to multiple indoor units.

© 2026 Carrier. All rights reserved.

Manufacturer reserves the right to change, at any time, specifications and designs without notice and without obligations.