PH4G--K
13.4 SEER2 Single-Packaged Heat Pump System with R-410A Refrigerant
Single Phase 2-5 Nominal Tons (Sizes 24-60)
Three Phase 3-5 Nominal Tons (Sizes 36-60)

Product Data

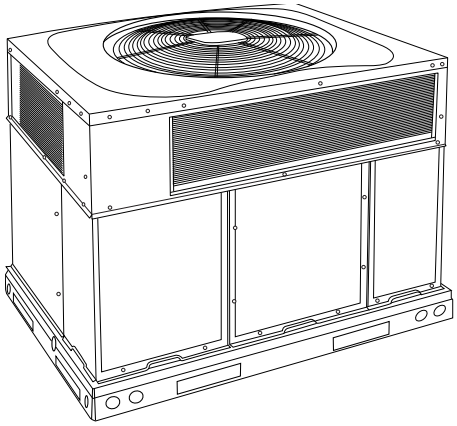

A09183

Fig. 1 – Unit PH4G

Single-Packaged Products with Energy-Saving Features and refrigerant.

- 13.4 SEER2
- 11.05 EER2
- 6.7 HSPF2
- ECM Motor-Standard
- Cabinet air leakage of 2.0% or less at.5 in. W.C. when tested in accordance with ASHRAE standard 193. (Low leak FIOP models only.)

Features/Benefits

One-piece Heat Pump unit with optional electric heater, low installation cost, dependable performance and easy maintenance.

Environmentally Sound Refrigerant is an HFC refrigerant which does not contain chlorine that can harm the ozone layer. refrigerant is in service in millions of systems, proving highly reliable and is non-ozone depleting.

Easy Installation

Factory-assembled package is a compact, fully self-contained, heat pump unit that is prewired, pre-piped, and pre-charged for minimum installation expense. These units are available in a variety of standard capacity ranges with voltage options to meet residential and light commercial requirements. Units are lightweight and install easily on a rooftop or at ground level. The high tech composite base eliminates rust problems associated with ground level applications.

Durable, dependable components

Scroll Compressors are designed for high efficiency. Each compressor is hermetically sealed against contamination to help promote longer life and dependable operation. Each compressor also has vibration isolation to provide quieter operation. All compressors have internal high pressure and overcurrent protection.

ECM Motor is standard on all models. Direct-drive, PSC (Permanent Split Capacitor) condenser-fan motors are designed to help reduce energy consumption and provide for cooling operation down to 40°F (4.4°C) outdoor temperature. Low ambient kit is available as a field installed accessory.

Innovative Unit Base Design

On the inside a high-tech composite material will not rust and incorporates a sloped drain pan which improves drainage and helps inhibit mold, algae and bacterial growth. On the outside metal base rails provide added stability as well as easier handling and rigging.

Refrigerant system is designed to provide dependability. Liquid filter driers are used to promote clean, unrestricted operation. Each unit leaves the factory with a full refrigerant charge. Refrigerant service connections make checking operating pressures easier.

High and Low Pressure Switches provide added reliability for the compressor.

Indoor and Outdoor coils are computer-designed for optimum heat transfer and efficiency. The indoor coil is aluminum indoor coil and is located inside the unit for protection against damage. The outdoor coil is internally mounted on the top tier of the unit.

Low sound ratings ensure a quiet indoor and outdoor environment with sound ratings as low as 69.9 dBA.

Easy to service cabinets provide easy 3 panel accessibility to serviceable components during maintenance and installation. The base with integrated drain pan provides easy ground level installation with mounting pad. A nesting feature ensures a positive basepan to roof curb seal when the unit is roof mounted. A convenient 3/4-in. wide perimeter flange makes frame mounting on a rooftop easy.

Convertible duct configuration

Unit is designed for use in either downflow or horizontal applications. Each unit is converted from horizontal to downflow with the two standard duct covers. Downflow operation is easily provided in the field to allow vertical ductwork connections. The basepan utilizes seals on the bottom openings to ensure a positive seal in the vertical airflow mode.

Cabinets are constructed of heavyduty, phosphated, zinc-coated prepainted steel capable of withstanding 500 hours in salt spray. Interior surfaces of the evaporator and electric heater compartments are insulated with cleanable semi-rigid insulation board, which keeps the conditioned air from being affected by the outdoor ambient temperature and provides improved indoor air quality. (Conforms to American Society of Heating, Refrigeration and Air Conditioning Engineers No. 62P.) The sloped drain pan minimizes standing water in the drain. An external drain is provided.

Short-Cycling protection for the compressor is incorporated into our defrost control board ensuring a five minute delay (+/-2 minutes) before restarting compressor after shutdown for any reason.

Limited Warranty*

- Default 5 year parts limited warranty
  - -10 year parts limited warranty with timely registration. Equipment must be registered within 90 days of original installation, except in jurisdictions where warranty benefits cannot be conditioned on registration.

* Applies to original purchaser/homeowner and 5 years to subsequent owners.

- Default 5-year on compressor limited warranty

-10-year on compressor limited warranty with timely registration. Equipment must be registered within 90 days of original installation, except in jurisdictions where warranty benefits cannot be conditioned on registration.

* Applies to original purchaser/homeowner and 5 years to subsequent owners. See warranty certificate for complete details and restrictions

Table of Contents

Features/Benefits 1
Model Number Nomenclature 2
AHRI* Capacities 3
Unit Dimensions - 24-30 7
Unit Dimensions - 36-60 8
Roof Curb Accessory Dimensions 9
Selection Procedure (with example) 10
Typical Piping and Wiring 20
Application Data 20
Balance Point Worksheet 21
Typical Connection Wiring Schematic - 208/230-1-60 24
Typical Ladder Wiring Schematic - 208/230-1-60 25
Controls 30
Guide Specifications 31

Model Number Nomenclature

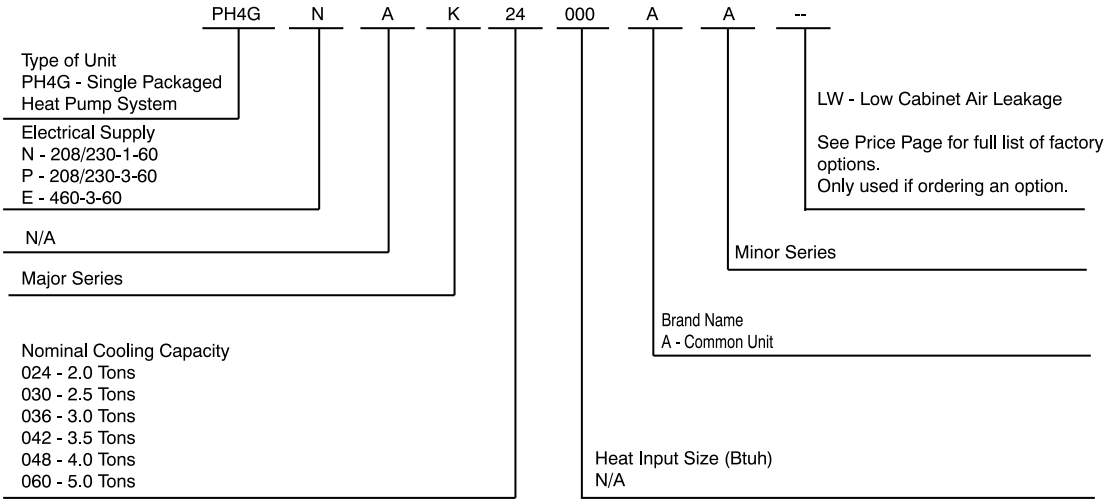

Use of the AHRI Certified TM Mark indicates a manufacturer's participation in the program For verification of certification for individual products, go to www.ahridirectory.org.

SAP ORDERING NO.	NOMINAL COOLING CAPACITY (Btuh)	VOLTS-PHASE (60 HZ)	APPROX SHIP WT (LB)
PH4GNAK24000**	24,000	208/230-1	343
PH4GNAK30000**	30,000	208/230-1	376
PH4GNAK36000**	36,000	208/230-1	420
PH4GPAK36000**	36,000	208/230-3	420
PH4GEAK36000**	36,000	460-3	420
PH4GNAK42000**	42,000	208/230-1	440
PH4GPAK42000**	42,000	208/230-3	440
PH4GEAK42000**	42,000	460-3	440
PH4GNAK48000**	48,000	208/230-1	440
PH4GNAK48000**	48,000	208/230-3	440
PH4GEAK48000**	48,000	460-3	440
PH4GNAK60000**	60,000	208/230-1	510
PH4GPAK60000**	60,000	208/230-3	497
PH4GEAK60000**	60,000	460-3	497

** = LW - Low cabinet air leakage option available.
-- = No options

AHRI* Capacities

Cooling Capacities and Efficiencies

UNIT	NOMINAL TONS	STANDARD CFM	COOLING CAPACITY	EER2	SEER2
24	2	750	22000	11.05	13.4
30	2.5	950	29400	11.05	13.4
36	3	1150	33400	11.05	13.4
42	3.5	1350	40000	11.05	13.4
48	4	1600	47000	11.05	13.4
60	5	1750	55000	11.05	13.4

Heat Pump Heating Capacities and Efficiencies

UNIT	HEATING CAPACITY (BTUH) @ 47°F (8.3°C)	COP @ 47°F (8.3°C)	HEATING CAPACITY (BTUH) @ 17°F (-8.3°C)	COP @ 17°F (-8.3°C)	HSPF2
24	24000	3.7	12500	2.20	6.7
30	30000	3.6	17700	2.30	6.7
36	35000	3.8	18400	2.30	6.7
42	40000	3.7	22400	2.30	6.7
48	46000	3.7	25000	2.30	6.7
60	57000	3.5	32200	2.42	6.7

LEGEND
dB-Sound Levels (decibels)
db—Dry Bulb
SEER2—Seasonal Energy Efficiency Ra
wb—Wet Bulb
COP-Coefficient of Performance
HSPF2-Heating Season Performance Factor
* Air Conditioning, Heating & Refrigeration Institute.
**At “A” conditions-80°F (26.7°C) indoor db/67°F (19.4°C) indoor wb & 95°F (35°C) outdoor db.
†Rated in accordance with U.S. Government DOE Department of Energy) test procedures and/or AHRI Standards 210/240.
Notes:
1. Ratings are net values, reflecting the effects of circulating fan heat.
Ratings are based on:
Cooling Standard: 80°F (26.7°C) db, 67°F (19.4°C) wb indoor entering-air temperature and 95°F (35°C) db outdoor entering-air temperature.
2. Before purchasing this appliance, read important energy cost and efficiency information available from your retailer.

A-Weighted Sound Power Level (dBA)

UNIT SIZE	STANDARD RATING (dBA)	TYPICAL OCTAVE BAND SPECTRUM (dBA without tone adjustment)						
		125	250	500	1000	2000	4000	8000
24	69.9	59.0	56.6	57.9	60.9	55.3	51.7	44.0
30	73.1	55.9	57.0	63.1	63.7	59.7	54.2	48.8
36	72.0	52.2	56.7	62.7	62.6	60.0	55.3	49.3
42	73.7	54.5	61.3	63.5	63.5	60.5	58.2	53.3
48	74.0	56.9	59.3	63.9	64.5	61.7	55.4	47.4
60	74.7	60.0	61.6	63.8	63.5	62.0	59.3	50.3

NOTE: Tested in compliance with AHRI 270 but not listed with AHRI.

Manufacturer reserves the right to change, at any time, specifications and designs without notice and without obligations.

Physical Data

	24	30	36	42	48	60
Unit Size	2	2.5	3	3.5	4	5
Shipping Weight* (lb) (kg)	343 155.6	376 170.6	420 190.6	440 199.6	440 199.6	510 231.4
Compressor Quantity	1					
Type	Scroll					
Refrigerant	R-410A					
Refrigerant Quantity (lb) Quantity (kg)	7.25 3.3	11.5 5.2	10.4 4.7	10.5 4.8	10.0 4.5	13.25 6.0
Refrigerant Metering Device	Indoor TXV, Outdoor Dual Accuraters				Indoor Accurater, Outdoor Dual Accuraters	Indoor TXV, Outdoor Dual Accuraters
Orifice ID (in) (mm)	N/A				0.080 (1) 2.03 (1)	N/A
Orifice OD (in) (mm)	0.032 (2) 0.81 (2)	0.035 (2) 0.89 (2)	0.040 (2) 1.02 (2)	0.046 (2) 1.17 (2)	0.046 (2) 1.17 (2)	0.046 (2) 1.17 (2)
Outdoor Coil Rows...Fins/in, face area (sq. ft.)	1...21 18.8	2...21 18.8	1...21 23.3	1...21 23.3	2...21 13.6	2...21 17.5
Outdoor Fan Nominal Airflow (cfm) Diameter (in.) Diameter (mm) Motor hp (rpm)	3000 24 610 1/10 (810)	3500 24 610 1/5 (810)	3500 26 660 1/5 (810)	3500 26 660 1/5 (810)	3500 26 660 1/5 (810)	3500 26 660 1/5 (810)
Indoor Coil Rows...Fins/in, face area (sq. ft.)	3...15 3.7	3...17 3.7	3...17 4.7	3...17 4.7	3...17 5.6	3...17 5.6
Indoor Blower Nominal Airflow (cfm) Size (in.) Size (mm) Motor hp (rpm)	750 10 x 10 254 x 254 1/2	950 10 x 10 254 x 254 1/2	1150 11 x 10 279 x 254 1/2	1350 11 x 10 279 x 254 3/4	1600 11 x 10 279 x 254 1	1750 11 x 10 279 x 254 1
High Pressure Switch (psig) Cutout Reset (Auto)	650 +/- 15 420 +/- 25					
Loss-of-Charge/Low Pressure Switch (psig) Cutout Reset (Auto)	20 +/- 5 45 +/- 10					
Return Air Filters disposable†	2 each 20x12x1 in. 508x305x25 mm		1 each 24x14x1in. 610x356x25 mm 24x16x1 in. 610x406x25 mm		1 each 24x16x1 in. 610x406x25 mm 24x18x1 in. 610x457x25 mm	

*. For 460 volt units, add 14 lb (6.4 kg) to the weight.

†. Required filter sizes shown are based on the larger of the AHRI (Air Conditioning Heating and Refrigeration Institute) rated cooling airflow or the heating airflow velocity of 300-350 ft/minute for throwaway type or 450 ft/minute for high-capacity type. Air filter pressure drop for non-standard filters must not exceed 0.08 IN. W.C.
If using accessory filter rack refer to the filter rack installation instructions for correct filter size and quantity.

Manufacturer reserves the right to change, at any time, specifications and designs without notice and without obligations.

ACCESSORIES

PART NUMBER	DESCRIPTION	USED WITH
CPRFCURB011B00*	Roof Curb, 14-in. High	24 - 60
CPRFCURB013B00		36 - 60
CPADCURB001A00†	Adapter curb	24 - 30
CPADCURB002A00†		36 - 60
CPGSKTKIT001A00	Gasket Kit for existing roof curb with new base rail unit	All
CPECOMZR007B00	Economizer - Vertical, gear driven w/Filter Rack and 1-in. filter	24 - 30
CPECOMZR008A00		36 - 42
CPECOMZR009A00		48 - 60
CPECOMZR010A00	Economizer - Horizontal w/Filter Rack and 1-in filter.	24 - 30
CPECOMZR011A00		36 - 42
CPECOMZR012A00		48 - 60
AXB078ENT	Outdoor Enthalpy Control	ALL
CPMANDPR007A00	Manual Outside Air Damper - External w/Filter Rack and 1-in. filters	24 - 30
CPMANDPR008A00		36 - 42
CPMANDPR009A00		48 - 60
CPFILTRK007A00	Internal Filter Rack (includes 1-in. filters)	24 - 30
CPFILTRK008A00		36 - 42
CPFILTRK009A00		48 - 60
CPLOWAMB001A00	Low Ambient Control	ALL
CPDUCFLG002A00	Square to Round (1 set of 2, used with horizontal duct flanges only)	24 - 48
CPHSTART002A00	Compressor Start Assist Kit (single phase only)	ALL
CPCRKHTR008A00	240V Crankcase Heater Single Phase	24 - 36
CPCRKHTR004A00		42 - 60
NRTIMEGD001A00	Five Minute Compressor Delay	ALL
HN65KJ016	Relay Pilot Duty	ALL
CPFLUEDS001A00	Flue Discharge Deflector Assembly	ALL
CPLOUVER022A00	Louver Kit	24-30
CPLOUVER019A00		36-42
CPLOUVER009A00		48
CPLOUVER017A00		60

	Nominal Capacity (kW)	Fuses	
ELECTRIC HEATERS (208/230 — SINGLE PHASE — 60 Hz)			
CPHEATER052B0‡	5.0	-	24 - 36
CPHEATER064B0‡	5.0	4	ALL
CPHEATER070B0‡	7.2	4	ALL
CPHEATER050B0‡	10.0	4	ALL
CPHEATER066B0‡	15.0	6	36 - 60
CPHEATER133B0‡	15.0	4	30
CPHEATER054B0‡	20.0	6	42 - 60
ELECTRIC HEATERS (208/230 — THREE PHASE — 60 Hz)			
CPHEATER055B0‡	5.0	-	36 - 60
CPHEATER056B0‡	10.0	-	36 - 42
CPHEATER068B0‡	10.0	6	36 - 60
CPHEATER058B0‡	20.0	6	36 - 60
CPHEATER059B0‡	20.0	6	42 - 60
ELECTRIC HEATERS (460 THREE PHASE — 60 Hz)			
CPHEATER061B0‡	5.0	-	36 - 60
CPHEATER062B0‡	15.0	-	36 - 60
CPHEATER063B0‡	20.0	-	42 - 60

*. CPFRCURB011B00 can be used with 42-60 size units with some overhang.
†. Can also be used when replacing other manufacturer's older generation units that contain a composite base without a metal base rail.
‡. Denotes digit can be 0, 1 or 2.
Note: If installing an accessory heater, the thermostat must have capability to energize "G" (fan) on a call for "W" (electric heat). TSTAT0406 and TSTAT0408 contain this feature.

Minimum Airflow for Reliable Electric Heater Operation (CFM)

SIZE	24	30	36	42	48	60
AIRFLOW (CFM)	800	1025	1250	1400	1710	1800

Manufacturer reserves the right to change, at any time, specifications and designs without notice and without obligations.

ECONOMIZER

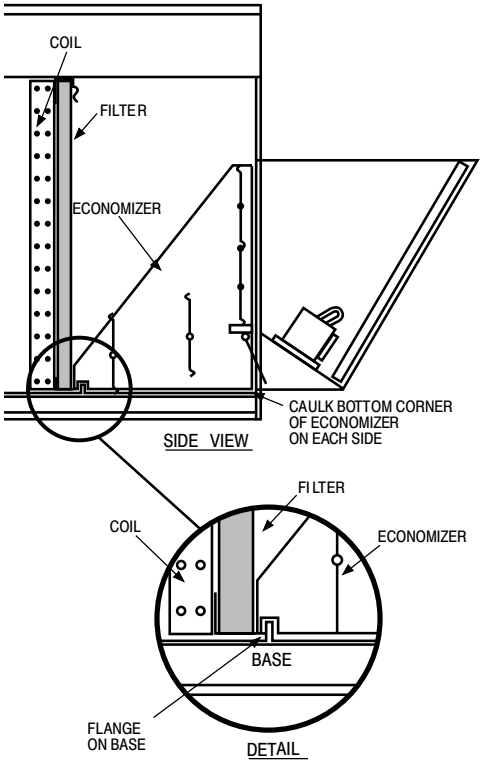

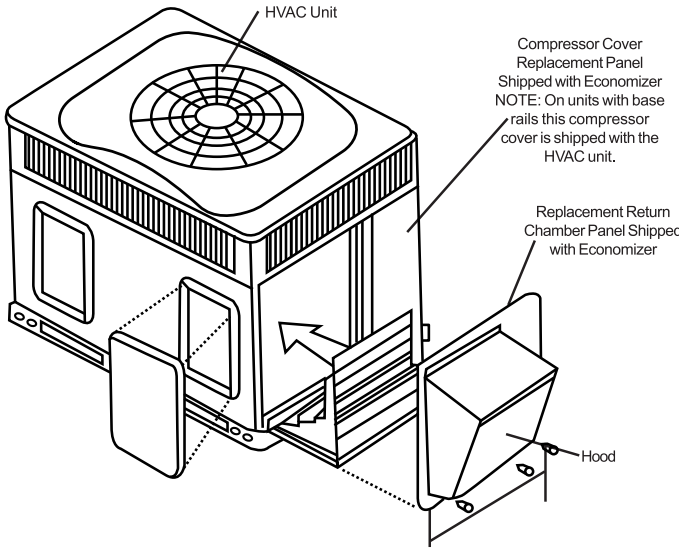

Vertical Economizer

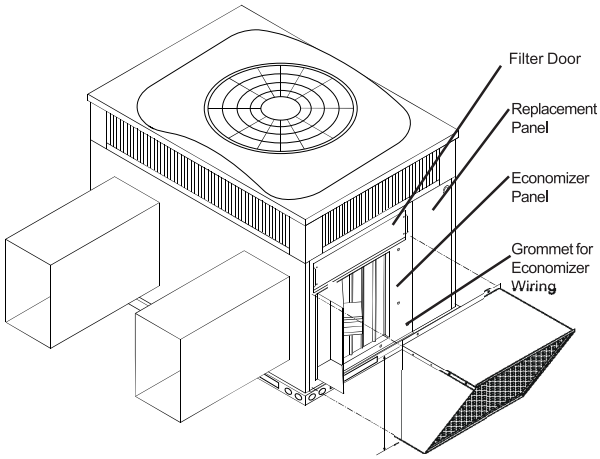

Horizontal Economizer

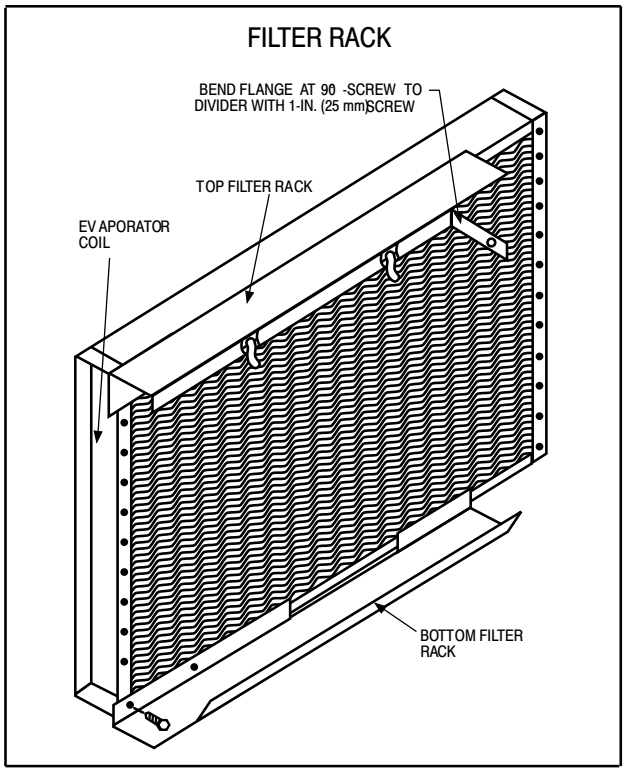

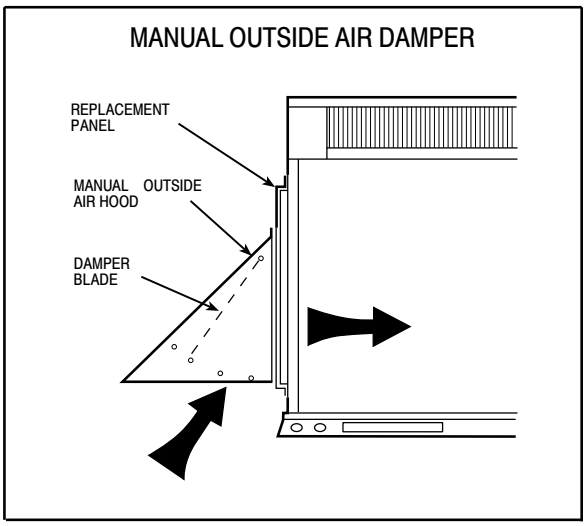

A09375

Unit Dimensions - 24-30

COOLING CAPACITY	UNIT WT.		UNIT HEIGHT	CENTER OF GRAVITY IN/MM		
	LB	KG	"A"	X	Y	Z
24	332	150.6	51-3/4 1315	20-1/2 520.7	15-3/4 394	16-5/8 422.3
30	365	165.6	51-3/4 1315	20-1/2 520.7	15-3/4 394	16-5/8 422.3

UNIT	CORNER WEIGHT LB/KG			
	"1"	"2"	"3"	"4"
24	84.8 38.5	74.9 34.0	81.2 36.8	91.1 41.3
30	93.3 42.3	82.1 37.3	89.2 40.5	100.4 45.5

REQUIRED CLEARANCES TO COMBUSTIBLE MATL. INCHES [MM]

TOP OF UNIT.....14 [355.6]
DUCT SIDE OF UNIT.....2 [50.8]
SIDE OPPOSITE DUCTS.....14 [355.6]
BOTTOM OF UNIT.....0 [0]
ELECTRICAL PANEL.....36 [914.4]

NEC. REQUIRED CLEARANCES.

BETWEEN UNITS, POWER ENTRY SIDE.....42 [1066.8]
UNIT AND GROUNDED SURFACES, POWER ENTRY SIDE.....36 [914.0]
UNIT AND BLOCK OR CONCRETE WALLS AND OTHER GROUNDED SURFACES, POWER ENTRY SIDE.....42 [1066.8]

REQUIRED CLEARANCE FOR OPERATION AND SERVICING INCHES [MM]

EVAP. COIL ACCESS SIDE.....36 [914.4]
POWER ENTRY SIDE.....36 [914.0]
(EXCEPT FOR NEC REQUIREMENTS)
UNIT TOP.....42 [1066.8]
SIDE OPPOSITE DUCTS.....48 [1219.2]
DUCT PANEL.....36 [914.0]
*MINIMUM DISTANCES:IF UNIT IS PLACED LESS THAN 12 [304.8] FROM WALL SYSTEM,THEN SYSTEM PERFORMANCE MAYBE COMPROMISED.

DIMENSIONS IN [] ARE IN MILLIMETERS

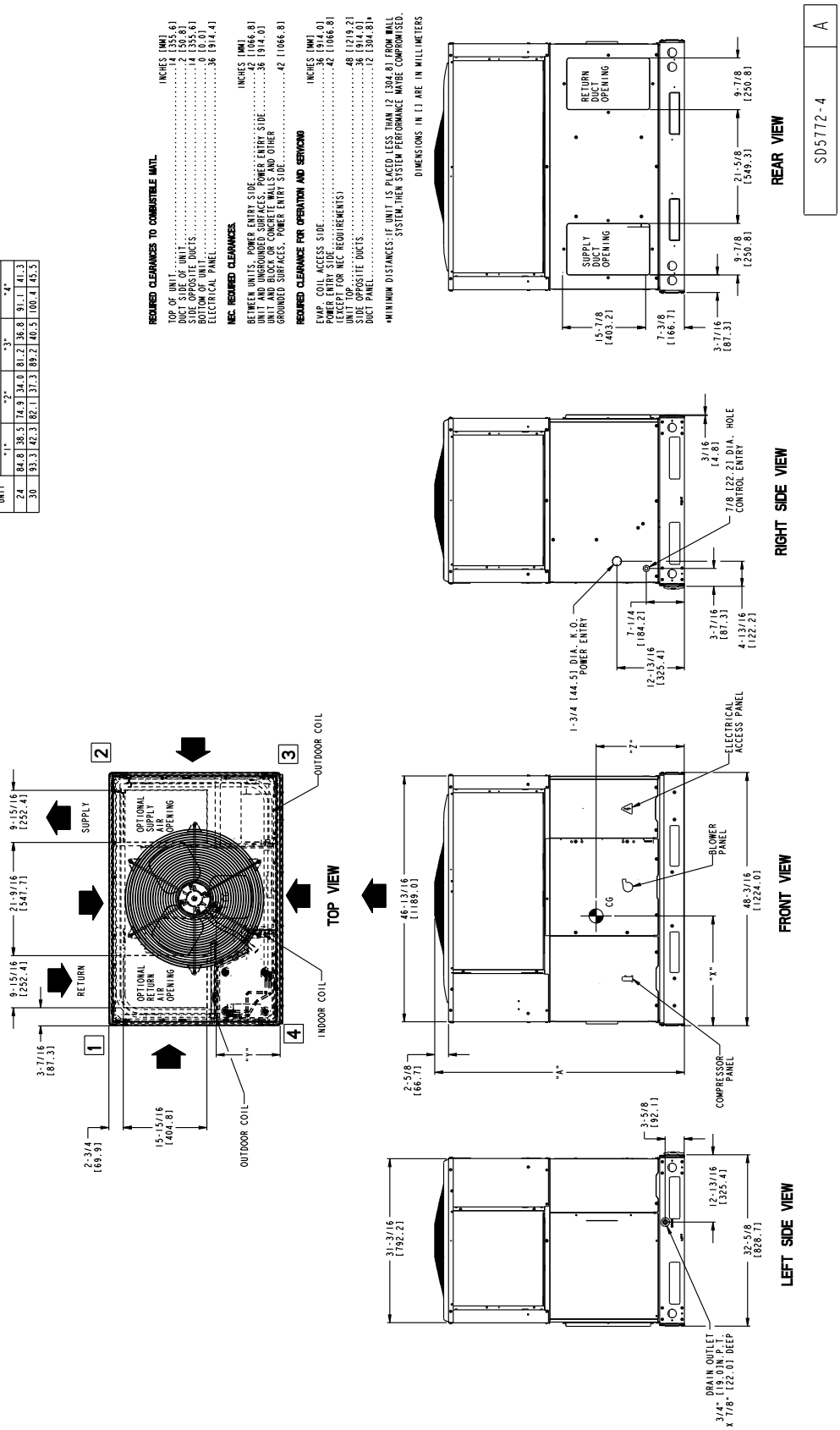

A221486

Unit Dimensions - 36-60

COOLING CAPACITY	UNIT WT.		UNIT HEIGHT	CENTER OF GRAVITY IN/MM					
	LB	KG	"A"	X		Y		Z	
36	406	184.2	54-3/4	1391	20-1/2	521	17-1/2	445	17-3/8	448
42	426	193.3	54-3/4	1391	20-1/2	521	17-1/2	445	17-3/8	448
48	426	193.3	44-3/4	1137	20-1/2	521	17-1/2	445	17-3/8	448
60	496	225.0	48-3/4	1238	20-1/2	521	17-1/2	445	18	457

UNIT	CORNER WEIGHT LB/KG			
	"1"	"2"	"3"	"4"
36	88.6 40.2	78.4 35.6	78.4 51.1	112.6 57.4
42	92.9 42.2	82.4 37.4	82.4 53.7	118.3 60.0
48	92.6 42.0	82.5 37.4	82.5 53.5	117.9 60.4
60	107.5 48.8	95.5 43.4	95.5 62.5	137.8 70.4

REQUIRED CLEARANCES TO COMBUSTIBLE MATL.

	INCHES [MM]
TOP OF UNIT	14 [355.6]
DUCT SIDE OF UNIT	12 [305.8]
SIDE OPPOSITE DUCTS	14 [355.6]
BOTTOM OF UNIT	0 [0.0]
ELECTRICAL PANEL	36 [914.4]

NEC. REQUIRED CLEARANCES.

	INCHES [MM]
BETWEEN UNITS, POWER ENTRY SIDE	42 [1066.8]
UNIT AND UNGROUNDED SURFACES, POWER ENTRY SIDE	36 [914.0]
UNIT AND BLOCK OR CONCRETE WALLS AND OTHER GROUNDED SURFACES, POWER ENTRY SIDE	42 [1066.8]

REQUIRED CLEARANCE FOR OPERATION AND SERVICING

	INCHES [MM]
EVAP. COIL ACCESS SIDE	36 [914.0]
POWER ENTRY SIDE (EXCEPT FOR NEC REQUIREMENTS)	42 [1066.8]
UNIT TOP	48 [1219.2]
SIDE OPPOSITE DUCTS	36 [914.0]
DUCT PANEL	12 [304.8]*

*MINIMUM DISTANCES-IF UNIT IS PLACED LESS THAN 12 [304.8] FROM WALL SYSTEM, THEN SYSTEM PERFORMANCE MAYBE COMPROMISED.

DIMENSIONS IN [] ARE IN MILLIMETERS

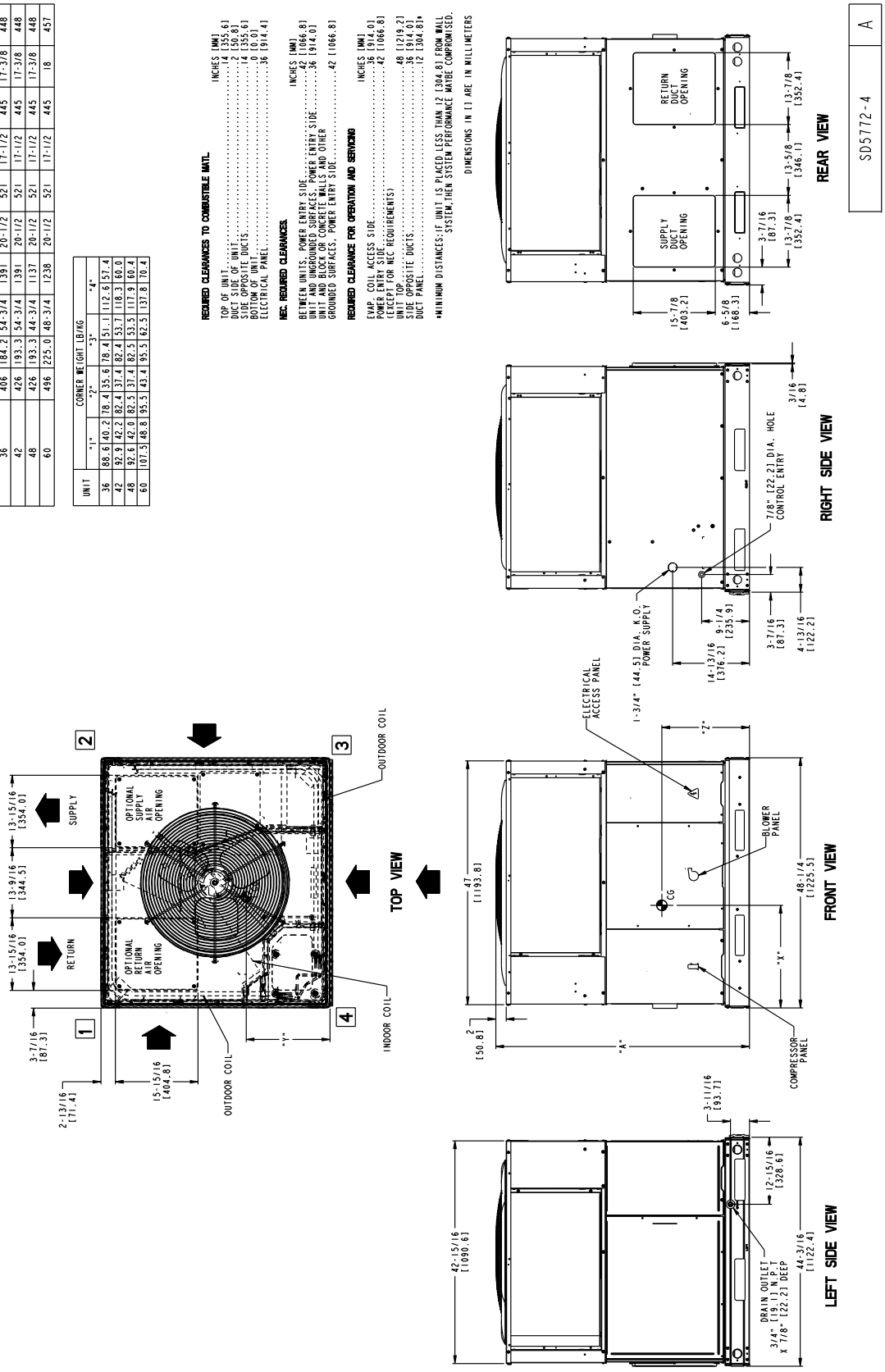

A221487

Roof Curb Accessory Dimensions

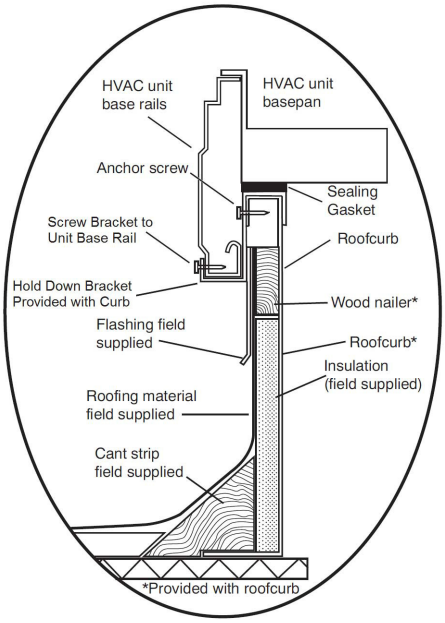

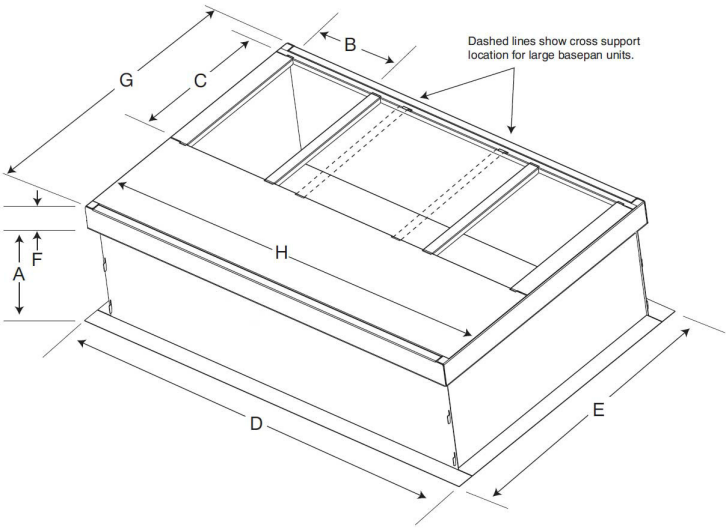

SMALL/COMMON CURB

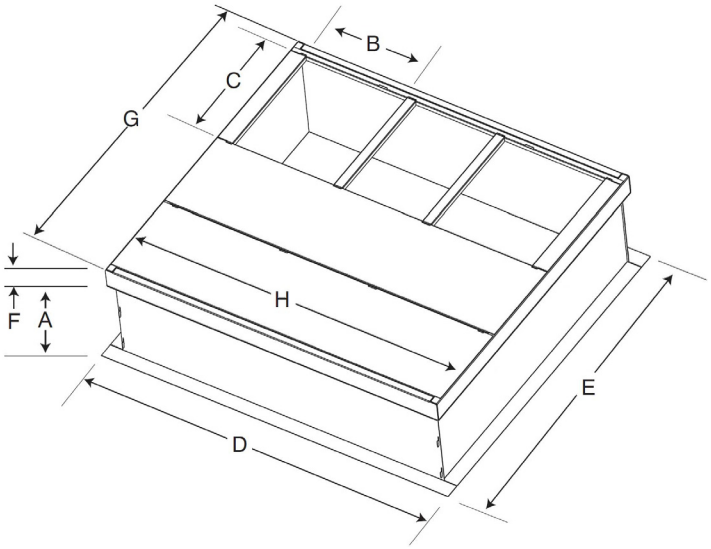

LARGE CURB

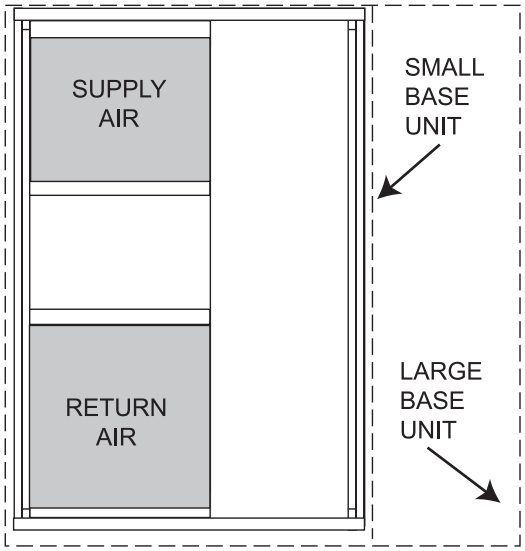

UNIT PLACEMENT ON COMMON CURB

SMALL OR LARGE BASE UNIT

A180216

UNIT SIZE	CATALOG NUMBER	A IN. (mm)	B (small/common base) IN. (mm)*	B (large base) IN. (mm)*	C IN. (mm)	D IN. (mm)	E IN. (mm)	F IN. (mm)	G IN. (mm)	H IN. (mm)
Small or Large	CPRFCURB011B00	14 (356)	10 (254)	14 (356)	16 (406)	47.8 (1214)	32.4 (822)	2.7 (69)	30.6 (778)	46.1 (1170)
Large	CPRFCURB013B00	14 (356)	14 (356)				43.9 (1116)		42.2 (1072)	

*. Part Number CPRCURB011B00 can be used on both small and large basepan units. The cross supports must be located based on whether the unit is a small basepan or a large basepan.

NOTES:

1. Roof curb must be set up for unit being installed.
2. Seal strip must be applied, as required, to unit being installed.
3. Roof curb is made of 16-gauge steel.
4. Attach ductwork to curb (flanges of duct rest on curb).
5. Insulated panels: 1-in. (25 mm) thick fiberglass 1 lb. density.

Manufacturer reserves the right to change, at any time, specifications and designs without notice and without obligations.

Selection Procedure (with example)

Determine cooling and heating requirements at design conditions:

Given:

Required Cooling Capacity (TC) 29,000Btuh
Sensible Heat Capacity (SHC) ..... 21,000 Btuh
Required Heating Capacity ..... 42,000 Btuh
Condenser Entering Air Temperature ..... 95°F (35°C)
Indoor-Air Temperature ..... 80°F (27°C) edb 67°F (19°C) ewb
Evaporator Air Quantity ..... 1000 CFM
External Static Pressure ..... 0.300 IN. W.C.
Electrical Characteristics 208-1-60

Select unit based on required cooling capacity.

Enter Net Cooling Capacities table at condenser entering temperature of 95°F (35°C). Unit 30 at 950 CFM and 67°F (19°C) ewb (entering wet bulb) will provide a total capacity of 29,400 Btuh and a SHC of 26,950 Btuh. Calculate SHC correction, if required, using Note 4 under Cooling Capacities tables.

Select heating capacity of unit to provide design condition requirement.

In the Heating Capacities and Efficiencies table, note that the 30 size unit will deliver 30,000 BTUH at the AHRI high temp rating point. To achieve 42,000 BTUH, accessory electric heat will be required. Use the Balance Point Worksheet to plot the load line with the unit capacity. The difference between the load line and unit capacity at the design heating temperature is the amount of electric heat that will be required.

Determine fan speed and power requirements at design conditions.

Before entering the air delivery tables, calculate the total static pressure required. From the given example, the Wet Coil Pressure Drop Table, and the Filter Pressure Drop Table:

External Static Pressure	0.300 IN. W.C.
Filter	0.070 IN. W.C.
Wet Coil Pressure Drop	0.060 IN. W.C.
Total Static Pressure	0.43 IN. W.C.

Enter the table for Dry Coil Air Delivery- At 0.43 IN. W.C. ESP (external static pressure) and MED-HIGH speed the motor delivers between 1037 CFM and 987 cfm. Interpolation estimates 1022 CFM at .43 IN. W.C. MED-HIGH delivers CFM needed.

Select unit that corresponds to power source available.

The Electrical Data Table shows that the unit is designed to operate at 208/230-1-60.

Manufacturer reserves the right to change, at any time, specifications and designs without notice and without obligations.

Performance Data

24 Cooling Extended Performance Table

EVAPORATOR AIR		CONDENSER ENTERING AIR TEMPERATURES deg F																	
		75 (23.9)			85 (29.4)			95 (35)			105 (40.6)			115 (46.1)			125 (51.7)		
CFM	EWB	Capacity MBtuh		Total System KW	Capacity MBtuh		Total System KW	Capacity MBtuh		Total System KW	Capacity MBtuh		Total System KW	Capacity MBtuh		Total System KW	Capacity MBtuh		Total System KW
		Total	Sens		Total	Sens		Total	Sens		Total	Sens		Total	Sens		Total	Sens	
700	57 (13.9)	22.81	22.81	1.56	22.02	22.02	1.71	20.98	20.98	1.90	19.74	19.74	2.14	18.67	18.67	2.35	17.53	17.53	2.62
	62 (16.7)	23.70	22.09	1.56	22.63	21.55	1.71	21.58	20.39	1.90	20.29	18.82	2.14	19.18	17.40	2.35	18.01	15.91	2.62
	63* (17.2)	24.17	17.82	1.56	23.08	17.24	1.71	21.80	16.66	1.90	20.25	15.99	2.14	18.94	15.32	2.35	17.42	14.82	2.62
	67 (19.4)	25.99	18.57	1.57	24.82	17.96	1.73	23.41	17.35	1.92	21.77	16.66	2.14	20.37	15.96	2.35	18.73	15.44	2.62
	72 (22.2)	28.33	14.85	1.59	27.05	14.19	1.75	25.59	13.65	1.94	23.73	12.99	2.16	22.20	12.29	2.37	20.42	11.74	2.65
750	57 (13.9)	22.42	22.42	1.57	21.65	21.16	1.73	20.62	19.86	1.92	19.41	18.33	2.15	18.35	16.95	2.37	17.23	15.49	2.64
	62 (16.7)	22.67	21.52	1.57	21.65	20.99	1.73	20.65	19.86	1.92	19.41	18.33	2.15	18.35	16.95	2.37	17.23	15.49	2.64
	63* (17.2)	22.92	17.36	1.57	21.88	16.79	1.73	20.67	16.22	1.92	19.20	15.58	2.15	17.96	14.93	2.37	16.52	14.44	2.64
	67 (19.4)	24.64	18.08	1.59	23.53	17.49	1.75	22.20	16.90	1.94	20.65	16.22	2.15	19.31	15.55	2.37	17.76	15.04	2.64
	72 (22.2)	26.86	14.47	1.61	25.65	13.82	1.76	24.26	13.30	1.96	22.50	12.65	2.17	21.05	11.97	2.39	19.36	11.43	2.66
900	57 (13.9)	24.76	24.76	1.62	23.90	23.90	1.78	22.77	22.64	1.97	21.43	20.90	2.20	20.26	19.32	2.41	19.02	17.66	2.69
	62 (16.7)	25.03	24.79	1.62	23.90	23.90	1.78	22.79	22.64	1.97	21.43	20.90	2.20	20.26	19.32	2.41	19.02	17.66	2.69
	63* (17.2)	25.30	19.79	1.62	24.16	19.14	1.78	22.82	18.50	1.97	21.20	17.76	2.20	19.83	17.02	2.41	18.23	16.46	2.69
	67 (19.4)	27.20	20.61	1.64	25.98	19.94	1.79	24.51	19.27	1.99	22.79	18.50	2.20	21.32	17.72	2.41	19.61	17.15	2.69
	72 (22.2)	29.65	16.49	1.65	28.32	15.75	1.81	26.79	15.16	2.01	24.84	14.43	2.22	23.24	13.65	2.44	21.37	13.03	2.71

* At 75°F (23.9 °C) entering dry bulb—Tennessee Valley Authority [TVA] rating conditions; all others at 80°F (26.7 °C) entering dry bulb. See Legend and Notes.

24 Heating Extended Performance Table -10-60°F (-23.3-15.6°C)

INDOOR AIR		OUTDOOR COIL ENTERING AIR TEMPERATURE																							
		-10°F (-23.3°C)			0°F (-17.8°C)			10°F (-12.2°C)			20°F (-6.7°C)			30°F (-1.1°C)			40°F (4.4°C)			50°F (8.3°C)			60°F (15.6°C)		
EDB	CFM	Capacity (Mbtuh)		Total Sys kW	Capacity (Mbtuh)		Total Sys kW	Capacity (Mbtuh)		Total Sys kW	Capacity (Mbtuh)		Total Sys kW	Capacity (Mbtuh)		Total Sys kW	Capacity (Mbtuh)		Total Sys kW	Capacity (Mbtuh)		Total Sys kW	Capacity (Mbtuh)		Total Sys kW
		Total	Integ		Total	Integ		Total	Integ		Total	Integ		Total	Integ		Total	Integ		Total	Integ		Total	Integ	
65°F (18.3°C)	700	8.0	7.4	1.50	10.7	9.8	1.55	13.5	12.5	1.60	16.0	14.5	1.66	18.8	16.5	1.72	22.0	22.0	1.81	25.4	25.4	1.90	28.5	28.5	2.03
	750	8.1	7.5	1.47	10.8	9.9	1.51	13.7	12.6	1.57	16.2	14.7	1.62	19.0	16.6	1.68	22.2	22.2	1.76	25.6	25.6	1.85	28.8	28.8	1.97
	900	8.3	7.6	1.55	11.0	10.1	1.59	13.8	12.7	1.65	16.4	14.8	1.69	19.1	16.8	1.75	22.3	22.3	1.83	25.9	25.9	1.91	29.0	29.0	2.03
70°F (21.1°C)	700	7.8	7.2	1.56	10.4	9.6	1.61	13.2	12.1	1.67	15.6	14.1	1.73	18.3	16.0	1.79	21.4	21.4	1.88	24.7	24.7	1.99	27.8	27.8	2.12
	750	7.9	7.3	1.53	10.5	9.7	1.58	13.3	12.3	1.63	15.8	14.3	1.69	18.5	16.2	1.75	21.6	21.6	1.83	25.0	25.0	1.93	28.1	28.1	2.05
	900	8.1	7.4	1.61	10.7	9.8	1.65	13.5	12.4	1.71	15.9	14.4	1.76	18.6	16.3	1.82	21.8	21.7	1.90	25.2	25.2	1.99	28.2	28.2	2.11
75°F (23.9°C)	700	7.7	7.1	1.63	10.2	9.4	1.68	12.9	11.9	1.74	15.3	13.8	1.80	18.1	15.9	1.87	21.2	21.2	1.96	24.5	24.5	2.07	27.5	27.5	2.20
	750	7.8	7.1	1.59	10.3	9.5	1.64	13.1	12.0	1.70	15.5	14.0	1.75	18.3	16.0	1.82	21.4	21.4	1.90	24.7	24.7	2.01	27.8	27.8	2.13
	900	7.9	7.3	1.67	10.5	9.6	1.71	13.2	12.2	1.77	15.6	14.1	1.82	18.5	16.2	1.88	21.5	21.5	1.97	25.0	25.0	2.06	28.0	28.0	2.18

Manufacturer reserves the right to change, at any time, specifications and designs without notice and without obligations.

Performance Data

30 Cooling Extended Performance Table

EVAPORATOR AIR		CONDENSER ENTERING AIR TEMPERATURES deg F																	
		75 (23.9)			85 (29.4)			95 (35)			105 (40.6)			115 (46.1)			125 (51.7)		
CFM	EWB	Capacity MBtuh		Total System KW	Capacity MBtuh		Total System KW	Capacity MBtuh		Total System KW	Capacity MBtuh		Total System KW	Capacity MBtuh		Total System KW	Capacity MBtuh		Total System KW
		Total	Sens		Total	Sens		Total	Sens		Total	Sens		Total	Sens		Total	Sens	
875	57 (13.9)	29.81	29.81	2.11	28.78	28.78	2.32	27.42	27.42	2.58	25.80	25.80	2.90	24.40	24.40	3.18	22.90	22.90	3.55
	62 (16.7)	30.97	27.74	2.11	29.58	27.05	2.32	28.21	25.59	2.58	26.51	23.63	2.90	25.07	21.84	3.18	23.53	19.97	3.55
	63* (17.2)	31.59	22.38	2.11	30.16	21.64	2.32	28.49	20.91	2.58	26.47	20.08	2.90	24.76	19.24	3.18	22.77	18.61	3.55
	67 (19.4)	33.97	23.31	2.13	32.44	22.55	2.34	30.60	21.78	2.61	28.46	20.91	2.90	26.62	20.04	3.18	24.48	19.39	3.55
	72 (22.2)	37.02	18.65	2.15	35.35	17.81	2.37	33.44	17.14	2.63	31.02	16.31	2.92	29.02	15.43	3.22	26.68	14.73	3.59
950	57 (13.9)	29.70	28.53	2.14	28.67	26.93	2.34	27.31	25.26	2.60	25.70	23.32	2.92	24.30	21.56	3.21	22.81	19.71	3.58
	62 (16.7)	30.02	27.38	2.14	28.67	26.70	2.34	27.34	25.26	2.60	25.70	23.32	2.92	24.30	21.56	3.21	22.81	19.71	3.58
	63* (17.2)	30.35	22.08	2.14	28.98	21.36	2.34	27.37	20.64	2.60	25.43	19.81	2.92	23.79	18.99	3.21	21.87	18.37	3.58
	67 (19.4)	32.63	23.01	2.16	31.16	22.25	2.37	29.40	21.50	2.63	27.34	20.64	2.92	25.58	19.78	3.21	23.52	19.14	3.58
	72 (22.2)	35.57	18.40	2.18	33.97	17.58	2.39	32.13	16.92	2.66	29.80	16.10	2.95	27.88	15.23	3.24	25.64	14.54	3.61
1125	57 (13.9)	32.35	32.09	2.19	31.24	30.29	2.40	29.76	28.42	2.66	28.00	26.24	2.98	26.47	24.26	3.26	24.86	22.17	3.63
	62 (16.7)	32.71	31.12	2.19	31.24	30.04	2.40	29.79	28.42	2.66	28.00	26.24	2.98	26.47	24.26	3.26	24.86	22.17	3.63
	63* (17.2)	33.07	24.85	2.19	31.58	24.03	2.40	29.82	23.22	2.66	27.70	22.29	2.98	25.92	21.36	3.26	23.83	20.67	3.63
	67 (19.4)	35.55	25.88	2.21	33.95	25.03	2.42	32.03	24.19	2.69	29.79	23.22	2.98	27.87	22.25	3.26	25.62	21.53	3.63
	72 (22.2)	38.75	20.70	2.23	37.01	19.78	2.45	35.01	19.04	2.71	32.47	18.11	3.00	30.37	17.13	3.30	27.93	16.36	3.67

* At 75°F (23.9 °C) entering dry bulb—Tennessee Valley Authority [TVA] rating conditions; all others at 80°F (26.7 °C) entering dry bulb. See Legend and Notes.

30 Heating Extended Performance Table -10-60°F (-23.3-15.6°C)

INDOOR AIR		OUTDOOR COIL ENTERING AIR TEMPERATURES°F (°C)																							
		-10 (-23.3)			0 (-17.8)			10 (-12.2)			20 (-6.7)			30 (-1.1)			40 (4.4)			50 (10)			60 (15.6)		
EDB °F (°C)	CFM	Capacity MBtuh		Total Sys KW	Capacity MBtuh		Total Sys KW	Capacity MBtuh		Total Sys KW	Capacity MBtuh		Total Sys KW	Capacity MBtuh		Total Sys KW	Capacity MBtuh		Total Sys KW	Capacity MBtuh		Total Sys KW	Capacity MBtuh		Total Sys KW
		Total	Integ		Total	Integ		Total	Integ		Total	Integ		Total	Integ		Total	Integ		Total	Integ		Total	Integ	
65°F (18.3°C)	875	10.1	9.3	1.91	13.4	12.3	1.97	16.9	15.6	2.05	20.0	18.1	2.12	23.5	20.6	2.20	27.4	27.4	2.31	31.7	31.7	2.43	35.7	35.7	2.59
	950	10.2	9.4	1.89	13.5	12.4	1.94	17.1	15.7	2.01	20.2	18.3	2.08	23.7	20.8	2.16	27.7	27.7	2.26	32.0	32.0	2.38	36.0	36.0	2.53
	1125	10.4	9.5	1.97	13.7	12.6	2.03	17.3	15.9	2.10	20.4	18.5	2.16	23.9	20.9	2.23	27.9	27.9	2.33	32.4	32.4	2.44	36.2	36.2	2.58
70°F (21.1°C)	875	9.8	9.0	2.00	13.0	12.0	2.06	16.5	15.2	2.14	19.5	17.7	2.21	22.9	20.0	2.29	26.7	26.7	2.41	30.9	30.9	2.54	34.7	34.7	2.71
	950	9.9	9.1	1.96	13.1	12.1	2.03	16.7	15.3	2.10	19.7	17.8	2.17	23.1	20.2	2.24	27.0	27.0	2.35	31.2	31.2	2.48	35.1	35.1	2.64
	1125	10.1	9.3	2.05	13.3	12.3	2.11	16.8	15.5	2.18	19.9	18.0	2.24	23.3	20.4	2.31	27.2	27.2	2.42	31.5	31.5	2.53	35.3	35.3	2.69
75°F (23.9°C)	875	9.6	8.8	2.08	12.7	11.7	2.15	16.1	14.9	2.23	19.1	17.3	2.30	22.6	19.8	2.39	26.5	26.5	2.51	30.6	30.6	2.64	34.4	34.4	2.82
	950	9.7	8.9	2.04	12.9	11.8	2.11	16.3	15.0	2.18	19.3	17.5	2.25	22.9	20.0	2.33	26.7	26.7	2.45	30.9	30.9	2.58	34.7	34.7	2.74
	1125	9.9	9.1	2.12	13.1	12.0	2.18	16.5	15.2	2.25	19.5	17.7	2.32	23.1	20.2	2.40	26.9	26.9	2.51	31.2	31.2	2.63	34.9	34.9	2.79

Manufacturer reserves the right to change, at any time, specifications and designs without notice and without obligations.

Performance Data

36 Cooling Extended Performance Table

EVAPORATOR AIR		CONDENSER ENTERING AIR TEMPERATURES °F (°C)																	
		75 (23.9)			85 (29.4)			95 (35)			105 (40.6)			115 (46.1)			125 (51.7)		
CFM	EWB °F (°C)	Capacity MBtuh		Total Sys KW	Capacity MBtuh		Total Sys KW	Capacity MBtuh		Total Sys KW	Capacity MBtuh		Total Sys KW	Capacity MBtuh		Total Sys KW	Capacity MBtuh		Total Sys KW
		Total	Sens		Total	Sens		Total	Sens		Total	Sens		Total	Sens		Total	Sens	
1050	57 (13.9)	33.58	33.58	2.41	32.42	32.42	2.65	30.88	30.88	2.95	29.06	29.06	3.31	27.47	27.47	3.64	25.79	25.79	4.06
	62 (16.7)	34.88	33.38	2.41	33.31	32.56	2.65	31.76	30.80	2.95	29.86	28.44	3.31	28.23	26.29	3.64	26.50	24.03	4.06
	63* (17.2)	35.57	26.93	2.41	33.97	26.05	2.65	32.08	25.16	2.95	29.80	24.16	3.31	27.88	23.15	3.64	25.64	22.40	4.06
	67 (19.4)	38.25	28.05	2.44	36.53	27.13	2.68	34.46	26.21	2.98	32.05	25.16	3.31	29.98	24.12	3.64	27.57	23.33	4.06
	72 (22.2)	41.69	22.44	2.46	39.82	21.43	2.70	37.66	20.63	3.01	34.93	19.63	3.34	32.68	18.57	3.68	30.05	17.73	4.10
1150	57 (13.9)	33.74	33.74	2.44	32.57	32.57	2.68	31.03	30.67	2.98	29.20	28.31	3.34	27.61	26.17	3.67	25.92	23.93	4.09
	62 (16.7)	34.11	33.23	2.44	32.57	32.42	2.68	31.06	30.67	2.98	29.20	28.31	3.34	27.61	26.17	3.67	25.92	23.93	4.09
	63* (17.2)	34.48	26.81	2.44	32.93	25.93	2.68	31.10	25.06	2.98	28.89	24.05	3.34	27.02	23.05	3.67	24.85	22.30	4.09
	67 (19.4)	37.07	27.93	2.47	35.40	27.01	2.71	33.40	26.10	3.01	31.06	25.06	3.34	29.06	24.01	3.67	26.72	23.23	4.09
	72 (22.2)	40.41	22.34	2.49	38.59	21.34	2.74	36.51	20.54	3.04	33.86	19.54	3.37	31.67	18.49	3.71	29.12	17.65	4.13
1350	57 (13.9)	36.44	36.44	2.51	35.18	35.18	2.75	33.51	33.51	3.04	31.53	31.53	3.41	29.81	29.19	3.74	27.99	26.68	4.16
	62 (16.7)	36.84	36.84	2.51	35.18	35.18	2.75	33.55	33.55	3.04	31.53	31.53	3.41	29.81	29.19	3.74	27.99	26.68	4.16
	63* (17.2)	37.24	29.90	2.51	35.56	28.92	2.75	33.58	27.94	3.04	31.20	26.83	3.41	29.19	25.71	3.74	26.84	24.87	4.16
	67 (19.4)	40.04	31.14	2.53	38.24	30.13	2.77	36.07	29.11	3.07	33.55	27.94	3.41	31.38	26.78	3.74	28.86	25.91	4.16
	72 (22.2)	43.64	24.92	2.56	41.68	23.80	2.80	39.43	22.91	3.10	36.57	21.80	3.44	34.21	20.62	3.77	31.45	19.69	4.20

* At 75°F (23.9 °C) entering dry bulb—Tennessee Valley Authority [TVA] rating conditions; all others at 80°F (26.7 °C) entering dry bulb. See Legend and Notes.

36 Heating Extended Performance Table -10-60°F (-23.3-15.6°C)

INDOOR AIR		OUTDOOR COIL ENTERING AIR TEMPERATURES °F (°C)																							
		-10 (-23.3)			0 (-17.8)			10 (-12.2)			20 (-6.7)			30 (-1.1)			40 (4.4)			50 (10)			60 (15.6)		
EDB °F (°C)	CFM	Capacity MBtuh		Total Sys KW	Capacity MBtuh		Total Sys KW	Capacity MBtuh		Total Sys KW	Capacity MBtuh		Total Sys KW	Capacity MBtuh		Total Sys KW	Capacity MBtuh		Total Sys KW	Capacity MBtuh		Total Sys KW	Capacity MBtuh		Total Sys KW
		Total	Integ		Total	Integ		Total	Integ		Total	Integ		Total	Integ		Total	Integ		Total	Integ		Total	Integ	
65°F (18.3°C)	1050	11.7	10.8	2.10	15.6	14.3	2.16	19.7	18.2	2.25	23.4	21.2	2.32	27.4	24.0	2.41	32.0	32.0	2.53	37.0	37.0	2.67	41.6	41.6	2.85
	1150	11.9	10.9	2.09	15.7	14.5	2.15	19.9	18.4	2.23	23.6	21.4	2.30	27.7	24.2	2.38	32.4	32.4	2.50	37.4	37.4	2.63	42.1	42.1	2.80
	1350	12.1	11.1	2.19	16.0	14.7	2.25	20.2	18.6	2.33	23.8	21.6	2.39	27.9	24.4	2.47	32.6	32.5	2.58	37.8	37.8	2.71	42.3	42.3	2.87
70°F (21.1°C)	1050	11.4	10.5	2.19	15.2	14.0	2.26	19.2	17.7	2.35	22.8	20.6	2.43	26.7	23.4	2.52	31.2	31.2	2.64	36.0	36.0	2.79	40.5	40.5	2.98
	1150	11.6	10.6	2.17	15.3	14.1	2.24	19.4	17.9	2.32	23.0	20.8	2.40	27.0	23.6	2.48	31.5	31.5	2.60	36.4	36.4	2.74	41.0	41.0	2.92
	1350	11.8	10.8	2.27	15.5	14.3	2.34	19.6	18.1	2.41	23.2	21.0	2.49	27.2	23.8	2.57	31.7	31.7	2.68	36.8	36.8	2.81	41.2	41.2	2.98
75°F (23.9°C)	1050	11.2	10.3	2.28	14.9	13.7	2.35	18.8	17.3	2.44	22.3	20.2	2.53	26.4	23.1	2.62	30.9	30.9	2.75	35.7	35.7	2.91	40.1	40.1	3.10
	1150	11.3	10.4	2.26	15.0	13.8	2.33	19.0	17.5	2.41	22.5	20.4	2.49	26.7	23.4	2.58	31.2	31.2	2.71	36.0	36.0	2.85	40.5	40.5	3.03
	1350	11.5	10.6	2.35	15.2	14.0	2.42	19.3	17.7	2.50	22.8	20.6	2.58	26.9	23.6	2.66	31.4	31.4	2.78	36.4	36.4	2.92	40.8	40.8	3.09

Manufacturer reserves the right to change, at any time, specifications and designs without notice and without obligations.

Performance Data

42 Cooling Extended Performance Table

EVAPORATOR AIR		CONDENSER ENTERING AIR TEMPERATURES °F (°C)																	
		75 (23.9)			85 (29.4)			95 (35)			105 (40.6)			115 (46.1)			125 (51.7)		
CFM	EWB °F (°C)	Capacity MBtuh		Total Sys KW	Capacity MBtuh		Total Sys KW	Capacity MBtuh		Total Sys KW	Capacity MBtuh		Total Sys KW	Capacity MBtuh		Total Sys KW	Capacity MBtuh		Total Sys KW
		Total	Sens		Total	Sens		Total	Sens		Total	Sens		Total	Sens		Total	Sens	
1225	57 (13.9)	39.96	39.96	2.86	38.58	38.58	3.14	36.75	36.75	3.49	34.59	34.59	3.92	32.70	32.70	4.32	30.70	30.70	4.82
	62 (16.7)	41.51	38.26	2.86	39.64	37.31	3.14	37.81	35.30	3.49	35.54	32.59	3.92	33.60	30.13	4.32	31.55	27.54	4.82
	63* (17.2)	42.34	30.86	2.86	40.43	29.85	3.14	38.18	28.84	3.49	35.47	27.69	3.92	33.19	26.54	4.32	30.52	25.67	4.82
	67 (19.4)	45.53	32.15	2.89	43.48	31.10	3.17	41.01	30.04	3.53	38.14	28.84	3.92	35.68	27.64	4.32	32.81	26.74	4.82
	72 (22.2)	49.62	25.72	2.92	47.39	24.57	3.21	44.83	23.64	3.57	41.58	22.50	3.96	38.89	21.28	4.36	35.76	20.32	4.86
1350	57 (13.9)	40.40	39.94	2.90	39.01	37.70	3.18	37.16	35.37	3.53	34.97	32.65	3.96	33.06	30.18	4.36	31.04	27.59	4.86
	62 (16.7)	40.85	38.33	2.90	39.01	37.38	3.18	37.20	35.37	3.53	34.97	32.65	3.96	33.06	30.18	4.36	31.04	27.59	4.86
	63* (17.2)	41.29	30.92	2.90	39.43	29.91	3.18	37.24	28.90	3.53	34.60	27.74	3.96	32.36	26.58	4.36	29.76	25.72	4.86
	67 (19.4)	44.40	32.21	2.93	42.40	31.15	3.21	40.00	30.10	3.57	37.20	28.90	3.96	34.80	27.69	4.36	32.00	26.79	4.86
	72 (22.2)	48.40	25.77	2.96	46.22	24.61	3.25	43.72	23.69	3.61	40.55	22.54	4.00	37.93	21.32	4.40	34.88	20.36	4.90
1575	57 (13.9)	43.37	43.37	2.97	41.87	41.78	3.25	39.89	39.20	3.61	37.53	36.19	4.03	35.48	33.45	4.43	33.32	30.58	4.93
	62 (16.7)	43.84	42.93	2.97	41.87	41.43	3.25	39.93	39.20	3.61	37.53	36.19	4.03	35.48	33.45	4.43	33.32	30.58	4.93
	63* (17.2)	44.32	34.27	2.97	42.32	33.15	3.25	39.97	32.03	3.61	37.13	30.75	4.03	34.74	29.46	4.43	31.94	28.50	4.93
	67 (19.4)	47.66	35.70	3.00	45.51	34.53	3.29	42.93	33.36	3.64	39.93	32.03	4.03	37.35	30.69	4.43	34.35	29.69	4.93
	72 (22.2)	51.95	28.56	3.03	49.61	27.28	3.32	46.93	26.25	3.68	43.52	24.98	4.07	40.71	23.63	4.47	37.44	22.57	4.98

* At 75°F (23.9 °C) entering dry bulb—Tennessee Valley Authority [TVA] rating conditions; all others at 80°F (26.7 °C) entering dry bulb. See Legend and Notes.

42 Heating Extended Performance Table -10-60°F (-23.3-15.6°C)

INDOOR AIR		OUTDOOR COIL ENTERING AIR TEMPERATURES °F (°C)																							
		-10 (-23.3)			0 (-17.8)			10 (-12.2)			20 (-6.7)			30 (-1.1)			40 (4.4)			50 (10)			60 (15.6)		
EDB °F (°C)	CFM	Capacity MBtuh		Total Sys KW	Capacity MBtuh		Total Sys KW	Capacity MBtuh		Total Sys KW	Capacity MBtuh		Total Sys KW	Capacity MBtuh		Total Sys KW	Capacity MBtuh		Total Sys KW	Capacity MBtuh		Total Sys KW	Capacity MBtuh		Total Sys KW
		Total	Integ		Total	Integ		Total	Integ		Total	Integ		Total	Integ		Total	Integ		Total	Integ		Total	Integ	
65°F (18.3°C)	1225	13.4	12.3	2.45	17.8	16.4	2.53	22.6	20.8	2.63	26.7	24.2	2.72	31.3	27.4	2.82	36.6	36.6	2.96	42.3	42.3	3.13	47.6	47.6	3.34
	1350	13.6	12.5	2.45	18.0	16.6	2.53	22.8	21.0	2.62	27.0	24.4	2.70	31.6	27.7	2.80	37.0	37.0	2.93	42.7	42.7	3.09	48.1	48.1	3.29
	1575	13.8	12.7	2.56	18.2	16.8	2.63	23.0	21.2	2.72	27.2	24.6	2.80	31.9	27.9	2.89	37.2	37.2	3.02	43.2	43.2	3.17	48.3	48.3	3.36
70°F (21.1°C)	1225	13.1	12.0	2.56	17.3	15.9	2.64	22.0	20.2	2.75	26.0	23.5	2.84	30.5	26.7	2.95	35.6	35.6	3.09	41.2	41.2	3.27	46.3	46.3	3.48
	1350	13.2	12.1	2.55	17.5	16.1	2.63	22.2	20.4	2.73	26.3	23.8	2.81	30.8	27.0	2.92	36.0	36.0	3.06	41.6	41.6	3.22	46.8	46.8	3.42
	1575	13.4	12.4	2.66	17.8	16.3	2.73	22.4	20.7	2.82	26.5	24.0	2.91	31.0	27.2	3.00	36.2	36.2	3.14	42.0	42.0	3.29	47.0	47.0	3.49
75°F (23.9°C)	1225	12.8	11.8	2.67	17.0	15.6	2.76	21.5	19.8	2.86	25.5	23.1	2.96	30.2	26.4	3.07	35.3	35.3	3.22	40.8	40.8	3.40	45.9	45.9	3.63
	1350	12.9	11.9	2.65	17.2	15.8	2.74	21.8	20.0	2.84	25.8	23.3	2.93	30.5	26.7	3.03	35.6	35.6	3.18	41.2	41.2	3.35	46.3	46.3	3.56
	1575	13.2	12.1	2.75	17.4	16.0	2.83	22.0	20.2	2.93	26.0	23.5	3.01	30.7	26.9	3.11	35.9	35.9	3.25	41.6	41.6	3.41	46.6	46.6	3.62

Manufacturer reserves the right to change, at any time, specifications and designs without notice and without obligations.

Performance Data

48 Cooling Extended Performance Table

EVAPORATOR AIR		CONDENSER ENTERING AIR TEMPERATURES deg F																	
		75 (23.9)			85 (29.4)			95 (35)			105 (40.6)			115 (46.1)			125 (51.7)		
CFM	EWB	Capacity MBtuh		Total System KW	Capacity MBtuh		Total System KW	Capacity MBtuh		Total System KW	Capacity MBtuh		Total System KW	Capacity MBtuh		Total System KW	Capacity MBtuh		Total System KW
		Total	Sens		Total	Sens		Total	Sens		Total	Sens		Total	Sens		Total	Sens	
1400	57 (13.9)	45.28	45.28	3.26	43.71	43.71	3.58	41.64	41.64	3.99	39.19	39.19	4.48	37.05	37.05	4.93	34.79	34.79	5.50
	62 (16.7)	47.04	44.61	3.26	44.92	43.51	3.58	42.84	41.17	3.99	40.27	38.01	4.48	38.07	35.13	4.93	35.74	32.12	5.50
	63* (17.2)	47.97	35.99	3.26	45.81	34.81	3.58	43.26	33.63	3.99	40.19	32.29	4.48	37.60	30.94	4.93	34.57	29.93	5.50
	67 (19.4)	51.58	37.49	3.29	49.26	36.26	3.62	46.47	35.04	4.03	43.22	33.63	4.48	40.43	32.23	4.93	37.18	31.18	5.50
	72 (22.2)	56.23	29.99	3.32	53.69	28.65	3.65	50.79	27.57	4.07	47.11	26.23	4.52	44.07	24.82	4.98	40.52	23.70	5.55
1600	57 (13.9)	47.47	47.47	3.32	45.83	45.59	3.64	43.66	42.77	4.05	41.09	39.49	4.54	38.85	36.50	4.99	36.47	33.37	5.56
	62 (16.7)	48.00	46.35	3.32	45.83	45.21	3.64	43.71	42.77	4.05	41.09	39.49	4.54	38.85	36.50	4.99	36.47	33.37	5.56
	63* (17.2)	48.52	37.39	3.32	46.33	36.17	3.64	43.76	34.94	4.05	40.65	33.55	4.54	38.03	32.15	4.99	34.97	31.10	5.56
	67 (19.4)	52.17	38.95	3.35	49.82	37.67	3.68	47.00	36.40	4.09	43.71	34.94	4.54	40.89	33.49	4.99	37.60	32.40	5.56
	72 (22.2)	56.87	31.16	3.39	54.30	29.76	3.72	51.37	28.65	4.13	47.64	27.26	4.59	44.57	25.79	5.04	40.98	24.62	5.62
1800	57 (13.9)	49.14	49.14	3.38	47.44	47.44	3.71	45.19	45.19	4.11	42.53	42.20	4.60	40.21	39.01	5.05	37.75	35.66	5.63
	62 (16.7)	49.68	49.68	3.38	47.44	47.44	3.71	45.24	45.24	4.11	42.53	42.20	4.60	40.21	39.01	5.05	37.75	35.66	5.63
	63* (17.2)	50.22	39.96	3.38	47.95	38.65	3.71	45.29	37.35	4.11	42.07	35.85	4.60	39.36	34.36	5.05	36.19	33.24	5.63
	67 (19.4)	54.00	41.63	3.42	51.56	40.26	3.75	48.65	38.90	4.15	45.24	37.35	4.60	42.32	35.79	5.05	38.92	34.62	5.63
	72 (22.2)	58.86	33.30	3.45	56.20	31.81	3.78	53.17	30.62	4.19	49.31	29.13	4.65	46.13	27.56	5.10	42.42	26.31	5.68

* At 75°F (23.9 °C) entering dry bulb—Tennessee Valley Authority [TVA] rating conditions; all others at 80°F (26.7 °C) entering dry bulb. See Legend and Notes.

48 Heating Extended Performance Table -10-60°F (-23.3-15.6°C)

INDOOR AIR		OUTDOOR COIL ENTERING AIR TEMPERATURES °F (°C)																							
		-10 (-23.3)			0 (-17.8)			10 (-12.2)			20 (-6.7)			30 (-1.1)			40 (4.4)			50 (10)			60 (15.6)		
EDB	CFM	Capacity MBtuh		Total Sys KW	Capacity MBtuh		Total Sys KW	Capacity MBtuh		Total Sys KW	Capacity MBtuh		Total Sys KW	Capacity MBtuh		Total Sys KW	Capacity MBtuh		Total Sys KW	Capacity MBtuh		Total Sys KW	Capacity MBtuh		Total Sys KW
		Total	Integ		Total	Integ		Total	Integ		Total	Integ		Total	Integ		Total	Integ		Total	Integ		Total	Integ	
65°F (18.3°C)	1400	15.4	14.2	2.75	20.5	18.8	2.84	25.9	23.9	2.95	30.7	27.8	3.06	36.0	31.5	3.18	42.1	42.1	3.34	48.6	48.6	3.53	54.7	54.7	3.77
	1600	15.6	14.3	2.81	20.7	19.0	2.90	26.2	24.1	3.01	31.0	28.1	3.10	36.4	31.9	3.21	42.5	42.5	3.37	49.1	49.1	3.55	55.3	55.3	3.77
	1800	15.8	14.5	2.88	20.9	19.2	2.96	26.4	24.3	3.06	31.3	28.3	3.16	36.6	32.1	3.26	42.7	42.7	3.41	49.6	49.6	3.58	55.5	55.5	3.79
70°F (21.1°C)	1400	15.0	13.8	2.87	19.9	18.3	2.97	25.3	23.2	3.09	29.9	27.1	3.19	35.0	30.7	3.32	41.0	41.0	3.49	47.3	47.3	3.68	53.3	53.3	3.94
	1600	15.2	14.0	2.93	20.1	18.5	3.02	25.5	23.5	3.13	30.2	27.4	3.23	35.4	31.0	3.35	41.4	41.4	3.51	47.8	47.8	3.69	53.8	53.8	3.93
	1800	15.4	14.2	2.99	20.4	18.7	3.08	25.7	23.7	3.18	30.4	27.5	3.28	35.6	31.2	3.39	41.6	41.6	3.54	48.3	48.3	3.72	54.0	54.0	3.94
75°F (23.9°C)	1400	14.7	13.5	3.00	19.5	18.0	3.10	24.8	22.8	3.22	29.3	26.5	3.33	34.7	30.4	3.46	40.6	40.6	3.64	46.9	46.9	3.84	52.7	52.7	4.10
	1600	14.9	13.7	3.05	19.7	18.2	3.14	25.0	23.0	3.26	29.6	26.8	3.36	35.1	30.7	3.48	41.0	41.0	3.65	47.4	47.4	3.84	53.3	53.3	4.09
	1800	15.1	13.9	3.10	20.0	18.4	3.19	25.2	23.2	3.30	29.8	27.0	3.40	35.3	30.9	3.52	41.2	41.2	3.67	47.9	47.9	3.86	53.5	53.5	4.09

Manufacturer reserves the right to change, at any time, specifications and designs without notice and without obligations.

Performance Table

60 Cooling Extended Performance Table

EVAPORATOR AIR		CONDENSER ENTERING AIR TEMPERATURES deg F																	
		75			85			95			105			115			125		
CFM	EWB	Capacity MBtuh		Total System KW	Capacity MBtuh		Total System KW	Capacity MBtuh		Total System KW	Capacity MBtuh		Total System KW	Capacity MBtuh		Total System KW	Capacity MBtuh		Total System KW
		Total	Sens		Total	Sens		Total	Sens		Total	Sens		Total	Sens		Total	Sens	
1600	57	52.32	52.32	3.95	50.51	50.51	4.34	48.12	48.12	4.82	45.28	45.28	5.41	42.81	42.45	5.95	40.19	38.73	6.64
	62	54.43	49.87	3.95	51.98	48.65	4.34	49.57	46.02	4.82	46.60	42.49	5.41	44.05	37.14	5.95	41.36	33.89	6.64
	63	55.54	40.23	3.95	53.04	38.92	4.34	50.09	37.60	4.82	46.54	36.10	5.41	43.53	32.71	5.95	40.03	31.59	6.64
	67	59.72	41.91	3.99	57.03	40.54	4.38	53.81	39.17	4.87	50.04	37.60	5.41	46.81	34.08	5.95	43.04	32.90	6.64
	72	65.10	33.53	4.03	61.01	32.03	4.42	55.35	30.83	4.92	54.54	29.33	5.47	51.02	26.24	6.01	46.92	25.00	6.71
1750	57	55.56	54.13	3.99	53.64	51.10	4.38	51.10	47.94	4.87	48.08	44.26	5.46	45.46	38.69	6.00	42.68	35.30	6.69
	62	56.17	51.95	3.99	53.64	50.67	4.38	51.15	47.94	4.87	48.08	44.26	5.46	45.46	38.69	6.00	42.68	35.30	6.69
	63	56.78	41.91	3.99	54.22	40.54	4.38	51.21	39.17	4.87	47.57	37.60	5.46	44.50	34.08	6.00	40.92	32.90	6.69
	67	61.05	43.66	4.03	58.30	42.23	4.43	55.00	40.80	4.92	51.15	39.17	5.46	47.85	35.50	6.00	44.00	34.27	6.69
	72	66.54	34.92	4.07	63.55	33.36	4.47	60.12	32.11	4.97	55.75	30.55	5.52	52.16	27.33	6.06	47.96	26.05	6.76
2000	57	58.41	58.41	4.07	56.39	55.48	4.46	53.72	52.05	4.95	50.55	48.05	5.54	47.80	42.01	6.08	44.87	38.33	6.77
	62	59.05	57.00	4.07	56.39	55.02	4.46	53.78	52.05	4.95	50.55	48.05	5.54	47.80	42.01	6.08	44.87	38.33	6.77
	63	59.70	45.50	4.07	57.01	44.01	4.46	53.84	42.53	4.95	50.02	40.82	5.54	46.79	37.00	6.08	43.02	35.72	6.77
	67	64.19	47.40	4.11	61.30	45.85	4.51	57.83	44.30	5.00	53.78	42.53	5.54	50.31	38.54	6.08	46.26	37.21	6.77
	72	69.97	37.92	4.15	66.82	36.22	4.55	63.21	34.86	5.05	58.62	33.17	5.60	54.84	29.67	6.14	50.43	28.28	6.84

60 Heating Extended Performance Table -10-60°F (-23.3-15.6°C)

INDOOR AIR		OUTDOOR COIL ENTERING AIR TEMPERATURE																							
		-10°F (-23.3°C)			0°F (-17.8°C)			10°F (-12.2°C)			20°F (-6.7°C)			30°F (-1.1°C)			40°F (4.4°C)			50°F (8.3°C)			60°F (15.6°C)		
EDB	CFM	Capacity (Mbtuh)		Total Sys kW	Capacity (Mbtuh)		Total Sys kW	Capacity (Mbtuh)		Total Sys kW	Capacity (Mbtuh)		Total Sys kW	Capacity (Mbtuh)		Total Sys kW	Capacity (Mbtuh)		Total Sys kW	Capacity (Mbtuh)		Total Sys kW	Capacity (Mbtuh)		Total Sys kW
		Total	Integ		Total	Integ		Total	Integ		Total	Integ		Total	Integ		Total	Integ		Total	Integ		Total	Integ	
65°F (18.3°C)	1600	17.4	16.0	3.59	23.6	21.7	3.71	30.4	28.0	3.86	36.9	33.4	3.99	43.5	38.1	4.05	50.4	52.1	4.34	60.3	60.3	4.75	67.8	67.8	5.07
	1750	17.6	16.2	3.55	23.9	22.0	3.66	30.7	28.3	3.80	37.3	33.7	3.93	43.9	38.5	3.98	50.9	50.9	4.26	60.9	60.9	4.65	68.5	68.5	4.95
	2000	17.8	16.4	3.63	24.2	22.2	3.74	31.0	28.5	3.87	37.6	34.0	3.99	44.2	38.7	4.04	51.2	52.9	4.31	61.5	61.5	4.67	68.8	68.8	4.96
70°F (21.1°C)	1600	16.9	15.6	3.74	23.0	21.2	3.87	29.6	27.2	4.02	35.9	32.5	4.16	42.3	37.1	4.23	49.1	50.8	4.53	58.7	58.7	4.96	66.0	66.0	5.29
	1750	17.1	15.7	3.70	23.3	21.4	3.82	29.9	27.5	3.96	36.3	32.9	4.09	42.8	37.4	4.15	49.6	49.6	4.44	59.3	59.3	4.84	66.7	66.7	5.15
	2000	17.4	16.0	3.77	23.5	21.6	3.88	30.2	27.8	4.02	36.6	33.1	4.15	43.0	37.7	4.20	49.9	51.5	4.47	59.9	59.9	4.86	67.0	67.0	5.15
75°F (23.9°C)	1600	16.6	15.3	3.90	22.5	20.7	4.03	29.0	26.7	4.19	35.2	31.9	4.34	41.9	36.7	4.40	48.6	50.3	4.72	58.1	58.1	5.16	65.3	65.3	5.51
	1750	16.8	15.4	3.84	22.8	21.0	3.97	29.3	27.0	4.12	35.6	32.2	4.26	42.3	37.1	4.32	49.1	49.1	4.61	58.7	58.7	5.04	66.0	66.0	5.36
	2000	17.0	15.7	3.91	23.1	21.2	4.03	29.6	27.2	4.17	35.9	32.4	4.30	42.6	37.3	4.36	49.4	51.0	4.64	59.3	59.3	5.04	66.3	66.3	5.35

Manufacturer reserves the right to change, at any time, specifications and designs without notice and without obligations.

Performance Data (Continued)

LEGEND

BF — Bypass Factor
edb — Entering Dry-Bulb
Ewb — Entering Wet-Bulb
kW — Total Unit Power Input
SHC — Sensible Heat Capacity (1000 Btuh)
TC — Total Capacity (1000 Btuh) (net)
rh —Relative Humidity

COOLING NOTES:

1. Ratings are net; they account for the effects of the evaporator-fan motor power and heat.
2. Direct interpolation is permissible. Do not extrapolate.
3. The following formulas may be used:

$$^{t}ldb = {}^{t}edb - \frac{\text{Sensible capacity (Btuh)}}{1.10 \times CFM}$$

$^{t}lwb =$ Wet-bulb temperature corresponding to enthalpy air leaving evaporator coil (^{h}lwb)

$$^{h}lwb = {}^{h}ewb - \frac{\text{total capacity (Btuh)}}{(4.5 \times CFM)}$$

Where: ^{h}ewb = Enthalpy of air entering evaporator coil

4. The SHC is based on 80°F (26.6°C) edb temperature of air entering evaporator coil. Below 80°F (26.6°C) edb, subtract (corr factor x CFM) from SHC. Above 80°F (26.6°C) edb, add (corr factor x CFM) to SHC. Correction Factor = 1.10 x (1 + BF) x (edb - 80).
5. Integrated capacity is maximum (instantaneous) capacity less the effect of frost on the outdoor coil and the heat required to defrost it.

Multiplication Factors

HEATER VOLT RATING	VOLTAGE DISTRIBUTION	MULTIPLICATION FACTOR
240	200 208 230 240	0.69 0.75 0.92 1.00
480	460	0.92

Manufacturer reserves the right to change, at any time, specifications and designs without notice and without obligations.

Dry Coil Air Delivery* - Horizontal and Downflow Discharge Sizes 24-60

Unit Size	Motor Speed	Tap		ESP (in. W.C.)									
				0.1	0.2	0.3	0.4	0.5	0.6	0.7	0.8	0.9	1
24	Low	Blue	CFM	723	563	308	---	---	---	---	---	---	---
			BHP	0.09	0.07	0.06	---	---	---	---	---	---	---
	Med-Low	Pink	CFM	829	766	696	606	538	470	406	341	283	220
			BHP	0.11	0.12	0.12	0.13	0.13	0.14	0.14	0.15	0.15	0.16
	Medium**	Red	CFM	1065	1016	966	914	857	783	716	667	617	566
			BHP	0.19	0.20	0.20	0.21	0.22	0.23	0.23	0.24	0.24	0.25
	Med-High	Orange	CFM	1097	1048	999	949	893	833	751	701	651	603
			BHP	0.21	0.21	0.22	0.22	0.23	0.24	0.25	0.25	0.26	0.26
	High	Black	CFM	1215	1173	1129	1085	1038	989	936	854	803	760
			BHP	0.26	0.27	0.28	0.28	0.29	0.30	0.31	0.32	0.32	0.33
30	Low	Blue	CFM	643	552	455	348	225	---	---	---	---	---
			BHP	0.09	0.10	0.11	0.11	0.11	---	---	---	---	---
	Med-Low	Pink	CFM	817	744	673	597	516	431	325	190	---	---
			BHP	0.14	0.15	0.15	0.16	0.17	0.17	0.18	0.18	---	---
	Medium	Red	CFM	1159	1104	1045	990	937	878	821	759	693	618
			BHP	0.31	0.32	0.33	0.33	0.34	0.35	0.36	0.37	0.37	0.38
	Med-High**	Orange	CFM	1201	1147	1095	1037	987	934	877	818	755	671
			BHP	0.34	0.35	0.36	0.37	0.37	0.38	0.39	0.40	0.41	0.40
	High	Black	CFM	1291	1236	1181	1131	1080	1033	978	909	792	661
			BHP	0.41	0.42	0.43	0.43	0.44	0.45	0.46	0.45	0.43	0.40
36	Low	Blue	CFM	1069	1006	955	896	847	800	755	700	649	598
			BHP	0.16	0.17	0.18	0.19	0.20	0.21	0.22	0.23	0.24	0.24
	Med-Low	Pink	CFM	1154	1100	1045	997	936	886	847	804	749	699
			BHP	0.19	0.20	0.21	0.23	0.24	0.24	0.25	0.26	0.27	0.28
	Medium	Red	CFM	1295	1247	1199	1152	1104	1050	997	955	918	875
			BHP	0.26	0.27	0.28	0.29	0.30	0.31	0.32	0.33	0.33	0.34
	Med-High**	Orange	CFM	1421	1374	1328	1283	1236	1188	1137	1089	1042	1011
			BHP	0.32	0.33	0.35	0.36	0.37	0.38	0.39	0.40	0.41	0.41
	High	Black	CFM	1505	1464	1423	1380	1336	1292	1242	1199	1145	1096
			BHP	0.38	0.39	0.40	0.42	0.43	0.43	0.44	0.45	0.46	0.47
42	Low	Blue	CFM	956	899	843	786	729	676	621	558	504	435
			BHP	0.13	0.13	0.14	0.15	0.16	0.16	0.17	0.18	0.18	0.19
	Med-Low	Pink	CFM	1201	1153	1107	1060	1012	965	917	871	828	782
			BHP	0.21	0.22	0.22	0.23	0.24	0.25	0.26	0.27	0.28	0.29
	Medium	Red	CFM	1443	1402	1361	1322	1284	1243	1204	1164	1124	1084
			BHP	0.32	0.33	0.34	0.35	0.36	0.37	0.38	0.39	0.40	0.42
	Med-High**	Orange	CFM	1529	1491	1451	1411	1376	1338	1300	1261	1223	1185
			BHP	0.37	0.39	0.40	0.41	0.42	0.43	0.44	0.45	0.46	0.47
	High	Black	CFM	1604	1565	1529	1490	1455	1421	1385	1348	1310	1274
			BHP	0.42	0.44	0.45	0.46	0.47	0.48	0.49	0.50	0.51	0.52
48	Low	Blue	CFM	641	551	462	385	289	216	163	115	---	---
			BHP	0.05	0.06	0.06	0.07	0.07	0.08	0.08	0.09	---	---
	Med-Low	Pink	CFM	1437	1395	1351	1307	1265	1221	1176	1132	1084	1039
			BHP	0.29	0.30	0.31	0.32	0.33	0.34	0.35	0.36	0.37	0.38
	Medium**	Red	CFM	1771	1735	1699	1664	1627	1592	1557	1522	1486	1450
			BHP	0.51	0.52	0.53	0.55	0.56	0.57	0.58	0.59	0.61	0.62
	Med-High	Orange	CFM	1928	1897	1862	1830	1796	1764	1732	1698	1620	1512
			BHP	0.64	0.65	0.67	0.68	0.69	0.71	0.72	0.73	0.71	0.66
	High	Black	CFM	2212	2167	2124	2061	1976	1892	1794	1699	1567	1438
			BHP	0.97	0.99	1.00	0.97	0.95	0.91	0.86	0.82	0.77	0.71
60	Low	Blue	CFM	641	551	462	385	289	216	163	115	---	---
			BHP	0.05	0.06	0.06	0.07	0.07	0.08	0.08	0.09	---	---
	Med-Low	Pink	CFM	1437	1395	1351	1307	1265	1221	1176	1132	1084	1039
			BHP	0.29	0.30	0.31	0.32	0.33	0.34	0.35	0.36	0.37	0.38
	Medium**	Red	CFM	1914	1881	1848	1814	1780	1748	1716	1681	1619	1512
			BHP	0.62	0.64	0.65	0.67	0.68	0.69	0.71	0.72	0.71	0.66
	Med-High	Orange	CFM	1928	1897	1862	1830	1796	1764	1732	1698	1620	1512
			BHP	0.64	0.65	0.67	0.68	0.69	0.71	0.72	0.73	0.71	0.66
	High	Black	CFM	2212	2167	2124	2061	1976	1892	1794	1699	1567	1438
			BHP	0.97	0.99	1.00	0.97	0.95	0.91	0.86	0.82	0.77	0.71

Shaded areas indicate speed/static combinations that are not permitted for dehumidification speed.

* Air delivery values are without air filter and are for dry coil (See Wet Coil Pressure Drop Table).

** Factory-shipped cooling speed

NOTE: Deduct field-supplied air filter pressure drop and wet coil pressure drop to obtain external static pressure available for ducting.

Filter Pressure Drop Table (IN. W.C.)

Filter Size in. (mm)	Cooling Tons	Standard CFM (SCFM)																
		600	700	800	900	1000	1100	1200	1300	1400	1500	1600	1700	1800	1900	2000	2100	2200
600-1400 CFM 12x20x1+12x20x1 (305x508x25+305x508x25)	2.0, 2.5	0.03	0.04	0.05	0.06	0.06	0.07	0.07	0.08	0.08	-	-	-	-	-	-	-	-
1200-1800CFM 16x24x1+14x24x1 (406x610x25+356x610x25)	3.5	-	-	-	-	0.04	0.05	0.06	0.07	0.08	0.09	0.09	0.10	0.11	0.12	0.12	-	-
1500-2200CFM 16x24x1+18x24x1 (406x610x25+457x610x25)	3.0, 4.0, 5.0	-	-	-	-	-	-	-	-	-	0.04	0.06	0.08	0.10	0.11	0.13	0.14	0.15

Wet Coil Pressure Drop (IN. W.C.)

Unit Size	Standard CFM (SCFM)																
	600	700	800	900	1000	1100	1200	1300	1400	1500	1600	1700	1800	1900	2000	2100	2200
24	0.03	0.04	0.04	0.05	0.06												
30				0.05	0.06	0.07	0.08	0.11									
36				0.06	0.06	0.09	0.10	0.11	0.14								
42					0.05	0.05	0.06	0.07	0.08	0.08	0.09	0.09	0.11				
48							0.04	0.06	0.09	0.10	0.10	0.11	0.12	0.13	0.14		
60										0.06	0.07	0.01	0.08	0.09	0.10	0.12	0.13

Economizer with 1-in. Filter Pressure Drop (IN. W.C.)

Filter Size in. (mm)	Cooling Tons	Standard CFM (SCFM)																
		600	700	800	900	1000	1100	1200	1300	1400	1500	1600	1700	1800	1900	2000	2100	2200
600-1400 CFM 12x20x1+12x20x1 (305x508x25+305x508x25)	2.0, 2.5	-	-	0.08	0.09	0.10	0.11	0.11	0.13	0.14	-	-	-	-	-	-	-	-
1200-1800CFM 16x24x1+14x24x1 (406x610x25+356x610x25)	3.5	-	-	-	-	-	0.09	0.09	0.10	0.12	0.13	0.15	0.17	0.17	0.19	0.21	-	-
1500-2200CFM 16x24x1+18x24x1 (406x610x25+457x610x25)	3.0, 4.0, 5.0	-	-	-	-	-	-	-	-	-	0.15	0.17	0.18	0.20	0.21	0.22	0.23	0.23

Electric Heat Pressure Drop Table (IN. W.C.)
Small Cabinet: 24-30

STATIC	STANDARD CFM (SCFM)											
	500	600	700	800	900	1000	1100	1200	1300	1400	1500	1600
5kw	0.00	0.00	0.00	0.00	0.00	0.00	0.00	0.00	0.02	0.04	0.06	0.07
7.5 kw	0.00	0.00	0.00	0.00	0.00	0.00	0.02	0.03	0.05	0.07	0.08	0.09
10 kw	0.00	0.00	0.00	0.00	0.00	0.02	0.04	0.06	0.07	0.09	0.10	0.11
15 kw	0.00	0.00	0.00	0.02	0.04	0.06	0.08	0.10	0.12	0.14	0.16	0.18
20 kw	0.00	0.00	0.02	0.04	0.06	0.08	0.09	0.11	0.13	0.15	0.17	0.19

Electric Heat Pressure Drop Table (IN. W.C.)
Large Cabinet 36-60

STATIC	STANDARD CFM (SCFM)														
	1100	1200	1300	1400	1500	1600	1700	1800	1900	2000	2100	2200	2300	2400	2500
5kw	0.00	0.00	0.00	0.01	0.02	0.03	0.04	0.05	0.06	0.07	0.08	0.09	0.10	0.11	0.12
7.5 kw	0.00	0.00	0.01	0.02	0.03	0.04	0.05	0.06	0.07	0.08	0.09	0.10	0.11	0.12	0.13
10 kw	0.00	0.00	0.01	0.02	0.03	0.04	0.05	0.06	0.07	0.08	0.09	0.10	0.11	0.12	0.13
15 kw	0.00	0.02	0.03	0.04	0.05	0.06	0.07	0.08	0.09	0.10	0.11	0.12	0.13	0.14	0.15
20 kw	0.02	0.03	0.04	0.05	0.06	0.07	0.08	0.09	0.10	0.11	0.12	0.13	0.14	0.15	0.16

Manufacturer reserves the right to change, at any time, specifications and designs without notice and without obligations.

Typical Piping and Wiring

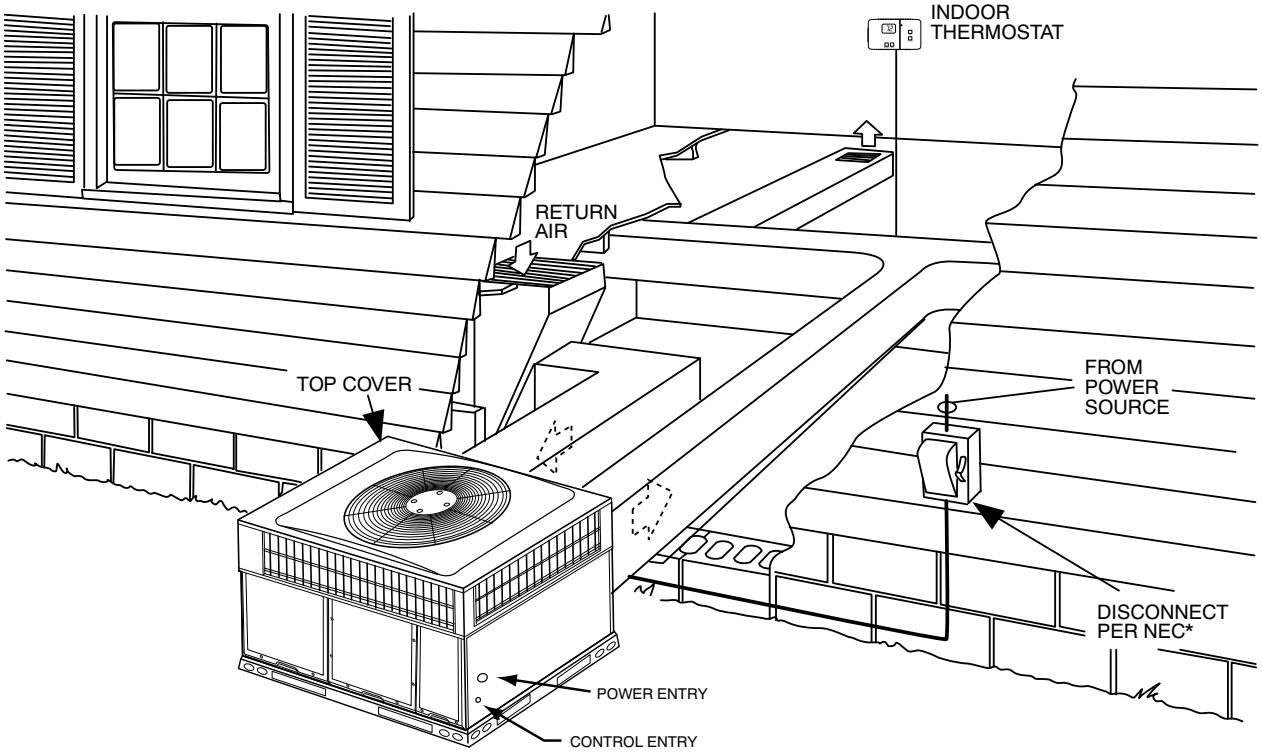

*NEC - National Electrical Code

A09240

Application Data

Condensate trap — A 2-in. (51 mm) condensate trap must be field supplied.

Ductwork — Secure downflow discharge ductwork to roof curb. For horizontal discharge applications, attach ductwork to unit with flanges.

To convert a unit to downflow discharge — Units are equipped with factory-installed inserts in the downflow openings. Removal of the inserts is similar to removing an electrical knock-out. Units installed in horizontal discharge orientation do not require duct covers.

Maximum cooling airflow — To minimize the possibility of condensate blow-off from the evaporator, airflow through the units should not exceed 450 CFM per ton.

Minimum cooling airflow — Minimum cooling airflow is 350 CFM per ton in cooling mode. Airflow can be lower in certain modes when humidity removal is an issue however, low airflow could result in indoor coil freezing and/or refrigerant floodback.

Minimum ambient cooling operation temperature — All standard units have a minimum ambient cooling operating temperature of 40°F (4.4°C). With accessory low ambient temperature kit, units can operate at temperatures down to 0°F (17.8°C).

Maximum operating outdoor air temperature for cooling is 125°F (51.7°C).

Balance Point Worksheet

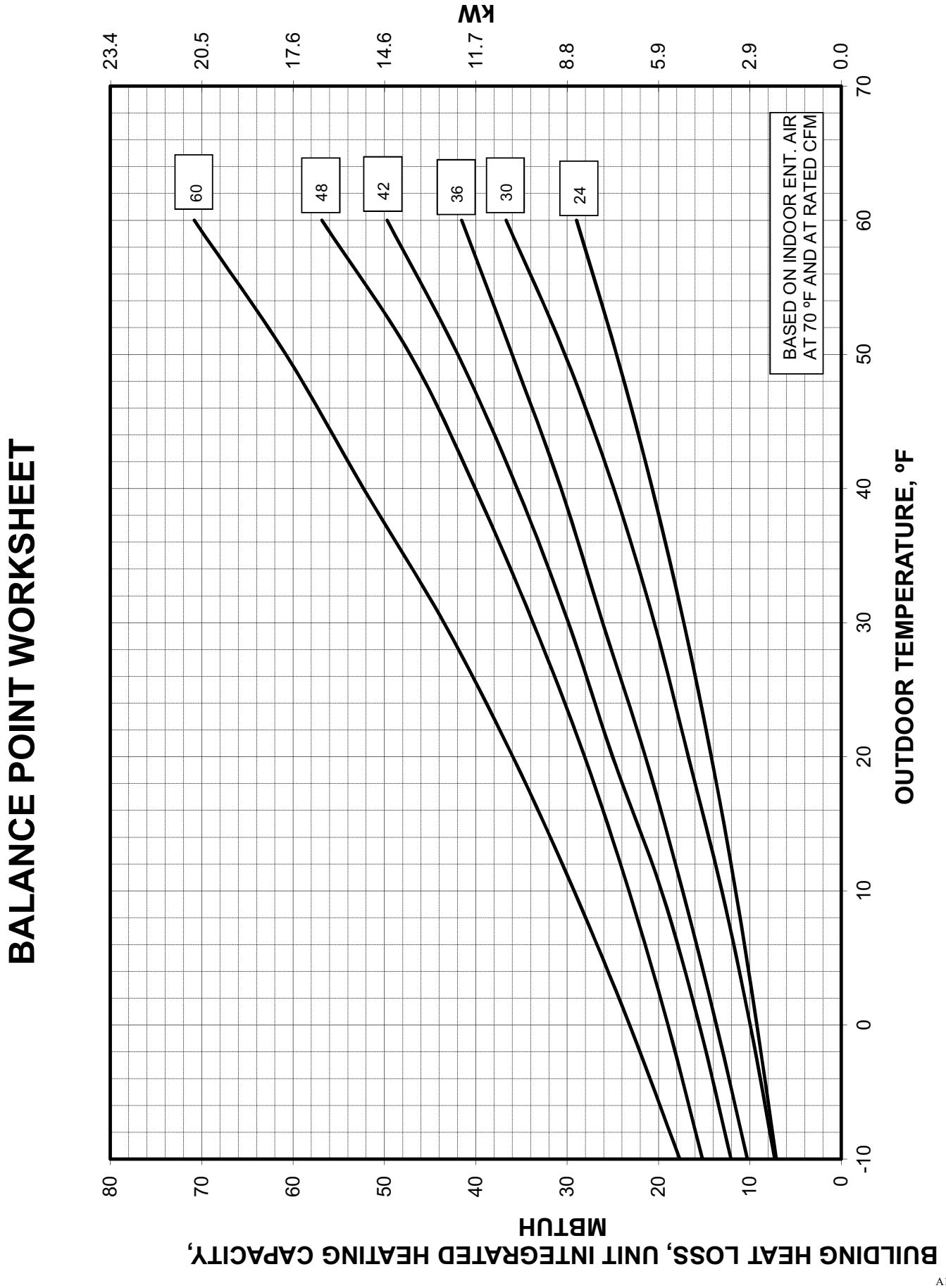

A150725

Electrical Data

MODEL	NOMINAL V-PH-HZ	VOLTAGE RANGE		COMPRESSOR		OFM	IFM	NOMINAL ELECTRIC HEAT	POWER SUPPLY		
		MIN	MAX	RLA	LRA	FLA	FLA	kW	FLA	MCA	MOCP
24	208/230-1-60	197	253	11.1	59.5	0.7	3.5	-/-	-/-	18.1	25
								3.8/5	18.1/20.8	40.7/44.1	45/45
								5.4/7.2	25.9/30	50.5/55.6	60/60
								7.5/10	36.1/41.7	63.2/70.2	70/80
30	208/230-1-60	197	253	13.2	72.2	1.2	3.9	-/-	-/-	21.6	30
								3.8/5	18.1/20.8	44.2/47.6	45/50
								5.4/7.2	25.9/30	54/59.1	60/60
								7.5/10	36.1/41.7	66.7/73.7	70/80
								11.3/15	54.2/62.5	89.4/99.7	90/100
36	208/230-1-60	197	253	16	91.9	1.2	3.8	-/-	-/-	25	40
								3.8/5	18.1/20.8	47.6/51	50/60
								5.4/7.2	25.9/30	57.4/62.5	60/70
								7.5/10	36.1/41.7	70.1/77.1	80/80
								11.3/15	54.2/62.5	92.8/103.1	100/110
	208/230-3-60	197	253	10.9	97.5	1.2	3.8	-/-	-/-	18.6	25
								3.8/5	10.4/12	31.6/33.6	35/35
								5.4/7.2	20.8/24.1	44.6/48.8	45/50
								11.3/15	31.2/36.1	57.6/63.8	60/70
	460-3-60	414	506	5.4	43.4	0.53	1.2	-	-	8.5	15
								10	12	23.5	25
								15	18	31	35
42	208/230-1-60	197	253	18.6	110	1.1	5.8	-/-	-/-	30.2	45
								3.8/5	18.1/20.8	52.8/56.2	60/60
								5.4/7.2	25.9/30	62.5/67.7	70/70
								7.5/10	36.1/41.7	75.3/82.3	80/90
								11.3/15	54.2/62.5	97.9/108.3	100/110
								15/20	72.2/83.3	120.4/134.3	125/150
	208/230-3-60	197	253	12.8	120	1.1	5.8	-/-	-/-	22.9	35
								3.8/5	10.4/12	35.9/37.9	40/40
								5.4/7.2	20.8/24.1	48.9/53	50/60
								11.3/15	31.2/36.1	61.9/68	70/70
								15/20	41.4/47.9	74.7/82.8	80/90
	460-3-60	414	506	6.4	55.1	0.53	1.7	-	-	10.2	15
								10	12	25.2	30
								15	18	32.7	35
								20	24.1	40.4	45
48	208/230-1-60	197	253	19.7	130	1.2	6.9	-/-	-/-	32.7	50
								3.8/5	18.1/20.8	55.4/58.7	60/60
								5.4/7.2	25.9/30	65.1/70.2	70/80
								7.5/10	36.1/41.7	77.9/84.9	80/90
								11.3/15	54.2/62.5	100.5/110.9	110/125
								15/20	72.2/83.3	123/136.9	125/150
	208/230-3-60	197	253	13.7	83.1	1.2	6.9	-/-	-/-	25.2	35
								3.8/5	10.4/12	38.2/40.2	40/45
								5.4/7.2	20.8/24.1	51.2/55.4	60/60
								11.3/15	31.2/36.1	64.2/70.4	70/80
								15/20	41.4/47.9	77/85.1	80/90
	460-3-60	414	506	6.2	41	0.53	2.3	-	-	10.6	15
								10	12	25.6	30
								15	18	33.1	35
								20	24.1	40.7	45
60	208/230-1-60	197	253	27.7	124.5	1.1	6.9	-/-	-/-	42.6	60
								3.8/5	18.1/20.8	65.3/68.6	70/70
								5.4/7.2	25.9/30	75/80.1	80/90
								7.5/10	36.1/41.7	87.8/94.8	90/100
								11.3/15	54.2/62.5	110.4/120.8	125/125
								15/20	72.2/83.3	132.9/146.8	150/150
	208/230-3-60	197	253	13.2	93	1.1	6.9	-/-	-/-	24.5	35
								3.8/5	10.4/12	37.5/39.5	40/40
								5.4/7.2	20.8/24.1	50.5/54.6	60/60
								11.3/15	31.2/36.1	63.5/69.6	70/70
								15/20	41.4/47.9	76.3/84.4	80/90
	460-3-60	414	506	6.3	55	0.53	2.3	-	-	10.7	15
								10	12	25.7	30
								15	18	33.2	35
								20	24.1	40.8	45

See Legend and Notes.

LEGEND

FLA - Full Load Amps
IFM - Indoor Fan Motor
LRA -Locked Rotor Amps
MCA - Minimum Circuit Amps
MOCP - Maximum Over Current Protection
OFM - Outdoor Fan Motor
RLA - Rated Load Amps

NOTES:

1. In compliance with NEC (National Electrical Code) requirements for multimotor and combination load equipment (refer to NEC Articles 430 and 440), the overcurrent protective device for the unit shall be Power Supply fuse or circuit breaker.
2. Minimum wire size is based on 60 C copper wire. If other than 60 C wire is used, or if length exceeds wire length in table, determine size from NEC.
3. Unbalanced 3-Phase Supply Voltage
   Never operate a motor where a phase imbalance in supply voltage is greater than 2%. Use the following formula to determine the percentage of voltage imbalance

   % Voltage imbalance

   $$= 100 \times \frac{\text{max voltage deviation from average voltage}}{\text{average voltage}}$$

EXAMPLE: Supply voltage is 230-3-60.

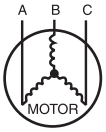

AB = 228 v
BC = 231 v
AC = 227 v

$$\text{Average Voltage} = \frac{228 + 231 + 227}{3} = \frac{686}{3} = 229$$

Determine maximum deviation from average voltage.
(AB) 229 - 228 = 1 v
(BC) 231 - 229 = 2 v
(AC) 229 - 227 = 2 v

Maximum deviation is 2 v.

Determine percent of voltage imbalance

$$\% \text{ Voltage Imbalance} = 100 \times \frac{2}{229} = 0.8\%$$

This amount of phase imbalance is satisfactory as it is below the maximum allowable 2%.

IMPORTANT: If the supply voltage phase imbalance is more than 2%, contact your local electric utility company immediately.

A09604

Typical Connection Wiring Schematic - 208/230-1-60

CONNECTION WIRING DIAGRAM
DANGER: ELECTRICAL SHOCK HAZARD DISCONNECT POWER BEFORE SERVICING

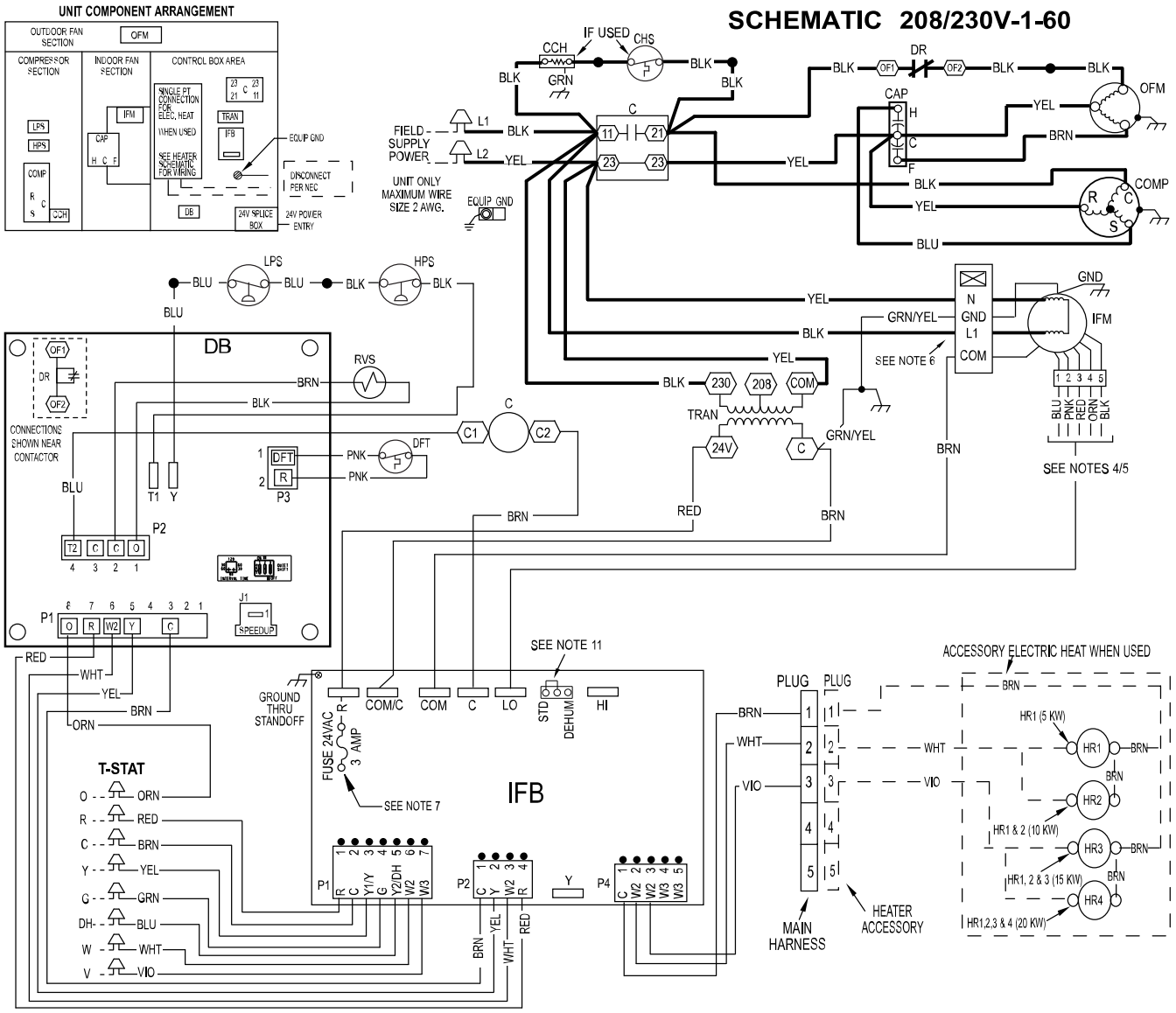

NOTES:

1. IF ANY OF THE ORIGINAL WIRES FURNISHED ARE REPLACED IT MUST BE REPLACED WITH THE SAME OR ITS EQUIVALENT.
2. SEE PRE SALE LITERATURE FOR THERMOSTATS.
3. USE 75 DEGREES C COPPER CONDUCTORS FOR FIELD INSTALLATION.
4. REFER TO INSTALLATION INSTRUCTIONS FOR CORRECT SPEED SELECTION FOR IFM.
5. RELOCATION OF SPEED TAPS MAY BE REQUIRED WHEN USING FIELD INSTALLED ELECTRIC HEATERS. CONSULT INSTALLATION INSTRUCTIONS TO DETERMINE CORRECT SPEED TAP SETTING.
6. "DO NOT DISCONNECT PLUG UNDER LOAD".
7. THIS FUSE IS MANUFACTURED BY LITTLE FUSE, P/N 287003.
8. N.E.C. CLASS 2, 24V.
9. UNIT FACTORY - SHIPPED IN STD MODE.
10. CCH NOT USED ON ALL UNITS.
11. DEHUM FEATURE CANNOT BE USED WHEN ECONOMIZER IS INSTALLED. UNIT FACTORY - SHIPPED IN STD MODE.

LEGEND

- FIELD SPLICE
- TERMINAL (MARKED)
- TERMINAL (UNMARKED)
- SPLICE
- SPLICE (MARKED)
- FACTORY LO VOLTAGE
- FIELD CONTROL WIRING
- FIELD POWER WIRING
- ACCESSORY OR OPTIONAL WIRING
- FACTORY HI VOLTAGE

C	CONTACTOR
CAP	CAPACITOR
CCH	CRANKCASE HEATER
COMP	COMPRESSOR MOTOR
CTD	COMPRESSOR TIME DELAY
DH	DEHUM
DB	DEFROST BOARD
DFT	DEFROST TEMPERATURE SWITCH
DR	DEFROST RELAY (SEE DB)
GND	GROUND
HPS	HIGH PRESSURE SWITCH
HR	HEATER RELAY
IFB	INDOOR FAN BOARD
IFM	INDOOR FAN MOTOR
LPS	LOW PRESSURE SWITCH
OFM	OUTDOOR FAN MOTOR
RVS	REVERSING VALVE
TRAN	TRANSFORMER
T-STAT	THERMOSTAT

A221468

Typical Ladder Wiring Schematic - 208/230-1-60

LADDER WIRING DIAGRAM
DANGER: ELECTRICAL SHOCK HAZARD DISCONNECT POWER BEFORE SERVICING

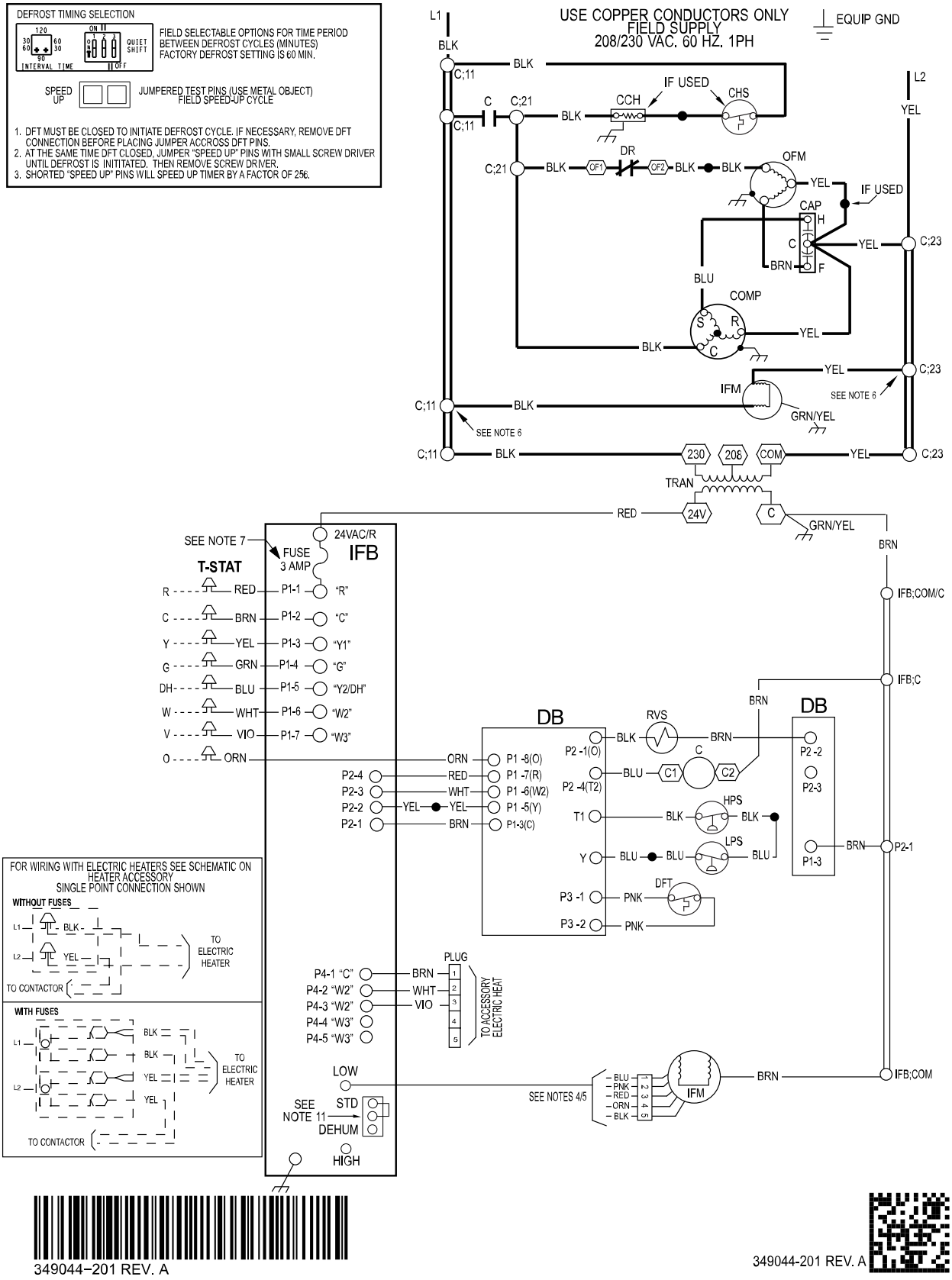

A221469

Typical Connection Wiring Schematic - 208/230-3-60

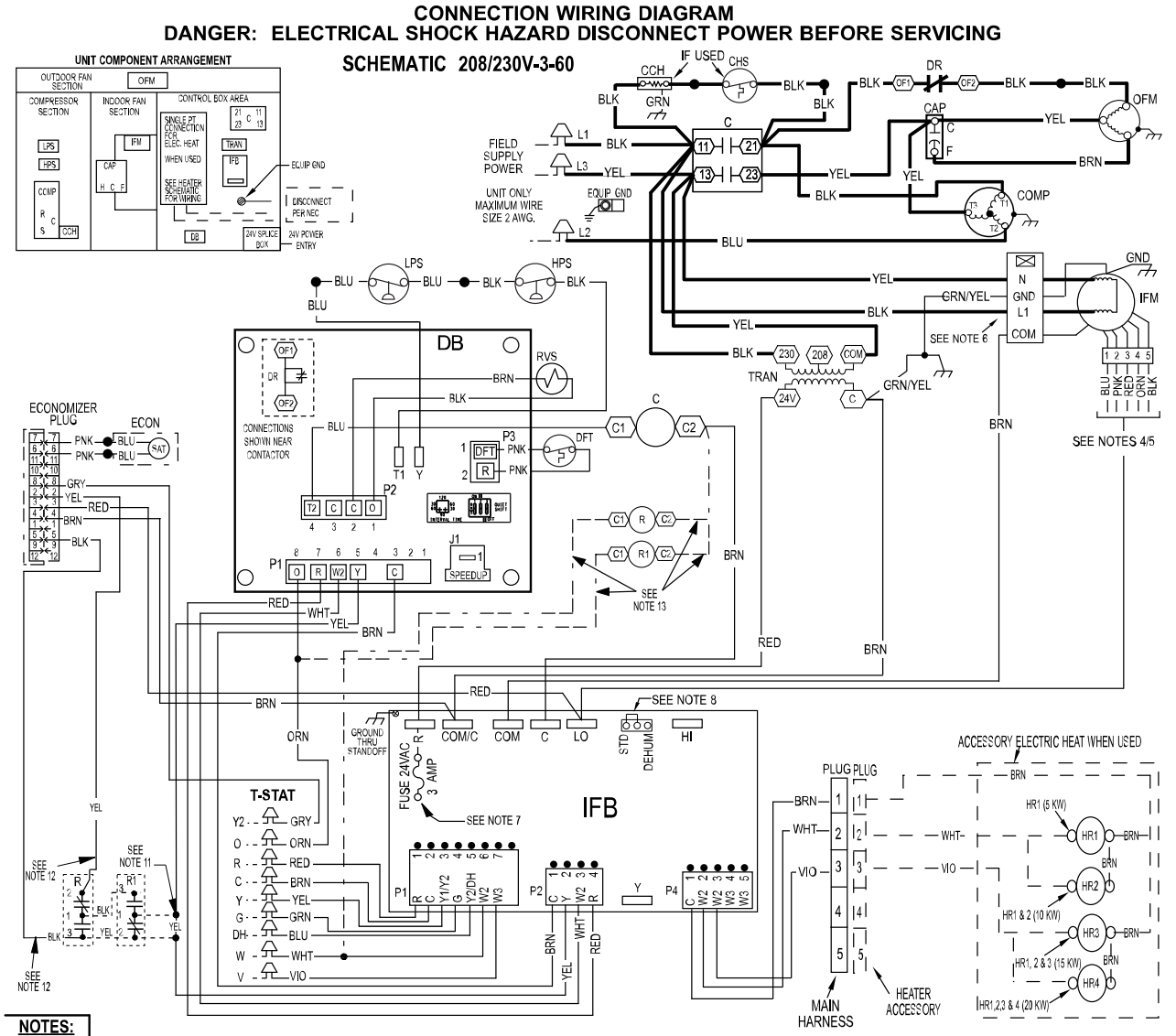

NOTES:

1. IF ANY OF THE ORIGINAL WIRES FURNISHED ARE REPLACED IT MUST BE REPLACED WITH THE SAME OR ITS EQUIVALENT.
2. SEE PRE SALE LITERATURE FOR THERMOSTATS.
3. USE 75 DEGREES C COPPER CONDUCTORS FOR FIELD INSTALLATION.
4. REFER TO INSTALLATION INSTRUCTIONS FOR CORRECT SPEED SELECTION FOR IFM.
5. RELOCATION OF SPEED TAPS MAY BE REQUIRED WHEN USING FIELD INSTALLED ELECTRIC HEATERS. CONSULT INSTALLATION INSTRUCTIONS TO DETERMINE CORRECT SPEED TAP SETTING.
6. "DO NOT DISCONNECT PLUG UNDER LOAD".
7. THIS FUSE IS MANUFACTURED BY LITTLE FUSE, P/N 287003.
8. DEHUM FEATURE CANNOT BE USED WHEN ECONOMIZER IS INSTALLED. UNIT FACTORY - SHIPPED IN STD MODE.
9. N.E.C. CLASS 2, 24V.
10. CCH NOT USED ON ALL UNITS.
11. REMOVE YELLOW SPLICE WHEN ECONOMIZER AND ECONOMIZER RELAYS ARE USED AND CONNECT TO RELAY R1 AS SHOWN.
12. WHEN ECONOMIZER AND ECONOMIZER RELAYS ARE USED CONNECT THE YELLOW AND BLACK WIRES TO RELAY "R" AS SHOWN. RELAY KIT REQUIRED WITH ECONOMIZER AND HEAT PUMP / DUAL FUEL UNITS.
13. WHEN ECONOMIZER AND ECONOMIZER RELAYS ARE USED, INSTALL WIRES AS SHOWN ONTO THE COILS OF RELAY R AND RELAY R1.

LEGEND

- FIELD SPLICE
- TERMINAL (MARKED)
- TERMINAL (UNMARKED)
- SPLICE
- SPLICE (MARKED)
- FACTORY LO VOLTAGE
- FIELD CONTROL WIRING
- FIELD POWER WIRING
- ACCESSORY OR OPTIONAL WIRING
- FACTORY HI VOLTAGE

C	CONTACTOR
CAP	CAPACITOR
CCH	CRANK CASE HEATER
COMP	COMPRESSOR MOTOR
DB	DEFROST BOARD
DH	DEHUMIDIFICATION MODE
DFT	DEFROST TERMPERATURE SWITCH
DEHUM	DEHUMIDIFICATION MODE
DR	DEFROST RELAY (SEE DB)
ECON	ECONOMIZER
EQUIP	EQUIPMENT
GND	GROUND
HPS	HIGH PRESSURE SWITCH
HR	HEATER RELAY
IFB	INDOOR FAN BOARD
IFM	INDOOR FAN MOTOR
LPS	LOW PRESSURE SWITCH
OFM	OUTDOOR FAN MOTOR
RVS	REVERSING VALVE
STD	STANDARD MODE
TRAN	TRANSFORMER
T-STAT	THERMOSTAT

349043-201 REV. A

A221470

Typical Ladder Wiring Schematic - 208/230-3-60

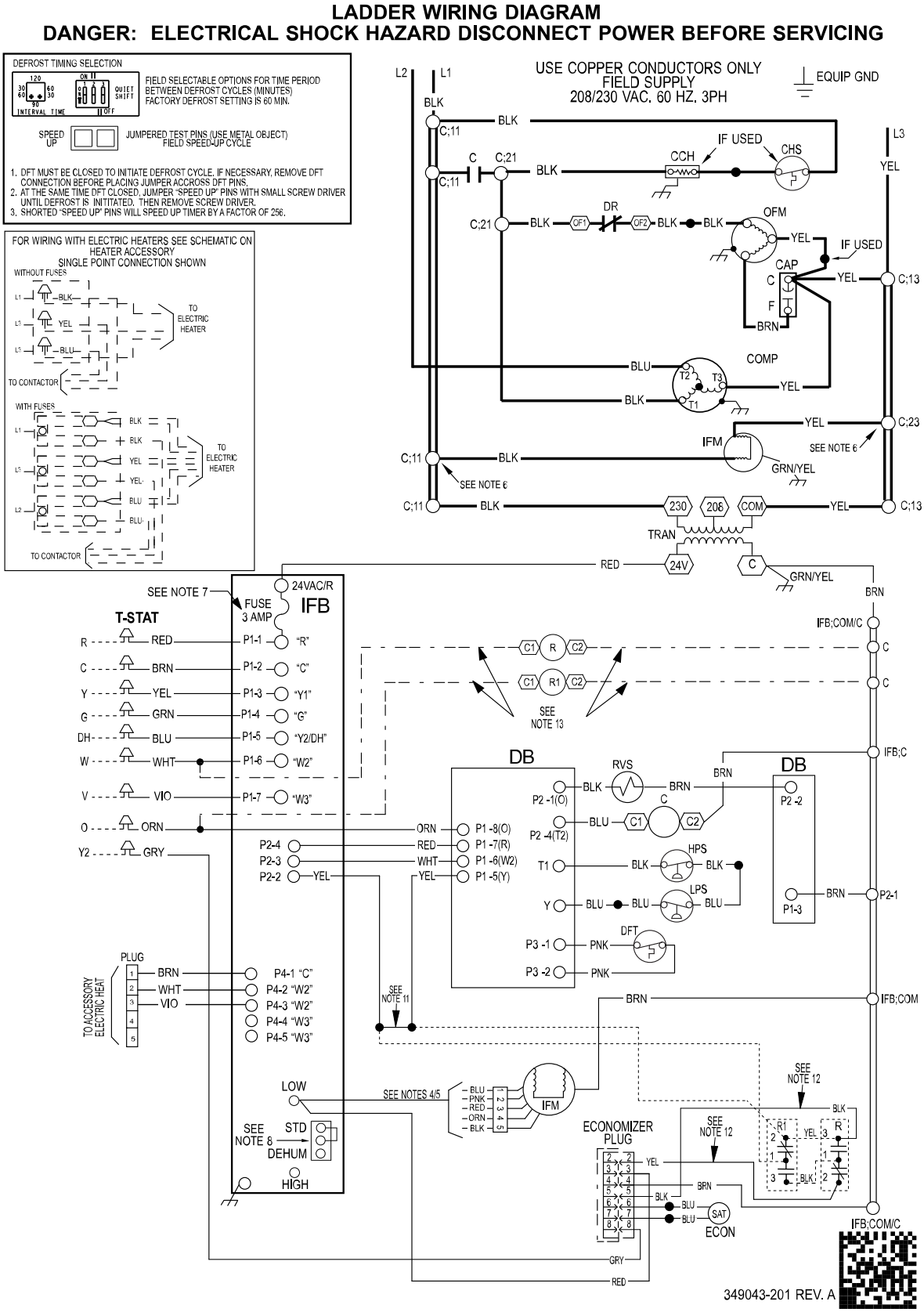

A221471

Typical Connection Wiring Schematic - 460-3-60

CONNECTION WIRING DIAGRAM
DANGER: ELECTRICAL SHOCK HAZARD DISCONNECT POWER BEFORE SERVICING

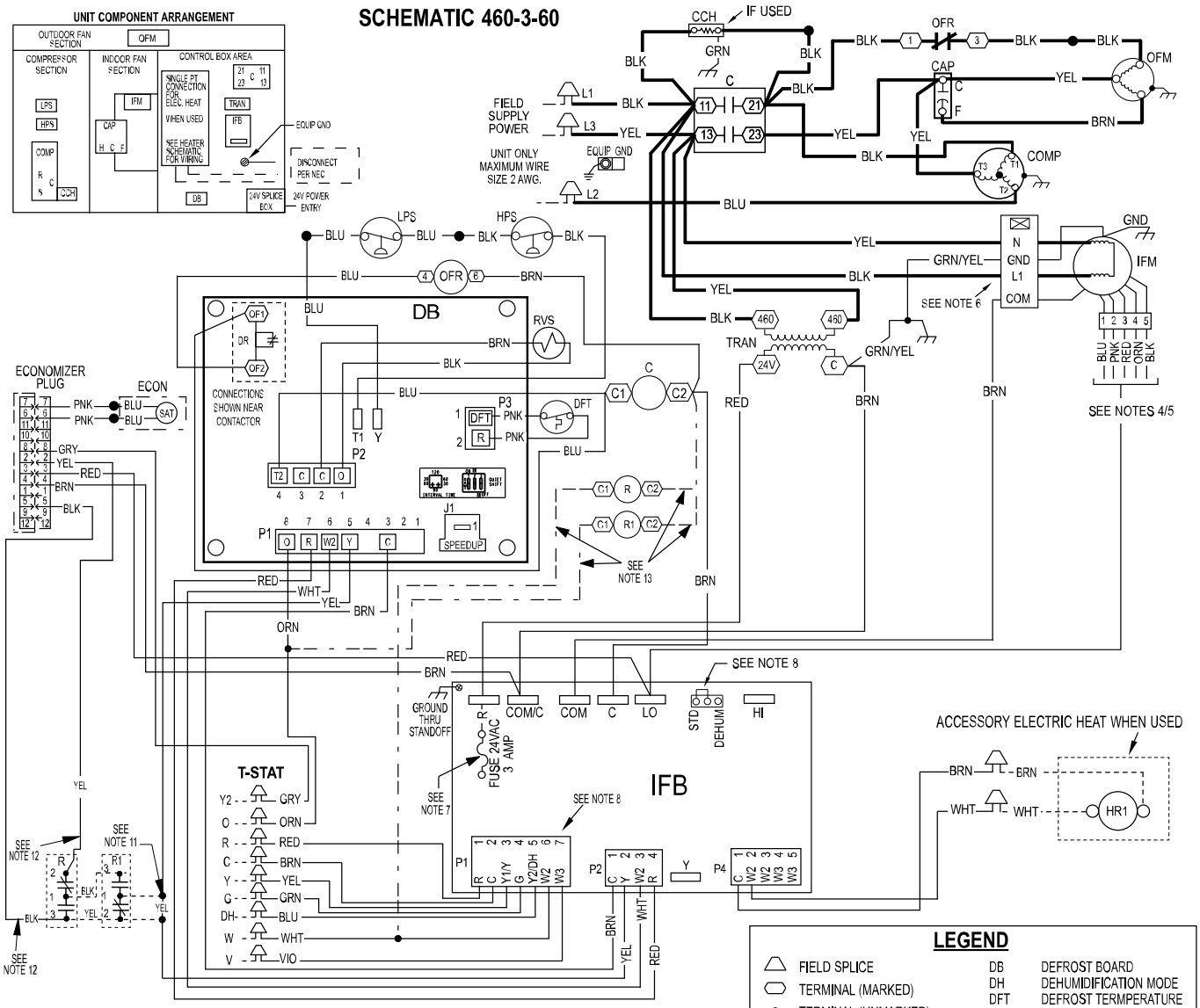

LEGEND

FIELD SPLICE	
TERMINAL (MARKED)	
TERMINAL (UNMARKED)	
SPLICE	
SPLICE (MARKED)	
FACTORY LO VOLTAGE	
FIELD CONTROL WIRING	
FIELD POWER WIRING	
ACCESSORY OR OPTIONAL WIRING	
FACTORY HI VOLTAGE	
C	CONTACTOR
CAP	CAPACITOR
CCH	CRANK CASE HEATER
COMP	COMPRESSOR MOTOR
DB	DEFROST BOARD
DH	DEHUMIDIFICATION MODE
DFT	DEFROST TERMPERATURE SWITCH
DEHUM	DEHUMIDIFICATION MODE
DR	DEFROST RELAY
ECON	ECONOMIZER
EQUIP	EQUIPMENT
GND	GROUND
HPS	HIGH PRESSURE SWITCH
HR	HEATER RELAY
IFB	INDOOR FAN BOARD
IFM	INDOOR FAN MOTOR
LPS	LOW PRESSURE SWITCH
OFM	OUTDOOR FAN MOTOR
OFR	OUTDOOR FAN RELAY
RVS	REVERSING VALVE
STD	STANDARD MODE
TRAN	TRANSFORMER
T-STAT	THERMOSTAT

NOTES:

1. IF ANY OF THE ORIGINAL WIRES FURNISHED ARE REPLACED IT MUST BE REPLACED WITH THE SAME OR ITS EQUIVALENT.
2. SEE PRE SALE LITERATURE FOR THERMOSTATS.
3. USE 75 DEGREES C COPPER CONDUCTORS FOR FIELD INSTALLATION.
4. REFER TO INSTALLATION INSTRUCTIONS FOR CORRECT SPEED SELECTION FOR IFM.
5. RELOCATION OF SPEED TAPS MAY BE REQUIRED WHEN USING FIELD INSTALLED ELECTRIC HEATERS. CONSULT INSTALLATION INSTRUCTIONS TO DETERMINE CORRECT SPEED TAP SETTING.
6. "DO NOT DISCONNECT PLUG UNDER LOAD".
7. THIS FUSE IS MANUFACTURED BY LITTLE FUSE, P/N 297003.
8. DEHUM FEATURE CANNOT BE USED WHEN ECONOMIZER IS INSTALLED. UNIT FACTORY - SHIPPED IN STD MODE.
9. N.E.C. CLASS 2, 24V.
10. CCH NOT USED ON ALL UNITS.
11. REMOVE YELLOW SPLICE WHEN ECONOMIZER AND ECONOMIZER RELAYS ARE USED AND CONNECT TO RELAY R1 AS SHOWN.
12. WHEN ECONOMIZER AND ECONOMIZER RELAYS ARE USED CONNECT THE YELLOW AND BLACK WIRES TO RELAY "R" AS SHOWN. RELAY KIT REQUIRED WITH ECONOMIZER AND HEAT PUMP / DUAL FUEL UNITS.
13. WHEN ECONOMIZER AND ECONOMIZER RELAYS ARE USED, INSTALL WIRES AS SHOWN ONTO THE COILS OF RELAY R AND RELAY R1.

A221472

Typical Ladder Wiring Schematic - 460-3-60

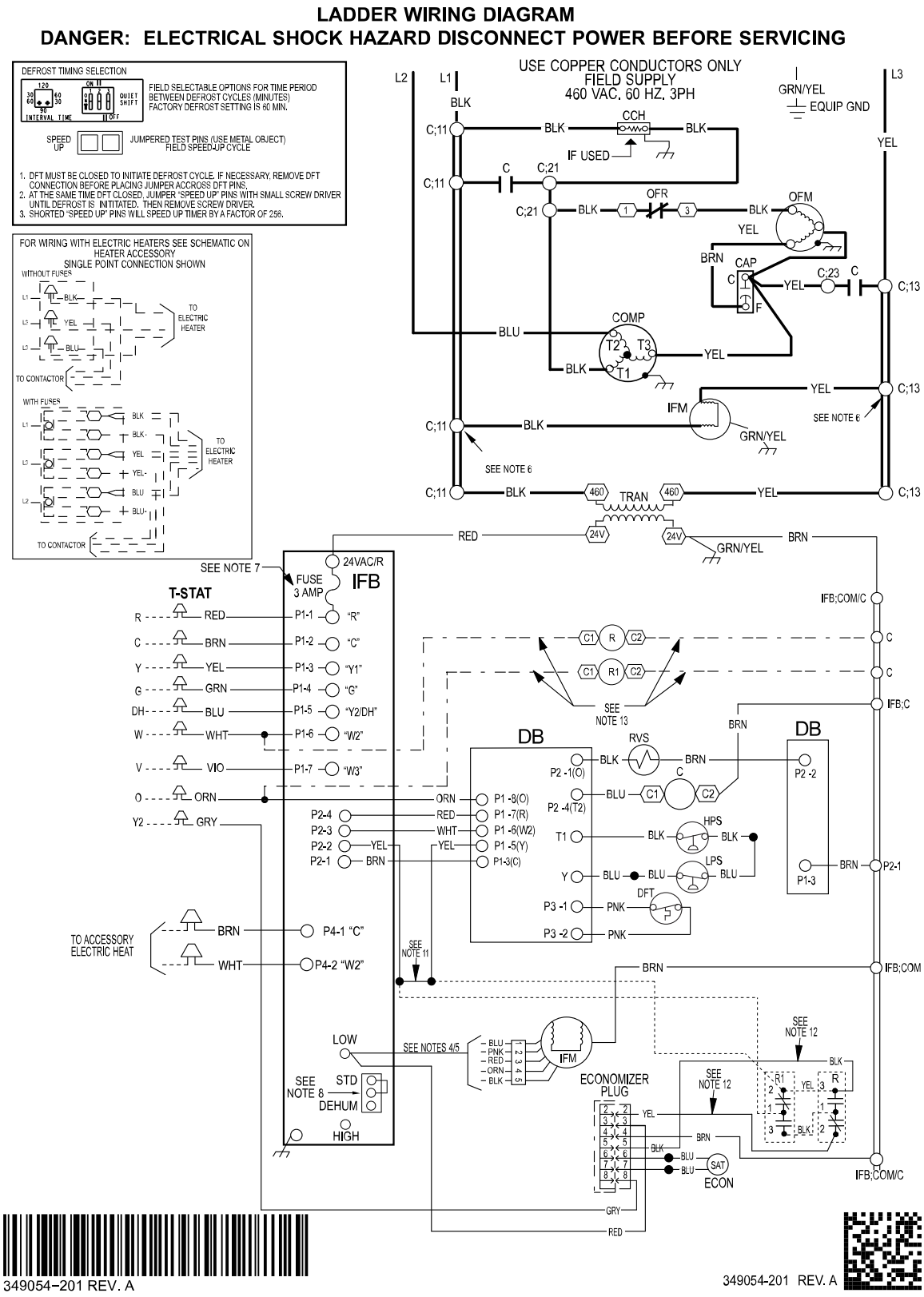

A221473

Controls

Operating Sequence

When power is supplied to unit, the transformer (TRAN) is energized.

On units with crankcase heater, heater is also energized.

Cooling — With the thermostat in the cooling position, the thermostat makes circuit R-O. This energizes the reversing valve solenoid (RVS) and places the unit in standby condition for cooling.

As the space temperature rises, the thermostat closes circuit R-Y. A circuit is made to contactor (C), starting the compressor (COMP) and outdoor-fan motor (OFM). Circuit R-G is made at the same time and starts the indoor-fan motor (IFM).

When the thermostat is satisfied, contacts open, deenergizing C. The COMP and OFM stop, and the IFM stops after the preselected time delay.

Heating — On a call for heat, thermostat makes circuits R-Y and R-G.

A circuit is made to C, starting COMP and OFM. Circuit R-G also is completed, energizing IFR and starting IFM after the selected time delay.

Should room temperature continue to fall, circuit R-W is made through second-stage thermostat. If optional electric heat package is used, a relay is energized, bringing on first bank of supplemental electric heat. When thermostat is satisfied, contacts open, deenergizing contactor and relay; motors and heaters deenergize.

Demand Defrost Mode— The defrost mode is factory set to an initial 60-minute time interval. It may also be adjusted to an initial interval of 30, 90, or 120 minutes. During operation, the control optimizes current defrost time based on the previous defrost interval and previous defrost period. If the previous defrost period is less than 2 minutes for two consecutive defrost cycles the control will lengthen the defrost interval by 15 minutes, up to a maximum of 120 minutes or 30 minutes greater than the original setpoint, whichever comes first. If the previous defrost period is more than 5 minutes for two consecutive defrost cycles the control will shorten the defrost interval by 15 minutes, down to a minimum of 30 minutes or 30 minutes from the original setpoint, whichever is first. After the defrost condition is satisfied, or after a maximum of 10 minutes in defrost mode, the unit will resume normal heating operation.

Manufacturer reserves the right to change, at any time, specifications and designs without notice and without obligations.

Guide Specifications

Packaged Heat Pump System

HVAC Guide Specifications

Size Range: 2 to 5 Tons, Nominal Cooling

Part 1 – General

SYSTEM DESCRIPTION

Outdoor, packaged, air-to-air heat pump unit utilizing a hermetic scroll compressor for cooling duty and optional electric heating. Unit shall discharge supply air vertically or horizontally as shown on contract drawings. Outdoor fan/coil section shall have a draw-thru design with vertical discharge for minimum sound levels.

QUALITY ASSURANCE

- Unit shall be rated in accordance with AHRI Standards 210/240 and 270.
- Unit shall be designed in accordance with UL Standard 1995.
- Unit shall be manufactured in a facility registered to ISO 9001 manufacturing quality standard.
- Unit shall be UL listed and c-UL certified as a total package for safety requirements.
- Roof curb shall be designed to conform to NRCA Standards.
- Insulation and adhesives shall meet NFPA 90A requirements for flame spread and smoke generation.
- Cabinet insulation shall meet ASHRAE Standard 62P.

DELIVERY, STORAGE AND HANDLING

Unit shall be stored and handled per manufacturer's recommendations.

Part 2 – Products

EQUIPMENT

General:

Factory-assembled, single-piece, heat pump unit. Contained within the enclosure shall be all factory wiring, piping, controls, refrigerant charge (R-410A), and special features required prior to field start-up.

Unit Cabinet:

- Unit cabinet shall be constructed of phosphated, zinc-coated, pre-painted steel capable of withstanding 500 hours of salt spray.
- Normal service shall be through 3 removable cabinet panels.
- The unit shall be constructed on a rust proof unit base that has an externally trapped, integrated sloped drain.
- Indoor fan compartment top surface shall be insulated with a minimum 1/2-in. (13 mm) thick, flexible fiberglass insulation, coated on the air side and retained by adhesive and mechanical means. The indoor wall sections will be insulated with a minimum semi-rigid, foil-faced board capable of being wiped clean. Aluminum foil-faced fiberglass insulation shall be used in the entire indoor air cavity section.
- Unit shall have a field-supplied condensate trap.
- Metal Insulated Duct Covers for side discharge will be standard on all sizes.
- Unit insulation conforms to ASHRAE 62P.

Fans:

- The indoor fan shall be 5-speed, direct-drive, as shown on equipment drawings.
- Fan wheel shall be made from steel and shall be double-inlet type with forward-curved blades with corrosion resistant finish. Fan wheel shall be dynamically balanced.
- Outdoor fan shall be direct-drive, propeller-type with aluminum blades riveted to corrosion resistant steel spiders, be dynamically balanced, and discharge air vertically.

Compressor:

- Fully hermetic compressors with factory-installed vibration isolation.
- Scroll compressors shall be standard on all units.

Coils:

- Indoor coils shall have aluminum plate fins mechanically bonded to seamless aluminum tubes with all joints brazed. Tube sheet openings shall be belled to prevent tube wear. Outdoor coil shall have aluminum fins with copper tubing.

Refrigerant Metering Device:

- Refrigerant metering device shall be thermostatic expansion valve or fixed orifice for cooling, and fixed orifice for heating.

Filters:

- Filter section shall consist of field-installed, throwaway, 1-in. (25 mm) - thick fiberglass filters of commercially available sizes.

Controls and Safeties:

- Unit controls shall be complete with a self-contained, low- voltage control circuit.
- Units shall incorporate an internal compressor protector that provides reset capability.

Operating Characteristics:

- Unit shall be capable of starting and running at 125°F (51.7°C) ambient outdoor temperature.
- Compressor with standard controls shall be capable of operation down to 40°F (4.4°C) ambient outdoor temperature in cooling mode.
- Unit shall be provided with 90-second fan time delay after the thermostat is satisfied.

Electrical Requirements:

- All unit power wiring shall enter the unit cabinet at a single location.

Motors:

- Compressor motors shall be of the refrigerant-cooled type with line-break thermal and current overload protection.
- All fan motors shall have permanently lubricated bearings, and inherent, automatic reset, thermal overload protection.
- Condenser fan motor shall be totally enclosed.
- Evaporator fan motor to be ECM Motor.

Special Features Available:

- Compressor Start Kit (single phase units only):
  Shall provide additional starting torque for single-phase compressors.
- Thermostat:
  To provide for two-stage heating and one-stage cooling in addition manual or automatic changeover and indoor fan control.
- Crankcase Heater:
  Shall provide anti-floodback protection for lowload cooling applications.
- Economizer:
  (Horizontal - Field installed accessory)
  (Vertical - Field installed accessory)
  a. Economizer controls capable of providing free cooling using outside air.
  b. Equipped with low leakage dampers not to exceed 3% leakage, at 1.0 IN. W.C. pressure differential.
  c. Spring return motor shuts off outdoor damper on power failure.

Guide Specifications (Continued)

- Electric Heaters
  a. Electric heater shall be available as a field installed option.
  b. Heater elements shall be open wire type, adequately supported and insulated with ceramic bushings.
  c. Electric heater packages must provide single point power connection capability.
- Filter Rack Kit:
  Shall provide filter mounting for downflow applications. Offered as a field installed accessory.
- Flat Roof Curb:
  Curbs shall have seal strip and a wood nailer for flashing and shall be installed per manufacturer's instructions.
- Low Ambient Package:
  Shall consist of a solid-state control and outdoor coil temperature sensor for controlling outdoor-fan motor operation, which shall allow unit to operate down to 0°F (-17.7°C) outdoor ambient temperature.
- Manual Outdoor Air Damper:
  Package shall consist of damper, birdscreen, and rainhood which can be preset to admit outdoor air for year-round ventilation.
- Square-To-Round Duct Transitions (24-48 size):
  Shall have the ability to convert the supply and return openings from rectangular to round.
- Time Guard II
  Automatically prevents the compressor from restarting for at least 4 minutes and 45 seconds after shutdown of the compressor. Not required when a corporate programmable thermostat is applied or with a RTU-MP control. Offered as a field installed accessory.
- Dual Point Electric Heaters|
  Allows you to power the electric heater and unit contactor separately by having two individual field power supply circuits connected respectively.
- Cabinet air leakage of 2.0% or less at .5 in. W.C. when tested in accordance with ASHRAE standard 193. Available as a factory installed option.
- Louver Metal Outdoor Coil Grille
  Shall provide hail and vandalism protection. Available as a field installed accessory.

© 2024 Carrier. All rights reserved.

Manufacturer reserves the right to change, at any time, specifications and designs without notice and without obligations.