24ACC6
Performance™ 16 Air Conditioner
with Puron® Refrigerant
1–1/2 to 5 Tons

Carrier
turn to the experts

Product Data

Puron
the environmentally sound refrigerant

Performance SERIES

Carrier's Air Conditioners with Puron® refrigerant provide a collection of features unmatched by any other family of equipment. The 24ACC has been designed utilizing Carrier's Puron refrigerant. The environmentally sound refrigerant allows you to make a responsible decision in the protection of the earth's ozone layer.

This product has been designed and manufactured to meet Energy Star® criteria for energy efficiency when matched with appropriate coil components. Refer to the combination ratings in the Product Data for system combinations that meet Energy Star® guidelines.

NOTE: Ratings contained in this document are subject to change at any time. Always refer to the AHRI directory (www.ahridirectory.org) for the most up-to-date ratings information.

INDUSTRY LEADING FEATURES / BENEFITS

Efficiency

- 14 - 16.5 SEER / 11.5- 13.5 EER
- Microtube Technology™ refrigeration system
- Indoor air quality accessories available

Sound

- Sound level as low as 72 dBA
- Compressor sound blanket standard

Comfort

- System supports Edge® Thermidistat™ or standard thermostat controls

Reliability

- Puron® refrigerant - environmentally sound, won't deplete the ozone layer and low lifetime servce cost.
- Scroll compressor
- Internal pressure relief valve
- Internal thermal overload
- Filter drier
- High and low pressure switches
- Balanced refrigeration system for maximum reliability

Durability

WeatherArmor™ protection package:

- Solid, durable sheet metal construction
- Louvered coil guard
- Baked-on, complete outer coverage, powder paint

Applications

- Long-line - up to 250 feet (76.20 m) total equivalent length, up to 200 feet (60.96 m) condenser above evaporator, or up to 80 ft. (24.38 m) evaporator above condenser (See Longline Guide for more information.)
- Low ambient (down to -20°F/-28.9°C)) with accessory kit

MODEL NUMBER NOMENCLATURE

1	2	3	4	5	6	7	8	9	10	11	12	13
N	N	A	A	A/N	N	N	N	A/N	A/N	A/N	N	N
2	**4**	**A**	**C**	**C**	**6**	**3**	**6**	**A**	**0**	**0**	**3**	0
Product Series		Product Family	Tier	Major Series	SEER	Cooling Capacity		Grille Variations	Open	Open	Voltage	Series
24=AC		A=RES AC	C=Performance	C=Puron	6=16 SEER			A = Standard	0=Not Defined	0=Not Defined	3=208/230–1	0 = Original Series

Puron™ the environmentally sound refrigerant

AHRI CERTIFIED™ www.ahridirectory.org

Use of the AHRI Certified TM Mark indicates a manufacturer's participation in the program For verification of certification for individual products, go to www.ahridirectory.org.

Certified System™

ISO 9001
QMI-SAI Global

c UL US

ENERGY STAR

This product has been designed and manufactured to meet Energy Star® criteria for energy efficiency when matched with appropriate coil components. However, proper refrigerant charge and proper air flow are critical to achieve rated capacity and efficiency. Installation of this product should follow all manufacturing refrigerant charging and air flow instructions. **Failure to confirm proper charge and air flow may reduce energy efficiency and shorten equipment life.**

STANDARD FEATURES

Feature	18	24	30	36	42	48	60
Puron Refrigerant	X	X	X	X	X	X	X
Maximum SEER *	16.0	16.0	16.5	16.5	16.0	16.0	16.0
Scroll Compressor	X	X	X	X	X	X	X
Field Installed Filter Drier	X	X	X	X	X	X	X
Front Seating Service Valves	X	X	X	X	X	X	X
Internal Pressure Relief Valve	X	X	X	X	X	X	X
Internal Thermal Overload	X	X	X	X	X	X	X
Long Line capability	X	X	X	X	X	X	X
Low Ambient capability with Kit	X	X	X	X	X	X	X
High Pressure Switch	X	X	X	X	X	X	X
Low Pressure Switch	X	X	X	X	X	X	X
Compressor Sound Blanket	X	X	X	X	X	X	X
Louvered Coil Guard	X	X	X	X	X	X	X

* With approved combinations
X = Standard

PHYSICAL DATA

UNIT SIZE – VOLTAGE, SERIES	18–30	24–30	30–30	36–30	42–30	48–30	60–30
Operating Weight lb (kg)	136 (61.7)	163 (73.9)	167 (75.7)	180 (81.6)	234 (106.1)	248 (112.5)	337 (152.9)
Shipping Weight lb (kg)	163 (73.9)	198 (89.8)	204 (92.5)	219 (99.3)	281 (127.5)	291 (132.0)	372 (188.7)
Compressor Type	Scroll						
REFRIGERANT	Puron (R–410A)						
Control	TXV (Puron Hard Shutoff)						
Charge lb (kg)	4.60 (2.09)	6.00 (2.72)	6.81 (3.09)	7.00 (3.18)	8.62 (3.91)	10.50 (4.76)	14.50 (6.58)
COND FAN	Propeller Type, Direct Drive						
Air Discharge	Vertical						
Air Qty (CFM)	1881	2614	2614	3223	3810	4046	4046
Motor HP	1/12	1/10	1/10	1/12	1/5	1/4	1/4
Motor RPM	1100	800	800	800	800	800	800
COND COIL							
Face Area (Sq ft)	11.50	15.10	17.20	17.60	25.15	20.10	30.15
Fins per In.	25	25	25	25	25	20	20
Rows	1	1	1	1	1	2	2
Circuits	3	4	4	4	6	7	8
VALVE CONNECT. (In. ID)							
Vapor	3/4	3/4	3/4	7/8	7/8	7/8	7/8
Liquid	3/8	3/8	3/8	3/8	3/8	3/8	3/8
REFRIGERANT TUBES (In. OD)							
Rated Vapor*	3/4			7/8			1 1/8
Max Liquid Line	3/8						

* Units are rated with 25 ft (7.6 m) of lineset length. See Vapor Line Sizing and Cooling Capacity Loss table when using other sizes and lengths of lineset.
Note: See unit Installation Instruction for proper installation.

† See *Liquid Line Sizing For Cooling Only Systems with Puron Refrigerant* tables.

REFRIGERANT PIPING LENGTH LIMITATIONS

Liquid Line Sizing and Maximum Total Equivalent Lengths† for Cooling Only Systems with Puron® Refrigerant:

The maximum allowable length of a residential split system depends on the liquid line diameter and vertical separation between indoor and outdoor units.

See Table below for liquid line sizing and maximum lengths :

Maximum Total Equivalent Length
Outdoor Unit BELOW Indoor Unit

Size	Liquid Line Connection	Liquid Line Diam. w/ TXV	AC with Puron Refrigerant Maximum Total Equivalent Length†: Outdoor unit BELOW Indoor Vertical Separation ft (m)								
			0–5 (0–1.5)	6–10 (1.8–3.0)	11–20 (3.4–6.1)	21–30 (6.4–9.1)	31–40 (9.4–12.2)	41–50 (12.5–15.2)	51–60 (15.5–18.3)	61–70 (18.6–21.3)	71–80 (21.6–24.4)
18000 AC with Puron	3/8	1/4	150	150	125	100	100	75	– –	– –	– –
		5/16	250*	250*	250*	250*	250*	250*	250*	225*	150
		3/8	250*	250*	250*	250*	250*	250*	250*	250*	250*
24000 AC with Puron	3/8	1/4	75	75	75	50	50	– –	– –	– –	– –
		5/16	250*	250*	250*	250*	250*	225*	175	125	100
		3/8	250*	250*	250*	250*	250*	250*	250*	250*	250*
30000 AC with Puron	3/8	1/4	30	– –	– –	– –	– –	– –	– –	– –	– –
		5/16	175	225*	200	175	125	100	75	– –	– –
		3/8	250*	250*	250*	250*	250*	250*	250*	250*	250*
36000 AC with Puron	3/8	5/16	175	150	150	100	100	100	75	– –	– –
		3//8	250*	250*	250*	250*	250*	250*	250*	250*	250*
42000 AC with Puron	3/8	5/16	125	100	100	75	75	50	– –	– –	– –
		3/8	250*	250*	250*	250*	250*	250*	250*	250*	150
48000 AC with Puron	3/8	3/8	250*	250*	250*	250*	250*	250*	230	160	– –
60000 AC with Puron	3/8	3/8	250*	250*	250*	225*	190	150	110	– –	– –

*** Maximum actual length not to exceed 200 ft (61 m)**

† Total equivalent length accounts for losses due to elbows or fitting. See the Long Line Guideline for details.

– – = outside acceptable range

Maximum Total Equivalent Length
Outdoor Unit ABOVE Indoor Unit

Size	Liquid Line Connection	Liquid Line Diam. w/ TXV	AC with Puron Refrigerant Maximum Total Equivalent Length†: Outdoor unit ABOVE Indoor Vertical Separation ft (m)							
			25 (7.6)	26–50 (7.9–15.2)	51–75 (15.5–22.9)	76–100 (23.2–30.5)	101–125 (30.8–38.1)	126–150 (38.4–45.7)	151–175 (46.0–53.3)	176–200 (53.6–61.0)
18000 AC with Puron	3/8	1/4	175	250*	250*	250*	250*	250*	250*	250*
		5/16	250*	250*	250*	250*	250*	250*	250*	250*
		3/8	250*	250*	250*	250*	250*	250*	250*	250*
24000 AC with Puron	3/8	1/4	100	125	175	200	225*	250*	250*	250*
		5/16	250*	250*	250*	250*	250*	250*	250*	250*
		3/8	250*	250*	250*	250*	250*	250*	250*	250*
30000 AC with Puron	3/8	1/4	30	– –	– –	– –	– –	– –	– –	– –
		5/16	250*	250*	250*	250*	250*	250*	250*	250*
		3/8	250*	250*	250*	250*	250*	250*	250*	250*
36000 AC with Puron	3/8	5/16	225*	250*	250*	250*	250*	250*	250*	250*
		3/8	250*	250*	250*	250*	250*	250*	250*	250*
42000 AC with Puron	3/8	5/16	175	200	250*	250*	250*	250*	250*	250*
		3/8	250*	250*	250*	250*	250*	250*	250*	250*
48000 AC with Puron	3/8	3/8	250*	250*	250*	250*	250*	250*	250*	250*
60000 AC with Puron	3/8	3/8	250*	250*	250*	250*	250*	250*	250*	250*

*** Maximum actual length not to exceed 200 ft (61 m)**

† Total equivalent length accounts for losses due to elbows or fitting. See the Long Line Guideline for details.

– – = outside acceptable range

REFRIGERANT CHARGE ADJUSTMENTS

Liquid Line Size	Puron Charge oz/ft
3/8	0.60 (Factory charge for lineset = 9 oz)
5/16	0.40
1/4	0.27

Units are factory charged for 15 ft (4.6 m) of 3/8" liquid line. The factory charge for 3/8" lineset 9 oz. When using other length or diameter liquid lines, charge adjustments are required per the chart above.

Charging Formula:

[(Lineset oz/ft x total length) – (factory charge for lineset)] = charge adjustment

Example 1: System has 15 ft of line set using existing 1/4" liquid line. What charge adjustment is required?

Formula: (.27 oz/ft x 15ft) – (9 oz) = (-4.95) oz.

Net result is to remove 4.95 oz of refrigerant from the system

Example 2: System has 45 ft of existing 5/16" liquid line. What is the charge adjustment?

Formula: (.40 oz/ft. x 45ft) – (9 oz.) = 9 oz.

Net result is to add 9 oz of refrigerant to the system

LONG LINE APPLICATIONS

An application is considered Long Line, when the refrigerant level in the system requires the use of accessories to maintain acceptable refrigerant management for systems reliability. See Accessory Usage Guideline table for required accessories. Defining a system as long line depends on the liquid line diameter, actual length of the tubing, and vertical separation between the indoor and outdoor units.

For Air Conditioner systems, the chart below shows when an application is considered Long Line.

AC WITH PURON® REFRIGERANT LONG LINE DESCRIPTION ft (m)
Beyond these lengths, long line accessories are required

Liquid Line Size	Units On Same Level	Outdoor Below Indoor	Outdoor Above Indoor
1/4	No accessories needed within allowed lengths	No accessories needed within allowed lengths	175 (53.3)
5/16	120 (36.6)	50 (15.2)	120 (36.6)
3/8	80 (24.4)	35 (10.7)	80 (24.4)

Note: See Long Line Guideline for details

VAPOR LINE SIZING AND COOLING CAPACITY LOSS

Acceptable vapor line diameters provide adequate oil return to the compressor while avoiding excessive capacity loss. The suction line diameters shown in the chart below are acceptable for AC systems with Puron refrigerant:

Unit Nominal Size (Btuh)	Maximum Liquid Line Diameters (In. OD)	Vapor Line Diameters (In. OD)	Cooling Capacity Loss (%) Total Equivalent Line Length ft. (m)								
			26–50 (7.9–15.2)	51–80 (15.5–24.4)	81–100 (24.7–30.5)	101–125 (30.8–38.1)	126–150 (38.4–45.7)	151–175 (46.0–53.3)	176–200 (53.6–61.0)	201–225 (61.3–68.6)	226–250 (68.9–76.2)
18000 1 Stage AC with Puron	3/8	1/2	1	2	3	5	6	7	8	9	11
		5/8	0	1	1	1	2	2	2	3	3
		3/4	0	0	0	0	1	1	1	1	1
24000 1 Stage AC with Puron	3/8	5/8	0	1	2	2	3	3	4	5	5
		3/4	0	0	1	1	1	1	1	2	2
		7/8	0	0	0	0	0	1	1	1	1
30000 1 Stage AC with Puron	3/8	5/8	1	2	3	3	4	5	6	7	8
		3/4	0	0	1	1	1	2	2	2	3
		7/8	0	0	0	0	1	1	1	1	1
36000 1 Stage AC with Puron	3/8	5/8	1	2	4	5	6	8	9	10	12
		3/4	0	1	1	2	2	3	3	4	4
		7/8	0	0	0	1	1	1	1	2	2
42000 1 Stage AC with Puron	3/8	3/4	0	1	2	2	3	4	4	5	6
		7/8	0	0	1	1	1	2	2	2	3
		1 1/8	0	0	0	0	0	0	0	0	0
48000 1 Stage AC with Puron	3/8	3/4	0	1	2	3	4	5	5	6	7
		7/8	0	0	1	1	2	2	2	3	3
		1 1/8	0	0	0	0	0	0	0	1	1
60000 1 Stage AC with Puron	3/8	3/4	1	2	4	5	6	7	9	10	11
		7/8	0	1	2	2	3	4	4	5	5
		1 1/8	0	0	0	1	1	1	1	1	1

Applications in this area may be long line and may have height restrictions. See the *Residential Piping and Long Line Guideline*.

ACCESSORY THERMOSTATS

PART NUMBER	PROGRAM	GAS	ELECTRIC	HEAT PUMP	HYBRID HEAT	HEAT	COOL
Performance							
TP−PRH01−A	7−Day	√	√	√	√	3	2
TP−PAC01	7−Day	√	√			1	1
TP−NRH01−A	NP	√	√	√	√	3	2
TP−NAC01	NP	√	√			1	1

THERMOSTAT ACCESSORIES		
PART NUMBER	**BRIEF DESCRIPTION**	**THERMOSTATS USED WITH**
SYSTXCCRRS01	Indoor Remote Room Temperature Sensor	All TP− thermostats
TP−EXP01−A	ExP Computer Programming Accessory	TP−P thermostats
TSTATXXCNV10‡	Thermostat Conversion Kit (4 to 5 wire) − 10 pack	All Carrier branded thermostats
TX−LBP01	Large Decorative Backplate	TP−Pxx, TP−Nxx, TC−Pxx
TSTATXXSEN01−B*	Outdoor Air Temperature Sensor	All TP− thermostats

ACCESSORIES

KIT NUMBER	DESCRIPTION	18−30	24−30	30−30	36−30	42−30	48−30	60−30
KAAFT0101AAA	FREEZE THERMOSTAT	X	X	X	X	X	X	X
KAATD0101TDR	TIME DELAY RELAY	X	X	X	X	X	X	X
KSALA0301410	LOW AMBIENT PSW	X	X	X	X	X	X	X
KSALA0601AAA	MOTORMASTER 230V	X	X	X	X	X	X	X
HC32GE234	MOTOR FAN BALL BEARING	X						
HC34GE240	MOTOR FAN BALL BEARING		X	X				
HC32GE229	MOTOR FAN BALL BEARING				X			
HC38GE228	MOTOR FAN BALL BEARING					X		
HC40GE228	MOTOR FAN BALL BEARING						X	X
KSAHS1701AAA	HARD START (CAP/RELAY)	X	X	X	X	X	X	X
KSACY0101AAA	CYCLE PROTECTOR	X	X	X	X	X	X	X
KSASF0101AAA	SUPPORT FEET	X	X	X	X	X	X	X
KAACS0201PTC	START ASSIST PTC	X	X	X	X	X	X	X
KAALS0201LLS	LIQUID LINE SOLENOID	X	X	X	X	X	X	X
KAAWS0101AAA	WINTER START	X	X	X	X	X	X	X
KAACH1701AAA	CRANKCASE HTR	X	X	X	X			
KAACH1601AAA	CRANKCASE HTR					X	S	S
KSATX0201PUR	TXV PURON HSO	X	X	X				
KSATX0301PUR	TXV PURON HSO				X			
KSATX0401PUR	TXV PURON HSO					X		
KSATX0501PUR	TXV PURON HSO						X	X

† Required accessories include ball bearing fan motor, compressor start assist (CAP / Relay), crankcase heater, evaporator freeze stat, hard shut−off TXV.
X = Accessory / S − Standard

ACCESSORY USAGE GUIDELINE

ACCESSORY	REQUIRED FOR LOW–AMBIENT COOLING APPLICATIONS (Below 55°F/12.8°C)	REQUIRED FOR LONG LINE APPLICATIONS* (Over 80 ft./24.38 m)	REQUIRED FOR SEA COAST APPLICATIONS (Within 2 miles/3.22 km)
Ball Bearing Fan Motor	Yes†	No	No
Compressor Start Assist Capacitor and Relay	Yes	Yes	No
Crankcase Heater	Yes	Yes	No
Evaporator Freeze Thermostat	Yes	No	No
Hard Shut–Off TXV	Yes	Yes	Yes
Liquid Line Solenoid Valve	No	No	No
Motor Master® Control or Low–ambient Pressure Switch	Yes	No	No
Support Feet	Recommended	No	Recommended
Winter Start Control	Yes	No	No

* For tubing line sets between 80 and 200 ft. (24.38 and 60.96 m) and/or 20 ft. (6.09 m) vertical differential, refer to Residential Split–System Longline Application Guideline.

† Required for Low–Ambient Controller (full modulation feature) MotorMaster® Control.

Accessory Description and Usage (Listed Alphabetically)

1. Ball-Bearing Fan Motor

A fan motor with ball bearings which permits speed reduction while maintaining bearing lubrication.

Usage Guideline:

Required on all units when MotorMaster® is used.

2. Compressor Start Assist - Capacitor and Relay

Start capacitor and relay gives a ”hard” boost to compressor motor at each start up.

Usage Guideline:

Required for reciprocating compressors in the following applications:

- Long line
- Low ambient cooling
- Hard shut off expansion valve on indoor coil
- Liquid line solenoid on indoor coil

Required for single-phase scroll compressors in the following applications:

- Long line
- Low ambient cooling

Suggested for all compressors in areas with a history of low voltage problems.

3. Compressor Start Assist — PTC Type

Solid state electrical device which gives a ”soft” boost to the compressor at each start-up.

Usage Guideline:

Suggested in installations with marginal power supply.

4. Crankcase Heater

An electric resistance heater which mounts to the base of the compressor to keep the lubricant warm during off cycles. Improves compressor lubrication on restart and minimizes the chance of liquid slugging.

Usage Guideline:

Required in low ambient cooling applications.

Required in long line applications.

Suggested in all commercial applications.

5. Cycle Protector

The cycle protector is designed to prevent compressor short cycling. This control provides an approximate 5-minute delay after power to the compressor has been interrupted for any reason, including power outage, protector control trip, thermostat jiggling, or normal cycling.

6. Evaporator Freeze Thermostat

An SPST temperature-actuated switch that stops unit operation when evaporator reaches freeze-up conditions.

Usage Guideline:

Required when low ambient kit has been added.

7. Low-Ambient Pressure Switch Kit

A long life pressure switch which is mounted to outdoor unit service valve. It is designed to cycle the outdoor fan motor in order to maintain head pressure within normal operating limits (approximately 100 psig to 225 psig). The control will maintain working head pressure at low-ambient temperatures down to 0°F (-18°C) when properly installed.

Usage Guideline:

A Low-Ambient Pressure Switch or MotorMaster® Low-Ambient Controller must be used when cooling operation is used at outdoor temperatures below 55°F (12.8°C).

8. MotorMaster® Low-Ambient Controller

A fan-speed control device activated by a temperature sensor, designed to control condenser fan motor speed in response to the saturated, condensing temperature during operation in cooling mode only. For outdoor temperatures down to -20°F (-28.9°C), it maintains condensing temperature at 100°F ±10°F (37.8°C ± 5.5°C).

Usage Guideline:

A MotorMaster® Low Ambient Controller or Low-Ambient Pressure Switch must be used when cooling operation is used at outdoor temperatures below 55°F (12.8°C).

Suggested for all commercial applications.

9. Outdoor Air Temperature Sensor

Designed for use with Carrier Thermostats listed in this publication. This device enables the thermostat to display the outdoor temperature. This device also

is required to enable special thermostat features such as auxiliary heat lock out.

Usage Guideline:

Suggested for all Carrier thermostats listed in this publication.

Accessory Description and Usage (Listed Alphabetically) (Continued)

10. Support Feet

Four stick-on plastic feet that raise the unit 4 in. (101.6 mm) above the mounting pad. This allows sand, dirt, and other debris to be flushed from the unit base, minimizing corrosion.

Usage Guideline:

Suggested in the following applications:

Coastal installations.

Windy areas or where debris is normally circulating.

Rooftop installations.

For improved sound ratings.

11. Thermostatic Expansion Valve (TXV)

A modulating flow-control valve which meters refrigerant liquid flow rate into the evaporator in response to the superheat of the refrigerant gas leaving the evaporator.

Kit includes valve, adapter tubes, and external equalizer tube. Hard shut off types are available.

NOTE: When using a hard shut off TXV with single phase reciprocating compressors, a Compressor Start Assist Capacitor and Relay is required.

Usage Guideline:

Required to achieve AHRI ratings in certain equipment combinations. Refer to combination ratings.

Hard shut off TXV or LLS required in air conditioner long line applications.

Required for use on all zoning systems.

12. Time-Delay Relay

An SPST delay relay which briefly continues operation of indoor blower motor to provide additional cooling after the compressor cycles off.

NOTE: Most indoor unit controls include this feature. For those that do not, use the guideline below.

Usage Guideline:

For improved efficiency ratings for certain combinations of indoor and outdoor units. Refer to AHRI Unitary Directory.

13. Winter Start Control

This control is designed to alleviate nuisance opening of the low-pressure switch by bypassing it for the first 3 minutes of operation.

ELECTRICAL DATA

UNIT SIZE	V/PH	OPER VOLTS*		COMPR		FAN	MCA	MIN WIRE SIZE† 60° C	MIN WIRE SIZE† 75° C	MAX LENGTH ft. (m)‡ 60° C	MAX LENGTH ft. (m)‡ 75° C	MAX FUSE** or CKT BRK AMPS
		MAX	MIN	LRA	RLA	FLA						
18–30	208/230/1–60	253	197	48.0	9.0	0.50	11.8	14	14	67 (20.4)	64 (19.5)	20
24–30				58.3	13.5	0.70	17.6	14	14	46 (14.0)	43 (13..1)	25
30–30				64.0	12.8	0.70	16.7	14	14	44 (13.4)	41 (12.5)	25
36–30				77.0	14.1	0.50	18.1	12	12	57 (17.4)	54 (16.5)	30
42–30				112.0	17.9	1.20	23.6	10	10	85 (25.9)	81 (24.7)	40
48–30				109.0	19.9	1.20	26.1	10	10	70 (21.3)	67 (20.4)	40
60–30				135.0	21.4	1.20	28.0	8	10	91 (27.7)	56 (17.1)	40

* Permissible limits of the voltage range at which the unit will operate satisfactorily

† If wire is applied at ambient greater than 30°C, consult table 310–16 of the NEC (NFPA 70). The ampacity of non–metallic–sheathed cable (NM), trade name ROMEX, shall be that of 60°C conditions, per the NEC (NFPA 70) Article 336–26. If other than uncoated (no–plated), 60 or 75°C insulation, copper wire (solid wire for 10 AWG or smaller, stranded wire for larger than 10 AWG) is used, consult applicable tables of the NEC (NFPA 70).

‡ Length shown is as measured one way along wire path between unit and service panel for voltage drop not to exceed 2%.

** Time–Delay fuse.

FLA – Full Load Amps
LRA – Locked Rotor Amps
MCA – Minimum Circuit Amps
RLA – Rated Load Amps
NOTE: Control circuit is 24–V on all units and requires external power source. Copper wire must be used from service disconnect to unit.
All motors/compressors contain internal overload protection.

Complies with 2010 requirements of ASHRAE Standards 90.1

A-WEIGHTED SOUND POWER LEVEL (dBA)

Unit Size – Voltage, Series	Standard Rating (dBA)	TYPICAL OCTAVE BAND SPECTRUM (dBA without tone adjustment)						
		125	250	500	1000	2000	4000	8000
18–30	73	49.5	58.5	64.5	69.0	63.0	59.5	52.4
24–30	74	54.5	62.0	67.0	71.5	66.0	62.0	53.0
30–30	74	56.0	62.5	66.0	68.5	64.5	61.0	53.5
36–30	72	52.0	61.0	64.0	66.0	61.0	58.5	51.5
42–30	74	56.5	61.5	65.0	66.5	63.5	61.0	56.5
48–30	73	58.0	61.0	65.0	66.0	62.0	58.0	51.0
60–30	74	56.5	62.5	66.5	68.0	63.0	59.5	51.5

NOTE: Tested in accordance with AHRI Standard 270–08 (not listed in AHRI).

CHARGING SUBCOOLING (TXV-TYPE EXPANSION DEVICE)

UNIT SIZE–VOLTAGE, SERIES	REQUIRED SUBCOOLING °F (°C)
18–30	10 (5.6)
24–30	10 (5.6)
30–30	10 (5.6)
36–30	10 (5.6)
42–30	9 (5.0)
48–30	10 (5.6)
60–30	9 (5.0)

DIMENSIONS - ENGLISH

UNIT	SERIES	ELECTRICAL CHARACTERISTICS				A	B	C	D	E	F	G	K	L	M	N	P	OPERATING WEIGHT (lbs)	SHIPPING WEIGHT (lbs)	SHIPPING DIMENSIONS (L x W x H)
24ACC618	0	X	O	O	O	25 3/4"	28 11/16"	3 3/4"	3/4"	4 7/16"	21 1/4"	7 13/16"	2 13/16"	1/2"	13 1/4"	13 3/4"	12 3/4"	136	163	26 7/8" X 30 1/16" X 32 9/16"
24ACC624	0	X	O	O	O	31 3/16"	28 5/16"	3 3/4"	3/4"	6 9/16"	24 11/16"	9 1/8"	2 13/16"	1/2"	15 5/8"	15 1/2"	14"	163	198	32 3/8" X 35 1/2" X 32 9/16"
24ACC630	0	X	O	O	O	31 3/16"	32 5/16"	3 3/4"	3/4"	6 9/16"	24 11/16"	9 1/8"	2 13/16"	1/2"	16 1/2"	15"	14 3/4"	167	204	32 3/8" X 35 1/2" X 35 15/16"
24ACC636	0	X	O	O	O	35"	28 5/16"	3 7/8"	7/8"	6 9/16"	28 7/16"	9 1/8"	2 15/16"	5/8"	18 1/4"	16 7/8"	14"	180	219	36 1/8" X 39 5/16" X 32 9/16"
24ACC642	0	X	O	O	O	35"	39 1/8"	3 7/8"	7/8"	6 9/16"	28 7/16"	9 1/8"	2 15/16"	5/8"	18"	16"	17 1/2"	234	281	36 1/8" X 39 5/16" X 42 3/4"
24ACC648	0	X	O	O	O	35"	32 5/16"	3 7/8"	7/8"	6 9/16"	28 7/16"	9 1/8"	2 15/16"	5/8"	17"	17 1/2"	14"	248	291	36 1/8" X 39 5/16" X 35 15/16"
24ACC660	0	X	O	O	O	35"	45 15/16"	3 7/8"	7/8"	6 9/16"	28 7/16"	9 1/8"	2 15/16"	5/8"	17 7/8"	18 5/8"	20 1/4"	337	372	36 1/8" X 39 5/16" X 49 9/16"
		208-230-1-60	230-1-60	208/230-3-60	460-3-60															

X = YES
O = NO

NOTES:

1. ALLOW 30" CLEARANCE TO SERVICE SIDE OF UNIT, 48" ABOVE UNIT, 6" ON ONE SIDE, 12" ON REMAINING SIDE, AND 24" BETWEEN UNITS FOR PROPER AIRFLOW.
2. MINIMUM OUTDOOR OPERATING AMBIENT IN COOLING MODE IS 55°F, MAX. 125°F.
3. SERIES DESIGNATION IS THE 13TH POSITION OF THE UNIT MODEL NUMBER.
4. CENTER OF GRAVITY ⊕.
5. ALL DIMENSIONS ARE IN "INCHES" UNLESS NOTED.

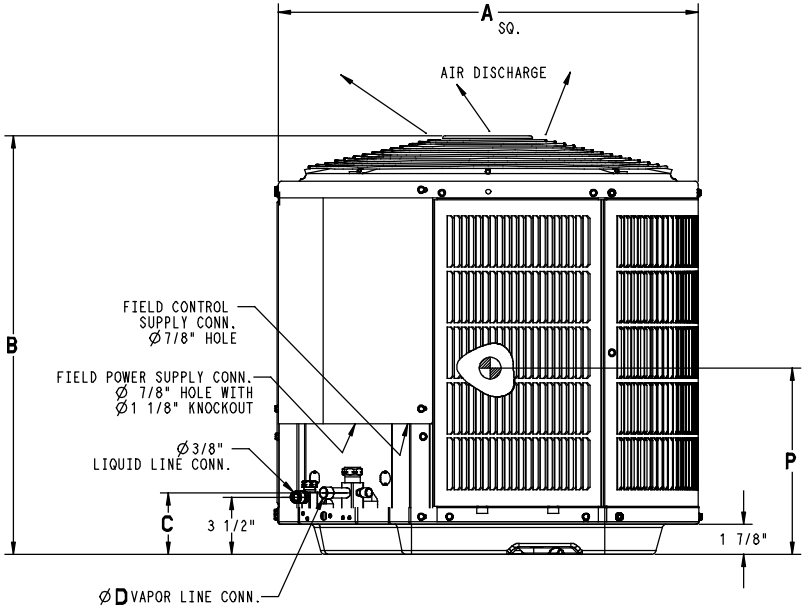

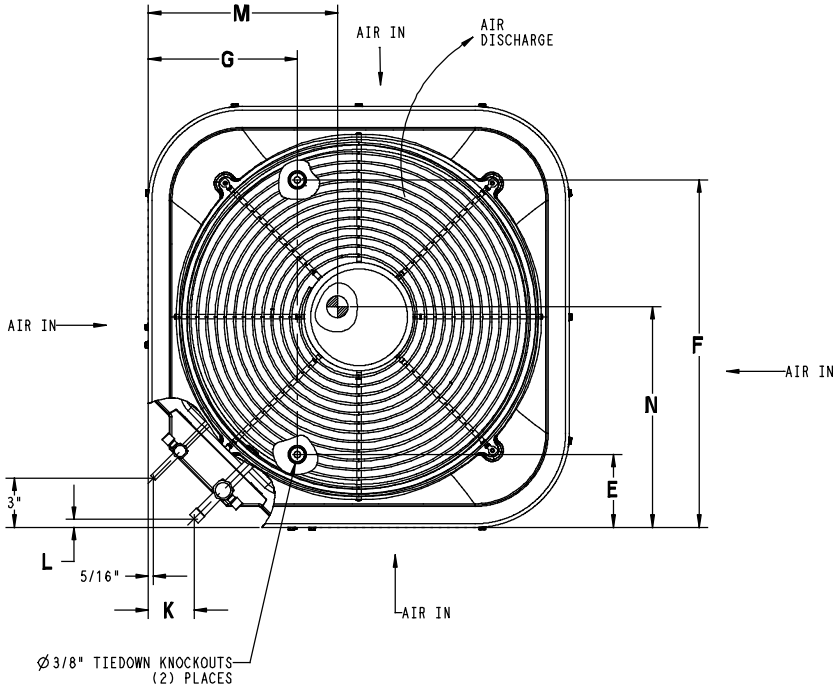

UNIT SIZE	MINIMUM MOUNTING PAD DIMENSIONS
18	26" X 26"
24,30	31 1/2" X 31 1/2"
36 THRU 60	35" X 35"

DIMENSIONS - SI

UNIT	SERIES	ELECTRICAL CHARACTERISTICS				A	B	C	D	E	F	G	K	L	M	N	P	OPERATING WEIGHT (Kgs)	SHIPPING WEIGHT (Kgs)	SHIPPING DIMENSIONS (L x W x H)
24ACC618	0	X	O	O	O	654.0	728.7	95.2	19.0	112.7	539.8	198.4	71.4	12.7	336.6	349.3	323.9	61.7	73.9	682.6 X 763.6 X 827.1
24ACC624	0	X	O	O	O	792.2	719.2	95.2	19.0	166.7	627.1	231.8	71.4	12.7	396.9	393.7	355.6	73.9	89.8	822.3 X 901.7 X 827.1
24ACC630	0	X	O	O	O	792.2	820.8	95.2	19.0	166.7	627.1	231.8	71.4	12.7	419.1	381.0	374.7	75.7	92.5	822.3 X 901.7 X 912.8
24ACC636	0	X	O	O	O	889.0	719.2	98.6	22.2	166.7	722.3	231.8	74.6	15.9	463.6	428.6	355.6	81.6	99.3	917.6 X 998.6 X 827.1
24ACC642	0	X	O	O	O	889.0	993.8	98.6	22.2	166.7	722.3	231.8	74.6	15.9	457.2	406.4	444.5	106.1	127.5	917.6 X 998.6 X 1085.8
24ACC648	0	X	O	O	O	889.0	820.8	98.6	22.2	166.7	722.3	231.8	74.6	15.9	431.8	444.5	355.6	112.5	132.0	917.6 X 998.6 X 912.8
24ACC660	0	X	O	O	O	889.0	1166.8	98.6	22.2	166.7	722.3	231.8	74.6	15.9	454.0	473.1	514.4	152.9	168.7	917.6 X 998.6 X 1173.2
		208-230-1-60	230-1-60	208/230-3-60	460-3-60															

X = YES
O = NO

NOTES:

1. ALLOW 762.0 CLEARANCE TO SERVICE SIDE OF UNIT, 1219.2 ABOVE UNIT, 152.4 ON ONE SIDE, 304.8 ON REMAINING SIDE, AND 609.6 BETWEEN UNITS FOR PROPER AIRFLOW.
2. MINIMUM OUTDOOR OPERATING AMBIENT IN COOLING MODE IS 13°C, MAX. 52°C.
3. SERIES DESIGNATION IS THE 10TH POSITION OF THE UNIT MODEL NUMBER.
4. CENTER OF GRAVITY ⊕.
5. ALL DIMENSIONS ARE IN "MM" UNLESS NOTED.

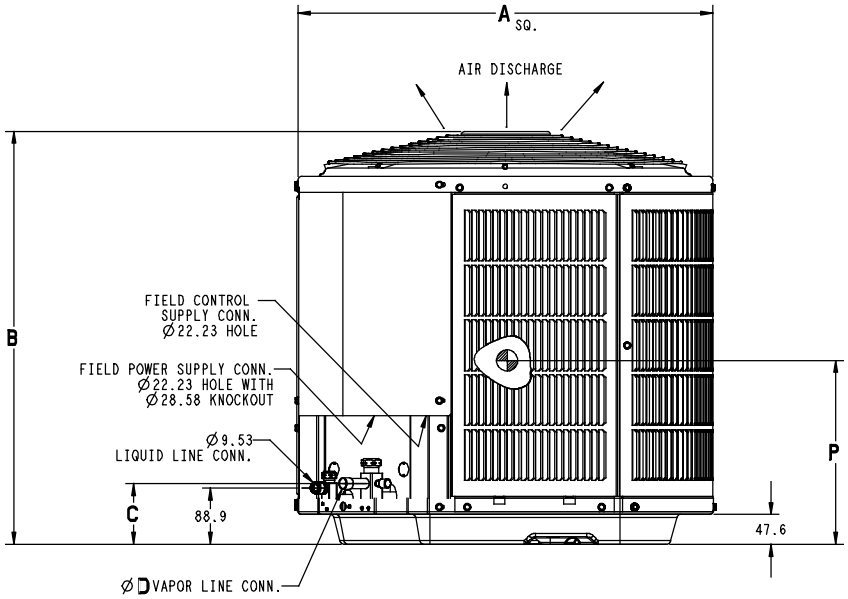

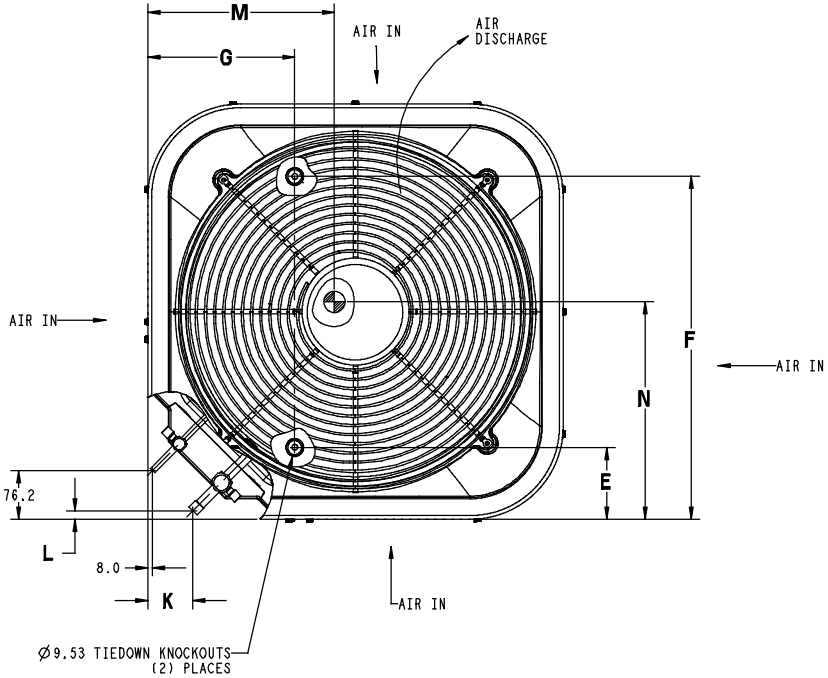

UNIT SIZE	MINIMUM MOUNTING PAD DIMENSIONS
18	660.4 X 660.4
24,30	800.1 X 800.1
36 THRU 60	889.0 X 889.0

CLEARANCES

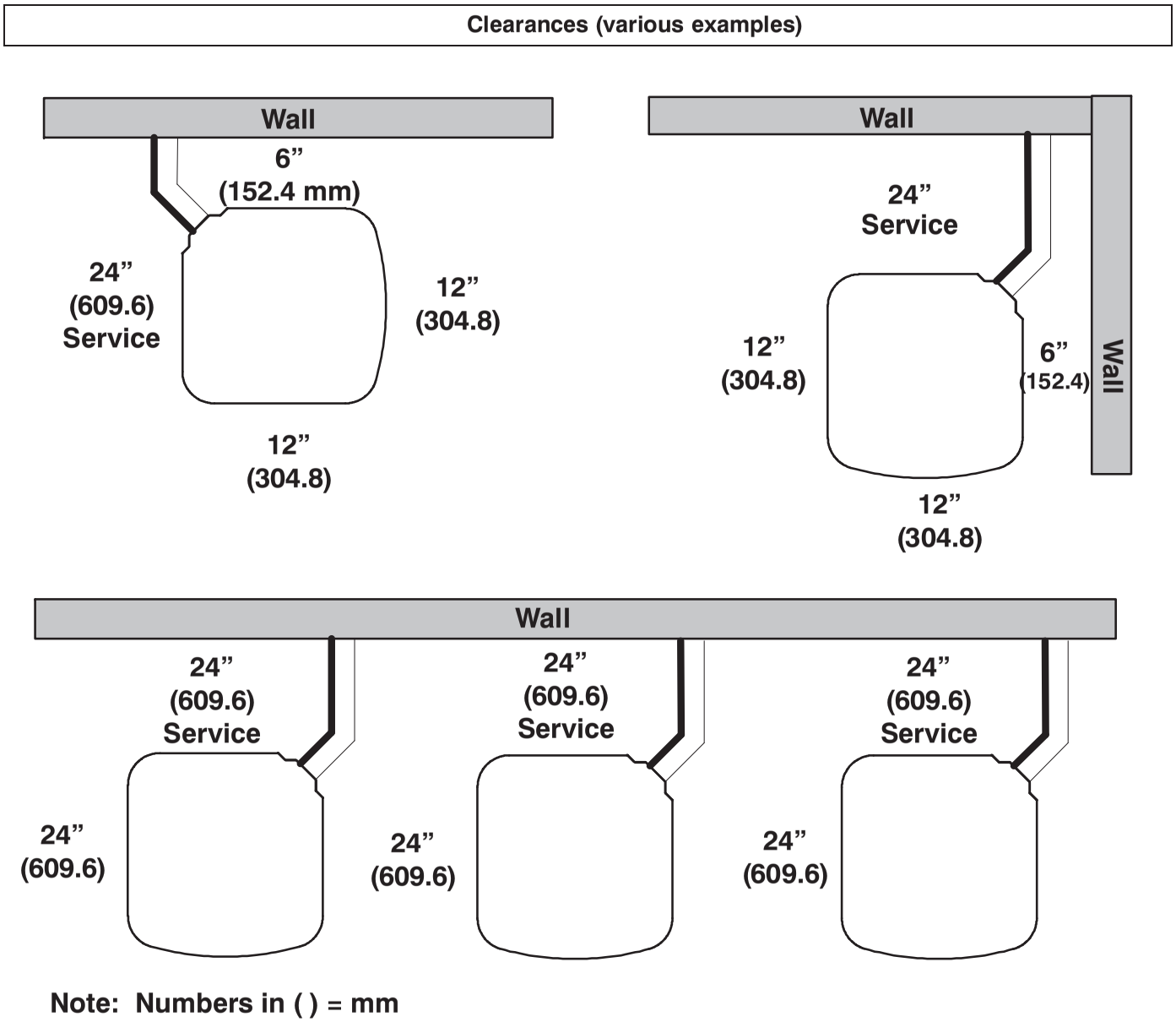

IMPORTANT: When installing multiple units in an alcove, roof well, or partially enclosed area, ensure there is adequate ventilation to prevent re-circulation of discharge air.

COMBINATION RATINGS

AHRI Ref. No.	Model Number	Indoor Model	Furnace Model	Capacity	EER	SEER
3656230	24ACC618A**30	†CNPV*1917A**+TDR		18,000	12.0	14.5
3655227	24ACC618A**30	CAP**1814A**	58CV(A,X)070−12	18,000	12.5	15.5
3655228	24ACC618A**30	CAP**1814A**	58PH*045−08	18,000	13.0	15.5
4764816	24ACC618A**30	CAP**1814A**	59*P5A040E14**10	18,000	12.5	15.2
3655229	24ACC618A**30	CAP**1814A**+TDR		18,000	11.5	13.5
3655230	24ACC618A**30	CAP**2414A**	58CV(A,X)070−12	18,000	13.0	16.0
3655232	24ACC618A**30	CAP**2414A**	58PH*045−08	18,000	13.0	16.0
4764817	24ACC618A**30	CAP**2414A**	59*P5A040E14**10	18,000	12.7	15.5
3655234	24ACC618A**30	CAP**2414A**+TDR		18,000	11.5	14.0
3655236	24ACC618A**30	CAP**2417A**	58CV(A,X)070−12	18,000	13.0	16.0
3655238	24ACC618A**30	CAP**2417A**	58CV(A,X)090−16	18,000	13.0	16.0
3655240	24ACC618A**30	CAP**2417A**	58ME(B,C)060−12	18,000	13.0	16.0
3655243	24ACC618A**30	CAP**2417A**	58MEB040−12	18,000	13.0	16.0
3655245	24ACC618A**30	CAP**2417A**	58MV(B,C)060−14	18,000	13.0	16.0
3655247	24ACC618A**30	CAP**2417A**	58PH*045−08	18,000	13.0	16.0
3655253	24ACC618A**30	CAP**2417A**	58UVB060−14	18,000	13.0	16.0
3655249	24ACC618A**30	CAP**2417A**	58VLR105−12	18,000	13.0	16.0
3655251	24ACC618A**30	CAP**2417A**	58VMR105−12	18,000	13.0	16.0
4764818	24ACC618A**30	CAP**2417A**	59*N*A060V17**14	18,000	13.0	16.0
4764819	24ACC618A**30	CAP**2417A**	59*N*A080V17**14	18,000	13.0	16.0
4764820	24ACC618A**30	CAP**2417A**	59*P5A040E14**10	18,000	12.7	15.5
4138206	24ACC618A**30	CAP**2417A**	OVLAAB036098	18,000	13.0	16.0
4138205	24ACC618A**30	CAP**2417A**	OVMAAB036098	18,000	13.0	16.0
3655255	24ACC618A**30	CAP**2417A**+TDR		18,000	11.5	14.0
3655741	24ACC618A**30	CNPH*2417A**	58CV(A,X)070−12	18,000	13.0	16.0
3655743	24ACC618A**30	CNPH*2417A**	58CV(A,X)090−16	18,000	13.0	16.0
4138204	24ACC618A**30	CNPH*2417A**	58HDV040−−12	18,400	13.0	15.5
3655748	24ACC618A**30	CNPH*2417A**	58ME(B,C)060−12	18,000	13.0	16.0
3655751	24ACC618A**30	CNPH*2417A**	58MEB040−12	18,000	13.0	16.0
3655753	24ACC618A**30	CNPH*2417A**	58MV(B,C)060−14	18,000	13.0	16.0
3655755	24ACC618A**30	CNPH*2417A**	58MV(B,C)080−14	18,000	13.0	16.0
3655760	24ACC618A**30	CNPH*2417A**	58MVB040−14	18,000	13.0	16.0
3655762	24ACC618A**30	CNPH*2417A**	58PH*045−08	18,000	13.0	16.0
3655764	24ACC618A**30	CNPH*2417A**	58VLR105−12	18,000	13.0	16.0
3655766	24ACC618A**30	CNPH*2417A**	58VMR105−12	18,000	13.0	16.0
4764829	24ACC618A**30	CNPH*2417A**	59*N*A060V17**14	18,000	13.0	16.0
4764830	24ACC618A**30	CNPH*2417A**	59*N*A080V17**14	18,000	13.0	16.0
4764831	24ACC618A**30	CNPH*2417A**	59*P5A040E14**10	18,000	12.7	15.5
4138212	24ACC618A**30	CNPH*2417A**	OVLAAB036098	18,000	13.0	16.0
4138211	24ACC618A**30	CNPH*2417A**	OVMAAB036098	18,400	13.0	16.0
3655775	24ACC618A**30	CNPH*2417A**+TDR		18,000	12.0	14.5
3656211	24ACC618A**30	CNPV*1814A**	58CV(A,X)070−12	18,000	13.0	15.5
3656212	24ACC618A**30	CNPV*1814A**	58PH*045−08	18,000	13.0	15.5
4764821	24ACC618A**30	CNPV*1814A**	59*P5A040E14**10	18,000	12.7	15.5
3656213	24ACC618A**30	CNPV*1814A**+TDR		18,000	11.5	14.0
3656214	24ACC618A**30	CNPV*1917A**	58CV(A,X)070−12	18,000	13.0	16.0
3656216	24ACC618A**30	CNPV*1917A**	58CV(A,X)090−16	18,000	13.0	16.0
4138201	24ACC618A**30	CNPV*1917A**	58HDV040−−12	18,800	13.0	16.0
4138202	24ACC618A**30	CNPV*1917A**	58HDV060−−12	18,800	13.0	16.0
3656218	24ACC618A**30	CNPV*1917A**	58ME(B,C)060−12	18,000	13.0	16.0
3656220	24ACC618A**30	CNPV*1917A**	58MEB040−12	18,000	13.0	16.0
3656222	24ACC618A**30	CNPV*1917A**	58MV(B,C)060−14	18,000	13.0	16.0
3656224	24ACC618A**30	CNPV*1917A**	58PH*045−08	18,000	13.0	16.0
3656228	24ACC618A**30	CNPV*1917A**	58UVB060−14	18,000	13.0	16.0
3656226	24ACC618A**30	CNPV*1917A**	58VLR105−12	18,000	13.0	16.0
3656227	24ACC618A**30	CNPV*1917A**	58VMR105−12	18,000	13.0	16.0
4764822	24ACC618A**30	CNPV*1917A**	59*N*A060V17**14	18,000	13.0	16.0
4764823	24ACC618A**30	CNPV*1917A**	59*N*A080V17**14	18,000	13.0	16.0
4764824	24ACC618A**30	CNPV*1917A**	59*P5A040E14**10	18,000	13.0	16.0
4138208	24ACC618A**30	CNPV*1917A**	OVLAAB036098	18,000	13.0	16.0
4138207	24ACC618A**30	CNPV*1917A**	OVMAAB036098	18,400	13.0	16.0
3656232	24ACC618A**30	CNPV*2414A**	58CV(A,X)070−12	18,000	13.0	16.0
3656234	24ACC618A**30	CNPV*2414A**	58PH*045−08	18,000	13.0	16.0
4764825	24ACC618A**30	CNPV*2414A**	59*P5A040E14**10	18,000	12.7	15.5
3656236	24ACC618A**30	CNPV*2414A**+TDR		18,000	11.5	14.0
3656238	24ACC618A**30	CNPV*2417A**	58CV(A,X)070−12	18,000	13.0	16.0
3656240	24ACC618A**30	CNPV*2417A**	58CV(A,X)090−16	18,000	13.0	16.0
4138203	24ACC618A**30	CNPV*2417A**	58HDV040−−12	18,400	13.0	15.5
3656242	24ACC618A**30	CNPV*2417A**	58ME(B,C)060−12	18,000	13.0	16.0
3656245	24ACC618A**30	CNPV*2417A**	58MEB040−12	18,000	13.0	16.0
3656247	24ACC618A**30	CNPV*2417A**	58MV(B,C)060−14	18,000	13.0	16.0
3656249	24ACC618A**30	CNPV*2417A**	58PH*045−08	18,000	13.0	16.0

See notes on page 46

COMBINATION RATINGS CONTINUED

AHRI Ref. No.	Model Number	Indoor Model	Furnace Model	Capacity	EER	SEER
3656255	24ACC618A**30	CNPV*2417A**	58UVB060−14	18,000	13.0	16.0
3656251	24ACC618A**30	CNPV*2417A**	58VLR105−12	18,000	13.0	16.0
3656253	24ACC618A**30	CNPV*2417A**	58VMR105−12	18,000	13.0	16.0
4764826	24ACC618A**30	CNPV*2417A**	59*N*A060V17**14	18,000	13.0	16.0
4764827	24ACC618A**30	CNPV*2417A**	59*N*A080V17**14	18,000	13.0	16.0
4764828	24ACC618A**30	CNPV*2417A**	59*P5A040E14**10	18,000	12.7	15.5
4138210	24ACC618A**30	CNPV*2417A**	OVLAAB036098	18,000	13.0	16.0
4138209	24ACC618A**30	CNPV*2417A**	OVMAAB036098	18,400	13.0	16.0
3656257	24ACC618A**30	CNPV*2417A**+TDR		18,000	11.5	14.0
4690387	24ACC618A**30	CNPV*3014A**	58CV(A,X)070−12	18,000	13.0	16.0
3858328	24ACC618A**30	CNPV*3017A**	58MV(B,C)060−14	18,000	13.0	16.0
3858329	24ACC618A**30	CNPV*3017A**	58UVB060−14	18,000	13.0	16.0
3656701	24ACC618A**30	CSPH*2412A**	58CV(A,X)070−12	18,000	13.0	16.0
3656702	24ACC618A**30	CSPH*2412A**	58CV(A,X)090−16	18,000	13.0	16.0
3656703	24ACC618A**30	CSPH*2412A**	58HDV040−−12	18,000	13.0	15.5
3656705	24ACC618A**30	CSPH*2412A**	58HDV060−−12	18,000	13.0	15.5
3656707	24ACC618A**30	CSPH*2412A**	58ME(B,C)060−12	18,000	13.0	16.0
3656708	24ACC618A**30	CSPH*2412A**	58MEB040−12	18,000	13.0	16.0
3656709	24ACC618A**30	CSPH*2412A**	58MV(B,C)060−14	18,000	13.0	16.0
3656710	24ACC618A**30	CSPH*2412A**	58MV(B,C)080−14	18,000	13.0	16.0
3656711	24ACC618A**30	CSPH*2412A**	58MVB040−14	18,000	13.0	16.0
3656712	24ACC618A**30	CSPH*2412A**	58PH*045−08	18,000	13.0	16.0
3656713	24ACC618A**30	CSPH*2412A**	58VLR105−12	18,000	13.0	16.0
3656715	24ACC618A**30	CSPH*2412A**	58VMR105−12	18,000	13.0	16.0
4764832	24ACC618A**30	CSPH*2412A**	59*N*A060V17**14	18,000	13.0	16.0
4764833	24ACC618A**30	CSPH*2412A**	59*N*A080V17**14	18,000	13.0	16.0
4764834	24ACC618A**30	CSPH*2412A**	59*P5A040E14**10	18,000	12.7	15.5
4138214	24ACC618A**30	CSPH*2412A**	OVLAAB036098	18,000	13.0	16.0
4138213	24ACC618A**30	CSPH*2412A**	OVMAAB036098	18,400	13.0	16.0
3656719	24ACC618A**30	CSPH*2412A**+TDR		18,000	12.0	14.0
3804416	24ACC618A**30	FB4CNF018		18,000	12.5	14.5
3693332	24ACC618A**30	FB4CNF018+TXV		18,000	13.0	15.5
3804417	24ACC618A**30	FB4CNF024		18,000	12.5	14.5
3693333	24ACC618A**30	FB4CNF024+TXV		18,000	13.0	15.5
3657088	24ACC618A**30	FE4ANF002+UI		18,000	13.0	16.0
3657095	24ACC618A**30	FF1ENP018		18,000	11.5	14.0
3657096	24ACC618A**30	FF1ENP019		18,000	12.5	15.5
3657097	24ACC618A**30	FF1ENP024		18,000	11.5	14.0
3657099	24ACC618A**30	FF1ENP025		18,000	13.0	16.0
3657137	24ACC618A**30	FV4CNF002		18,000	13.0	16.0
3657167	24ACC618A**30	FX4DNF019		18,000	13.0	16.0
3657168	24ACC618A**30	FX4DNF025		18,000	13.0	16.0
3804418	24ACC618A**30	FY5BNF018		18,000	12.0	14.0
3693340	24ACC618A**30	FY5BNF018+TXV		18,000	12.0	14.5
3804419	24ACC618A**30	FY5BNF024		18,000	12.0	14.0
3693341	24ACC618A**30	FY5BNF024+TXV		18,000	12.0	14.5
3656308	24ACC624A**30	†CNPV*3117A**+TDR		23,600	12.0	14.5
3655231	24ACC624A**30	CAP**2414A**	58CV(A,X)070−12	22,800	12.5	15.5
3655233	24ACC624A**30	CAP**2414A**	58PH*045−08	23,000	12.5	15.5
4764835	24ACC624A**30	CAP**2414A**	59*P5A040E14**10	23,200	12.0	14.5
3655235	24ACC624A**30	CAP**2414A**+TDR		23,000	11.5	14.0
3655237	24ACC624A**30	CAP**2417A**	58CV(A,X)070−12	22,800	12.5	15.5
3655239	24ACC624A**30	CAP**2417A**	58CV(A,X)090−16	22,800	13.0	16.0
3655241	24ACC624A**30	CAP**2417A**	58ME(B,C)060−12	23,400	13.0	16.0
3655242	24ACC624A**30	CAP**2417A**	58ME(B,C)080−12	23,200	13.0	16.0
3655244	24ACC624A**30	CAP**2417A**	58MEB040−12	23,400	13.0	16.0
3655246	24ACC624A**30	CAP**2417A**	58MV(B,C)060−14	23,200	13.0	16.0
3655248	24ACC624A**30	CAP**2417A**	58PH*045−08	23,000	12.5	15.5
3655254	24ACC624A**30	CAP**2417A**	58UVB060−14	23,200	13.0	16.0
3655250	24ACC624A**30	CAP**2417A**	58VLR105−12	23,000	13.0	16.0
3655252	24ACC624A**30	CAP**2417A**	58VMR105−12	22,800	13.0	15.5
4764836	24ACC624A**30	CAP**2417A**	59*N*A060V17**14	23,000	12.7	15.5
4764837	24ACC624A**30	CAP**2417A**	59*N*A080V17**14	23,000	12.7	15.5
4764838	24ACC624A**30	CAP**2417A**	59*P5A040E14**10	23,200	12.0	14.5
4764839	24ACC624A**30	CAP**2417A**	59*P5A060E17**14	23,000	13.0	16.0
4138226	24ACC624A**30	CAP**2417A**	OVLAAB036098	23,200	13.0	15.5
4138225	24ACC624A**30	CAP**2417A**	OVMAAB036098	23,200	13.0	15.5
3655256	24ACC624A**30	CAP**2417A**+TDR		23,000	11.5	14.0
3655257	24ACC624A**30	CAP**3014A**	58CV(A,X)070−12	22,800	13.0	16.0
3655259	24ACC624A**30	CAP**3014A**	58PH*045−08	23,200	12.5	15.5
4764840	24ACC624A**30	CAP**3014A**	59*P5A040E14**10	23,400	12.0	14.5

See notes on page 46

COMBINATION RATINGS CONTINUED

AHRI Ref. No.	Model Number	Indoor Model	Furnace Model	Capacity	EER	SEER
3655260	24ACC624A**30	CAP**3014A**+TDR		23,200	11.5	14.0
3655262	24ACC624A**30	CAP**3017A**	58CV(A,X)070−12	23,000	13.0	16.0
3655264	24ACC624A**30	CAP**3017A**	58CV(A,X)090−16	23,000	13.0	16.0
3655266	24ACC624A**30	CAP**3017A**	58ME(B,C)060−12	23,600	13.0	16.0
3655268	24ACC624A**30	CAP**3017A**	58ME(B,C)080−12	23,400	13.0	16.0
3655271	24ACC624A**30	CAP**3017A**	58MEB040−12	23,600	13.0	16.0
3655273	24ACC624A**30	CAP**3017A**	58MV(B,C)060−14	23,200	13.0	16.0
3655275	24ACC624A**30	CAP**3017A**	58PH*045−08	23,200	13.0	16.0
3655281	24ACC624A**30	CAP**3017A**	58UVB060−14	23,200	13.0	16.0
3655277	24ACC624A**30	CAP**3017A**	58VLR105−12	23,200	13.0	16.0
3655279	24ACC624A**30	CAP**3017A**	58VMR105−12	23,000	13.0	16.0
4764841	24ACC624A**30	CAP**3017A**	59*N*A060V17**14	23,200	13.0	16.0
4764842	24ACC624A**30	CAP**3017A**	59*N*A080V17**14	23,000	13.0	16.0
4764843	24ACC624A**30	CAP**3017A**	59*P5A040E14**10	23,400	12.0	14.5
4764844	24ACC624A**30	CAP**3017A**	59*P5A060E17**14	23,400	13.0	16.0
4138228	24ACC624A**30	CAP**3017A**	OVLAAB036098	23,400	13.0	16.0
4138227	24ACC624A**30	CAP**3017A**	OVMAAB036098	23,400	13.0	15.5
3655283	24ACC624A**30	CAP**3017A**+TDR		23,200	11.5	14.0
3655285	24ACC624A**30	CAP**3614A**	58CV(A,X)070−12	23,000	13.0	16.0
3655288	24ACC624A**30	CAP**3614A**	58PH*045−08	23,200	13.0	16.0
3655290	24ACC624A**30	CAP**3614A**+TDR		23,200	11.5	14.0
3655293	24ACC624A**30	CAP**3617A**	58CV(A,X)070−12	23,000	13.0	16.0
3655296	24ACC624A**30	CAP**3617A**	58CV(A,X)090−16	23,000	13.0	16.0
3655299	24ACC624A**30	CAP**3617A**	58ME(B,C)060−12	23,800	13.0	16.0
3655302	24ACC624A**30	CAP**3617A**	58ME(B,C)080−12	23,600	13.0	16.0
3655307	24ACC624A**30	CAP**3617A**	58MEB040−12	23,600	13.0	16.0
3655310	24ACC624A**30	CAP**3617A**	58MV(B,C)060−14	23,400	13.0	16.0
3655313	24ACC624A**30	CAP**3617A**	58PH*045−08	23,400	13.0	16.0
3655323	24ACC624A**30	CAP**3617A**	58UVB060−14	23,400	13.0	16.0
3655317	24ACC624A**30	CAP**3617A**	58VLR105−12	23,200	13.0	16.0
3655320	24ACC624A**30	CAP**3617A**	58VMR105−12	23,000	13.0	16.0
3655326	24ACC624A**30	CAP**3617A**+TDR		23,200	11.5	14.0
3655329	24ACC624A**30	CAP**3619A**	58HDV040−−12	23,400	12.5	15.5
3655332	24ACC624A**30	CAP**3619A**	58HDV060−−12	23,600	12.5	15.5
3655335	24ACC624A**30	CAP**3619A**+TDR		23,200	11.5	14.0
3655338	24ACC624A**30	CAP**3621A**	58CV(A,X)090−16	23,000	13.0	16.0
3655341	24ACC624A**30	CAP**3621A**	58CV(A,X)110−20	23,200	13.0	16.0
3655344	24ACC624A**30	CAP**3621A**	58ME(B,C)060−12	23,800	13.0	16.0
3655347	24ACC624A**30	CAP**3621A**	58ME(B,C)080−12	23,600	13.0	16.0
3655353	24ACC624A**30	CAP**3621A**	58MEB040−12	23,800	13.0	16.0
3655356	24ACC624A**30	CAP**3621A**	58MV(B,C)060−14	23,400	13.0	16.0
3655359	24ACC624A**30	CAP**3621A**	58MV(B,C)080−14	23,000	13.0	16.0
3655362	24ACC624A**30	CAP**3621A**	58MV(B,C)080−20	22,800	13.0	16.0
3655365	24ACC624A**30	CAP**3621A**	58MV(B,C)100−20	23,000	13.0	16.0
3655381	24ACC624A**30	CAP**3621A**	58UVB060−14	23,400	13.0	16.0
3655384	24ACC624A**30	CAP**3621A**	58UVB080−14	23,000	13.0	16.0
3655387	24ACC624A**30	CAP**3621A**	58UVB080−20	22,800	13.0	16.0
3655390	24ACC624A**30	CAP**3621A**	58UVB100−20	23,000	13.0	16.0
3655373	24ACC624A**30	CAP**3621A**	58VLR105−12	23,400	13.0	16.0
3655377	24ACC624A**30	CAP**3621A**	58VMR105−12	23,000	13.0	16.0
3655393	24ACC624A**30	CAP**3621A**+TDR		23,200	11.5	14.0
3655742	24ACC624A**30	CNPH*2417A**	58CV(A,X)070−12	22,800	12.5	15.5
3655744	24ACC624A**30	CNPH*2417A**	58CV(A,X)090−16	22,800	13.0	16.0
3655745	24ACC624A**30	CNPH*2417A**	58CV(A,X)110−20	22,800	12.5	15.5
3655746	24ACC624A**30	CNPH*2417A**	58CV(A,X)135−22	22,800	12.5	15.5
3655747	24ACC624A**30	CNPH*2417A**	58CV(A,X)155−22	22,800	12.5	15.5
4138220	24ACC624A**30	CNPH*2417A**	58HDV040−−12	23,200	12.5	15.0
3655749	24ACC624A**30	CNPH*2417A**	58ME(B,C)060−12	23,200	13.0	16.0
3655750	24ACC624A**30	CNPH*2417A**	58ME(B,C)080−12	23,000	13.0	16.0
3655752	24ACC624A**30	CNPH*2417A**	58MEB040−12	23,200	13.0	16.0
3655754	24ACC624A**30	CNPH*2417A**	58MV(B,C)060−14	23,000	12.5	15.5
3655756	24ACC624A**30	CNPH*2417A**	58MV(B,C)080−14	22,800	12.5	15.5
3655757	24ACC624A**30	CNPH*2417A**	58MV(B,C)080−20	22,600	12.5	15.5
3655758	24ACC624A**30	CNPH*2417A**	58MV(B,C)100−20	22,800	12.5	15.5
3655759	24ACC624A**30	CNPH*2417A**	58MV(B,C)120−20	23,000	13.0	16.0
3655761	24ACC624A**30	CNPH*2417A**	58MVB040−14	22,800	12.5	15.5
3655763	24ACC624A**30	CNPH*2417A**	58PH*045−08	23,000	12.5	15.5
3655765	24ACC624A**30	CNPH*2417A**	58VLR105−12	23,000	13.0	16.0
3655767	24ACC624A**30	CNPH*2417A**	58VMR105−12	22,800	12.5	15.5
4764859	24ACC624A**30	CNPH*2417A**	59*N*A060V17**14	23,000	12.7	15.5
4764860	24ACC624A**30	CNPH*2417A**	59*N*A080V17**14	23,000	12.7	15.5
4764861	24ACC624A**30	CNPH*2417A**	59*N*A100V21**20	23,200	12.7	15.5

See notes on page 46

COMBINATION RATINGS CONTINUED

AHRI Ref. No.	Model Number	Indoor Model	Furnace Model	Capacity	EER	SEER
4764862	24ACC624A**30	CNPH*2417A**	59*N*A120V24**22	23,200	12.7	15.5
4764863	24ACC624A**30	CNPH*2417A**	59*P5A040E14**10	23,200	12.0	14.5
4764864	24ACC624A**30	CNPH*2417A**	59*P5A060E17**14	23,000	12.7	15.5
4138236	24ACC624A**30	CNPH*2417A**	OVLAAB036098	23,200	13.0	15.5
4138235	24ACC624A**30	CNPH*2417A**	OVMAAB036098	23,200	12.5	15.5
3655776	24ACC624A**30	CNPH*2417A**+TDR		23,000	11.5	14.0
3655777	24ACC624A**30	CNPH*3017A**	58CV(A,X)070–12	23,000	13.0	16.0
3655779	24ACC624A**30	CNPH*3017A**	58CV(A,X)090–16	23,000	13.0	16.0
3655781	24ACC624A**30	CNPH*3017A**	58CV(A,X)110–20	23,000	13.0	16.0
3655783	24ACC624A**30	CNPH*3017A**	58CV(A,X)135–22	23,000	13.0	16.0
3655785	24ACC624A**30	CNPH*3017A**	58CV(A,X)155–22	23,000	13.0	16.0
4138221	24ACC624A**30	CNPH*3017A**	58HDV040––12	23,400	12.5	15.5
4138222	24ACC624A**30	CNPH*3017A**	58HDV060––12	23,800	13.0	15.5
3655787	24ACC624A**30	CNPH*3017A**	58ME(B,C)060–12	23,600	13.0	16.0
3655789	24ACC624A**30	CNPH*3017A**	58ME(B,C)080–12	23,400	13.0	16.0
3655792	24ACC624A**30	CNPH*3017A**	58MEB040–12	23,600	13.0	16.0
3655794	24ACC624A**30	CNPH*3017A**	58MV(B,C)060–14	23,200	13.0	16.0
3655796	24ACC624A**30	CNPH*3017A**	58MV(B,C)080–14	23,000	13.0	16.0
3655798	24ACC624A**30	CNPH*3017A**	58MV(B,C)080–20	22,800	13.0	16.0
3655800	24ACC624A**30	CNPH*3017A**	58MV(B,C)100–20	23,000	13.0	16.0
3655802	24ACC624A**30	CNPH*3017A**	58MV(B,C)120–20	23,200	13.0	16.0
3655804	24ACC624A**30	CNPH*3017A**	58MVB040–14	23,000	13.0	16.0
3655806	24ACC624A**30	CNPH*3017A**	58PH*045–08	23,200	13.0	16.0
3655809	24ACC624A**30	CNPH*3017A**	58VLR105–12	23,200	13.0	16.0
3655811	24ACC624A**30	CNPH*3017A**	58VMR105–12	23,000	13.0	16.0
4764865	24ACC624A**30	CNPH*3017A**	59*N*A060V17**14	23,200	13.0	16.0
4764866	24ACC624A**30	CNPH*3017A**	59*N*A080V17**14	23,000	13.0	16.0
4764867	24ACC624A**30	CNPH*3017A**	59*N*A100V21**20	23,400	13.0	16.0
4764868	24ACC624A**30	CNPH*3017A**	59*N*A120V24**22	23,400	13.0	16.0
4764869	24ACC624A**30	CNPH*3017A**	59*P5A040E14**10	23,400	12.0	14.5
4764870	24ACC624A**30	CNPH*3017A**	59*P5A060E17**14	23,400	13.0	16.0
4138238	24ACC624A**30	CNPH*3017A**	OVLAAB036098	23,400	13.0	16.0
4138237	24ACC624A**30	CNPH*3017A**	OVMAAB036098	23,400	13.0	15.5
3655823	24ACC624A**30	CNPH*3017A**+TDR		23,200	11.5	14.0
3655825	24ACC624A**30	CNPH*3117A**	58CV(A,X)070–12	23,400	13.0	16.0
3655827	24ACC624A**30	CNPH*3117A**	58CV(A,X)090–16	23,400	13.0	16.0
3655829	24ACC624A**30	CNPH*3117A**	58CV(A,X)110–20	23,400	13.0	16.0
3655831	24ACC624A**30	CNPH*3117A**	58CV(A,X)135–22	23,400	13.0	16.0
3655833	24ACC624A**30	CNPH*3117A**	58CV(A,X)155–22	23,400	13.0	16.0
4138223	24ACC624A**30	CNPH*3117A**	58HDV040––12	24,000	13.0	16.0
4138224	24ACC624A**30	CNPH*3117A**	58HDV060––12	24,000	13.0	16.0
3655835	24ACC624A**30	CNPH*3117A**	58ME(B,C)060–12	24,000	13.0	16.0
3655837	24ACC624A**30	CNPH*3117A**	58ME(B,C)080–12	24,000	13.0	16.0
3655840	24ACC624A**30	CNPH*3117A**	58MEB040–12	24,000	13.0	16.0
3655842	24ACC624A**30	CNPH*3117A**	58MV(B,C)060–14	23,800	13.0	16.0
3655844	24ACC624A**30	CNPH*3117A**	58MV(B,C)080–14	23,400	13.0	16.0
3655846	24ACC624A**30	CNPH*3117A**	58MV(B,C)080–20	23,200	13.0	16.0
3655848	24ACC624A**30	CNPH*3117A**	58MV(B,C)100–20	23,400	13.0	16.0
3655850	24ACC624A**30	CNPH*3117A**	58MV(B,C)120–20	23,600	13.0	16.0
3655852	24ACC624A**30	CNPH*3117A**	58MVB040–14	23,400	13.0	16.0
3655854	24ACC624A**30	CNPH*3117A**	58PH*045–08	23,800	13.0	16.0
3655857	24ACC624A**30	CNPH*3117A**	58VLR105–12	23,600	13.0	16.0
3655859	24ACC624A**30	CNPH*3117A**	58VMR105–12	23,400	13.0	16.0
4764871	24ACC624A**30	CNPH*3117A**	59*N*A060V17**14	23,600	13.0	16.0
4764872	24ACC624A**30	CNPH*3117A**	59*N*A080V17**14	23,400	13.0	16.0
4764873	24ACC624A**30	CNPH*3117A**	59*N*A100V21**20	23,800	13.2	16.5
4764874	24ACC624A**30	CNPH*3117A**	59*N*A120V24**22	23,800	13.2	16.5
4764875	24ACC624A**30	CNPH*3117A**	59*P5A040E14**10	24,000	12.5	15.2
4764876	24ACC624A**30	CNPH*3117A**	59*P5A060E17**14	23,800	13.2	16.5
4138240	24ACC624A**30	CNPH*3117A**	OVLAAB036098	23,800	13.0	16.0
4138239	24ACC624A**30	CNPH*3117A**	OVMAAB036098	23,800	13.0	16.0
3655871	24ACC624A**30	CNPH*3117A**+TDR		23,600	12.0	14.5
3655873	24ACC624A**30	CNPH*3617A**	58CV(A,X)070–12	23,000	13.0	16.0
3655876	24ACC624A**30	CNPH*3617A**	58CV(A,X)090–16	23,000	13.0	16.0
3655879	24ACC624A**30	CNPH*3617A**	58CV(A,X)110–20	23,000	13.0	16.0
3655882	24ACC624A**30	CNPH*3617A**	58CV(A,X)135–22	23,000	13.0	16.0
3655885	24ACC624A**30	CNPH*3617A**	58CV(A,X)155–22	23,000	13.0	16.0
3655888	24ACC624A**30	CNPH*3617A**	58ME(B,C)060–12	23,600	13.0	16.0
3655891	24ACC624A**30	CNPH*3617A**	58ME(B,C)080–12	23,400	13.0	16.0
3655897	24ACC624A**30	CNPH*3617A**	58MEB040–12	23,600	13.0	16.0
3655900	24ACC624A**30	CNPH*3617A**	58MV(B,C)060–14	23,200	13.0	16.0
3655903	24ACC624A**30	CNPH*3617A**	58MV(B,C)080–14	23,000	13.0	16.0

See notes on page 46

COMBINATION RATINGS CONTINUED

AHRI Ref. No.	Model Number	Indoor Model	Furnace Model	Capacity	EER	SEER
3655906	24ACC624A**30	CNPH*3617A**	58MV(B,C)080−20	22,800	13.0	16.0
3655909	24ACC624A**30	CNPH*3617A**	58MV(B,C)100−20	23,000	13.0	16.0
3655912	24ACC624A**30	CNPH*3617A**	58MV(B,C)120−20	23,200	13.0	16.0
3655915	24ACC624A**30	CNPH*3617A**	58MVB040−14	23,000	13.0	16.0
3655918	24ACC624A**30	CNPH*3617A**	58PH*045−08	23,200	13.0	16.0
3655925	24ACC624A**30	CNPH*3617A**	58VLR105−12	23,200	13.0	16.0
3655929	24ACC624A**30	CNPH*3617A**	58VMR105−12	23,000	13.0	16.0
3655948	24ACC624A**30	CNPH*3617A**+TDR		23,200	11.5	14.0
3656215	24ACC624A**30	CNPV*1917A**	58CV(A,X)070−12	23,000	13.0	16.0
3656217	24ACC624A**30	CNPV*1917A**	58CV(A,X)090−16	23,000	13.0	16.0
3656219	24ACC624A**30	CNPV*1917A**	58ME(B,C)060−12	23,600	13.0	16.0
3656221	24ACC624A**30	CNPV*1917A**	58MEB040−12	23,600	13.0	16.0
3656223	24ACC624A**30	CNPV*1917A**	58MV(B,C)060−14	23,400	13.0	16.0
3656225	24ACC624A**30	CNPV*1917A**	58PH*045−08	23,200	13.0	16.0
3656229	24ACC624A**30	CNPV*1917A**	58UVB060−14	23,400	13.0	16.0
3656231	24ACC624A**30	CNPV*1917A**+TDR		23,200	11.5	14.0
3656233	24ACC624A**30	CNPV*2414A**	58CV(A,X)070−12	22,800	12.5	15.5
3656235	24ACC624A**30	CNPV*2414A**	58PH*045−08	23,000	12.5	15.5
4764845	24ACC624A**30	CNPV*2414A**	59*P5A040E14**10	23,200	12.0	14.5
3656237	24ACC624A**30	CNPV*2414A**+TDR		23,000	11.5	14.0
3656239	24ACC624A**30	CNPV*2417A**	58CV(A,X)070−12	22,800	12.5	15.5
3656241	24ACC624A**30	CNPV*2417A**	58CV(A,X)090−16	22,800	13.0	16.0
4138215	24ACC624A**30	CNPV*2417A**	58HDV040−−12	23,200	12.5	15.0
3656243	24ACC624A**30	CNPV*2417A**	58ME(B,C)060−12	23,200	13.0	16.0
3656244	24ACC624A**30	CNPV*2417A**	58ME(B,C)080−12	23,000	13.0	16.0
3656246	24ACC624A**30	CNPV*2417A**	58MEB040−12	23,200	13.0	16.0
3656248	24ACC624A**30	CNPV*2417A**	58MV(B,C)060−14	23,000	12.5	15.5
3656250	24ACC624A**30	CNPV*2417A**	58PH*045−08	23,000	12.5	15.5
3656256	24ACC624A**30	CNPV*2417A**	58UVB060−14	23,000	12.5	15.5
3656252	24ACC624A**30	CNPV*2417A**	58VLR105−12	23,000	13.0	16.0
3656254	24ACC624A**30	CNPV*2417A**	58VMR105−12	22,800	12.5	15.5
4764846	24ACC624A**30	CNPV*2417A**	59*N*A060V17**14	23,000	12.7	15.5
4764847	24ACC624A**30	CNPV*2417A**	59*N*A080V17**14	23,000	12.7	15.5
4764848	24ACC624A**30	CNPV*2417A**	59*P5A040E14**10	23,200	12.0	14.5
4764849	24ACC624A**30	CNPV*2417A**	59*P5A060E17**14	23,000	12.7	15.5
4138230	24ACC624A**30	CNPV*2417A**	OVLAAB036098	23,200	13.0	15.5
4138229	24ACC624A**30	CNPV*2417A**	OVMAAB036098	23,200	12.5	15.5
3656258	24ACC624A**30	CNPV*2417A**+TDR		23,000	11.5	14.0
3656259	24ACC624A**30	CNPV*3014A**	58CV(A,X)070−12	23,000	13.0	16.0
3656261	24ACC624A**30	CNPV*3014A**	58PH*045−08	23,200	12.5	15.5
4764850	24ACC624A**30	CNPV*3014A**	59*P5A040E14**10	23,400	12.0	14.5
3656262	24ACC624A**30	CNPV*3014A**+TDR		23,200	11.5	14.0
3656264	24ACC624A**30	CNPV*3017A**	58CV(A,X)070−12	23,000	13.0	16.0
3656266	24ACC624A**30	CNPV*3017A**	58CV(A,X)090−16	23,000	13.0	16.0
4138216	24ACC624A**30	CNPV*3017A**	58HDV040−−12	23,400	12.5	15.5
4138217	24ACC624A**30	CNPV*3017A**	58HDV060−−12	23,800	13.0	15.5
3656268	24ACC624A**30	CNPV*3017A**	58ME(B,C)060−12	23,600	13.0	16.0
3656270	24ACC624A**30	CNPV*3017A**	58ME(B,C)080−12	23,400	13.0	16.0
3656273	24ACC624A**30	CNPV*3017A**	58MEB040−12	23,600	13.0	16.0
3656275	24ACC624A**30	CNPV*3017A**	58MV(B,C)060−14	23,200	13.0	16.0
3656277	24ACC624A**30	CNPV*3017A**	58PH*045−08	23,200	13.0	16.0
3656283	24ACC624A**30	CNPV*3017A**	58UVB060−14	23,200	13.0	16.0
3656279	24ACC624A**30	CNPV*3017A**	58VLR105−12	23,200	13.0	16.0
3656281	24ACC624A**30	CNPV*3017A**	58VMR105−12	23,000	13.0	16.0
4764851	24ACC624A**30	CNPV*3017A**	59*N*A060V17**14	23,200	13.0	16.0
4764852	24ACC624A**30	CNPV*3017A**	59*N*A080V17**14	23,000	13.0	16.0
4764853	24ACC624A**30	CNPV*3017A**	59*P5A040E14**10	23,400	12.0	14.5
4764854	24ACC624A**30	CNPV*3017A**	59*P5A060E17**14	23,400	13.0	16.0
4138232	24ACC624A**30	CNPV*3017A**	OVLAAB036098	23,400	13.0	16.0
4138231	24ACC624A**30	CNPV*3017A**	OVMAAB036098	23,400	13.0	15.5
3656285	24ACC624A**30	CNPV*3017A**+TDR		23,200	11.5	14.0
3656287	24ACC624A**30	CNPV*3117A**	58CV(A,X)070−12	23,400	13.0	16.0
3656289	24ACC624A**30	CNPV*3117A**	58CV(A,X)090−16	23,400	13.0	16.0
4138218	24ACC624A**30	CNPV*3117A**	58HDV040−−12	24,000	13.0	16.0
4138219	24ACC624A**30	CNPV*3117A**	58HDV060−−12	24,000	13.0	16.0
3656291	24ACC624A**30	CNPV*3117A**	58ME(B,C)060−12	24,000	13.0	16.0
3656293	24ACC624A**30	CNPV*3117A**	58ME(B,C)080−12	24,000	13.0	16.0
3656296	24ACC624A**30	CNPV*3117A**	58MEB040−12	24,000	13.0	16.0
3656298	24ACC624A**30	CNPV*3117A**	58MV(B,C)060−14	23,800	13.0	16.0
3656300	24ACC624A**30	CNPV*3117A**	58PH*045−08	23,800	13.0	16.0
3656306	24ACC624A**30	CNPV*3117A**	58UVB060−14	23,800	13.0	16.0
3656302	24ACC624A**30	CNPV*3117A**	58VLR105−12	23,600	13.0	16.0

See notes on page 46

COMBINATION RATINGS CONTINUED

AHRI Ref. No.	Model Number	Indoor Model	Furnace Model	Capacity	EER	SEER
3656304	24ACC624A**30	CNPV*3117A**	58VMR105−12	23,400	13.0	16.0
4764855	24ACC624A**30	CNPV*3117A**	59*N*A060V17**14	23,600	13.0	16.0
4764856	24ACC624A**30	CNPV*3117A**	59*N*A080V17**14	23,400	13.0	16.0
4764857	24ACC624A**30	CNPV*3117A**	59*P5A040E14**10	24,000	12.5	15.0
4764858	24ACC624A**30	CNPV*3117A**	59*P5A060E17**14	23,800	13.2	16.5
4138234	24ACC624A**30	CNPV*3117A**	OVLAAB036098	23,800	13.0	16.0
4138233	24ACC624A**30	CNPV*3117A**	OVMAAB036098	23,800	13.0	16.0
3656310	24ACC624A**30	CNPV*3617A**	58CV(A,X)070−12	23,000	13.0	16.0
3656313	24ACC624A**30	CNPV*3617A**	58CV(A,X)090−16	23,000	13.0	16.0
3656316	24ACC624A**30	CNPV*3617A**	58ME(B,C)060−12	23,600	13.0	16.0
3656319	24ACC624A**30	CNPV*3617A**	58ME(B,C)080−12	23,400	13.0	16.0
3656324	24ACC624A**30	CNPV*3617A**	58MEB040−12	23,600	13.0	16.0
3656327	24ACC624A**30	CNPV*3617A**	58MV(B,C)060−14	23,200	13.0	16.0
3656330	24ACC624A**30	CNPV*3617A**	58PH*045−08	23,200	13.0	16.0
3656340	24ACC624A**30	CNPV*3617A**	58UVB060−14	23,200	13.0	16.0
3656334	24ACC624A**30	CNPV*3617A**	58VLR105−12	23,200	13.0	16.0
3656337	24ACC624A**30	CNPV*3617A**	58VMR105−12	23,000	13.0	16.0
3656343	24ACC624A**30	CNPV*3617A**+TDR		23,200	11.5	14.0
3656346	24ACC624A**30	CNPV*3621A**	58CV(A,X)090−16	23,000	13.0	16.0
3656349	24ACC624A**30	CNPV*3621A**	58CV(A,X)110−20	23,000	13.0	16.0
3656352	24ACC624A**30	CNPV*3621A**	58ME(B,C)060−12	23,600	13.0	16.0
3656355	24ACC624A**30	CNPV*3621A**	58ME(B,C)080−12	23,400	13.0	16.0
3656361	24ACC624A**30	CNPV*3621A**	58MEB040−12	23,600	13.0	16.0
3656364	24ACC624A**30	CNPV*3621A**	58MV(B,C)060−14	23,200	13.0	16.0
3656367	24ACC624A**30	CNPV*3621A**	58MV(B,C)080−14	23,000	13.0	16.0
3656370	24ACC624A**30	CNPV*3621A**	58MV(B,C)080−20	22,800	13.0	16.0
3656373	24ACC624A**30	CNPV*3621A**	58MV(B,C)100−20	23,000	13.0	16.0
3656389	24ACC624A**30	CNPV*3621A**	58UVB060−14	23,200	13.0	16.0
3656392	24ACC624A**30	CNPV*3621A**	58UVB080−14	23,000	13.0	16.0
3656395	24ACC624A**30	CNPV*3621A**	58UVB080−20	22,800	13.0	16.0
3656398	24ACC624A**30	CNPV*3621A**	58UVB100−20	23,000	13.0	16.0
3656381	24ACC624A**30	CNPV*3621A**	58VLR105−12	23,200	13.0	16.0
3656385	24ACC624A**30	CNPV*3621A**	58VMR105−12	23,000	13.0	16.0
3656401	24ACC624A**30	CNPV*3621A**+TDR		23,200	11.5	14.0
3656704	24ACC624A**30	CSPH*2412A**	58HDV040−−12	23,200	12.8	15.2
3656706	24ACC624A**30	CSPH*2412A**	58HDV060−−12	23,200	12.8	15.2
3656714	24ACC624A**30	CSPH*2412A**	58VLR105−12	23,400	13.0	16.0
3656716	24ACC624A**30	CSPH*2412A**	58VMR105−12	23,000	12.5	15.5
4764877	24ACC624A**30	CSPH*2412A**	59*N*A060V17**14	23,200	12.7	15.5
4764878	24ACC624A**30	CSPH*2412A**	59*N*A080V17**14	23,200	13.0	16.0
4764879	24ACC624A**30	CSPH*2412A**	59*N*A100V21**20	23,600	13.0	16.0
4764880	24ACC624A**30	CSPH*2412A**	59*N*A120V24**22	23,400	13.0	16.0
4764881	24ACC624A**30	CSPH*2412A**	59*P5A040E14**10	23,400	12.0	14.5
4764882	24ACC624A**30	CSPH*2412A**	59*P5A060E17**14	23,000	12.7	15.5
4138242	24ACC624A**30	CSPH*2412A**	OVLAAB036098	23,400	13.0	15.5
4138241	24ACC624A**30	CSPH*2412A**	OVMAAB036098	23,400	13.0	15.5
3656720	24ACC624A**30	CSPH*2412A**+TDR		23,200	11.5	14.0
3656721	24ACC624A**30	CSPH*3012A**	58CV(A,X)070−12	23,000	13.0	16.0
3656723	24ACC624A**30	CSPH*3012A**	58CV(A,X)090−16	23,200	13.0	16.0
3656725	24ACC624A**30	CSPH*3012A**	58CV(A,X)110−20	23,200	13.0	16.0
3656727	24ACC624A**30	CSPH*3012A**	58CV(A,X)135−22	23,200	13.0	16.0
3656729	24ACC624A**30	CSPH*3012A**	58CV(A,X)155−22	23,200	13.0	16.0
3656733	24ACC624A**30	CSPH*3012A**	58ME(B,C)060−12	23,600	13.0	16.0
3656735	24ACC624A**30	CSPH*3012A**	58ME(B,C)080−12	23,400	13.0	16.0
3656738	24ACC624A**30	CSPH*3012A**	58MEB040−12	23,600	13.0	16.0
3656740	24ACC624A**30	CSPH*3012A**	58MV(B,C)060−14	23,400	13.0	16.0
3656742	24ACC624A**30	CSPH*3012A**	58MV(B,C)080−14	23,000	13.0	16.0
3656744	24ACC624A**30	CSPH*3012A**	58MV(B,C)080−20	22,800	13.0	16.0
3656746	24ACC624A**30	CSPH*3012A**	58MV(B,C)100−20	23,000	13.0	16.0
3656748	24ACC624A**30	CSPH*3012A**	58MV(B,C)120−20	23,200	13.0	16.0
3656750	24ACC624A**30	CSPH*3012A**	58MVB040−14	23,000	13.0	16.0
3656752	24ACC624A**30	CSPH*3012A**	58PH*045−08	23,200	13.0	16.0
3656755	24ACC624A**30	CSPH*3012A**	58VLR105−12	23,400	13.0	16.0
3656757	24ACC624A**30	CSPH*3012A**	58VMR105−12	23,000	13.0	16.0
4764883	24ACC624A**30	CSPH*3012A**	59*N*A060V17**14	23,400	13.0	16.0
4764884	24ACC624A**30	CSPH*3012A**	59*N*A080V17**14	23,200	13.0	16.0
4764885	24ACC624A**30	CSPH*3012A**	59*N*A100V21**20	23,600	13.0	16.0
4764886	24ACC624A**30	CSPH*3012A**	59*N*A120V24**22	23,600	13.0	16.0
4764887	24ACC624A**30	CSPH*3012A**	59*P5A040E14**10	23,600	12.0	14.5
4764888	24ACC624A**30	CSPH*3012A**	59*P5A060E17**14	23,400	13.0	16.0
4138244	24ACC624A**30	CSPH*3012A**	OVLAAB036098	23,600	13.0	15.5
4138243	24ACC624A**30	CSPH*3012A**	OVMAAB036098	23,400	13.0	15.5

See notes on page 46

COMBINATION RATINGS CONTINUED

AHRI Ref. No.	Model Number	Indoor Model	Furnace Model	Capacity	EER	SEER
3656769	24ACC624A**30	CSPH*3012A**+TDR		23,200	11.5	14.0
3656771	24ACC624A**30	CSPH*3612A**	58CV(A,X)070−12	23,400	13.0	16.0
3656774	24ACC624A**30	CSPH*3612A**	58CV(A,X)090−16	23,400	13.0	16.0
3656777	24ACC624A**30	CSPH*3612A**	58CV(A,X)110−20	23,400	13.0	16.0
3656780	24ACC624A**30	CSPH*3612A**	58CV(A,X)135−22	23,400	13.0	16.0
3656783	24ACC624A**30	CSPH*3612A**	58CV(A,X)155−22	23,400	13.0	16.0
3656792	24ACC624A**30	CSPH*3612A**	58ME(B,C)060−12	24,000	13.0	16.0
3656795	24ACC624A**30	CSPH*3612A**	58ME(B,C)080−12	23,800	13.0	16.0
3656801	24ACC624A**30	CSPH*3612A**	58MEB040−12	24,000	13.0	16.0
3656804	24ACC624A**30	CSPH*3612A**	58MV(B,C)060−14	23,800	13.0	16.0
3656807	24ACC624A**30	CSPH*3612A**	58MV(B,C)080−14	23,400	13.0	16.0
3656810	24ACC624A**30	CSPH*3612A**	58MV(B,C)080−20	23,200	13.0	16.0
3656813	24ACC624A**30	CSPH*3612A**	58MV(B,C)100−20	23,400	13.0	16.0
3656816	24ACC624A**30	CSPH*3612A**	58MV(B,C)120−20	23,600	13.0	16.0
3656819	24ACC624A**30	CSPH*3612A**	58MVB040−14	23,400	13.0	16.0
3656822	24ACC624A**30	CSPH*3612A**	58PH*045−08	23,600	13.0	16.0
3656829	24ACC624A**30	CSPH*3612A**	58VLR105−12	23,600	13.0	16.0
3656833	24ACC624A**30	CSPH*3612A**	58VMR105−12	23,400	13.0	16.0
3656852	24ACC624A**30	CSPH*3612A**+TDR		23,600	11.5	14.0
3804420	24ACC624A**30	FB4CNF024		22,800	12.0	14.0
3693324	24ACC624A**30	FB4CNF024+TXV		22,800	12.0	15.0
3804421	24ACC624A**30	FB4CNF030		23,400	12.5	15.0
3693325	24ACC624A**30	FB4CNF030+TXV		23,400	13.0	16.0
3657077	24ACC624A**30	FE4AN(B,F)003+UI		23,200	13.0	16.0
3657089	24ACC624A**30	FE4ANF002+UI		23,200	13.0	16.0
3657098	24ACC624A**30	FF1ENP024		22,800	11.5	13.5
3657100	24ACC624A**30	FF1ENP025		23,200	12.5	15.0
3657101	24ACC624A**30	FF1ENP030		22,800	11.5	13.5
3657103	24ACC624A**30	FF1ENP031		23,200	12.5	15.0
3657105	24ACC624A**30	FF1ENP036		23,000	11.0	13.5
3657108	24ACC624A**30	FF1ENP037		23,400	12.5	15.5
3657126	24ACC624A**30	FV4CN(B,F)003		23,200	13.0	16.0
3657138	24ACC624A**30	FV4CNF002		23,200	13.0	16.0
3657157	24ACC624A**30	FX4DN(B,F)031		23,600	12.5	15.5
3657169	24ACC624A**30	FX4DNF025		23,400	13.0	16.0
3804422	24ACC624A**30	FY5BNF024		23,200	12.0	14.0
3693326	24ACC624A**30	FY5BNF024+TXV		23,200	12.0	15.0
3804423	24ACC624A**30	FY5BNF030		23,400	12.0	14.0
3693327	24ACC624A**30	FY5BNF030+TXV		23,400	12.0	15.0
3656309	24ACC630A**30	†CNPV*3117A**+TDR		28,600	12.0	14.5
3655258	24ACC630A**30	CAP**3014A**	58CV(A,X)070−12	27,600	13.0	15.2
3655261	24ACC630A**30	CAP**3014A**+TDR		28,000	12.0	14.0
3655263	24ACC630A**30	CAP**3017A**	58CV(A,X)070−12	27,800	12.5	15.5
3655265	24ACC630A**30	CAP**3017A**	58CV(A,X)090−16	27,800	13.0	16.0
3655267	24ACC630A**30	CAP**3017A**	58ME(B,C)060−12	28,200	13.0	15.5
3655269	24ACC630A**30	CAP**3017A**	58ME(B,C)080−12	28,000	13.0	16.0
3655270	24ACC630A**30	CAP**3017A**	58ME(B,C)080−16	28,200	13.0	15.5
3655272	24ACC630A**30	CAP**3017A**	58MEB040−12	28,200	13.0	16.0
3655274	24ACC630A**30	CAP**3017A**	58MV(B,C)060−14	28,000	13.0	15.5
3655276	24ACC630A**30	CAP**3017A**	58PH*070−16	28,000	12.5	15.0
3655282	24ACC630A**30	CAP**3017A**	58UVB060−14	28,000	13.0	15.5
3655278	24ACC630A**30	CAP**3017A**	58VLR105−12	27,800	13.0	15.5
3655280	24ACC630A**30	CAP**3017A**	58VMR105−12	27,400	13.0	15.5
4764889	24ACC630A**30	CAP**3017A**	59*N*A060V17**14	27,600	12.7	15.5
4764890	24ACC630A**30	CAP**3017A**	59*N*A080V17**14	27,800	12.7	15.5
4764891	24ACC630A**30	CAP**3017A**	59*P5A060E17**14	27,800	12.7	15.5
4764892	24ACC630A**30	CAP**3017A**	59*P5A080E17**16	28,000	12.7	15.5
4138262	24ACC630A**30	CAP**3017A**	OVLAAB036098	27,600	12.5	15.5
4138261	24ACC630A**30	CAP**3017A**	OVMAAB036098	27,800	12.5	15.0
3655284	24ACC630A**30	CAP**3017A**+TDR		28,000	12.0	14.0
3655286	24ACC630A**30	CAP**3614A**	58CV(A,X)070−12	27,800	12.5	15.5
3655291	24ACC630A**30	CAP**3614A**+TDR		28,000	12.0	14.0
3655294	24ACC630A**30	CAP**3617A**	58CV(A,X)070−12	27,800	12.5	15.5
3655297	24ACC630A**30	CAP**3617A**	58CV(A,X)090−16	27,800	13.0	16.0
3655300	24ACC630A**30	CAP**3617A**	58ME(B,C)060−12	28,200	13.0	16.0
3655303	24ACC630A**30	CAP**3617A**	58ME(B,C)080−12	28,200	13.0	16.0
3655305	24ACC630A**30	CAP**3617A**	58ME(B,C)080−16	28,400	13.0	16.0
3655308	24ACC630A**30	CAP**3617A**	58MEB040−12	28,200	13.0	16.0
3655311	24ACC630A**30	CAP**3617A**	58MV(B,C)060−14	28,000	13.0	16.0
3655315	24ACC630A**30	CAP**3617A**	58PH*070−16	28,000	12.5	15.2
3655324	24ACC630A**30	CAP**3617A**	58UVB060−14	28,000	13.0	16.0

See notes on page 46

COMBINATION RATINGS CONTINUED

AHRI Ref. No.	Model Number	Indoor Model	Furnace Model	Capacity	EER	SEER
3655318	24ACC630A**30	CAP**3617A**	58VLR105−12	27,800	13.0	15.5
3655321	24ACC630A**30	CAP**3617A**	58VMR105−12	27,600	13.0	15.5
4764893	24ACC630A**30	CAP**3617A**	59*N*A060V17**14	27,600	12.7	15.5
4764894	24ACC630A**30	CAP**3617A**	59*N*A080V17**14	27,800	12.7	15.5
4764895	24ACC630A**30	CAP**3617A**	59*P5A060E17**14	28,000	12.7	15.5
4764896	24ACC630A**30	CAP**3617A**	59*P5A080E17**16	28,200	12.7	15.5
4138264	24ACC630A**30	CAP**3617A**	OVLAAB036098	27,800	13.0	15.5
4138263	24ACC630A**30	CAP**3617A**	OVMAAB036098	27,800	12.5	15.0
3655327	24ACC630A**30	CAP**3617A**+TDR		28,000	12.0	14.0
3655330	24ACC630A**30	CAP**3619A**	58HDV040−−12	28,000	12.5	15.0
3655333	24ACC630A**30	CAP**3619A**	58HDV060−−12	28,200	12.5	15.2
4764902	24ACC630A**30	CAP**3619A**	59*N*A060V17**14	27,600	12.7	15.5
4764903	24ACC630A**30	CAP**3619A**	59*N*A080V17**14	27,800	12.7	15.5
4764904	24ACC630A**30	CAP**3619A**	59*N*A100V21**20	28,000	12.7	15.5
4764905	24ACC630A**30	CAP**3619A**	59*P5A060E17**14	28,000	12.7	15.5
4764906	24ACC630A**30	CAP**3619A**	59*P5A080E17**16	28,200	12.7	15.5
4138268	24ACC630A**30	CAP**3619A**	OVLAAB036098	27,800	13.0	15.5
4138267	24ACC630A**30	CAP**3619A**	OVMAAB036098	27,800	12.5	15.0
3655336	24ACC630A**30	CAP**3619A**+TDR		28,000	11.5	14.0
3655339	24ACC630A**30	CAP**3621A**	58CV(A,X)090−16	27,800	13.0	16.0
3655342	24ACC630A**30	CAP**3621A**	58CV(A,X)110−20	27,800	13.0	16.0
3655345	24ACC630A**30	CAP**3621A**	58ME(B,C)060−12	28,200	13.0	16.0
3655348	24ACC630A**30	CAP**3621A**	58ME(B,C)080−12	28,200	13.0	16.0
3655350	24ACC630A**30	CAP**3621A**	58ME(B,C)080−16	28,400	13.0	16.0
3655354	24ACC630A**30	CAP**3621A**	58MEB040−12	28,200	13.0	16.0
3655357	24ACC630A**30	CAP**3621A**	58MV(B,C)060−14	28,200	13.0	16.0
3655360	24ACC630A**30	CAP**3621A**	58MV(B,C)080−14	27,600	13.0	16.0
3655363	24ACC630A**30	CAP**3621A**	58MV(B,C)080−20	27,800	13.0	16.0
3655366	24ACC630A**30	CAP**3621A**	58MV(B,C)100−20	27,600	13.0	15.5
3655368	24ACC630A**30	CAP**3621A**	58PH*070−16	28,000	13.0	15.2
3655370	24ACC630A**30	CAP**3621A**	58PH*090−16	28,200	13.0	16.0
3655382	24ACC630A**30	CAP**3621A**	58UVB060−14	28,200	13.0	16.0
3655385	24ACC630A**30	CAP**3621A**	58UVB080−14	27,600	13.0	16.0
3655388	24ACC630A**30	CAP**3621A**	58UVB080−20	27,800	13.0	16.0
3655391	24ACC630A**30	CAP**3621A**	58UVB100−20	27,600	13.0	15.5
3655374	24ACC630A**30	CAP**3621A**	58VLR105−12	28,000	13.0	15.5
3655378	24ACC630A**30	CAP**3621A**	58VMR105−12	27,600	13.0	15.5
4764897	24ACC630A**30	CAP**3621A**	59*N*A060V17**14	27,800	12.7	15.5
4764898	24ACC630A**30	CAP**3621A**	59*N*A080V17**14	27,800	12.7	15.5
4764899	24ACC630A**30	CAP**3621A**	59*N*A100V21**20	28,000	13.0	16.0
4764900	24ACC630A**30	CAP**3621A**	59*P5A060E17**14	28,000	12.7	15.5
4764901	24ACC630A**30	CAP**3621A**	59*P5A080E17**16	28,200	12.7	15.5
4138266	24ACC630A**30	CAP**3621A**	OVLAAB036098	27,800	13.0	15.5
4138265	24ACC630A**30	CAP**3621A**	OVMAAB036098	27,800	13.0	15.5
3655394	24ACC630A**30	CAP**3621A**+TDR		28,000	12.0	14.0
3655396	24ACC630A**30	CAP**4221A**	58CV(A,X)090−16	28,000	13.0	16.0
3655399	24ACC630A**30	CAP**4221A**	58CV(A,X)110−20	28,000	13.0	16.0
3655402	24ACC630A**30	CAP**4221A**	58ME(B,C)060−12	28,600	13.0	16.0
3655405	24ACC630A**30	CAP**4221A**	58ME(B,C)080−12	28,400	13.0	16.0
3655408	24ACC630A**30	CAP**4221A**	58ME(B,C)080−16	28,600	13.0	16.0
3655413	24ACC630A**30	CAP**4221A**	58MEB040−12	28,400	13.0	16.0
3655416	24ACC630A**30	CAP**4221A**	58MV(B,C)060−14	28,200	13.0	16.0
3655419	24ACC630A**30	CAP**4221A**	58MV(B,C)080−14	28,000	13.0	16.0
3655422	24ACC630A**30	CAP**4221A**	58MV(B,C)080−20	28,000	13.0	16.0
3655425	24ACC630A**30	CAP**4221A**	58MV(B,C)100−20	27,800	13.0	16.0
3655428	24ACC630A**30	CAP**4221A**	58PH*070−16	28,200	12.5	15.5
3655431	24ACC630A**30	CAP**4221A**	58PH*090−16	28,400	13.0	16.0
3655444	24ACC630A**30	CAP**4221A**	58UVB060−14	28,200	13.0	16.0
3655447	24ACC630A**30	CAP**4221A**	58UVB080−14	28,000	13.0	16.0
3655450	24ACC630A**30	CAP**4221A**	58UVB080−20	28,000	13.0	16.0
3655453	24ACC630A**30	CAP**4221A**	58UVB100−20	27,800	13.0	16.0
3655436	24ACC630A**30	CAP**4221A**	58VLR105−12	28,000	13.0	16.0
3655440	24ACC630A**30	CAP**4221A**	58VMR105−12	27,800	13.0	16.0
3655456	24ACC630A**30	CAP**4221A**+TDR		28,200	11.5	14.0
3655459	24ACC630A**30	CAP**4224A**	58CV(A,X)110−20	28,200	13.0	16.0
3655462	24ACC630A**30	CAP**4224A**	58CV(A,X)135−22	28,200	13.0	16.0
3655465	24ACC630A**30	CAP**4224A**	58CV(A,X)155−22	28,200	13.0	16.0
3655471	24ACC630A**30	CAP**4224A**	58MV(B,C)080−14	28,000	13.0	16.0
3655474	24ACC630A**30	CAP**4224A**	58MV(B,C)080−20	28,000	13.0	16.0
3655477	24ACC630A**30	CAP**4224A**	58MV(B,C)100−20	27,800	13.0	16.0
3655480	24ACC630A**30	CAP**4224A**	58MV(B,C)120−20	28,000	13.0	16.0
3655483	24ACC630A**30	CAP**4224A**	58MVB040−14	28,000	13.0	16.0

See notes on page 46

COMBINATION RATINGS CONTINUED

AHRI Ref. No.	Model Number	Indoor Model	Furnace Model	Capacity	EER	SEER
3655486	24ACC630A**30	CAP**4224A**	58PH*090−16	28,400	13.0	16.0
3655496	24ACC630A**30	CAP**4224A**	58UVB080−14	28,000	13.0	16.0
3655499	24ACC630A**30	CAP**4224A**	58UVB080−20	28,000	13.0	16.0
3655502	24ACC630A**30	CAP**4224A**	58UVB100−20	27,800	13.0	16.0
3655505	24ACC630A**30	CAP**4224A**	58UVB120−20	28,000	13.0	16.0
3655508	24ACC630A**30	CAP**4224A**+TDR		28,200	11.5	14.0
3655778	24ACC630A**30	CNPH*3017A**	58CV(A,X)070−12	27,800	12.5	15.5
3655780	24ACC630A**30	CNPH*3017A**	58CV(A,X)090−16	27,800	13.0	15.5
3655782	24ACC630A**30	CNPH*3017A**	58CV(A,X)110−20	27,800	13.0	15.5
3655784	24ACC630A**30	CNPH*3017A**	58CV(A,X)135−22	27,800	13.0	16.0
3655786	24ACC630A**30	CNPH*3017A**	58CV(A,X)155−22	27,800	13.0	16.0
4138255	24ACC630A**30	CNPH*3017A**	58HDV040−−12	27,600	12.5	15.0
4138256	24ACC630A**30	CNPH*3017A**	58HDV060−−12	27,800	12.5	15.0
3655788	24ACC630A**30	CNPH*3017A**	58ME(B,C)060−12	28,200	13.0	15.5
3655790	24ACC630A**30	CNPH*3017A**	58ME(B,C)080−12	28,000	13.0	16.0
3655791	24ACC630A**30	CNPH*3017A**	58ME(B,C)080−16	28,200	13.0	15.5
3655793	24ACC630A**30	CNPH*3017A**	58MEB040−12	28,200	13.0	16.0
3655795	24ACC630A**30	CNPH*3017A**	58MV(B,C)060−14	28,000	13.0	15.5
3655797	24ACC630A**30	CNPH*3017A**	58MV(B,C)080−14	27,600	12.5	15.5
3655799	24ACC630A**30	CNPH*3017A**	58MV(B,C)080−20	27,800	12.5	15.5
3655801	24ACC630A**30	CNPH*3017A**	58MV(B,C)100−20	27,600	12.5	15.5
3655803	24ACC630A**30	CNPH*3017A**	58MV(B,C)120−20	27,800	13.0	16.0
3655805	24ACC630A**30	CNPH*3017A**	58MVB040−14	27,800	12.5	15.5
3655807	24ACC630A**30	CNPH*3017A**	58PH*070−16	28,000	12.5	15.0
3655808	24ACC630A**30	CNPH*3017A**	58PH*090−16	28,000	12.5	15.5
3655810	24ACC630A**30	CNPH*3017A**	58VLR105−12	27,800	13.0	15.5
3655812	24ACC630A**30	CNPH*3017A**	58VMR105−12	27,400	13.0	15.5
4764928	24ACC630A**30	CNPH*3017A**	59*N*A060V17**14	27,600	12.7	15.5
4764929	24ACC630A**30	CNPH*3017A**	59*N*A080V17**14	27,800	12.7	15.5
4764930	24ACC630A**30	CNPH*3017A**	59*N*A100V21**20	28,000	12.7	15.5
4764931	24ACC630A**30	CNPH*3017A**	59*N*A120V24**22	27,800	13.0	16.0
4764932	24ACC630A**30	CNPH*3017A**	59*P5A060E17**14	27,800	12.7	15.5
4764933	24ACC630A**30	CNPH*3017A**	59*P5A080E17**16	28,000	12.7	15.5
4138280	24ACC630A**30	CNPH*3017A**	OVLAAB036098	27,800	12.5	15.0
4138279	24ACC630A**30	CNPH*3017A**	OVMAAB036098	27,800	12.5	15.0
3655824	24ACC630A**30	CNPH*3017A**+TDR		28,000	12.0	14.0
3655826	24ACC630A**30	CNPH*3117A**	58CV(A,X)070−12	28,400	13.0	16.0
3655828	24ACC630A**30	CNPH*3117A**	58CV(A,X)090−16	28,400	13.0	16.0
3655830	24ACC630A**30	CNPH*3117A**	58CV(A,X)110−20	28,400	13.0	16.0
3655832	24ACC630A**30	CNPH*3117A**	58CV(A,X)135−22	28,400	13.0	16.0
3655834	24ACC630A**30	CNPH*3117A**	58CV(A,X)155−22	28,400	13.0	16.0
4138257	24ACC630A**30	CNPH*3117A**	58HDV040−−12	28,400	13.0	15.0
4138258	24ACC630A**30	CNPH*3117A**	58HDV060−−12	28,600	13.0	15.5
3655836	24ACC630A**30	CNPH*3117A**	58ME(B,C)060−12	28,800	13.0	16.0
3655838	24ACC630A**30	CNPH*3117A**	58ME(B,C)080−12	28,800	13.0	16.0
3655839	24ACC630A**30	CNPH*3117A**	58ME(B,C)080−16	29,000	13.0	16.0
3655841	24ACC630A**30	CNPH*3117A**	58MEB040−12	28,800	13.0	16.0
3655843	24ACC630A**30	CNPH*3117A**	58MV(B,C)060−14	28,600	13.0	16.0
3655845	24ACC630A**30	CNPH*3117A**	58MV(B,C)080−14	28,200	13.0	16.0
3655847	24ACC630A**30	CNPH*3117A**	58MV(B,C)080−20	28,400	13.0	16.0
3655849	24ACC630A**30	CNPH*3117A**	58MV(B,C)100−20	28,200	13.0	16.0
3655851	24ACC630A**30	CNPH*3117A**	58MV(B,C)120−20	28,400	13.0	16.0
3655853	24ACC630A**30	CNPH*3117A**	58MVB040−14	28,400	13.0	16.0
3655855	24ACC630A**30	CNPH*3117A**	58PH*070−16	28,600	13.0	16.0
3655856	24ACC630A**30	CNPH*3117A**	58PH*090−16	28,600	13.0	16.0
3655858	24ACC630A**30	CNPH*3117A**	58VLR105−12	28,400	13.0	16.0
3655860	24ACC630A**30	CNPH*3117A**	58VMR105−12	28,000	13.0	16.0
4764934	24ACC630A**30	CNPH*3117A**	59*N*A060V17**14	28,200	12.7	15.5
4764935	24ACC630A**30	CNPH*3117A**	59*N*A080V17**14	28,400	13.0	16.0
4764936	24ACC630A**30	CNPH*3117A**	59*N*A100V21**20	28,600	13.0	16.0
4764937	24ACC630A**30	CNPH*3117A**	59*N*A120V24**22	28,400	13.0	16.0
4764938	24ACC630A**30	CNPH*3117A**	59*P5A060E17**14	28,400	13.0	16.0
4764939	24ACC630A**30	CNPH*3117A**	59*P5A080E17**16	28,800	13.0	16.0
4138282	24ACC630A**30	CNPH*3117A**	OVLAAB036098	28,400	13.0	15.5
4138281	24ACC630A**30	CNPH*3117A**	OVMAAB036098	28,400	13.0	15.5
3655872	24ACC630A**30	CNPH*3117A**+TDR		28,600	12.0	14.5
3655874	24ACC630A**30	CNPH*3617A**	58CV(A,X)070−12	27,800	12.5	15.5
3655877	24ACC630A**30	CNPH*3617A**	58CV(A,X)090−16	27,800	13.0	15.5
3655880	24ACC630A**30	CNPH*3617A**	58CV(A,X)110−20	27,800	13.0	15.5
3655883	24ACC630A**30	CNPH*3617A**	58CV(A,X)135−22	27,800	13.0	16.0
3655886	24ACC630A**30	CNPH*3617A**	58CV(A,X)155−22	27,800	13.0	16.0
4138259	24ACC630A**30	CNPH*3617A**	58HDV040−−12	27,600	12.5	15.0

See notes on page 46

COMBINATION RATINGS CONTINUED

AHRI Ref. No.	Model Number	Indoor Model	Furnace Model	Capacity	EER	SEER
4138260	24ACC630A**30	CNPH*3617A**	58HDV060−−12	27,800	12.5	15.0
3655889	24ACC630A**30	CNPH*3617A**	58ME(B,C)060−12	28,200	13.0	15.5
3655892	24ACC630A**30	CNPH*3617A**	58ME(B,C)080−12	28,000	13.0	16.0
3655894	24ACC630A**30	CNPH*3617A**	58ME(B,C)080−16	28,200	13.0	15.5
3655898	24ACC630A**30	CNPH*3617A**	58MEB040−12	28,200	13.0	16.0
3655901	24ACC630A**30	CNPH*3617A**	58MV(B,C)060−14	28,000	13.0	15.5
3655904	24ACC630A**30	CNPH*3617A**	58MV(B,C)080−14	27,600	12.5	15.5
3655907	24ACC630A**30	CNPH*3617A**	58MV(B,C)080−20	27,800	12.5	15.5
3655910	24ACC630A**30	CNPH*3617A**	58MV(B,C)100−20	27,600	12.5	15.5
3655913	24ACC630A**30	CNPH*3617A**	58MV(B,C)120−20	27,800	13.0	16.0
3655916	24ACC630A**30	CNPH*3617A**	58MVB040−14	27,800	12.5	15.5
3655920	24ACC630A**30	CNPH*3617A**	58PH*070−16	28,000	12.5	15.0
3655922	24ACC630A**30	CNPH*3617A**	58PH*090−16	28,000	12.5	15.5
3655926	24ACC630A**30	CNPH*3617A**	58VLR105−12	27,800	13.0	15.5
3655930	24ACC630A**30	CNPH*3617A**	58VMR105−12	27,400	13.0	15.5
4764940	24ACC630A**30	CNPH*3617A**	59*N*A060V17**14	27,600	12.7	15.5
4764941	24ACC630A**30	CNPH*3617A**	59*N*A080V17**14	27,800	12.7	15.5
4764942	24ACC630A**30	CNPH*3617A**	59*N*A100V21**20	28,000	12.7	15.5
4764943	24ACC630A**30	CNPH*3617A**	59*N*A120V24**22	27,800	13.0	16.0
4764944	24ACC630A**30	CNPH*3617A**	59*P5A060E17**14	27,800	12.7	15.5
4764945	24ACC630A**30	CNPH*3617A**	59*P5A080E17**16	28,000	12.7	15.5
4138284	24ACC630A**30	CNPH*3617A**	OVLAAB036098	27,800	12.5	15.0
4138283	24ACC630A**30	CNPH*3617A**	OVMAAB036098	27,800	12.5	15.0
3655949	24ACC630A**30	CNPH*3617A**+TDR		28,000	12.0	14.0
3655951	24ACC630A**30	CNPH*4221A**	58CV(A,X)070−12	28,000	13.0	15.5
3655954	24ACC630A**30	CNPH*4221A**	58CV(A,X)090−16	28,000	13.0	16.0
3655957	24ACC630A**30	CNPH*4221A**	58CV(A,X)110−20	28,200	13.0	16.0
3655960	24ACC630A**30	CNPH*4221A**	58CV(A,X)135−22	28,200	13.0	16.0
3655963	24ACC630A**30	CNPH*4221A**	58CV(A,X)155−22	28,200	13.0	16.0
3655966	24ACC630A**30	CNPH*4221A**	58ME(B,C)060−12	28,400	13.0	16.0
3655969	24ACC630A**30	CNPH*4221A**	58ME(B,C)080−12	28,400	13.0	16.0
3655972	24ACC630A**30	CNPH*4221A**	58ME(B,C)080−16	28,600	13.0	16.0
3655978	24ACC630A**30	CNPH*4221A**	58MEB040−12	28,400	13.0	16.0
3655981	24ACC630A**30	CNPH*4221A**	58MV(B,C)060−14	28,200	13.0	16.0
3655984	24ACC630A**30	CNPH*4221A**	58MV(B,C)080−14	28,000	13.0	15.5
3655987	24ACC630A**30	CNPH*4221A**	58MV(B,C)080−20	28,000	13.0	16.0
3655990	24ACC630A**30	CNPH*4221A**	58MV(B,C)100−20	27,800	13.0	15.5
3655993	24ACC630A**30	CNPH*4221A**	58MV(B,C)120−20	28,200	13.0	16.0
3655996	24ACC630A**30	CNPH*4221A**	58MVB040−14	28,000	13.0	15.5
3656000	24ACC630A**30	CNPH*4221A**	58PH*070−16	28,200	12.5	15.5
3656003	24ACC630A**30	CNPH*4221A**	58PH*090−16	28,400	13.0	16.0
3656009	24ACC630A**30	CNPH*4221A**	58VLR105−12	28,000	13.0	15.5
3656013	24ACC630A**30	CNPH*4221A**	58VMR105−12	27,800	13.0	15.5
3656032	24ACC630A**30	CNPH*4221A**+TDR		28,200	11.5	14.0
3656260	24ACC630A**30	CNPV*3014A**	58CV(A,X)070−12	27,800	12.5	15.0
3656263	24ACC630A**30	CNPV*3014A**+TDR		28,000	12.0	14.0
3656265	24ACC630A**30	CNPV*3017A**	58CV(A,X)070−12	27,800	12.5	15.5
3656267	24ACC630A**30	CNPV*3017A**	58CV(A,X)090−16	27,800	13.0	15.5
4138245	24ACC630A**30	CNPV*3017A**	58HDV040−−12	27,600	12.5	15.0
4138246	24ACC630A**30	CNPV*3017A**	58HDV060−−12	27,800	12.5	15.0
3656269	24ACC630A**30	CNPV*3017A**	58ME(B,C)060−12	28,200	13.0	15.5
3656271	24ACC630A**30	CNPV*3017A**	58ME(B,C)080−12	28,000	13.0	16.0
3656272	24ACC630A**30	CNPV*3017A**	58ME(B,C)080−16	28,200	13.0	15.5
3656274	24ACC630A**30	CNPV*3017A**	58MEB040−12	28,200	13.0	16.0
3656276	24ACC630A**30	CNPV*3017A**	58MV(B,C)060−14	28,000	13.0	15.5
3656278	24ACC630A**30	CNPV*3017A**	58PH*070−16	28,000	12.5	15.0
3656284	24ACC630A**30	CNPV*3017A**	58UVB060−14	28,000	13.0	15.5
3656280	24ACC630A**30	CNPV*3017A**	58VLR105−12	27,800	13.0	15.5
3656282	24ACC630A**30	CNPV*3017A**	58VMR105−12	27,400	13.0	15.5
4764907	24ACC630A**30	CNPV*3017A**	59*N*A060V17**14	27,600	12.7	15.5
4764908	24ACC630A**30	CNPV*3017A**	59*N*A080V17**14	27,800	12.7	15.5
4764909	24ACC630A**30	CNPV*3017A**	59*P5A060E17**14	27,800	12.7	15.5
4764910	24ACC630A**30	CNPV*3017A**	59*P5A080E17**16	28,000	12.7	15.5
4138270	24ACC630A**30	CNPV*3017A**	OVLAAB036098	27,800	12.5	15.0
4138269	24ACC630A**30	CNPV*3017A**	OVMAAB036098	27,800	12.5	15.0
3656286	24ACC630A**30	CNPV*3017A**+TDR		28,000	12.0	14.0
3656288	24ACC630A**30	CNPV*3117A**	58CV(A,X)070−12	28,400	13.0	16.0
3656290	24ACC630A**30	CNPV*3117A**	58CV(A,X)090−16	28,400	13.0	16.0
4138247	24ACC630A**30	CNPV*3117A**	58HDV040−−12	28,400	13.0	15.0
4138248	24ACC630A**30	CNPV*3117A**	58HDV060−−12	28,600	13.0	15.5
3656292	24ACC630A**30	CNPV*3117A**	58ME(B,C)060−12	28,800	13.0	16.0
3656294	24ACC630A**30	CNPV*3117A**	58ME(B,C)080−12	28,800	13.0	16.0

See notes on page 46

COMBINATION RATINGS CONTINUED

AHRI Ref. No.	Model Number	Indoor Model	Furnace Model	Capacity	EER	SEER
3656295	24ACC630A**30	CNPV*3117A**	58ME(B,C)080−16	29,000	13.0	16.0
3656297	24ACC630A**30	CNPV*3117A**	58MEB040−12	28,800	13.0	16.0
3656299	24ACC630A**30	CNPV*3117A**	58MV(B,C)060−14	28,600	13.0	16.0
3656301	24ACC630A**30	CNPV*3117A**	58PH*070−16	28,600	13.0	16.0
3656307	24ACC630A**30	CNPV*3117A**	58UVB060−14	28,600	13.0	16.0
3656303	24ACC630A**30	CNPV*3117A**	58VLR105−12	28,400	13.0	16.0
3656305	24ACC630A**30	CNPV*3117A**	58VMR105−12	28,000	13.0	16.0
4764911	24ACC630A**30	CNPV*3117A**	59*N*A060V17**14	28,200	12.7	15.5
4764912	24ACC630A**30	CNPV*3117A**	59*N*A080V17**14	28,400	13.0	16.0
4764913	24ACC630A**30	CNPV*3117A**	59*P5A060E17**14	28,400	13.0	16.0
4764914	24ACC630A**30	CNPV*3117A**	59*P5A080E17**16	28,600	13.0	16.0
4138272	24ACC630A**30	CNPV*3117A**	OVLAAB036098	28,400	13.0	15.5
4138271	24ACC630A**30	CNPV*3117A**	OVMAAB036098	28,400	13.0	15.5
3656311	24ACC630A**30	CNPV*3617A**	58CV(A,X)070−12	27,800	12.5	15.5
3656314	24ACC630A**30	CNPV*3617A**	58CV(A,X)090−16	27,800	13.0	15.5
4138249	24ACC630A**30	CNPV*3617A**	58HDV040−−12	27,600	12.5	15.0
4138250	24ACC630A**30	CNPV*3617A**	58HDV060−−12	27,800	12.5	15.0
3656317	24ACC630A**30	CNPV*3617A**	58ME(B,C)060−12	28,200	13.0	15.5
3656320	24ACC630A**30	CNPV*3617A**	58ME(B,C)080−12	28,000	13.0	16.0
3656322	24ACC630A**30	CNPV*3617A**	58ME(B,C)080−16	28,200	13.0	15.5
3656325	24ACC630A**30	CNPV*3617A**	58MEB040−12	28,200	13.0	16.0
3656328	24ACC630A**30	CNPV*3617A**	58MV(B,C)060−14	28,000	13.0	15.5
3656332	24ACC630A**30	CNPV*3617A**	58PH*070−16	28,000	12.5	15.0
3656341	24ACC630A**30	CNPV*3617A**	58UVB060−14	28,000	13.0	15.5
3656335	24ACC630A**30	CNPV*3617A**	58VLR105−12	27,800	13.0	15.5
3656338	24ACC630A**30	CNPV*3617A**	58VMR105−12	27,400	13.0	15.5
4764915	24ACC630A**30	CNPV*3617A**	59*N*A060V17**14	27,600	12.7	15.5
4764916	24ACC630A**30	CNPV*3617A**	59*N*A080V17**14	27,800	12.7	15.5
4764917	24ACC630A**30	CNPV*3617A**	59*P5A060E17**14	27,800	12.7	15.5
4764918	24ACC630A**30	CNPV*3617A**	59*P5A080E17**16	28,000	12.7	15.5
4138274	24ACC630A**30	CNPV*3617A**	OVLAAB036098	27,800	12.5	15.0
4138273	24ACC630A**30	CNPV*3617A**	OVMAAB036098	27,800	12.5	15.0
3656344	24ACC630A**30	CNPV*3617A**+TDR		28,000	12.0	14.0
3656347	24ACC630A**30	CNPV*3621A**	58CV(A,X)090−16	27,800	13.0	16.0
3656350	24ACC630A**30	CNPV*3621A**	58CV(A,X)110−20	27,800	13.0	15.5
4138251	24ACC630A**30	CNPV*3621A**	58HDV040−−12	27,800	12.5	15.0
4138252	24ACC630A**30	CNPV*3621A**	58HDV060−−12	27,800	12.5	15.0
3656353	24ACC630A**30	CNPV*3621A**	58ME(B,C)060−12	28,200	13.0	15.5
3656356	24ACC630A**30	CNPV*3621A**	58ME(B,C)080−12	28,000	13.0	16.0
3656358	24ACC630A**30	CNPV*3621A**	58ME(B,C)080−16	28,200	13.0	15.5
3656362	24ACC630A**30	CNPV*3621A**	58MEB040−12	28,200	13.0	16.0
3656365	24ACC630A**30	CNPV*3621A**	58MV(B,C)060−14	28,000	13.0	15.5
3656368	24ACC630A**30	CNPV*3621A**	58MV(B,C)080−14	27,600	12.5	15.5
3656371	24ACC630A**30	CNPV*3621A**	58MV(B,C)080−20	27,800	12.5	15.5
3656374	24ACC630A**30	CNPV*3621A**	58MV(B,C)100−20	27,600	12.5	15.5
3656376	24ACC630A**30	CNPV*3621A**	58PH*070−16	28,000	12.5	15.0
3656378	24ACC630A**30	CNPV*3621A**	58PH*090−16	28,000	12.5	15.5
3656390	24ACC630A**30	CNPV*3621A**	58UVB060−14	28,000	13.0	15.5
3656393	24ACC630A**30	CNPV*3621A**	58UVB080−14	27,600	12.5	15.5
3656396	24ACC630A**30	CNPV*3621A**	58UVB080−20	27,800	12.5	15.5
3656399	24ACC630A**30	CNPV*3621A**	58UVB100−20	27,600	12.5	15.5
3656382	24ACC630A**30	CNPV*3621A**	58VLR105−12	27,800	13.0	15.5
3656386	24ACC630A**30	CNPV*3621A**	58VMR105−12	27,400	13.0	15.5
4764919	24ACC630A**30	CNPV*3621A**	59*N*A060V17**14	27,600	12.7	15.5
4764920	24ACC630A**30	CNPV*3621A**	59*N*A080V17**14	27,800	12.7	15.5
4764921	24ACC630A**30	CNPV*3621A**	59*N*A100V21**20	28,000	12.7	15.5
4764922	24ACC630A**30	CNPV*3621A**	59*P5A060E17**14	27,800	12.7	15.5
4764923	24ACC630A**30	CNPV*3621A**	59*P5A080E17**16	28,000	12.7	15.5
4138276	24ACC630A**30	CNPV*3621A**	OVLAAB036098	27,800	12.5	15.0
4138275	24ACC630A**30	CNPV*3621A**	OVMAAB036098	27,800	12.5	15.0
3656402	24ACC630A**30	CNPV*3621A**+TDR		28,000	12.0	14.0
4138253	24ACC630A**30	CNPV*3717A**	58HDV040−−12	28,600	13.0	15.5
4138254	24ACC630A**30	CNPV*3717A**	58HDV060−−12	29,000	13.0	15.5
3843129	24ACC630A**30	CNPV*3717A**	58ME(B,C)060−12	29,000	13.0	16.0
4764924	24ACC630A**30	CNPV*3717A**	59*N*A060V17**14	28,600	13.0	16.0
4764925	24ACC630A**30	CNPV*3717A**	59*N*A080V17**14	28,600	13.0	16.0
4764926	24ACC630A**30	CNPV*3717A**	59*P5A060E17**14	28,800	13.0	16.0
4764927	24ACC630A**30	CNPV*3717A**	59*P5A080E17**16	29,000	13.0	16.0
4138278	24ACC630A**30	CNPV*3717A**	OVLAAB036098	28,600	13.0	16.0
4138277	24ACC630A**30	CNPV*3717A**	OVMAAB036098	28,600	13.0	16.0
3656417	24ACC630A**30	CNPV*4217A**	58CV(A,X)070−12	28,200	13.0	16.0
3656420	24ACC630A**30	CNPV*4217A**	58CV(A,X)090−16	28,200	13.0	16.0

See notes on page 46

COMBINATION RATINGS CONTINUED

AHRI Ref. No.	Model Number	Indoor Model	Furnace Model	Capacity	EER	SEER
3656423	24ACC630A**30	CNPV*4217A**	58ME(B,C)060−12	28,600	13.0	16.0
3656426	24ACC630A**30	CNPV*4217A**	58ME(B,C)080−12	28,600	13.0	16.0
3656429	24ACC630A**30	CNPV*4217A**	58ME(B,C)080−16	28,800	13.0	16.0
3656432	24ACC630A**30	CNPV*4217A**	58MEB040−12	28,600	13.0	16.0
3656435	24ACC630A**30	CNPV*4217A**	58MV(B,C)060−14	28,400	13.0	16.0
3656439	24ACC630A**30	CNPV*4217A**	58PH*070−16	28,400	13.0	15.5
3656446	24ACC630A**30	CNPV*4217A**	58UVB060−14	28,400	13.0	16.0
3656442	24ACC630A**30	CNPV*4217A**	58VLR105−12	28,200	13.0	16.0
3656444	24ACC630A**30	CNPV*4217A**	58VMR105−12	28,000	13.0	16.0
3656449	24ACC630A**30	CNPV*4217A**+TDR		28,400	11.5	14.0
3656452	24ACC630A**30	CNPV*4221A**	58CV(A,X)090−16	28,000	13.0	16.0
3656455	24ACC630A**30	CNPV*4221A**	58CV(A,X)110−20	28,200	13.0	16.0
3656458	24ACC630A**30	CNPV*4221A**	58ME(B,C)060−12	28,400	13.0	16.0
3656461	24ACC630A**30	CNPV*4221A**	58ME(B,C)080−12	28,400	13.0	16.0
3656464	24ACC630A**30	CNPV*4221A**	58ME(B,C)080−16	28,600	13.0	16.0
3656469	24ACC630A**30	CNPV*4221A**	58MEB040−12	28,400	13.0	16.0
3656472	24ACC630A**30	CNPV*4221A**	58MV(B,C)060−14	28,200	13.0	16.0
3656475	24ACC630A**30	CNPV*4221A**	58MV(B,C)080−14	28,000	13.0	15.5
3656478	24ACC630A**30	CNPV*4221A**	58MV(B,C)080−20	28,000	13.0	16.0
3656481	24ACC630A**30	CNPV*4221A**	58MV(B,C)100−20	27,800	13.0	15.5
3656484	24ACC630A**30	CNPV*4221A**	58PH*070−16	28,200	12.5	15.5
3656487	24ACC630A**30	CNPV*4221A**	58PH*090−16	28,400	13.0	16.0
3656500	24ACC630A**30	CNPV*4221A**	58UVB060−14	28,200	13.0	16.0
3656503	24ACC630A**30	CNPV*4221A**	58UVB080−14	28,000	13.0	15.5
3656506	24ACC630A**30	CNPV*4221A**	58UVB080−20	28,000	13.0	16.0
3656509	24ACC630A**30	CNPV*4221A**	58UVB100−20	27,800	13.0	15.5
3656492	24ACC630A**30	CNPV*4221A**	58VLR105−12	28,000	13.0	15.5
3656496	24ACC630A**30	CNPV*4221A**	58VMR105−12	27,800	13.0	15.5
3656512	24ACC630A**30	CNPV*4221A**+TDR		28,200	11.5	14.0
3818470	24ACC630A**30	CNPV*4821A**	58MV(B,C)080−14	28,200	13.0	16.0
3818471	24ACC630A**30	CNPV*4821A**	58MV(B,C)080−20	28,200	13.0	16.0
3818472	24ACC630A**30	CNPV*4821A**	58MV(B,C)100−20	28,200	13.0	16.0
3860887	24ACC630A**30	CNPV*4821A**	58UVB080−14	28,200	13.0	16.0
3860888	24ACC630A**30	CNPV*4821A**	58UVB080−20	28,200	13.0	16.0
3860889	24ACC630A**30	CNPV*4821A**	58UVB100−20	28,200	13.0	16.0
3656722	24ACC630A**30	CSPH*3012A**	58CV(A,X)070−12	27,800	12.5	15.5
3656724	24ACC630A**30	CSPH*3012A**	58CV(A,X)090−16	28,000	13.0	15.5
3656726	24ACC630A**30	CSPH*3012A**	58CV(A,X)110−20	28,000	13.0	15.5
3656728	24ACC630A**30	CSPH*3012A**	58CV(A,X)135−22	28,000	13.0	15.5
3656730	24ACC630A**30	CSPH*3012A**	58CV(A,X)155−22	28,000	13.0	16.0
3656731	24ACC630A**30	CSPH*3012A**	58HDV040−−12	27,800	12.5	14.5
3656732	24ACC630A**30	CSPH*3012A**	58HDV060−−12	28,000	12.5	15.0
3656734	24ACC630A**30	CSPH*3012A**	58ME(B,C)060−12	28,200	13.0	15.5
3656736	24ACC630A**30	CSPH*3012A**	58ME(B,C)080−12	28,200	13.0	15.5
3656737	24ACC630A**30	CSPH*3012A**	58ME(B,C)080−16	28,200	13.0	15.5
3656739	24ACC630A**30	CSPH*3012A**	58MEB040−12	28,200	13.0	16.0
3656741	24ACC630A**30	CSPH*3012A**	58MV(B,C)060−14	28,000	13.0	15.5
3656743	24ACC630A**30	CSPH*3012A**	58MV(B,C)080−14	27,800	12.5	15.5
3656745	24ACC630A**30	CSPH*3012A**	58MV(B,C)080−20	28,000	12.5	15.5
3656747	24ACC630A**30	CSPH*3012A**	58MV(B,C)100−20	27,600	12.5	15.5
3656749	24ACC630A**30	CSPH*3012A**	58MV(B,C)120−20	28,000	13.0	15.5
3656751	24ACC630A**30	CSPH*3012A**	58MVB040−14	27,800	12.5	15.0
3656753	24ACC630A**30	CSPH*3012A**	58PH*070−16	28,000	12.5	15.0
3656754	24ACC630A**30	CSPH*3012A**	58PH*090−16	28,000	12.5	15.5
3656756	24ACC630A**30	CSPH*3012A**	58VLR105−12	28,000	13.0	15.5
3656758	24ACC630A**30	CSPH*3012A**	58VMR105−12	27,600	13.0	15.5
4764946	24ACC630A**30	CSPH*3012A**	59*N*A060V17**14	27,800	12.7	15.5
4764947	24ACC630A**30	CSPH*3012A**	59*N*A080V17**14	28,000	12.7	15.5
4764948	24ACC630A**30	CSPH*3012A**	59*N*A100V21**20	28,000	12.7	15.5
4764949	24ACC630A**30	CSPH*3012A**	59*N*A120V24**22	28,000	12.7	15.5
4764950	24ACC630A**30	CSPH*3012A**	59*P5A060E17**14	27,800	12.7	15.5
4764951	24ACC630A**30	CSPH*3012A**	59*P5A080E17**16	28,200	12.7	15.5
4138286	24ACC630A**30	CSPH*3012A**	OVLAAB036098	27,800	12.5	15.0
4138285	24ACC630A**30	CSPH*3012A**	OVMAAB036098	27,800	12.5	15.0
3656770	24ACC630A**30	CSPH*3012A**+TDR		28,200	11.5	14.0
3656772	24ACC630A**30	CSPH*3612A**	58CV(A,X)070−12	28,200	13.0	16.0
3656775	24ACC630A**30	CSPH*3612A**	58CV(A,X)090−16	28,400	13.0	16.0
3656778	24ACC630A**30	CSPH*3612A**	58CV(A,X)110−20	28,400	13.0	16.0
3656781	24ACC630A**30	CSPH*3612A**	58CV(A,X)135−22	28,400	13.0	16.0
3656784	24ACC630A**30	CSPH*3612A**	58CV(A,X)155−22	28,400	13.0	16.0
3656786	24ACC630A**30	CSPH*3612A**	58HDV040−−12	28,400	12.5	15.0
3656788	24ACC630A**30	CSPH*3612A**	58HDV060−−12	28,600	12.5	15.0

See notes on page 46

COMBINATION RATINGS CONTINUED

AHRI Ref. No.	Model Number	Indoor Model	Furnace Model	Capacity	EER	SEER
3656793	24ACC630A**30	CSPH*3612A**	58ME(B,C)060−12	28,800	13.0	16.0
3656796	24ACC630A**30	CSPH*3612A**	58ME(B,C)080−12	28,600	13.0	16.0
3656798	24ACC630A**30	CSPH*3612A**	58ME(B,C)080−16	28,800	13.0	16.0
3656802	24ACC630A**30	CSPH*3612A**	58MEB040−12	28,800	13.0	16.0
3656805	24ACC630A**30	CSPH*3612A**	58MV(B,C)060−14	28,400	13.0	16.0
3656808	24ACC630A**30	CSPH*3612A**	58MV(B,C)080−14	28,200	13.0	16.0
3656811	24ACC630A**30	CSPH*3612A**	58MV(B,C)080−20	28,400	13.0	16.0
3656814	24ACC630A**30	CSPH*3612A**	58MV(B,C)100−20	28,200	13.0	16.0
3656817	24ACC630A**30	CSPH*3612A**	58MV(B,C)120−20	28,400	13.0	16.0
3656820	24ACC630A**30	CSPH*3612A**	58MVB040−14	28,200	13.0	16.0
3656824	24ACC630A**30	CSPH*3612A**	58PH*070−16	28,600	13.0	15.5
3656826	24ACC630A**30	CSPH*3612A**	58PH*090−16	28,600	13.0	16.0
3656830	24ACC630A**30	CSPH*3612A**	58VLR105−12	28,400	13.0	16.0
3656834	24ACC630A**30	CSPH*3612A**	58VMR105−12	28,000	13.0	16.0
4764952	24ACC630A**30	CSPH*3612A**	59*N*A060V17**14	28,200	12.7	15.5
4764953	24ACC630A**30	CSPH*3612A**	59*N*A080V17**14	28,400	13.0	16.0
4764954	24ACC630A**30	CSPH*3612A**	59*N*A100V21**20	28,400	13.0	16.0
4764955	24ACC630A**30	CSPH*3612A**	59*N*A120V24**22	28,400	13.0	16.0
4764956	24ACC630A**30	CSPH*3612A**	59*P5A060E17**14	28,400	13.0	16.0
4764957	24ACC630A**30	CSPH*3612A**	59*P5A080E17**16	28,600	13.0	16.0
4138288	24ACC630A**30	CSPH*3612A**	OVLAAB036098	28,200	13.0	15.5
4138287	24ACC630A**30	CSPH*3612A**	OVMAAB036098	28,400	13.0	15.5
3656853	24ACC630A**30	CSPH*3612A**+TDR		28,600	12.0	14.0
3656855	24ACC630A**30	CSPH*4212A**	58CV(A,X)070−12	28,400	13.0	16.0
3656858	24ACC630A**30	CSPH*4212A**	58CV(A,X)090−16	28,400	13.0	16.0
3656861	24ACC630A**30	CSPH*4212A**	58CV(A,X)110−20	28,600	13.0	16.0
3656864	24ACC630A**30	CSPH*4212A**	58CV(A,X)135−22	28,600	13.0	16.0
3656867	24ACC630A**30	CSPH*4212A**	58CV(A,X)155−22	28,600	13.0	16.0
3656876	24ACC630A**30	CSPH*4212A**	58ME(B,C)060−12	29,000	13.0	16.0
3656879	24ACC630A**30	CSPH*4212A**	58ME(B,C)080−12	28,800	13.0	16.0
3656882	24ACC630A**30	CSPH*4212A**	58ME(B,C)080−16	29,000	13.0	16.0
3656888	24ACC630A**30	CSPH*4212A**	58MEB040−12	29,000	13.0	16.0
3656891	24ACC630A**30	CSPH*4212A**	58MV(B,C)060−14	28,600	13.0	16.0
3656894	24ACC630A**30	CSPH*4212A**	58MV(B,C)080−14	28,400	13.0	16.0
3656897	24ACC630A**30	CSPH*4212A**	58MV(B,C)080−20	28,400	13.0	16.0
3656900	24ACC630A**30	CSPH*4212A**	58MV(B,C)100−20	28,200	13.0	16.0
3656903	24ACC630A**30	CSPH*4212A**	58MV(B,C)120−20	28,600	13.0	16.0
3656906	24ACC630A**30	CSPH*4212A**	58MVB040−14	28,400	13.0	16.0
3656910	24ACC630A**30	CSPH*4212A**	58PH*070−16	28,600	13.0	16.0
3656913	24ACC630A**30	CSPH*4212A**	58PH*090−16	28,800	13.0	16.0
3656919	24ACC630A**30	CSPH*4212A**	58VLR105−12	28,600	13.0	16.0
3656923	24ACC630A**30	CSPH*4212A**	58VMR105−12	28,200	13.0	16.0
3656942	24ACC630A**30	CSPH*4212A**+TDR		28,600	12.0	14.0
3804424	24ACC630A**30	FB4CNF030		28,000	12.5	14.5
3693328	24ACC630A**30	FB4CNF030+TXV		28,000	12.5	15.0
3804425	24ACC630A**30	FB4CNF036		28,000	12.5	14.5
3693329	24ACC630A**30	FB4CNF036+TXV		28,000	12.5	15.0
3657078	24ACC630A**30	FE4AN(B,F)003+UI		28,200	13.0	16.0
3657081	24ACC630A**30	FE4AN(B,F)005+UI		28,800	13.0	16.5
3657090	24ACC630A**30	FE4ANF002+UI		28,000	13.0	16.0
3657092	24ACC630A**30	FE5ANB004+UI		29,000	13.0	16.5
3657102	24ACC630A**30	FF1ENP030		27,600	12.0	14.0
3657104	24ACC630A**30	FF1ENP031		28,200	12.5	15.0
3657106	24ACC630A**30	FF1ENP036		28,000	12.0	14.0
3657109	24ACC630A**30	FF1ENP037		28,200	12.5	15.0
3657127	24ACC630A**30	FV4CN(B,F)003		28,200	13.0	16.0
3657130	24ACC630A**30	FV4CN(B,F)005		28,800	13.0	16.0
3657139	24ACC630A**30	FV4CNF002		28,000	13.0	16.0
3657158	24ACC630A**30	FX4DN(B,F)031		28,400	13.0	15.5
3657159	24ACC630A**30	FX4DN(B,F)037		28,800	13.0	16.0
3804426	24ACC630A**30	FY5BNF030		28,000	12.5	14.5
3693330	24ACC630A**30	FY5BNF030+TXV		28,200	12.5	14.5
3804427	24ACC630A**30	FY5BNF036		28,000	12.0	14.0
3693331	24ACC630A**30	FY5BNF036+TXV		28,200	12.0	14.5
3656416	24ACC636A**30	†CNPV*3717A**+TDR		34,400	12.0	14.5
3655287	24ACC636A**30	CAP**3614A**	58CV(A,X)070−12	32,800	12.0	15.0
3655289	24ACC636A**30	CAP**3614A**	58PH*045−08	32,600	11.5	14.0
3655292	24ACC636A**30	CAP**3614A**+TDR		32,800	11.5	14.0
3655295	24ACC636A**30	CAP**3617A**	58CV(A,X)070−12	32,800	12.0	15.0
3655298	24ACC636A**30	CAP**3617A**	58CV(A,X)090−16	33,000	12.5	15.5
3655301	24ACC636A**30	CAP**3617A**	58ME(B,C)060−12	33,200	12.5	15.0

See notes on page 46

COMBINATION RATINGS CONTINUED

AHRI Ref. No.	Model Number	Indoor Model	Furnace Model	Capacity	EER	SEER
3655304	24ACC636A**30	CAP**3617A**	58ME(B,C)080−12	33,000	12.5	15.0
3655306	24ACC636A**30	CAP**3617A**	58ME(B,C)080−16	33,200	12.5	15.0
3655309	24ACC636A**30	CAP**3617A**	58MEB040−12	33,200	12.5	15.5
3655312	24ACC636A**30	CAP**3617A**	58MV(B,C)060−14	33,000	12.5	15.0
3655314	24ACC636A**30	CAP**3617A**	58PH*045−08	32,800	12.0	14.5
3655316	24ACC636A**30	CAP**3617A**	58PH*070−16	33,000	12.0	15.0
3655325	24ACC636A**30	CAP**3617A**	58UVB060−14	33,000	12.5	15.0
3655319	24ACC636A**30	CAP**3617A**	58VLR105−12	33,000	12.0	15.0
3655322	24ACC636A**30	CAP**3617A**	58VMR105−12	32,600	12.0	15.0
4764958	24ACC636A**30	CAP**3617A**	59*N*A060V17**14	30,000	12.4	15.2
4764959	24ACC636A**30	CAP**3617A**	59*N*A080V17**14	30,000	12.6	15.5
4764960	24ACC636A**30	CAP**3617A**	59*P5A060E17**14	32,800	12.4	15.2
4764961	24ACC636A**30	CAP**3617A**	59*P5A080E17**16	32,800	12.6	15.5
4138316	24ACC636A**30	CAP**3617A**	OVLAAB036098	32,800	12.0	14.5
4138315	24ACC636A**30	CAP**3617A**	OVMAAB036098	32,800	12.0	14.5
4138317	24ACC636A**30	CAP**3617A**	OVMAAB042112	33,000	12.5	15.0
3655328	24ACC636A**30	CAP**3617A**+TDR		33,000	11.5	14.0
3655331	24ACC636A**30	CAP**3619A**	58HDV040−−12	32,800	11.5	14.5
3655334	24ACC636A**30	CAP**3619A**	58HDV060−−12	33,000	12.0	14.5
4764974	24ACC636A**30	CAP**3619A**	59*N*A060V17**14	30,000	12.4	15.2
4764975	24ACC636A**30	CAP**3619A**	59*N*A080V17**14	30,000	12.6	15.5
4764976	24ACC636A**30	CAP**3619A**	59*N*A100V21**20	32,800	12.6	15.5
4764977	24ACC636A**30	CAP**3619A**	59*P5A060E17**14	32,800	12.4	15.2
4764978	24ACC636A**30	CAP**3619A**	59*P5A080E17**16	32,800	12.6	15.5
4138328	24ACC636A**30	CAP**3619A**	OVLAAB036098	32,800	12.0	14.5
4138330	24ACC636A**30	CAP**3619A**	OVLAAB048112	33,000	12.0	15.0
4138327	24ACC636A**30	CAP**3619A**	OVMAAB036098	32,800	12.0	14.5
4138329	24ACC636A**30	CAP**3619A**	OVMAAB042112	33,000	12.5	15.0
3655337	24ACC636A**30	CAP**3619A**+TDR		33,000	11.5	14.0
3655340	24ACC636A**30	CAP**3621A**	58CV(A,X)090−16	33,000	12.5	15.5
3655343	24ACC636A**30	CAP**3621A**	58CV(A,X)110−20	33,000	12.5	15.5
3655346	24ACC636A**30	CAP**3621A**	58ME(B,C)060−12	33,400	12.5	15.5
3655349	24ACC636A**30	CAP**3621A**	58ME(B,C)080−12	33,200	12.5	15.5
3655351	24ACC636A**30	CAP**3621A**	58ME(B,C)080−16	33,200	12.5	15.0
3655352	24ACC636A**30	CAP**3621A**	58ME(B,C)100−20	33,200	13.0	16.0
3655355	24ACC636A**30	CAP**3621A**	58MEB040−12	33,200	12.5	15.5
3655358	24ACC636A**30	CAP**3621A**	58MV(B,C)060−14	33,000	12.5	15.5
3655361	24ACC636A**30	CAP**3621A**	58MV(B,C)080−14	33,000	12.0	15.0
3655364	24ACC636A**30	CAP**3621A**	58MV(B,C)080−20	32,800	12.5	15.0
3655367	24ACC636A**30	CAP**3621A**	58MV(B,C)100−20	33,000	12.5	15.5
3655369	24ACC636A**30	CAP**3621A**	58PH*070−16	33,000	12.0	15.0
3655371	24ACC636A**30	CAP**3621A**	58PH*090−16	33,200	12.5	15.5
3655372	24ACC636A**30	CAP**3621A**	58PH*110−20	33,400	12.5	15.5
3655383	24ACC636A**30	CAP**3621A**	58UVB060−14	33,000	12.5	15.5
3655386	24ACC636A**30	CAP**3621A**	58UVB080−14	33,000	12.0	15.0
3655389	24ACC636A**30	CAP**3621A**	58UVB080−20	32,800	12.5	15.0
3655392	24ACC636A**30	CAP**3621A**	58UVB100−20	33,000	12.5	15.5
3655375	24ACC636A**30	CAP**3621A**	58VLR105−12	33,000	12.0	15.0
3655376	24ACC636A**30	CAP**3621A**	58VLR120−20	33,000	12.5	15.5
3655379	24ACC636A**30	CAP**3621A**	58VMR105−12	32,800	12.5	15.0
3655380	24ACC636A**30	CAP**3621A**	58VMR120−20	32,800	12.5	15.5
4764962	24ACC636A**30	CAP**3621A**	59*N*A060V17**14	30,000	12.5	15.2
4764963	24ACC636A**30	CAP**3621A**	59*N*A080V17**14	30,000	12.7	15.5
4764964	24ACC636A**30	CAP**3621A**	59*N*A100V21**20	32,800	12.7	15.5
4764965	24ACC636A**30	CAP**3621A**	59*P5A060E17**14	33,000	12.4	15.2
4764966	24ACC636A**30	CAP**3621A**	59*P5A080E17**16	32,800	12.7	15.5
4138319	24ACC636A**30	CAP**3621A**	OVLAAB036098	32,800	12.0	15.0
4138321	24ACC636A**30	CAP**3621A**	OVLAAB048112	33,000	12.5	15.0
4138318	24ACC636A**30	CAP**3621A**	OVMAAB036098	32,800	12.0	14.5
4138320	24ACC636A**30	CAP**3621A**	OVMAAB042112	33,000	12.5	15.0
3655395	24ACC636A**30	CAP**3621A**+TDR		33,000	11.5	14.0
3655397	24ACC636A**30	CAP**4221A**	58CV(A,X)090−16	33,200	12.5	15.5
3655400	24ACC636A**30	CAP**4221A**	58CV(A,X)110−20	33,200	12.5	15.5
3655403	24ACC636A**30	CAP**4221A**	58ME(B,C)060−12	33,600	12.5	15.5
3655406	24ACC636A**30	CAP**4221A**	58ME(B,C)080−12	33,400	12.5	15.5
3655409	24ACC636A**30	CAP**4221A**	58ME(B,C)080−16	33,400	12.5	15.5
3655411	24ACC636A**30	CAP**4221A**	58ME(B,C)100−20	33,400	13.0	16.0
3655414	24ACC636A**30	CAP**4221A**	58MEB040−12	33,400	12.5	15.5
3655417	24ACC636A**30	CAP**4221A**	58MV(B,C)060−14	33,400	12.5	15.5
3655420	24ACC636A**30	CAP**4221A**	58MV(B,C)080−14	33,200	12.5	15.0
3655423	24ACC636A**30	CAP**4221A**	58MV(B,C)080−20	33,200	12.5	15.5
3655426	24ACC636A**30	CAP**4221A**	58MV(B,C)100−20	33,200	12.5	15.5

See notes on page 46

COMBINATION RATINGS CONTINUED

AHRI Ref. No.	Model Number	Indoor Model	Furnace Model	Capacity	EER	SEER
3655429	24ACC636A**30	CAP**4221A**	58PH*070−16	33,200	12.0	15.0
3655432	24ACC636A**30	CAP**4221A**	58PH*090−16	33,400	13.0	16.0
3655434	24ACC636A**30	CAP**4221A**	58PH*110−20	33,600	13.0	16.0
3655445	24ACC636A**30	CAP**4221A**	58UVB060−14	33,400	12.5	15.5
3655448	24ACC636A**30	CAP**4221A**	58UVB080−14	33,200	12.5	15.0
3655451	24ACC636A**30	CAP**4221A**	58UVB080−20	33,200	12.5	15.5
3655454	24ACC636A**30	CAP**4221A**	58UVB100−20	33,200	12.5	15.5
3655437	24ACC636A**30	CAP**4221A**	58VLR105−12	33,200	12.5	15.0
3655438	24ACC636A**30	CAP**4221A**	58VLR120−20	33,200	13.0	16.0
3655441	24ACC636A**30	CAP**4221A**	58VMR105−12	33,000	12.5	15.0
3655442	24ACC636A**30	CAP**4221A**	58VMR120−20	33,000	12.5	15.5
4764967	24ACC636A**30	CAP**4221A**	59*N*A060V17**14	32,800	12.6	15.5
4764968	24ACC636A**30	CAP**4221A**	59*N*A080V17**14	32,800	12.7	15.5
4764969	24ACC636A**30	CAP**4221A**	59*N*A100V21**20	33,000	12.7	15.5
4764970	24ACC636A**30	CAP**4221A**	59*P5A060E17**14	33,200	12.5	15.2
4764971	24ACC636A**30	CAP**4221A**	59*P5A080E17**16	33,000	12.7	15.5
4138323	24ACC636A**30	CAP**4221A**	OVLAAB036098	33,000	12.0	15.0
4138325	24ACC636A**30	CAP**4221A**	OVLAAB048112	33,400	12.5	15.0
4138322	24ACC636A**30	CAP**4221A**	OVMAAB036098	33,000	12.0	15.0
4138324	24ACC636A**30	CAP**4221A**	OVMAAB042112	33,200	12.5	15.5
3655457	24ACC636A**30	CAP**4221A**+TDR		33,400	11.5	14.0
3655460	24ACC636A**30	CAP**4224A**	58CV(A,X)110−20	33,200	13.0	15.5
3655463	24ACC636A**30	CAP**4224A**	58CV(A,X)135−22	33,200	13.0	16.0
3655466	24ACC636A**30	CAP**4224A**	58CV(A,X)155−22	33,400	13.0	16.0
3655468	24ACC636A**30	CAP**4224A**	58ME(B,C)100−20	33,400	13.0	16.0
3655472	24ACC636A**30	CAP**4224A**	58MV(B,C)080−14	33,200	12.5	15.0
3655475	24ACC636A**30	CAP**4224A**	58MV(B,C)080−20	33,200	12.5	15.5
3655478	24ACC636A**30	CAP**4224A**	58MV(B,C)100−20	33,200	12.5	15.5
3655481	24ACC636A**30	CAP**4224A**	58MV(B,C)120−20	33,200	13.0	16.0
3655484	24ACC636A**30	CAP**4224A**	58MVB040−14	33,000	12.5	15.0
3655487	24ACC636A**30	CAP**4224A**	58PH*090−16	33,600	13.0	16.0
3655489	24ACC636A**30	CAP**4224A**	58PH*110−20	33,600	13.0	16.0
3655497	24ACC636A**30	CAP**4224A**	58UVB080−14	33,200	12.5	15.0
3655500	24ACC636A**30	CAP**4224A**	58UVB080−20	33,200	12.5	15.5
3655503	24ACC636A**30	CAP**4224A**	58UVB100−20	33,200	12.5	15.5
3655506	24ACC636A**30	CAP**4224A**	58UVB120−20	33,200	13.0	16.0
3655492	24ACC636A**30	CAP**4224A**	58VLR120−20	33,200	13.0	16.0
3655494	24ACC636A**30	CAP**4224A**	58VMR120−20	33,000	12.5	15.5
4764972	24ACC636A**30	CAP**4224A**	59*N*A100V21**20	33,000	12.7	15.5
4764973	24ACC636A**30	CAP**4224A**	59*N*A120V24**22	33,000	13.0	16.0
4138326	24ACC636A**30	CAP**4224A**	OVLAAB048112	33,400	12.5	15.0
3655509	24ACC636A**30	CAP**4224A**+TDR		33,400	11.5	14.0
3655511	24ACC636A**30	CAP**4817A**	58CV(A,X)070−12	33,600	12.5	15.5
3655513	24ACC636A**30	CAP**4817A**	58CV(A,X)090−16	33,800	13.0	16.0
3655516	24ACC636A**30	CAP**4817A**	58ME(B,C)060−12	34,200	13.0	16.0
3655518	24ACC636A**30	CAP**4817A**	58ME(B,C)080−12	34,000	13.0	16.0
3655520	24ACC636A**30	CAP**4817A**	58ME(B,C)080−16	34,200	13.0	16.0
3655523	24ACC636A**30	CAP**4817A**	58MEB040−12	34,000	13.0	16.0
3655525	24ACC636A**30	CAP**4817A**	58MV(B,C)060−14	34,000	13.0	16.0
3655527	24ACC636A**30	CAP**4817A**	58PH*045−08	33,800	12.0	14.5
3655528	24ACC636A**30	CAP**4817A**	58PH*070−16	33,800	12.0	15.0
3655532	24ACC636A**30	CAP**4817A**	58UVB060−14	34,000	13.0	16.0
3655530	24ACC636A**30	CAP**4817A**	58VLR105−12	34,000	12.5	15.5
3655531	24ACC636A**30	CAP**4817A**	58VMR105−12	33,600	12.5	15.5
3655534	24ACC636A**30	CAP**4817A**+TDR		34,000	11.5	14.0
3655537	24ACC636A**30	CAP**4821A**	58CV(A,X)090−16	33,600	13.0	16.0
3655540	24ACC636A**30	CAP**4821A**	58CV(A,X)110−20	33,600	13.0	16.0
3655543	24ACC636A**30	CAP**4821A**	58ME(B,C)060−12	34,000	13.0	16.0
3655545	24ACC636A**30	CAP**4821A**	58ME(B,C)080−12	33,800	13.0	16.0
3655547	24ACC636A**30	CAP**4821A**	58ME(B,C)080−16	34,000	13.0	15.5
3655550	24ACC636A**30	CAP**4821A**	58ME(B,C)100−20	33,800	13.0	16.0
3655553	24ACC636A**30	CAP**4821A**	58MEB040−12	33,800	13.0	16.0
3655555	24ACC636A**30	CAP**4821A**	58MV(B,C)060−14	33,800	13.0	15.5
3655557	24ACC636A**30	CAP**4821A**	58MV(B,C)080−14	33,600	12.5	15.5
3655559	24ACC636A**30	CAP**4821A**	58MV(B,C)080−20	33,600	12.5	15.5
3655562	24ACC636A**30	CAP**4821A**	58MV(B,C)100−20	33,600	13.0	15.5
3655565	24ACC636A**30	CAP**4821A**	58PH*070−16	33,600	12.0	15.0
3655567	24ACC636A**30	CAP**4821A**	58PH*090−16	34,000	13.0	16.0
3655570	24ACC636A**30	CAP**4821A**	58PH*110−20	34,000	13.0	16.0
3655581	24ACC636A**30	CAP**4821A**	58UVB060−14	33,800	13.0	15.5
3655583	24ACC636A**30	CAP**4821A**	58UVB080−14	33,600	12.5	15.5
3655585	24ACC636A**30	CAP**4821A**	58UVB080−20	33,600	12.5	15.5

See notes on page 46

COMBINATION RATINGS CONTINUED

AHRI Ref. No.	Model Number	Indoor Model	Furnace Model	Capacity	EER	SEER
3655588	24ACC636A**30	CAP**4821A**	58UVB100−20	33,600	13.0	15.5
3655573	24ACC636A**30	CAP**4821A**	58VLR105−12	33,800	12.5	15.5
3655574	24ACC636A**30	CAP**4821A**	58VLR120−20	33,600	13.0	16.0
3655577	24ACC636A**30	CAP**4821A**	58VMR105−12	33,400	12.5	15.5
3655578	24ACC636A**30	CAP**4821A**	58VMR120−20	33,400	12.5	15.5
3655591	24ACC636A**30	CAP**4821A**+TDR		33,800	11.5	14.0
3655594	24ACC636A**30	CAP**4823A**	58HDV060−−12	33,800	12.0	15.0
3655595	24ACC636A**30	CAP**4823A**	58HDV080−−20	34,200	12.5	15.0
3655598	24ACC636A**30	CAP**4823A**+TDR		33,800	11.5	14.0
3655601	24ACC636A**30	CAP**4824A**	58CV(A,X)110−20	33,600	13.0	16.0
3655604	24ACC636A**30	CAP**4824A**	58CV(A,X)135−22	33,600	13.0	16.0
3655607	24ACC636A**30	CAP**4824A**	58CV(A,X)155−22	33,800	13.0	16.0
3655610	24ACC636A**30	CAP**4824A**	58ME(B,C)100−20	33,800	13.0	16.0
3655615	24ACC636A**30	CAP**4824A**	58MV(B,C)080−14	33,600	12.5	15.5
3655617	24ACC636A**30	CAP**4824A**	58MV(B,C)080−20	33,600	13.0	15.5
3655620	24ACC636A**30	CAP**4824A**	58MV(B,C)100−20	33,800	13.0	16.0
3655623	24ACC636A**30	CAP**4824A**	58MV(B,C)120−20	33,600	13.0	16.0
3655626	24ACC636A**30	CAP**4824A**	58MVB040−14	33,400	12.5	15.5
3655628	24ACC636A**30	CAP**4824A**	58PH*090−16	34,000	13.0	16.0
3655631	24ACC636A**30	CAP**4824A**	58PH*110−20	34,200	13.0	16.0
3655642	24ACC636A**30	CAP**4824A**	58UVB080−14	33,600	12.5	15.5
3655644	24ACC636A**30	CAP**4824A**	58UVB080−20	33,600	13.0	15.5
3655647	24ACC636A**30	CAP**4824A**	58UVB100−20	33,800	13.0	16.0
3655650	24ACC636A**30	CAP**4824A**	58UVB120−20	33,600	13.0	16.0
3655636	24ACC636A**30	CAP**4824A**	58VLR120−20	33,600	13.0	16.0
3655639	24ACC636A**30	CAP**4824A**	58VMR120−20	33,600	13.0	16.0
3655653	24ACC636A**30	CAP**4824A**+TDR		33,800	11.5	14.0
3843132	24ACC636A**30	CAP**6021A**	58MV(B,C)080−14	34,000	12.5	15.5
3860890	24ACC636A**30	CAP**6021A**	58UVB080−14	34,000	12.5	15.5
3655875	24ACC636A**30	CNPH*3617A**	58CV(A,X)070−12	32,800	12.0	15.0
3655878	24ACC636A**30	CNPH*3617A**	58CV(A,X)090−16	32,800	12.5	15.0
3655881	24ACC636A**30	CNPH*3617A**	58CV(A,X)110−20	32,800	12.5	15.0
3655884	24ACC636A**30	CNPH*3617A**	58CV(A,X)135−22	32,800	12.5	15.0
3655887	24ACC636A**30	CNPH*3617A**	58CV(A,X)155−22	33,000	12.5	15.5
4138303	24ACC636A**30	CNPH*3617A**	58HDV040−−12	32,600	11.5	14.0
4138304	24ACC636A**30	CNPH*3617A**	58HDV060−−12	32,800	12.0	14.5
4138305	24ACC636A**30	CNPH*3617A**	58HDV080−−20	33,200	12.0	15.0
4138306	24ACC636A**30	CNPH*3617A**	58HDV100−−20	33,000	12.5	15.0
3655890	24ACC636A**30	CNPH*3617A**	58ME(B,C)060−12	33,000	12.0	15.0
3655893	24ACC636A**30	CNPH*3617A**	58ME(B,C)080−12	33,000	12.5	15.0
3655895	24ACC636A**30	CNPH*3617A**	58ME(B,C)080−16	33,000	12.0	15.0
3655896	24ACC636A**30	CNPH*3617A**	58ME(B,C)100−20	32,800	12.5	15.5
3655899	24ACC636A**30	CNPH*3617A**	58MEB040−12	33,000	12.5	15.0
3655902	24ACC636A**30	CNPH*3617A**	58MV(B,C)060−14	33,000	12.0	15.0
3655905	24ACC636A**30	CNPH*3617A**	58MV(B,C)080−14	32,800	12.0	14.5
3655908	24ACC636A**30	CNPH*3617A**	58MV(B,C)080−20	32,800	12.0	15.0
3655911	24ACC636A**30	CNPH*3617A**	58MV(B,C)100−20	33,000	12.0	15.0
3655914	24ACC636A**30	CNPH*3617A**	58MV(B,C)120−20	32,800	12.5	15.0
3655917	24ACC636A**30	CNPH*3617A**	58MVB040−14	32,600	12.0	14.5
3655919	24ACC636A**30	CNPH*3617A**	58PH*045−08	32,800	12.0	14.5
3655921	24ACC636A**30	CNPH*3617A**	58PH*070−16	32,800	12.0	14.5
3655923	24ACC636A**30	CNPH*3617A**	58PH*090−16	33,000	12.5	15.0
3655924	24ACC636A**30	CNPH*3617A**	58PH*110−20	33,000	12.5	15.5
3655927	24ACC636A**30	CNPH*3617A**	58VLR105−12	33,000	12.0	15.0
3655928	24ACC636A**30	CNPH*3617A**	58VLR120−20	32,800	12.5	15.5
3655931	24ACC636A**30	CNPH*3617A**	58VMR105−12	32,600	12.0	15.0
3655932	24ACC636A**30	CNPH*3617A**	58VMR120−20	32,800	12.0	15.0
4765003	24ACC636A**30	CNPH*3617A**	59*N*A060V17**14	30,000	12.3	15.0
4765004	24ACC636A**30	CNPH*3617A**	59*N*A080V17**14	30,000	12.5	15.2
4765005	24ACC636A**30	CNPH*3617A**	59*N*A100V21**20	30,000	12.5	15.2
4765006	24ACC636A**30	CNPH*3617A**	59*N*A120V24**22	32,800	12.7	15.5
4765007	24ACC636A**30	CNPH*3617A**	59*P5A060E17**14	32,800	12.3	15.0
4765008	24ACC636A**30	CNPH*3617A**	59*P5A080E17**16	30,000	12.5	15.2
4138350	24ACC636A**30	CNPH*3617A**	OVLAAB036098	32,600	12.0	14.5
4138352	24ACC636A**30	CNPH*3617A**	OVLAAB048112	33,000	12.0	14.5
4138349	24ACC636A**30	CNPH*3617A**	OVMAAB036098	32,800	12.0	14.5
4138351	24ACC636A**30	CNPH*3617A**	OVMAAB042112	32,800	12.0	15.0
3655950	24ACC636A**30	CNPH*3617A**+TDR		33,000	11.5	14.0
3655952	24ACC636A**30	CNPH*4221A**	58CV(A,X)070−12	33,000	12.0	15.0
3655955	24ACC636A**30	CNPH*4221A**	58CV(A,X)090−16	33,200	12.5	15.5
3655958	24ACC636A**30	CNPH*4221A**	58CV(A,X)110−20	33,200	12.5	15.5
3655961	24ACC636A**30	CNPH*4221A**	58CV(A,X)135−22	33,200	12.5	15.5

See notes on page 46

COMBINATION RATINGS CONTINUED

AHRI Ref. No.	Model Number	Indoor Model	Furnace Model	Capacity	EER	SEER
3655964	24ACC636A**30	CNPH*4221A**	58CV(A,X)155−22	33,400	13.0	16.0
4138307	24ACC636A**30	CNPH*4221A**	58HDV040−−12	33,000	12.0	14.5
4138308	24ACC636A**30	CNPH*4221A**	58HDV060−−12	33,400	12.0	14.5
4138309	24ACC636A**30	CNPH*4221A**	58HDV080−−20	33,800	12.5	15.0
4138310	24ACC636A**30	CNPH*4221A**	58HDV100−−20	33,600	12.5	15.5
3655967	24ACC636A**30	CNPH*4221A**	58ME(B,C)060−12	33,400	12.5	15.5
3655970	24ACC636A**30	CNPH*4221A**	58ME(B,C)080−12	33,400	12.5	15.5
3655973	24ACC636A**30	CNPH*4221A**	58ME(B,C)080−16	33,400	12.5	15.5
3655975	24ACC636A**30	CNPH*4221A**	58ME(B,C)100−20	33,200	13.0	16.0
3655979	24ACC636A**30	CNPH*4221A**	58MEB040−12	33,400	12.5	15.5
3655982	24ACC636A**30	CNPH*4221A**	58MV(B,C)060−14	33,400	12.5	15.0
3655985	24ACC636A**30	CNPH*4221A**	58MV(B,C)080−14	33,200	12.5	15.0
3655988	24ACC636A**30	CNPH*4221A**	58MV(B,C)080−20	33,200	12.5	15.0
3655991	24ACC636A**30	CNPH*4221A**	58MV(B,C)100−20	33,200	12.5	15.5
3655994	24ACC636A**30	CNPH*4221A**	58MV(B,C)120−20	33,200	12.5	15.5
3655997	24ACC636A**30	CNPH*4221A**	58MVB040−14	33,000	12.0	15.0
3655999	24ACC636A**30	CNPH*4221A**	58PH*045−08	33,200	12.0	14.5
3656001	24ACC636A**30	CNPH*4221A**	58PH*070−16	33,200	12.0	15.0
3656004	24ACC636A**30	CNPH*4221A**	58PH*090−16	33,400	12.5	15.5
3656006	24ACC636A**30	CNPH*4221A**	58PH*110−20	33,600	13.0	16.0
3656010	24ACC636A**30	CNPH*4221A**	58VLR105−12	33,400	12.0	15.0
3656011	24ACC636A**30	CNPH*4221A**	58VLR120−20	33,200	12.5	15.5
3656014	24ACC636A**30	CNPH*4221A**	58VMR105−12	33,000	12.0	15.0
3656015	24ACC636A**30	CNPH*4221A**	58VMR120−20	33,200	12.5	15.5
4765009	24ACC636A**30	CNPH*4221A**	59*N*A060V17**14	32,800	12.5	15.2
4765010	24ACC636A**30	CNPH*4221A**	59*N*A080V17**14	32,800	12.7	15.5
4765011	24ACC636A**30	CNPH*4221A**	59*N*A100V21**20	33,000	12.7	15.5
4765012	24ACC636A**30	CNPH*4221A**	59*N*A120V24**22	33,000	12.7	15.5
4765013	24ACC636A**30	CNPH*4221A**	59*P5A060E17**14	33,200	12.5	15.2
4765014	24ACC636A**30	CNPH*4221A**	59*P5A080E17**16	33,000	12.7	15.5
4138354	24ACC636A**30	CNPH*4221A**	OVLAAB036098	33,000	12.0	14.5
4138356	24ACC636A**30	CNPH*4221A**	OVLAAB048112	33,400	12.5	15.0
4138353	24ACC636A**30	CNPH*4221A**	OVMAAB036098	33,000	12.0	14.5
4138355	24ACC636A**30	CNPH*4221A**	OVMAAB042112	33,200	12.5	15.0
3656033	24ACC636A**30	CNPH*4221A**+TDR		33,400	11.5	14.0
4138311	24ACC636A**30	CNPH*4321A**	58HDV040−−12	34,000	12.0	15.0
4138312	24ACC636A**30	CNPH*4321A**	58HDV060−−12	34,400	12.5	15.0
4138313	24ACC636A**30	CNPH*4321A**	58HDV080−−20	34,800	13.0	15.5
4138314	24ACC636A**30	CNPH*4321A**	58HDV100−−20	34,600	13.0	16.0
4765015	24ACC636A**30	CNPH*4321A**	59*N*A060V17**14	33,600	12.7	15.5
4765016	24ACC636A**30	CNPH*4321A**	59*N*A080V17**14	33,800	13.0	16.0
4765017	24ACC636A**30	CNPH*4321A**	59*N*A100V21**20	34,000	13.0	16.0
4765018	24ACC636A**30	CNPH*4321A**	59*N*A120V24**22	34,000	13.0	16.0
4765019	24ACC636A**30	CNPH*4321A**	59*P5A060E17**14	34,200	12.7	15.5
4765020	24ACC636A**30	CNPH*4321A**	59*P5A080E17**16	34,000	13.0	16.0
4138358	24ACC636A**30	CNPH*4321A**	OVLAAB036098	33,800	12.5	15.5
4138360	24ACC636A**30	CNPH*4321A**	OVLAAB048112	34,200	12.5	15.5
4138357	24ACC636A**30	CNPH*4321A**	OVMAAB036098	34,000	12.5	15.0
4138359	24ACC636A**30	CNPH*4321A**	OVMAAB042112	34,200	13.0	16.0
4138369	24ACC636A**30	CNPH*4321A**+TDR		34,400	12.0	14.5
3656064	24ACC636A**30	CNPH*4821A**	58CV(A,X)070−12	33,600	12.5	15.5
3656066	24ACC636A**30	CNPH*4821A**	58CV(A,X)090−16	33,600	13.0	16.0
3656069	24ACC636A**30	CNPH*4821A**	58CV(A,X)110−20	33,800	13.0	16.0
3656072	24ACC636A**30	CNPH*4821A**	58CV(A,X)135−22	33,800	13.0	16.0
3656075	24ACC636A**30	CNPH*4821A**	58CV(A,X)155−22	33,800	13.0	16.0
3656078	24ACC636A**30	CNPH*4821A**	58ME(B,C)060−12	34,200	13.0	16.0
3656080	24ACC636A**30	CNPH*4821A**	58ME(B,C)080−12	34,000	13.0	16.0
3656082	24ACC636A**30	CNPH*4821A**	58ME(B,C)080−16	34,200	13.0	16.0
3656085	24ACC636A**30	CNPH*4821A**	58ME(B,C)100−20	34,000	13.0	16.0
3656090	24ACC636A**30	CNPH*4821A**	58MEB040−12	34,000	13.0	16.0
3656092	24ACC636A**30	CNPH*4821A**	58MV(B,C)060−14	33,800	13.0	16.0
3656094	24ACC636A**30	CNPH*4821A**	58MV(B,C)080−14	33,800	12.5	15.5
3656096	24ACC636A**30	CNPH*4821A**	58MV(B,C)080−20	33,600	13.0	16.0
3656099	24ACC636A**30	CNPH*4821A**	58MV(B,C)100−20	33,800	13.0	16.0
3656102	24ACC636A**30	CNPH*4821A**	58MV(B,C)120−20	33,800	13.0	16.0
3656105	24ACC636A**30	CNPH*4821A**	58MVB040−14	33,600	12.5	15.5
3656107	24ACC636A**30	CNPH*4821A**	58PH*045−08	33,800	12.0	15.0
3656108	24ACC636A**30	CNPH*4821A**	58PH*070−16	33,800	12.5	15.0
3656110	24ACC636A**30	CNPH*4821A**	58PH*090−16	34,000	13.0	16.0
3656113	24ACC636A**30	CNPH*4821A**	58PH*110−20	34,200	13.0	16.0
3656118	24ACC636A**30	CNPH*4821A**	58VLR105−12	33,800	12.5	15.5
3656119	24ACC636A**30	CNPH*4821A**	58VLR120−20	33,800	13.0	16.0

See notes on page 46

COMBINATION RATINGS CONTINUED

AHRI Ref. No.	Model Number	Indoor Model	Furnace Model	Capacity	EER	SEER
3656122	24ACC636A**30	CNPH*4821A**	58VMR105−12	33,400	12.5	15.5
3656123	24ACC636A**30	CNPH*4821A**	58VMR120−20	33,600	13.0	16.0
3656139	24ACC636A**30	CNPH*4821A**+TDR		34,000	11.5	14.0
3656189	24ACC636A**30	CNPH*6024A**+TDR		34,200	12.0	14.5
3656312	24ACC636A**30	CNPV*3617A**	58CV(A,X)070−12	32,800	12.0	15.0
3656315	24ACC636A**30	CNPV*3617A**	58CV(A,X)090−16	32,800	12.0	15.0
4138289	24ACC636A**30	CNPV*3617A**	58HDV040−−12	32,600	11.5	14.0
4138290	24ACC636A**30	CNPV*3617A**	58HDV060−−12	32,800	12.0	14.5
3656318	24ACC636A**30	CNPV*3617A**	58ME(B,C)060−12	33,000	12.0	15.0
3656321	24ACC636A**30	CNPV*3617A**	58ME(B,C)080−12	33,000	12.0	15.0
3656323	24ACC636A**30	CNPV*3617A**	58ME(B,C)080−16	33,000	12.0	15.0
3656326	24ACC636A**30	CNPV*3617A**	58MEB040−12	33,000	12.0	15.0
3656329	24ACC636A**30	CNPV*3617A**	58MV(B,C)060−14	33,000	12.0	15.0
3656331	24ACC636A**30	CNPV*3617A**	58PH*045−08	32,800	11.5	14.5
3656333	24ACC636A**30	CNPV*3617A**	58PH*070−16	32,800	12.0	14.5
3656342	24ACC636A**30	CNPV*3617A**	58UVB060−14	33,000	12.0	15.0
3656336	24ACC636A**30	CNPV*3617A**	58VLR105−12	33,000	12.0	15.0
3656339	24ACC636A**30	CNPV*3617A**	58VMR105−12	32,600	12.0	15.0
4764979	24ACC636A**30	CNPV*3617A**	59*N*A060V17**14	30,000	12.3	15.0
4764980	24ACC636A**30	CNPV*3617A**	59*N*A080V17**14	30,000	12.5	15.2
4764981	24ACC636A**30	CNPV*3617A**	59*P5A060E17**14	32,800	12.3	15.0
4764982	24ACC636A**30	CNPV*3617A**	59*P5A080E17**16	30,000	12.5	15.2
4138332	24ACC636A**30	CNPV*3617A**	OVLAAB036098	32,600	12.0	14.5
4138331	24ACC636A**30	CNPV*3617A**	OVMAAB036098	32,800	12.0	14.5
4138333	24ACC636A**30	CNPV*3617A**	OVMAAB042112	32,800	12.0	15.0
3656345	24ACC636A**30	CNPV*3617A**+TDR		33,000	11.5	14.0
3656348	24ACC636A**30	CNPV*3621A**	58CV(A,X)090−16	32,800	12.5	15.0
3656351	24ACC636A**30	CNPV*3621A**	58CV(A,X)110−20	33,000	12.5	15.0
4138291	24ACC636A**30	CNPV*3621A**	58HDV040−−12	32,600	11.5	14.0
4138292	24ACC636A**30	CNPV*3621A**	58HDV060−−12	33,000	12.0	14.5
4138293	24ACC636A**30	CNPV*3621A**	58HDV080−−20	33,400	12.0	15.0
3656354	24ACC636A**30	CNPV*3621A**	58ME(B,C)060−12	33,000	12.0	15.0
3656357	24ACC636A**30	CNPV*3621A**	58ME(B,C)080−12	33,000	12.5	15.0
3656359	24ACC636A**30	CNPV*3621A**	58ME(B,C)080−16	33,000	12.0	15.0
3656360	24ACC636A**30	CNPV*3621A**	58ME(B,C)100−20	32,800	12.5	15.5
3656363	24ACC636A**30	CNPV*3621A**	58MEB040−12	33,000	12.5	15.0
3656366	24ACC636A**30	CNPV*3621A**	58MV(B,C)060−14	33,000	12.0	15.0
3656369	24ACC636A**30	CNPV*3621A**	58MV(B,C)080−14	32,800	12.0	15.0
3656372	24ACC636A**30	CNPV*3621A**	58MV(B,C)080−20	32,800	12.0	15.0
3656375	24ACC636A**30	CNPV*3621A**	58MV(B,C)100−20	33,000	12.0	15.0
3656377	24ACC636A**30	CNPV*3621A**	58PH*070−16	32,800	12.0	14.5
3656379	24ACC636A**30	CNPV*3621A**	58PH*090−16	33,000	12.5	15.5
3656380	24ACC636A**30	CNPV*3621A**	58PH*110−20	33,200	12.5	15.5
3656391	24ACC636A**30	CNPV*3621A**	58UVB060−14	33,000	12.0	15.0
3656394	24ACC636A**30	CNPV*3621A**	58UVB080−14	32,800	12.0	15.0
3656397	24ACC636A**30	CNPV*3621A**	58UVB080−20	32,800	12.0	15.0
3656400	24ACC636A**30	CNPV*3621A**	58UVB100−20	33,000	12.0	15.0
3656383	24ACC636A**30	CNPV*3621A**	58VLR105−12	33,000	12.0	15.0
3656384	24ACC636A**30	CNPV*3621A**	58VLR120−20	32,800	12.5	15.5
3656387	24ACC636A**30	CNPV*3621A**	58VMR105−12	32,600	12.0	15.0
3656388	24ACC636A**30	CNPV*3621A**	58VMR120−20	32,800	12.0	15.0
4764983	24ACC636A**30	CNPV*3621A**	59*N*A060V17**14	30,000	12.3	15.0
4764984	24ACC636A**30	CNPV*3621A**	59*N*A080V17**14	30,000	12.5	15.2
4764985	24ACC636A**30	CNPV*3621A**	59*N*A100V21**20	30,000	12.5	15.2
4764986	24ACC636A**30	CNPV*3621A**	59*P5A060E17**14	32,800	12.3	15.0
4764987	24ACC636A**30	CNPV*3621A**	59*P5A080E17**16	30,000	12.5	15.2
4138335	24ACC636A**30	CNPV*3621A**	OVLAAB036098	32,600	12.0	14.5
4138337	24ACC636A**30	CNPV*3621A**	OVLAAB048112	33,000	12.0	14.5
4138334	24ACC636A**30	CNPV*3621A**	OVMAAB036098	32,800	12.0	14.5
4138336	24ACC636A**30	CNPV*3621A**	OVMAAB042112	32,800	12.0	15.0
3656403	24ACC636A**30	CNPV*3621A**+TDR		33,000	11.5	13.5
3656404	24ACC636A**30	CNPV*3717A**	58CV(A,X)070−12	34,000	12.5	15.5
3656405	24ACC636A**30	CNPV*3717A**	58CV(A,X)090−16	34,000	13.0	16.0
4138294	24ACC636A**30	CNPV*3717A**	58HDV040−−12	34,000	12.0	15.0
4138295	24ACC636A**30	CNPV*3717A**	58HDV060−−12	34,200	12.5	15.0
3656406	24ACC636A**30	CNPV*3717A**	58ME(B,C)060−12	34,400	13.0	16.0
3656407	24ACC636A**30	CNPV*3717A**	58ME(B,C)080−12	34,200	13.0	16.0
3656408	24ACC636A**30	CNPV*3717A**	58ME(B,C)080−16	34,400	13.0	16.0
3656409	24ACC636A**30	CNPV*3717A**	58MEB040−12	34,400	13.0	16.0
3656410	24ACC636A**30	CNPV*3717A**	58MV(B,C)060−14	34,200	13.0	16.0
3656411	24ACC636A**30	CNPV*3717A**	58PH*045−08	34,000	12.0	15.0
3656412	24ACC636A**30	CNPV*3717A**	58PH*070−16	34,200	12.5	15.5

See notes on page 46

COMBINATION RATINGS CONTINUED

AHRI Ref. No.	Model Number	Indoor Model	Furnace Model	Capacity	EER	SEER
3656415	24ACC636A**30	CNPV*3717A**	58UVB060−14	34,200	13.0	16.0
3656413	24ACC636A**30	CNPV*3717A**	58VLR105−12	34,200	12.5	15.5
3656414	24ACC636A**30	CNPV*3717A**	58VMR105−12	33,800	12.5	15.5
4764988	24ACC636A**30	CNPV*3717A**	59*N*A060V17**14	33,600	12.7	15.5
4764989	24ACC636A**30	CNPV*3717A**	59*N*A080V17**14	33,800	13.0	16.0
4764990	24ACC636A**30	CNPV*3717A**	59*P5A060E17**14	34,000	12.7	15.5
4764991	24ACC636A**30	CNPV*3717A**	59*P5A080E17**16	34,000	13.0	16.0
4138339	24ACC636A**30	CNPV*3717A**	OVLAAB036098	33,800	12.5	15.0
4138338	24ACC636A**30	CNPV*3717A**	OVMAAB036098	34,000	12.5	15.0
4138340	24ACC636A**30	CNPV*3717A**	OVMAAB042112	34,000	12.5	15.5
3656418	24ACC636A**30	CNPV*4217A**	58CV(A,X)070−12	33,400	12.5	15.0
3656421	24ACC636A**30	CNPV*4217A**	58CV(A,X)090−16	33,400	12.5	15.5
4138296	24ACC636A**30	CNPV*4217A**	58HDV040−−12	33,200	12.0	14.5
4138297	24ACC636A**30	CNPV*4217A**	58HDV060−−12	33,600	12.0	15.0
3656424	24ACC636A**30	CNPV*4217A**	58ME(B,C)060−12	33,800	12.5	15.5
3656427	24ACC636A**30	CNPV*4217A**	58ME(B,C)080−12	33,600	12.5	15.5
3656430	24ACC636A**30	CNPV*4217A**	58ME(B,C)080−16	33,800	12.5	15.5
3656433	24ACC636A**30	CNPV*4217A**	58MEB040−12	33,600	12.5	15.5
3656436	24ACC636A**30	CNPV*4217A**	58MV(B,C)060−14	33,600	12.5	15.5
3656438	24ACC636A**30	CNPV*4217A**	58PH*045−08	33,400	11.5	14.5
3656440	24ACC636A**30	CNPV*4217A**	58PH*070−16	33,400	12.0	15.0
3656447	24ACC636A**30	CNPV*4217A**	58UVB060−14	33,600	12.5	15.5
3656443	24ACC636A**30	CNPV*4217A**	58VLR105−12	33,600	12.5	15.0
3656445	24ACC636A**30	CNPV*4217A**	58VMR105−12	33,200	12.5	15.0
4764992	24ACC636A**30	CNPV*4217A**	59*N*A060V17**14	33,000	12.6	15.5
4764993	24ACC636A**30	CNPV*4217A**	59*N*A080V17**14	33,200	12.7	15.5
4764994	24ACC636A**30	CNPV*4217A**	59*P5A060E17**14	33,400	12.5	15.2
4764995	24ACC636A**30	CNPV*4217A**	59*P5A080E17**16	33,200	12.7	15.5
4138342	24ACC636A**30	CNPV*4217A**	OVLAAB036098	33,200	12.0	15.0
4138341	24ACC636A**30	CNPV*4217A**	OVMAAB036098	33,400	12.0	15.0
4138343	24ACC636A**30	CNPV*4217A**	OVMAAB042112	33,400	12.5	15.5
3656450	24ACC636A**30	CNPV*4217A**+TDR		33,800	11.5	14.0
3656453	24ACC636A**30	CNPV*4221A**	58CV(A,X)090−16	33,200	12.5	15.5
3656456	24ACC636A**30	CNPV*4221A**	58CV(A,X)110−20	33,200	12.5	15.5
4138298	24ACC636A**30	CNPV*4221A**	58HDV040−−12	33,000	12.0	14.5
4138299	24ACC636A**30	CNPV*4221A**	58HDV060−−12	33,400	12.0	14.5
4138300	24ACC636A**30	CNPV*4221A**	58HDV080−−20	33,800	12.5	15.0
3656459	24ACC636A**30	CNPV*4221A**	58ME(B,C)060−12	33,400	12.5	15.5
3656462	24ACC636A**30	CNPV*4221A**	58ME(B,C)080−12	33,400	12.5	15.5
3656465	24ACC636A**30	CNPV*4221A**	58ME(B,C)080−16	33,400	12.5	15.5
3656467	24ACC636A**30	CNPV*4221A**	58ME(B,C)100−20	33,200	13.0	16.0
3656470	24ACC636A**30	CNPV*4221A**	58MEB040−12	33,400	12.5	15.5
3656473	24ACC636A**30	CNPV*4221A**	58MV(B,C)060−14	33,400	12.5	15.0
3656476	24ACC636A**30	CNPV*4221A**	58MV(B,C)080−14	33,200	12.0	15.0
3656479	24ACC636A**30	CNPV*4221A**	58MV(B,C)080−20	33,200	12.5	15.0
3656482	24ACC636A**30	CNPV*4221A**	58MV(B,C)100−20	33,200	12.5	15.5
3656485	24ACC636A**30	CNPV*4221A**	58PH*070−16	33,200	12.0	14.5
3656488	24ACC636A**30	CNPV*4221A**	58PH*090−16	33,400	12.5	15.5
3656490	24ACC636A**30	CNPV*4221A**	58PH*110−20	33,600	13.0	16.0
3656501	24ACC636A**30	CNPV*4221A**	58UVB060−14	33,400	12.5	15.0
3656504	24ACC636A**30	CNPV*4221A**	58UVB080−14	33,200	12.0	15.0
3656507	24ACC636A**30	CNPV*4221A**	58UVB080−20	33,200	12.5	15.0
3656510	24ACC636A**30	CNPV*4221A**	58UVB100−20	33,200	12.5	15.5
3656493	24ACC636A**30	CNPV*4221A**	58VLR105−12	33,400	12.0	15.0
3656494	24ACC636A**30	CNPV*4221A**	58VLR120−20	33,200	12.5	15.5
3656497	24ACC636A**30	CNPV*4221A**	58VMR105−12	33,000	12.0	15.0
3656498	24ACC636A**30	CNPV*4221A**	58VMR120−20	33,200	12.5	15.5
4764996	24ACC636A**30	CNPV*4221A**	59*N*A060V17**14	32,800	12.5	15.2
4764997	24ACC636A**30	CNPV*4221A**	59*N*A080V17**14	32,800	12.7	15.5
4764998	24ACC636A**30	CNPV*4221A**	59*N*A100V21**20	33,000	12.7	15.5
4764999	24ACC636A**30	CNPV*4221A**	59*P5A060E17**14	33,200	12.5	15.2
4765000	24ACC636A**30	CNPV*4221A**	59*P5A080E17**16	33,000	12.7	15.5
4138345	24ACC636A**30	CNPV*4221A**	OVLAAB036098	33,000	12.0	14.5
4138347	24ACC636A**30	CNPV*4221A**	OVLAAB048112	33,400	12.5	15.0
4138344	24ACC636A**30	CNPV*4221A**	OVMAAB036098	33,000	12.0	14.5
4138346	24ACC636A**30	CNPV*4221A**	OVMAAB042112	33,200	12.5	15.0
3656513	24ACC636A**30	CNPV*4221A**+TDR		33,400	11.5	14.0
4138301	24ACC636A**30	CNPV*4324A**	58HDV080−−20	34,800	13.0	15.5
4138302	24ACC636A**30	CNPV*4324A**	58HDV100−−20	34,600	13.0	16.0
4765001	24ACC636A**30	CNPV*4324A**	59*N*A100V21**20	34,000	13.0	16.0
4765002	24ACC636A**30	CNPV*4324A**	59*N*A120V24**22	34,000	13.2	16.5
4138348	24ACC636A**30	CNPV*4324A**	OVLAAB048112	34,400	13.0	16.0

See notes on page 46

COMBINATION RATINGS CONTINUED

AHRI Ref. No.	Model Number	Indoor Model	Furnace Model	Capacity	EER	SEER
3656535	24ACC636A**30	CNPV*4821A**	58CV(A,X)090−16	33,600	13.0	16.0
3656538	24ACC636A**30	CNPV*4821A**	58CV(A,X)110−20	33,800	13.0	16.0
3656541	24ACC636A**30	CNPV*4821A**	58ME(B,C)060−12	34,200	13.0	16.0
3656543	24ACC636A**30	CNPV*4821A**	58ME(B,C)080−12	34,000	13.0	16.0
3656545	24ACC636A**30	CNPV*4821A**	58ME(B,C)080−16	34,200	13.0	16.0
3656548	24ACC636A**30	CNPV*4821A**	58ME(B,C)100−20	34,000	13.0	16.0
3656551	24ACC636A**30	CNPV*4821A**	58MEB040−12	34,000	13.0	16.0
3656553	24ACC636A**30	CNPV*4821A**	58MV(B,C)060−14	33,800	13.0	16.0
3656555	24ACC636A**30	CNPV*4821A**	58MV(B,C)080−14	33,800	12.5	15.5
3656557	24ACC636A**30	CNPV*4821A**	58MV(B,C)080−20	33,600	13.0	16.0
3656560	24ACC636A**30	CNPV*4821A**	58MV(B,C)100−20	33,800	13.0	16.0
3656563	24ACC636A**30	CNPV*4821A**	58PH*070−16	33,800	12.5	15.0
3656565	24ACC636A**30	CNPV*4821A**	58PH*090−16	34,000	13.0	16.0
3656568	24ACC636A**30	CNPV*4821A**	58PH*110−20	34,200	13.0	16.0
3656579	24ACC636A**30	CNPV*4821A**	58UVB060−14	33,800	13.0	16.0
3656581	24ACC636A**30	CNPV*4821A**	58UVB080−14	33,800	12.5	15.5
3656583	24ACC636A**30	CNPV*4821A**	58UVB080−20	33,600	13.0	16.0
3656586	24ACC636A**30	CNPV*4821A**	58UVB100−20	33,800	13.0	16.0
3656571	24ACC636A**30	CNPV*4821A**	58VLR105−12	33,800	12.5	15.5
3656572	24ACC636A**30	CNPV*4821A**	58VLR120−20	33,800	13.0	16.0
3656575	24ACC636A**30	CNPV*4821A**	58VMR105−12	33,400	12.5	15.5
3656576	24ACC636A**30	CNPV*4821A**	58VMR120−20	33,600	13.0	16.0
3656589	24ACC636A**30	CNPV*4821A**+TDR		34,000	11.5	14.0
3656592	24ACC636A**30	CNPV*4824A**	58CV(A,X)110−20	33,800	13.0	16.0
3656595	24ACC636A**30	CNPV*4824A**	58CV(A,X)135−22	33,800	13.0	16.0
3656598	24ACC636A**30	CNPV*4824A**	58CV(A,X)155−22	33,800	13.0	16.0
3656601	24ACC636A**30	CNPV*4824A**	58ME(B,C)100−20	34,000	13.0	16.0
3656606	24ACC636A**30	CNPV*4824A**	58MV(B,C)080−14	33,800	12.5	15.5
3656608	24ACC636A**30	CNPV*4824A**	58MV(B,C)080−20	33,600	13.0	16.0
3656611	24ACC636A**30	CNPV*4824A**	58MV(B,C)100−20	33,800	13.0	16.0
3656614	24ACC636A**30	CNPV*4824A**	58MV(B,C)120−20	33,800	13.0	16.0
3656617	24ACC636A**30	CNPV*4824A**	58MVB040−14	33,600	12.5	15.5
3656619	24ACC636A**30	CNPV*4824A**	58PH*090−16	34,000	13.0	16.0
3656622	24ACC636A**30	CNPV*4824A**	58PH*110−20	34,200	13.0	16.0
3656633	24ACC636A**30	CNPV*4824A**	58UVB080−14	33,800	12.5	15.5
3656635	24ACC636A**30	CNPV*4824A**	58UVB080−20	33,600	13.0	16.0
3656638	24ACC636A**30	CNPV*4824A**	58UVB100−20	33,800	13.0	16.0
3656641	24ACC636A**30	CNPV*4824A**	58UVB120−20	33,800	13.0	16.0
3656627	24ACC636A**30	CNPV*4824A**	58VLR120−20	33,800	13.0	16.0
3656630	24ACC636A**30	CNPV*4824A**	58VMR120−20	33,600	13.0	16.0
3656644	24ACC636A**30	CNPV*4824A**+TDR		34,000	11.5	14.0
3656773	24ACC636A**30	CSPH*3612A**	58CV(A,X)070−12	33,400	12.5	15.5
3656776	24ACC636A**30	CSPH*3612A**	58CV(A,X)090−16	33,600	13.0	16.0
3656779	24ACC636A**30	CSPH*3612A**	58CV(A,X)110−20	33,600	13.0	16.0
3656782	24ACC636A**30	CSPH*3612A**	58CV(A,X)135−22	33,600	13.0	16.0
3656785	24ACC636A**30	CSPH*3612A**	58CV(A,X)155−22	33,800	13.0	16.0
3656787	24ACC636A**30	CSPH*3612A**	58HDV040−−12	33,400	12.0	14.5
3656789	24ACC636A**30	CSPH*3612A**	58HDV060−−12	33,800	12.0	15.0
3656790	24ACC636A**30	CSPH*3612A**	58HDV080−−20	34,200	12.5	15.0
3656791	24ACC636A**30	CSPH*3612A**	58HDV100−−20	34,000	12.5	15.5
3656794	24ACC636A**30	CSPH*3612A**	58ME(B,C)060−12	33,800	12.5	15.5
3656797	24ACC636A**30	CSPH*3612A**	58ME(B,C)080−12	33,800	13.0	16.0
3656799	24ACC636A**30	CSPH*3612A**	58ME(B,C)080−16	33,800	12.5	15.5
3656800	24ACC636A**30	CSPH*3612A**	58ME(B,C)100−20	33,800	13.0	16.0
3656803	24ACC636A**30	CSPH*3612A**	58MEB040−12	33,800	13.0	16.0
3656806	24ACC636A**30	CSPH*3612A**	58MV(B,C)060−14	33,800	12.5	15.5
3656809	24ACC636A**30	CSPH*3612A**	58MV(B,C)080−14	33,600	12.5	15.0
3656812	24ACC636A**30	CSPH*3612A**	58MV(B,C)080−20	33,600	12.5	15.5
3656815	24ACC636A**30	CSPH*3612A**	58MV(B,C)100−20	33,800	12.5	15.5
3656818	24ACC636A**30	CSPH*3612A**	58MV(B,C)120−20	33,600	13.0	16.0
3656821	24ACC636A**30	CSPH*3612A**	58MVB040−14	33,400	12.5	15.0
3656823	24ACC636A**30	CSPH*3612A**	58PH*045−08	33,600	12.0	14.5
3656825	24ACC636A**30	CSPH*3612A**	58PH*070−16	33,600	12.0	15.0
3656827	24ACC636A**30	CSPH*3612A**	58PH*090−16	33,800	13.0	16.0
3656828	24ACC636A**30	CSPH*3612A**	58PH*110−20	34,000	13.0	16.0
3656831	24ACC636A**30	CSPH*3612A**	58VLR105−12	33,800	12.5	15.5
3656832	24ACC636A**30	CSPH*3612A**	58VLR120−20	33,600	13.0	16.0
3656835	24ACC636A**30	CSPH*3612A**	58VMR105−12	33,400	12.5	15.5
3656836	24ACC636A**30	CSPH*3612A**	58VMR120−20	33,600	12.5	15.5
4765021	24ACC636A**30	CSPH*3612A**	59*N*A060V17**14	33,200	12.6	15.5
4765022	24ACC636A**30	CSPH*3612A**	59*N*A080V17**14	33,200	12.7	15.5
4765023	24ACC636A**30	CSPH*3612A**	59*N*A100V21**20	33,400	12.7	15.5

See notes on page 46

COMBINATION RATINGS CONTINUED

AHRI Ref. No.	Model Number	Indoor Model	Furnace Model	Capacity	EER	SEER
4765024	24ACC636A**30	CSPH*3612A**	59*N*A120V24**22	33,400	13.0	16.0
4765025	24ACC636A**30	CSPH*3612A**	59*P5A060E17**14	33,600	12.6	15.5
4765026	24ACC636A**30	CSPH*3612A**	59*P5A080E17**16	33,400	12.7	15.5
4138362	24ACC636A**30	CSPH*3612A**	OVLAAB036098	33,400	12.5	15.0
4138364	24ACC636A**30	CSPH*3612A**	OVLAAB048112	33,800	12.5	15.0
4138361	24ACC636A**30	CSPH*3612A**	OVMAAB036098	33,400	12.0	15.0
4138363	24ACC636A**30	CSPH*3612A**	OVMAAB042112	33,600	12.5	15.5
3656854	24ACC636A**30	CSPH*3612A**+TDR		33,800	11.5	14.0
3656856	24ACC636A**30	CSPH*4212A**	58CV(A,X)070−12	33,600	12.5	15.5
3656859	24ACC636A**30	CSPH*4212A**	58CV(A,X)090−16	33,800	13.0	16.0
3656862	24ACC636A**30	CSPH*4212A**	58CV(A,X)110−20	33,800	13.0	16.0
3656865	24ACC636A**30	CSPH*4212A**	58CV(A,X)135−22	33,800	13.0	16.0
3656868	24ACC636A**30	CSPH*4212A**	58CV(A,X)155−22	34,000	13.0	16.0
3656870	24ACC636A**30	CSPH*4212A**	58HDV040−−12	33,600	12.0	14.5
3656871	24ACC636A**30	CSPH*4212A**	58HDV060−−12	34,000	12.0	15.0
3656872	24ACC636A**30	CSPH*4212A**	58HDV080−−20	34,400	12.5	15.0
3656874	24ACC636A**30	CSPH*4212A**	58HDV100−−20	34,200	13.0	16.0
3656877	24ACC636A**30	CSPH*4212A**	58ME(B,C)060−12	34,200	13.0	16.0
3656880	24ACC636A**30	CSPH*4212A**	58ME(B,C)080−12	34,000	13.0	16.0
3656883	24ACC636A**30	CSPH*4212A**	58ME(B,C)080−16	34,200	13.0	16.0
3656885	24ACC636A**30	CSPH*4212A**	58ME(B,C)100−20	34,000	13.0	16.0
3656889	24ACC636A**30	CSPH*4212A**	58MEB040−12	34,000	13.0	16.0
3656892	24ACC636A**30	CSPH*4212A**	58MV(B,C)060−14	34,000	13.0	16.0
3656895	24ACC636A**30	CSPH*4212A**	58MV(B,C)080−14	33,800	12.5	15.5
3656898	24ACC636A**30	CSPH*4212A**	58MV(B,C)080−20	33,800	13.0	16.0
3656901	24ACC636A**30	CSPH*4212A**	58MV(B,C)100−20	33,800	13.0	16.0
3656904	24ACC636A**30	CSPH*4212A**	58MV(B,C)120−20	33,800	13.0	16.0
3656907	24ACC636A**30	CSPH*4212A**	58MVB040−14	33,600	12.5	15.5
3656909	24ACC636A**30	CSPH*4212A**	58PH*045−08	33,800	12.0	15.0
3656911	24ACC636A**30	CSPH*4212A**	58PH*070−16	33,800	12.5	15.0
3656914	24ACC636A**30	CSPH*4212A**	58PH*090−16	34,000	13.0	16.0
3656916	24ACC636A**30	CSPH*4212A**	58PH*110−20	34,200	13.0	16.0
3656920	24ACC636A**30	CSPH*4212A**	58VLR105−12	34,000	12.5	15.5
3656921	24ACC636A**30	CSPH*4212A**	58VLR120−20	33,800	13.0	16.0
3656924	24ACC636A**30	CSPH*4212A**	58VMR105−12	33,600	12.5	15.5
3656925	24ACC636A**30	CSPH*4212A**	58VMR120−20	33,800	12.5	15.5
4765027	24ACC636A**30	CSPH*4212A**	59*N*A060V17**14	33,400	12.7	15.5
4765028	24ACC636A**30	CSPH*4212A**	59*N*A080V17**14	33,400	12.7	15.5
4765029	24ACC636A**30	CSPH*4212A**	59*N*A100V21**20	33,600	13.0	16.0
4765030	24ACC636A**30	CSPH*4212A**	59*N*A120V24**22	33,600	13.0	16.0
4765031	24ACC636A**30	CSPH*4212A**	59*P5A060E17**14	33,800	12.7	15.5
4765032	24ACC636A**30	CSPH*4212A**	59*P5A080E17**16	33,600	12.7	15.5
4138366	24ACC636A**30	CSPH*4212A**	OVLAAB036098	33,600	12.5	15.0
4138368	24ACC636A**30	CSPH*4212A**	OVLAAB048112	34,000	12.5	15.5
4138365	24ACC636A**30	CSPH*4212A**	OVMAAB036098	33,600	12.5	15.0
4138367	24ACC636A**30	CSPH*4212A**	OVMAAB042112	33,800	12.5	15.5
3656943	24ACC636A**30	CSPH*4212A**+TDR		34,000	11.5	14.0
3656945	24ACC636A**30	CSPH*4812A**	58CV(A,X)070−12	33,800	12.5	15.5
3656947	24ACC636A**30	CSPH*4812A**	58CV(A,X)090−16	33,800	13.0	16.0
3656950	24ACC636A**30	CSPH*4812A**	58CV(A,X)110−20	34,000	13.0	16.0
3656953	24ACC636A**30	CSPH*4812A**	58CV(A,X)135−22	34,000	13.0	16.0
3656956	24ACC636A**30	CSPH*4812A**	58CV(A,X)155−22	34,000	13.0	16.0
3656963	24ACC636A**30	CSPH*4812A**	58ME(B,C)060−12	34,200	13.0	16.0
3656965	24ACC636A**30	CSPH*4812A**	58ME(B,C)080−12	34,200	13.0	16.0
3656967	24ACC636A**30	CSPH*4812A**	58ME(B,C)080−16	34,200	13.0	16.0
3656970	24ACC636A**30	CSPH*4812A**	58ME(B,C)100−20	34,000	13.0	16.0
3656975	24ACC636A**30	CSPH*4812A**	58MEB040−12	34,200	13.0	16.0
3656977	24ACC636A**30	CSPH*4812A**	58MV(B,C)060−14	34,000	13.0	16.0
3656979	24ACC636A**30	CSPH*4812A**	58MV(B,C)080−14	34,000	12.5	15.5
3656981	24ACC636A**30	CSPH*4812A**	58MV(B,C)080−20	33,800	13.0	16.0
3656984	24ACC636A**30	CSPH*4812A**	58MV(B,C)100−20	34,000	13.0	16.0
3656987	24ACC636A**30	CSPH*4812A**	58MV(B,C)120−20	34,000	13.0	16.0
3656990	24ACC636A**30	CSPH*4812A**	58MVB040−14	33,800	12.5	15.5
3656992	24ACC636A**30	CSPH*4812A**	58PH*045−08	34,000	12.0	15.0
3656993	24ACC636A**30	CSPH*4812A**	58PH*070−16	34,000	12.5	15.0
3656995	24ACC636A**30	CSPH*4812A**	58PH*090−16	34,200	13.0	16.0
3656998	24ACC636A**30	CSPH*4812A**	58PH*110−20	34,400	13.0	16.0
3657003	24ACC636A**30	CSPH*4812A**	58VLR105−12	34,000	12.5	15.5
3657004	24ACC636A**30	CSPH*4812A**	58VLR120−20	34,000	13.0	16.0
3657007	24ACC636A**30	CSPH*4812A**	58VMR105−12	33,600	12.5	15.5
3657008	24ACC636A**30	CSPH*4812A**	58VMR120−20	33,800	13.0	16.0
3657024	24ACC636A**30	CSPH*4812A**+TDR		34,200	11.5	14.0

See notes on page 46

COMBINATION RATINGS CONTINUED

AHRI Ref. No.	Model Number	Indoor Model	Furnace Model	Capacity	EER	SEER
3804428	24ACC636A**30	FB4CNF036		33,000	11.5	13.5
3693334	24ACC636A**30	FB4CNF036+TXV		33,000	12.0	14.5
3804429	24ACC636A**30	FB4CNF042		34,200	12.0	14.5
3693335	24ACC636A**30	FB4CNF042+TXV		34,200	12.5	15.5
3657079	24ACC636A**30	FE4AN(B,F)003+UI		33,200	13.0	16.0
3657082	24ACC636A**30	FE4AN(B,F)005+UI		34,200	13.0	16.0
3657085	24ACC636A**30	FE4ANB006+UI		34,600	13.5	16.5
3657091	24ACC636A**30	FE4ANF002+UI		33,000	12.0	15.0
3657093	24ACC636A**30	FE5ANB004+UI		34,600	13.5	16.5
3657107	24ACC636A**30	FF1ENP036		33,000	11.0	13.5
3657110	24ACC636A**30	FF1ENP037		33,200	11.5	14.0
3657128	24ACC636A**30	FV4CN(B,F)003		33,200	13.0	16.0
3657131	24ACC636A**30	FV4CN(B,F)005		34,200	13.0	16.0
3657134	24ACC636A**30	FV4CNB006		34,600	13.5	16.5
3657140	24ACC636A**30	FV4CNF002		33,000	12.0	15.0
3657160	24ACC636A**30	FX4DN(B,F)037		34,200	13.0	15.5
3657161	24ACC636A**30	FX4DN(B,F)043		34,200	13.0	15.5
3657163	24ACC636A**30	FX4DN(B,F)049		34,800	13.0	16.0
3804430	24ACC636A**30	FY5BNF036		33,200	11.5	13.5
3693342	24ACC636A**30	FY5BNF036+TXV		33,400	11.5	14.0
3804431	24ACC636A**30	FY5BNF042		33,800	11.5	13.5
3693343	24ACC636A**30	FY5BNF042+TXV		33,800	12.0	14.5
3656534	24ACC642A**30	†CNPV*4324A**+TDR		41,500	12.0	14.5
3655398	24ACC642A**30	CAP**4221A**	58CV(A,X)090–16	39,500	13.0	15.2
3655401	24ACC642A**30	CAP**4221A**	58CV(A,X)110–20	40,000	13.0	15.2
3655404	24ACC642A**30	CAP**4221A**	58ME(B,C)060–12	40,000	12.5	15.0
3655407	24ACC642A**30	CAP**4221A**	58ME(B,C)080–12	40,000	12.5	15.0
3655410	24ACC642A**30	CAP**4221A**	58ME(B,C)080–16	40,000	12.5	15.0
3655412	24ACC642A**30	CAP**4221A**	58ME(B,C)100–20	40,000	13.0	15.5
3655415	24ACC642A**30	CAP**4221A**	58MEB040–12	40,000	12.5	15.0
3655418	24ACC642A**30	CAP**4221A**	58MV(B,C)060–14	40,000	12.5	15.0
3655421	24ACC642A**30	CAP**4221A**	58MV(B,C)080–14	39,500	12.5	14.5
3655424	24ACC642A**30	CAP**4221A**	58MV(B,C)080–20	39,500	12.5	15.0
3655427	24ACC642A**30	CAP**4221A**	58MV(B,C)100–20	39,500	12.5	15.0
3655430	24ACC642A**30	CAP**4221A**	58PH*070–16	39,500	12.0	14.5
3655433	24ACC642A**30	CAP**4221A**	58PH*090–16	40,000	13.0	15.2
3655435	24ACC642A**30	CAP**4221A**	58PH*110–20	40,000	13.0	15.5
3655446	24ACC642A**30	CAP**4221A**	58UVB060–14	40,000	12.5	15.0
3655449	24ACC642A**30	CAP**4221A**	58UVB080–14	39,500	12.5	14.5
3655452	24ACC642A**30	CAP**4221A**	58UVB080–20	39,500	12.5	15.0
3655455	24ACC642A**30	CAP**4221A**	58UVB100–20	39,500	12.5	15.0
3655439	24ACC642A**30	CAP**4221A**	58VLR120–20	39,500	13.0	15.5
3655443	24ACC642A**30	CAP**4221A**	58VMR120–20	39,500	12.5	15.0
4765033	24ACC642A**30	CAP**4221A**	59*N*A060V17**14	39,500	12.5	15.0
4765034	24ACC642A**30	CAP**4221A**	59*N*A080V17**14	39,500	12.5	15.2
4765035	24ACC642A**30	CAP**4221A**	59*N*A100V21**20	40,000	12.5	15.2
4765036	24ACC642A**30	CAP**4221A**	59*P5A060E17**14	40,000	12.0	14.5
4765037	24ACC642A**30	CAP**4221A**	59*P5A080E17**16	40,000	12.5	15.0
4765038	24ACC642A**30	CAP**4221A**	59*P5A100E21**16	40,000	12.5	15.2
4138383	24ACC642A**30	CAP**4221A**	OVLAAB048112	40,000	12.5	14.5
4138382	24ACC642A**30	CAP**4221A**	OVMAAB042112	40,000	12.5	15.0
3655458	24ACC642A**30	CAP**4221A**+TDR		40,000	11.5	14.0
3655461	24ACC642A**30	CAP**4224A**	58CV(A,X)110–20	40,000	13.0	15.5
3655464	24ACC642A**30	CAP**4224A**	58CV(A,X)135–22	40,000	13.0	15.5
3655467	24ACC642A**30	CAP**4224A**	58CV(A,X)155–22	40,000	13.0	16.0
3655469	24ACC642A**30	CAP**4224A**	58ME(B,C)100–20	40,000	13.0	15.5
3655470	24ACC642A**30	CAP**4224A**	58ME(B,C)120–20	40,000	13.0	15.5
3655473	24ACC642A**30	CAP**4224A**	58MV(B,C)080–14	39,500	12.5	15.0
3655476	24ACC642A**30	CAP**4224A**	58MV(B,C)080–20	39,500	12.5	15.0
3655479	24ACC642A**30	CAP**4224A**	58MV(B,C)100–20	39,500	12.5	15.0
3655482	24ACC642A**30	CAP**4224A**	58MV(B,C)120–20	39,500	13.0	15.2
3655485	24ACC642A**30	CAP**4224A**	58MVB040–14	39,500	12.5	15.0
3655488	24ACC642A**30	CAP**4224A**	58PH*090–16	40,000	13.0	15.5
3655490	24ACC642A**30	CAP**4224A**	58PH*110–20	40,000	13.0	15.5
3655491	24ACC642A**30	CAP**4224A**	58PH*135–20	40,000	13.0	15.5
3655498	24ACC642A**30	CAP**4224A**	58UVB080–14	39,500	12.5	15.0
3655501	24ACC642A**30	CAP**4224A**	58UVB080–20	39,500	12.5	15.0
3655504	24ACC642A**30	CAP**4224A**	58UVB100–20	39,500	12.5	15.0
3655507	24ACC642A**30	CAP**4224A**	58UVB120–20	39,500	13.0	15.2
3655493	24ACC642A**30	CAP**4224A**	58VLR120–20	39,500	13.0	15.5
3655495	24ACC642A**30	CAP**4224A**	58VMR120–20	39,500	12.5	15.0

See notes on page 46

COMBINATION RATINGS CONTINUED

AHRI Ref. No.	Model Number	Indoor Model	Furnace Model	Capacity	EER	SEER
4765039	24ACC642A**30	CAP**4224A**	59*N*A100V21**20	40,000	12.7	15.5
4765040	24ACC642A**30	CAP**4224A**	59*N*A120V24**22	40,000	12.7	15.5
4765041	24ACC642A**30	CAP**4224A**	59*P5A100E21**16	40,000	12.5	15.2
4765042	24ACC642A**30	CAP**4224A**	59*P5A120E24**22	40,500	12.7	15.5
4138384	24ACC642A**30	CAP**4224A**	OVLAAB048112	40,500	12.5	14.5
4138385	24ACC642A**30	CAP**4224A**	OVLAAB060154	41,000	12.5	15.0
3655510	24ACC642A**30	CAP**4224A**+TDR		40,000	11.5	14.0
3655512	24ACC642A**30	CAP**4817A**	58CV(A,X)070−12	40,500	12.5	15.0
3655514	24ACC642A**30	CAP**4817A**	58CV(A,X)090−16	40,500	13.0	15.5
3655517	24ACC642A**30	CAP**4817A**	58ME(B,C)060−12	41,000	13.0	15.2
3655519	24ACC642A**30	CAP**4817A**	58ME(B,C)080−12	41,000	13.0	15.5
3655521	24ACC642A**30	CAP**4817A**	58ME(B,C)080−16	40,500	13.0	15.5
3655524	24ACC642A**30	CAP**4817A**	58MEB040−12	41,000	13.0	15.2
3655526	24ACC642A**30	CAP**4817A**	58MV(B,C)060−14	41,000	13.0	15.2
3655529	24ACC642A**30	CAP**4817A**	58PH*070−16	40,500	12.0	14.5
3655533	24ACC642A**30	CAP**4817A**	58UVB060−14	41,000	13.0	15.2
4765043	24ACC642A**30	CAP**4817A**	59*N*A060V17**14	40,500	12.5	15.2
4765044	24ACC642A**30	CAP**4817A**	59*N*A080V17**14	40,500	12.5	15.2
4765045	24ACC642A**30	CAP**4817A**	59*P5A060E17**14	41,000	12.5	15.2
4765046	24ACC642A**30	CAP**4817A**	59*P5A080E17**16	41,000	12.5	15.2
4138386	24ACC642A**30	CAP**4817A**	OVMAAB042112	41,000	12.5	15.0
3655535	24ACC642A**30	CAP**4817A**+TDR		41,000	12.0	14.0
3655538	24ACC642A**30	CAP**4821A**	58CV(A,X)090−16	40,500	13.0	15.5
3655541	24ACC642A**30	CAP**4821A**	58CV(A,X)110−20	40,500	13.0	15.5
3655544	24ACC642A**30	CAP**4821A**	58ME(B,C)060−12	40,500	12.5	15.0
3655546	24ACC642A**30	CAP**4821A**	58ME(B,C)080−12	40,500	12.5	15.2
3655548	24ACC642A**30	CAP**4821A**	58ME(B,C)080−16	40,500	12.5	15.0
3655551	24ACC642A**30	CAP**4821A**	58ME(B,C)100−20	40,500	13.0	15.5
3655554	24ACC642A**30	CAP**4821A**	58MEB040−12	40,500	12.5	15.2
3655556	24ACC642A**30	CAP**4821A**	58MV(B,C)060−14	40,500	12.5	15.0
3655558	24ACC642A**30	CAP**4821A**	58MV(B,C)080−14	40,000	12.5	15.0
3655560	24ACC642A**30	CAP**4821A**	58MV(B,C)080−20	40,500	12.5	15.0
3655563	24ACC642A**30	CAP**4821A**	58MV(B,C)100−20	40,000	12.5	15.0
3655566	24ACC642A**30	CAP**4821A**	58PH*070−16	40,500	12.0	14.5
3655568	24ACC642A**30	CAP**4821A**	58PH*090−16	40,500	13.0	15.5
3655571	24ACC642A**30	CAP**4821A**	58PH*110−20	40,500	13.0	16.0
3655582	24ACC642A**30	CAP**4821A**	58UVB060−14	40,500	12.5	15.0
3655584	24ACC642A**30	CAP**4821A**	58UVB080−14	40,000	12.5	15.0
3655586	24ACC642A**30	CAP**4821A**	58UVB080−20	40,500	12.5	15.0
3655589	24ACC642A**30	CAP**4821A**	58UVB100−20	40,000	12.5	15.0
3655575	24ACC642A**30	CAP**4821A**	58VLR120−20	40,000	13.0	15.5
3655579	24ACC642A**30	CAP**4821A**	58VMR120−20	40,000	13.0	15.5
4765047	24ACC642A**30	CAP**4821A**	59*N*A060V17**14	40,000	12.5	15.0
4765048	24ACC642A**30	CAP**4821A**	59*N*A080V17**14	40,500	12.5	15.2
4765049	24ACC642A**30	CAP**4821A**	59*N*A100V21**20	40,500	12.7	15.5
4765050	24ACC642A**30	CAP**4821A**	59*P5A060E17**14	40,500	12.5	15.0
4765051	24ACC642A**30	CAP**4821A**	59*P5A080E17**16	41,000	12.5	15.2
4765052	24ACC642A**30	CAP**4821A**	59*P5A100E21**16	40,500	12.7	15.5
4138388	24ACC642A**30	CAP**4821A**	OVLAAB048112	41,000	12.5	14.5
4138387	24ACC642A**30	CAP**4821A**	OVMAAB042112	40,500	12.5	15.0
3655592	24ACC642A**30	CAP**4821A**+TDR		40,500	12.0	14.0
3655596	24ACC642A**30	CAP**4823A**	58HDV080−−20	40,500	12.5	15.0
4765057	24ACC642A**30	CAP**4823A**	59*N*A100V21**20	40,500	12.7	15.5
4765058	24ACC642A**30	CAP**4823A**	59*N*A120V24**22	40,500	12.7	15.5
4765059	24ACC642A**30	CAP**4823A**	59*P5A100E21**16	40,500	12.7	15.5
4765060	24ACC642A**30	CAP**4823A**	59*P5A120E24**22	41,000	12.7	15.5
4138391	24ACC642A**30	CAP**4823A**	OVLAAB048112	41,000	12.5	14.5
3655599	24ACC642A**30	CAP**4823A**+TDR		40,500	12.0	14.0
3655602	24ACC642A**30	CAP**4824A**	58CV(A,X)110−20	40,500	13.0	15.5
3655605	24ACC642A**30	CAP**4824A**	58CV(A,X)135−22	40,500	13.0	16.0
3655608	24ACC642A**30	CAP**4824A**	58CV(A,X)155−22	40,500	13.0	16.0
3655611	24ACC642A**30	CAP**4824A**	58ME(B,C)100−20	40,500	13.0	16.0
3655613	24ACC642A**30	CAP**4824A**	58ME(B,C)120−20	41,000	13.0	16.0
3655616	24ACC642A**30	CAP**4824A**	58MV(B,C)080−14	40,000	12.5	15.0
3655618	24ACC642A**30	CAP**4824A**	58MV(B,C)080−20	40,500	12.5	15.2
3655621	24ACC642A**30	CAP**4824A**	58MV(B,C)100−20	40,000	13.0	15.2
3655624	24ACC642A**30	CAP**4824A**	58MV(B,C)120−20	40,500	13.0	15.5
3655627	24ACC642A**30	CAP**4824A**	58MVB040−14	40,000	12.5	15.0
3655629	24ACC642A**30	CAP**4824A**	58PH*090−16	40,500	13.0	15.5
3655632	24ACC642A**30	CAP**4824A**	58PH*110−20	40,500	13.0	16.0
3655634	24ACC642A**30	CAP**4824A**	58PH*135−20	40,500	13.0	15.5
3655643	24ACC642A**30	CAP**4824A**	58UVB080−14	40,000	12.5	15.0

See notes on page 46

COMBINATION RATINGS CONTINUED

AHRI Ref. No.	Model Number	Indoor Model	Furnace Model	Capacity	EER	SEER
3655645	24ACC642A**30	CAP**4824A**	58UVB080−20	40,500	12.5	15.2
3655648	24ACC642A**30	CAP**4824A**	58UVB100−20	40,000	13.0	15.2
3655651	24ACC642A**30	CAP**4824A**	58UVB120−20	40,500	13.0	15.5
3655637	24ACC642A**30	CAP**4824A**	58VLR120−20	40,000	13.0	15.5
3655640	24ACC642A**30	CAP**4824A**	58VMR120−20	40,000	13.0	15.5
4765053	24ACC642A**30	CAP**4824A**	59*N*A100V21**20	40,500	12.7	15.5
4765054	24ACC642A**30	CAP**4824A**	59*N*A120V24**22	40,500	12.7	15.5
4765055	24ACC642A**30	CAP**4824A**	59*P5A100E21**16	40,500	12.7	15.5
4765056	24ACC642A**30	CAP**4824A**	59*P5A120E24**22	41,000	12.7	15.5
4138389	24ACC642A**30	CAP**4824A**	OVLAAB048112	41,000	12.5	15.0
4138390	24ACC642A**30	CAP**4824A**	OVLAAB060154	41,500	13.0	15.0
3655654	24ACC642A**30	CAP**4824A**+TDR		40,500	12.0	14.0
3655656	24ACC642A**30	CAP**6021A**	58CV(A,X)090−16	41,000	13.0	16.0
3655658	24ACC642A**30	CAP**6021A**	58CV(A,X)110−20	41,000	13.0	16.0
3655660	24ACC642A**30	CAP**6021A**	58ME(B,C)060−12	41,500	13.0	15.5
3655661	24ACC642A**30	CAP**6021A**	58ME(B,C)080−12	41,500	13.0	15.5
3655662	24ACC642A**30	CAP**6021A**	58ME(B,C)080−16	41,000	13.0	15.5
3655664	24ACC642A**30	CAP**6021A**	58ME(B,C)100−20	41,500	13.0	16.0
3655666	24ACC642A**30	CAP**6021A**	58MEB040−12	41,500	13.0	15.5
3655667	24ACC642A**30	CAP**6021A**	58MV(B,C)060−14	41,000	13.0	15.5
3655668	24ACC642A**30	CAP**6021A**	58MV(B,C)080−14	41,000	12.5	15.0
3655669	24ACC642A**30	CAP**6021A**	58MV(B,C)080−20	41,000	13.0	15.5
3655671	24ACC642A**30	CAP**6021A**	58MV(B,C)100−20	40,500	13.0	15.5
3655673	24ACC642A**30	CAP**6021A**	58PH*070−16	41,000	12.5	15.0
3655674	24ACC642A**30	CAP**6021A**	58PH*090−16	41,000	13.0	16.0
3655676	24ACC642A**30	CAP**6021A**	58PH*110−20	41,500	13.0	16.0
3655682	24ACC642A**30	CAP**6021A**	58UVB060−14	41,000	13.0	15.5
3655683	24ACC642A**30	CAP**6021A**	58UVB080−14	41,000	12.5	15.0
3655684	24ACC642A**30	CAP**6021A**	58UVB080−20	41,000	13.0	15.5
3655686	24ACC642A**30	CAP**6021A**	58UVB100−20	40,500	13.0	15.5
3655678	24ACC642A**30	CAP**6021A**	58VLR120−20	41,000	13.0	16.0
3655680	24ACC642A**30	CAP**6021A**	58VMR120−20	40,500	13.0	16.0
3655688	24ACC642A**30	CAP**6021A**+TDR		41,500	12.0	14.5
3655690	24ACC642A**30	CAP**6024A**	58CV(A,X)110−20	41,000	13.0	16.0
3655692	24ACC642A**30	CAP**6024A**	58CV(A,X)135−22	41,000	13.0	16.0
3655694	24ACC642A**30	CAP**6024A**	58CV(A,X)155−22	41,000	13.0	16.0
3655696	24ACC642A**30	CAP**6024A**	58ME(B,C)100−20	41,500	13.0	16.0
3655698	24ACC642A**30	CAP**6024A**	58ME(B,C)120−20	41,500	13.0	16.0
3655700	24ACC642A**30	CAP**6024A**	58MV(B,C)080−14	41,000	13.0	15.2
3655701	24ACC642A**30	CAP**6024A**	58MV(B,C)080−20	41,000	13.0	15.5
3655703	24ACC642A**30	CAP**6024A**	58MV(B,C)100−20	40,500	13.0	15.5
3655705	24ACC642A**30	CAP**6024A**	58MV(B,C)120−20	41,000	13.0	16.0
3655707	24ACC642A**30	CAP**6024A**	58MVB040−14	40,500	13.0	15.2
3655708	24ACC642A**30	CAP**6024A**	58PH*090−16	41,000	13.0	16.0
3655710	24ACC642A**30	CAP**6024A**	58PH*110−20	41,500	13.0	16.0
3655712	24ACC642A**30	CAP**6024A**	58PH*135−20	41,500	13.0	16.0
3655718	24ACC642A**30	CAP**6024A**	58UVB080−14	41,000	13.0	15.2
3655719	24ACC642A**30	CAP**6024A**	58UVB080−20	41,000	13.0	15.5
3655721	24ACC642A**30	CAP**6024A**	58UVB100−20	40,500	13.0	15.5
3655723	24ACC642A**30	CAP**6024A**	58UVB120−20	41,000	13.0	16.0
3655714	24ACC642A**30	CAP**6024A**	58VLR120−20	41,000	13.0	16.0
3655716	24ACC642A**30	CAP**6024A**	58VMR120−20	40,500	13.0	16.0
3655725	24ACC642A**30	CAP**6024A**+TDR		41,500	12.0	14.5
3655727	24ACC642A**30	CAP**6025A**	58HDV080−−20	41,500	13.0	15.0
3655729	24ACC642A**30	CAP**6025A**	58HDV100−−20	41,500	13.0	15.5
3655731	24ACC642A**30	CAP**6025A**+TDR		41,500	12.0	14.5
3655953	24ACC642A**30	CNPH*4221A**	58CV(A,X)070−12	39,500	12.5	14.5
3655956	24ACC642A**30	CNPH*4221A**	58CV(A,X)090−16	40,000	12.5	15.0
3655959	24ACC642A**30	CNPH*4221A**	58CV(A,X)110−20	40,000	12.5	15.0
3655962	24ACC642A**30	CNPH*4221A**	58CV(A,X)135−22	40,000	13.0	15.5
3655965	24ACC642A**30	CNPH*4221A**	58CV(A,X)155−22	40,000	13.0	15.5
4138376	24ACC642A**30	CNPH*4221A**	58HDV080−−20	40,500	12.5	15.0
4138377	24ACC642A**30	CNPH*4221A**	58HDV100−−20	40,500	12.5	15.0
3655968	24ACC642A**30	CNPH*4221A**	58ME(B,C)060−12	40,000	12.5	15.0
3655971	24ACC642A**30	CNPH*4221A**	58ME(B,C)080−12	40,000	12.5	15.0
3655974	24ACC642A**30	CNPH*4221A**	58ME(B,C)080−16	40,000	12.5	15.0
3655976	24ACC642A**30	CNPH*4221A**	58ME(B,C)100−20	40,000	13.0	15.5
3655977	24ACC642A**30	CNPH*4221A**	58ME(B,C)120−20	40,000	13.0	15.5
3655980	24ACC642A**30	CNPH*4221A**	58MEB040−12	40,000	12.5	15.0
3655983	24ACC642A**30	CNPH*4221A**	58MV(B,C)060−14	40,000	12.5	15.0
3655986	24ACC642A**30	CNPH*4221A**	58MV(B,C)080−14	39,500	12.0	14.5
3655989	24ACC642A**30	CNPH*4221A**	58MV(B,C)080−20	39,500	12.5	14.5

See notes on page 46

COMBINATION RATINGS CONTINUED

AHRI Ref. No.	Model Number	Indoor Model	Furnace Model	Capacity	EER	SEER
3655992	24ACC642A**30	CNPH*4221A**	58MV(B,C)100−20	39,500	12.5	15.0
3655995	24ACC642A**30	CNPH*4221A**	58MV(B,C)120−20	40,000	12.5	15.0
3655998	24ACC642A**30	CNPH*4221A**	58MVB040−14	39,500	12.5	14.5
3656002	24ACC642A**30	CNPH*4221A**	58PH*070−16	39,500	12.0	14.5
3656005	24ACC642A**30	CNPH*4221A**	58PH*090−16	40,000	12.5	15.0
3656007	24ACC642A**30	CNPH*4221A**	58PH*110−20	40,000	13.0	15.5
3656008	24ACC642A**30	CNPH*4221A**	58PH*135−20	40,000	12.5	15.0
3656012	24ACC642A**30	CNPH*4221A**	58VLR120−20	39,500	12.5	15.0
3656016	24ACC642A**30	CNPH*4221A**	58VMR120−20	39,500	12.5	15.0
4765085	24ACC642A**30	CNPH*4221A**	59*N*A060V17**14	39,500	12.0	14.5
4765086	24ACC642A**30	CNPH*4221A**	59*N*A080V17**14	40,000	12.5	15.0
4765087	24ACC642A**30	CNPH*4221A**	59*N*A100V21**20	40,000	12.5	15.2
4765088	24ACC642A**30	CNPH*4221A**	59*N*A120V24**22	40,000	12.7	15.5
4765089	24ACC642A**30	CNPH*4221A**	59*P5A060E17**14	40,000	12.0	14.5
4765090	24ACC642A**30	CNPH*4221A**	59*P5A080E17**16	40,000	12.5	15.0
4765091	24ACC642A**30	CNPH*4221A**	59*P5A100E21**16	40,000	12.5	15.2
4765092	24ACC642A**30	CNPH*4221A**	59*P5A120E24**22	40,500	12.7	15.5
4138402	24ACC642A**30	CNPH*4221A**	OVLAAB048112	40,500	12.0	14.5
4138403	24ACC642A**30	CNPH*4221A**	OVLAAB060154	41,000	12.5	15.0
4138401	24ACC642A**30	CNPH*4221A**	OVMAAB042112	40,000	12.5	14.5
3656034	24ACC642A**30	CNPH*4221A**+TDR		40,000	12.0	14.0
3656035	24ACC642A**30	CNPH*4321A**	58CV(A,X)070−12	40,500	12.5	15.0
3656036	24ACC642A**30	CNPH*4321A**	58CV(A,X)090−16	41,000	13.0	16.0
3656037	24ACC642A**30	CNPH*4321A**	58CV(A,X)110−20	41,000	13.0	16.0
3656038	24ACC642A**30	CNPH*4321A**	58CV(A,X)135−22	41,000	13.0	16.0
3656039	24ACC642A**30	CNPH*4321A**	58CV(A,X)155−22	41,000	13.0	16.0
4138378	24ACC642A**30	CNPH*4321A**	58HDV080−−20	42,000	13.0	15.5
4138379	24ACC642A**30	CNPH*4321A**	58HDV100−−20	41,500	13.0	15.5
3656040	24ACC642A**30	CNPH*4321A**	58ME(B,C)060−12	41,500	13.0	15.5
3656041	24ACC642A**30	CNPH*4321A**	58ME(B,C)080−12	41,500	13.0	15.5
3656042	24ACC642A**30	CNPH*4321A**	58ME(B,C)080−16	41,000	13.0	15.5
3656043	24ACC642A**30	CNPH*4321A**	58ME(B,C)100−20	41,500	13.0	16.0
3656044	24ACC642A**30	CNPH*4321A**	58ME(B,C)120−20	41,500	13.0	16.0
3656045	24ACC642A**30	CNPH*4321A**	58MEB040−12	41,500	13.0	15.5
3656046	24ACC642A**30	CNPH*4321A**	58MV(B,C)060−14	41,000	13.0	15.5
3656047	24ACC642A**30	CNPH*4321A**	58MV(B,C)080−14	41,000	12.5	15.0
3656048	24ACC642A**30	CNPH*4321A**	58MV(B,C)080−20	41,000	13.0	15.5
3656049	24ACC642A**30	CNPH*4321A**	58MV(B,C)100−20	40,500	13.0	15.5
3656050	24ACC642A**30	CNPH*4321A**	58MV(B,C)120−20	41,000	13.0	16.0
3656051	24ACC642A**30	CNPH*4321A**	58MVB040−14	40,500	12.5	15.0
3656052	24ACC642A**30	CNPH*4321A**	58PH*070−16	41,000	12.5	15.0
3656053	24ACC642A**30	CNPH*4321A**	58PH*090−16	41,000	13.0	16.0
3656054	24ACC642A**30	CNPH*4321A**	58PH*110−20	41,500	13.0	16.0
3656055	24ACC642A**30	CNPH*4321A**	58PH*135−20	41,000	13.0	16.0
3656056	24ACC642A**30	CNPH*4321A**	58VLR120−20	41,000	13.0	16.0
3656057	24ACC642A**30	CNPH*4321A**	58VMR120−20	40,500	13.0	16.0
4765093	24ACC642A**30	CNPH*4321A**	59*N*A060V17**14	41,000	12.5	15.2
4765094	24ACC642A**30	CNPH*4321A**	59*N*A080V17**14	41,000	12.7	15.5
4765095	24ACC642A**30	CNPH*4321A**	59*N*A100V21**20	41,000	12.7	15.5
4765096	24ACC642A**30	CNPH*4321A**	59*N*A120V24**22	41,000	13.0	16.0
4765097	24ACC642A**30	CNPH*4321A**	59*P5A060E17**14	41,500	12.5	15.2
4765098	24ACC642A**30	CNPH*4321A**	59*P5A080E17**16	41,500	12.7	15.5
4765099	24ACC642A**30	CNPH*4321A**	59*P5A100E21**16	41,500	12.7	15.5
4765100	24ACC642A**30	CNPH*4321A**	59*P5A120E24**22	42,000	13.0	16.0
4138405	24ACC642A**30	CNPH*4321A**	OVLAAB048112	41,500	12.5	15.0
4138406	24ACC642A**30	CNPH*4321A**	OVLAAB060154	42,000	13.0	15.5
4138404	24ACC642A**30	CNPH*4321A**	OVMAAB042112	41,500	13.0	15.5
3656063	24ACC642A**30	CNPH*4321A**+TDR		41,500	12.0	14.5
3656065	24ACC642A**30	CNPH*4821A**	58CV(A,X)070−12	40,500	12.5	15.0
3656067	24ACC642A**30	CNPH*4821A**	58CV(A,X)090−16	40,500	13.0	15.5
3656070	24ACC642A**30	CNPH*4821A**	58CV(A,X)110−20	40,500	13.0	16.0
3656073	24ACC642A**30	CNPH*4821A**	58CV(A,X)135−22	40,500	13.0	16.0
3656076	24ACC642A**30	CNPH*4821A**	58CV(A,X)155−22	40,500	13.0	16.0
4138380	24ACC642A**30	CNPH*4821A**	58HDV080−−20	41,500	13.0	15.0
4138381	24ACC642A**30	CNPH*4821A**	58HDV100−−20	41,000	13.0	15.5
3656079	24ACC642A**30	CNPH*4821A**	58ME(B,C)060−12	41,000	12.5	15.0
3656081	24ACC642A**30	CNPH*4821A**	58ME(B,C)080−12	41,000	13.0	15.5
3656083	24ACC642A**30	CNPH*4821A**	58ME(B,C)080−16	40,500	13.0	15.5
3656086	24ACC642A**30	CNPH*4821A**	58ME(B,C)100−20	41,000	13.0	16.0
3656088	24ACC642A**30	CNPH*4821A**	58ME(B,C)120−20	41,000	13.0	16.0
3656091	24ACC642A**30	CNPH*4821A**	58MEB040−12	41,000	13.0	15.2
3656093	24ACC642A**30	CNPH*4821A**	58MV(B,C)060−14	40,500	13.0	15.5

See notes on page 46

COMBINATION RATINGS CONTINUED

AHRI Ref. No.	Model Number	Indoor Model	Furnace Model	Capacity	EER	SEER
3656095	24ACC642A**30	CNPH*4821A**	58MV(B,C)080−14	40,500	12.5	15.0
3656097	24ACC642A**30	CNPH*4821A**	58MV(B,C)080−20	40,500	12.5	15.2
3656100	24ACC642A**30	CNPH*4821A**	58MV(B,C)100−20	40,000	13.0	15.5
3656103	24ACC642A**30	CNPH*4821A**	58MV(B,C)120−20	40,500	13.0	15.5
3656106	24ACC642A**30	CNPH*4821A**	58MVB040−14	40,000	12.5	15.0
3656109	24ACC642A**30	CNPH*4821A**	58PH*070−16	40,500	12.0	14.5
3656111	24ACC642A**30	CNPH*4821A**	58PH*090−16	40,500	13.0	15.5
3656114	24ACC642A**30	CNPH*4821A**	58PH*110−20	41,000	13.0	16.0
3656116	24ACC642A**30	CNPH*4821A**	58PH*135−20	41,000	13.0	16.0
3656120	24ACC642A**30	CNPH*4821A**	58VLR120−20	40,500	13.0	16.0
3656124	24ACC642A**30	CNPH*4821A**	58VMR120−20	40,000	13.0	15.5
4765101	24ACC642A**30	CNPH*4821A**	59*N*A060V17**14	40,500	12.5	15.2
4765102	24ACC642A**30	CNPH*4821A**	59*N*A080V17**14	40,500	12.7	15.5
4765103	24ACC642A**30	CNPH*4821A**	59*N*A100V21**20	40,500	12.7	15.5
4765104	24ACC642A**30	CNPH*4821A**	59*N*A120V24**22	40,500	13.0	16.0
4765105	24ACC642A**30	CNPH*4821A**	59*P5A060E17**14	41,000	12.5	15.2
4765106	24ACC642A**30	CNPH*4821A**	59*P5A080E17**16	41,000	12.5	15.2
4765107	24ACC642A**30	CNPH*4821A**	59*P5A100E21**16	41,000	12.7	15.5
4765108	24ACC642A**30	CNPH*4821A**	59*P5A120E24**22	41,500	12.7	15.5
4138408	24ACC642A**30	CNPH*4821A**	OVLAAB048112	41,000	12.5	15.0
4138409	24ACC642A**30	CNPH*4821A**	OVLAAB060154	42,000	13.0	15.5
4138407	24ACC642A**30	CNPH*4821A**	OVMAAB042112	41,000	12.5	15.0
3656140	24ACC642A**30	CNPH*4821A**+TDR		41,000	12.0	14.0
3656142	24ACC642A**30	CNPH*6024A**	58CV(A,X)070−12	41,000	13.0	15.2
3656143	24ACC642A**30	CNPH*6024A**	58CV(A,X)090−16	41,000	13.0	16.0
3656145	24ACC642A**30	CNPH*6024A**	58CV(A,X)110−20	41,000	13.0	16.0
3656147	24ACC642A**30	CNPH*6024A**	58CV(A,X)135−22	41,000	13.0	16.0
3656149	24ACC642A**30	CNPH*6024A**	58CV(A,X)155−22	41,000	13.0	16.0
3656151	24ACC642A**30	CNPH*6024A**	58ME(B,C)060−12	41,500	13.0	15.5
3656152	24ACC642A**30	CNPH*6024A**	58ME(B,C)080−12	41,500	13.0	15.5
3656153	24ACC642A**30	CNPH*6024A**	58ME(B,C)080−16	41,000	13.0	15.5
3656155	24ACC642A**30	CNPH*6024A**	58ME(B,C)100−20	41,500	13.0	16.0
3656157	24ACC642A**30	CNPH*6024A**	58ME(B,C)120−20	41,500	13.0	16.0
3656159	24ACC642A**30	CNPH*6024A**	58MEB040−12	41,500	13.0	15.5
3656160	24ACC642A**30	CNPH*6024A**	58MV(B,C)060−14	41,000	13.0	15.5
3656161	24ACC642A**30	CNPH*6024A**	58MV(B,C)080−14	41,000	13.0	15.5
3656162	24ACC642A**30	CNPH*6024A**	58MV(B,C)080−20	41,000	13.0	15.5
3656164	24ACC642A**30	CNPH*6024A**	58MV(B,C)100−20	40,500	13.0	15.5
3656166	24ACC642A**30	CNPH*6024A**	58MV(B,C)120−20	41,000	13.0	16.0
3656168	24ACC642A**30	CNPH*6024A**	58MVB040−14	40,500	13.0	15.5
3656169	24ACC642A**30	CNPH*6024A**	58PH*070−16	41,000	12.5	14.5
3656170	24ACC642A**30	CNPH*6024A**	58PH*090−16	41,500	13.0	16.0
3656172	24ACC642A**30	CNPH*6024A**	58PH*110−20	41,500	13.0	16.0
3656174	24ACC642A**30	CNPH*6024A**	58PH*135−20	41,500	13.0	16.0
3656176	24ACC642A**30	CNPH*6024A**	58VLR120−20	41,000	13.0	16.0
3656178	24ACC642A**30	CNPH*6024A**	58VMR120−20	41,000	13.0	16.0
3656180	24ACC642A**30	CNPH*6024A**		41,500	12.0	14.5
3656190	24ACC642A**30	CNPH*6024A**+TDR		41,500	12.0	14.0
3656419	24ACC642A**30	CNPV*4217A**	58CV(A,X)070−12	40,000	12.5	14.5
3656422	24ACC642A**30	CNPV*4217A**	58CV(A,X)090−16	40,000	12.5	15.2
3656425	24ACC642A**30	CNPV*4217A**	58ME(B,C)060−12	40,500	12.5	15.0
3656428	24ACC642A**30	CNPV*4217A**	58ME(B,C)080−12	40,500	12.5	15.0
3656431	24ACC642A**30	CNPV*4217A**	58ME(B,C)080−16	40,000	12.5	15.0
3656434	24ACC642A**30	CNPV*4217A**	58MEB040−12	40,500	12.5	15.0
3656437	24ACC642A**30	CNPV*4217A**	58MV(B,C)060−14	40,500	12.5	15.0
3656441	24ACC642A**30	CNPV*4217A**	58PH*070−16	40,000	12.0	14.5
3656448	24ACC642A**30	CNPV*4217A**	58UVB060−14	40,500	12.5	15.0
4765061	24ACC642A**30	CNPV*4217A**	59*N*A060V17**14	40,000	12.5	15.0
4765062	24ACC642A**30	CNPV*4217A**	59*N*A080V17**14	40,000	12.5	15.2
4765063	24ACC642A**30	CNPV*4217A**	59*P5A060E17**14	40,500	12.5	15.0
4765064	24ACC642A**30	CNPV*4217A**	59*P5A080E17**16	40,500	12.5	15.0
4138392	24ACC642A**30	CNPV*4217A**	OVMAAB042112	40,500	12.5	14.5
3656451	24ACC642A**30	CNPV*4217A**+TDR		40,500	12.0	14.0
3656454	24ACC642A**30	CNPV*4221A**	58CV(A,X)090−16	40,000	12.5	15.0
3656457	24ACC642A**30	CNPV*4221A**	58CV(A,X)110−20	40,000	12.5	15.0
4138370	24ACC642A**30	CNPV*4221A**	58HDV080−−20	40,500	12.5	15.0
3656460	24ACC642A**30	CNPV*4221A**	58ME(B,C)060−12	40,000	12.5	15.0
3656463	24ACC642A**30	CNPV*4221A**	58ME(B,C)080−12	40,000	12.5	15.0
3656466	24ACC642A**30	CNPV*4221A**	58ME(B,C)080−16	40,000	12.5	15.0
3656468	24ACC642A**30	CNPV*4221A**	58ME(B,C)100−20	40,000	13.0	15.5
3656471	24ACC642A**30	CNPV*4221A**	58MEB040−12	40,000	12.5	15.0
3656474	24ACC642A**30	CNPV*4221A**	58MV(B,C)060−14	40,000	12.5	15.0

See notes on page 46

COMBINATION RATINGS CONTINUED

AHRI Ref. No.	Model Number	Indoor Model	Furnace Model	Capacity	EER	SEER
3656477	24ACC642A**30	CNPV*4221A**	58MV(B,C)080−14	39,500	12.0	14.5
3656480	24ACC642A**30	CNPV*4221A**	58MV(B,C)080−20	39,500	12.5	14.5
3656483	24ACC642A**30	CNPV*4221A**	58MV(B,C)100−20	39,500	12.5	15.0
3656486	24ACC642A**30	CNPV*4221A**	58PH*070−16	39,500	12.0	14.5
3656489	24ACC642A**30	CNPV*4221A**	58PH*090−16	40,000	12.5	15.0
3656491	24ACC642A**30	CNPV*4221A**	58PH*110−20	40,000	13.0	15.5
3656502	24ACC642A**30	CNPV*4221A**	58UVB060−14	40,000	12.5	15.0
3656505	24ACC642A**30	CNPV*4221A**	58UVB080−14	39,500	12.0	14.5
3656508	24ACC642A**30	CNPV*4221A**	58UVB080−20	39,500	12.5	14.5
3656511	24ACC642A**30	CNPV*4221A**	58UVB100−20	39,500	12.5	15.0
3656495	24ACC642A**30	CNPV*4221A**	58VLR120−20	39,500	12.5	15.0
3656499	24ACC642A**30	CNPV*4221A**	58VMR120−20	39,500	12.5	15.0
4765065	24ACC642A**30	CNPV*4221A**	59*N*A060V17**14	39,500	12.0	14.5
4765066	24ACC642A**30	CNPV*4221A**	59*N*A080V17**14	40,000	12.5	15.0
4765067	24ACC642A**30	CNPV*4221A**	59*N*A100V21**20	40,000	12.5	15.2
4765068	24ACC642A**30	CNPV*4221A**	59*P5A060E17**14	40,000	12.0	14.5
4765069	24ACC642A**30	CNPV*4221A**	59*P5A080E17**16	40,000	12.5	15.0
4765070	24ACC642A**30	CNPV*4221A**	59*P5A100E21**16	40,000	12.5	15.2
4138394	24ACC642A**30	CNPV*4221A**	OVLAAB048112	40,500	12.0	14.5
4138393	24ACC642A**30	CNPV*4221A**	OVMAAB042112	40,000	12.5	14.5
3656514	24ACC642A**30	CNPV*4221A**+TDR		40,000	12.0	14.0
3656515	24ACC642A**30	CNPV*4324A**	58CV(A,X)110−20	41,000	13.0	16.0
3656516	24ACC642A**30	CNPV*4324A**	58CV(A,X)135−22	41,000	13.0	16.0
3656517	24ACC642A**30	CNPV*4324A**	58CV(A,X)155−22	41,000	13.0	16.0
4138371	24ACC642A**30	CNPV*4324A**	58HDV080−−20	42,000	13.0	15.5
4138372	24ACC642A**30	CNPV*4324A**	58HDV100−−20	41,500	13.0	15.5
3656518	24ACC642A**30	CNPV*4324A**	58ME(B,C)100−20	41,500	13.0	16.0
3656519	24ACC642A**30	CNPV*4324A**	58ME(B,C)120−20	41,500	13.0	16.0
3656520	24ACC642A**30	CNPV*4324A**	58MV(B,C)080−14	41,000	13.0	15.5
3656521	24ACC642A**30	CNPV*4324A**	58MV(B,C)080−20	41,000	13.0	15.5
3656522	24ACC642A**30	CNPV*4324A**	58MV(B,C)100−20	40,500	13.0	16.0
3656523	24ACC642A**30	CNPV*4324A**	58MV(B,C)120−20	41,000	13.0	16.0
3656524	24ACC642A**30	CNPV*4324A**	58MVB040−14	40,500	13.0	15.5
3656525	24ACC642A**30	CNPV*4324A**	58PH*090−16	41,500	13.0	16.0
3656526	24ACC642A**30	CNPV*4324A**	58PH*110−20	41,500	13.0	16.0
3656527	24ACC642A**30	CNPV*4324A**	58PH*135−20	41,500	13.0	16.0
3656530	24ACC642A**30	CNPV*4324A**	58UVB080−14	41,000	13.0	15.5
3656531	24ACC642A**30	CNPV*4324A**	58UVB080−20	41,000	13.0	15.5
3656532	24ACC642A**30	CNPV*4324A**	58UVB100−20	40,500	13.0	16.0
3656533	24ACC642A**30	CNPV*4324A**	58UVB120−20	41,000	13.0	16.0
3656528	24ACC642A**30	CNPV*4324A**	58VLR120−20	41,000	13.0	16.0
3656529	24ACC642A**30	CNPV*4324A**	58VMR120−20	41,000	13.0	16.0
4765071	24ACC642A**30	CNPV*4324A**	59*N*A100V21**20	41,000	13.0	16.0
4765072	24ACC642A**30	CNPV*4324A**	59*N*A120V24**22	41,000	13.0	16.0
4765073	24ACC642A**30	CNPV*4324A**	59*P5A100E21**16	41,500	12.7	15.5
4765074	24ACC642A**30	CNPV*4324A**	59*P5A120E24**22	42,000	13.0	16.0
4138395	24ACC642A**30	CNPV*4324A**	OVLAAB048112	41,500	12.5	15.0
4138396	24ACC642A**30	CNPV*4324A**	OVLAAB060154	42,000	13.0	15.5
3656536	24ACC642A**30	CNPV*4821A**	58CV(A,X)090−16	40,500	13.0	15.5
3656539	24ACC642A**30	CNPV*4821A**	58CV(A,X)110−20	40,500	13.0	16.0
4138373	24ACC642A**30	CNPV*4821A**	58HDV080−−20	41,500	13.0	15.0
3656542	24ACC642A**30	CNPV*4821A**	58ME(B,C)060−12	41,000	13.0	15.2
3656544	24ACC642A**30	CNPV*4821A**	58ME(B,C)080−12	41,000	13.0	15.5
3656546	24ACC642A**30	CNPV*4821A**	58ME(B,C)080−16	40,500	13.0	15.5
3656549	24ACC642A**30	CNPV*4821A**	58ME(B,C)100−20	41,000	13.0	16.0
3656552	24ACC642A**30	CNPV*4821A**	58MEB040−12	41,000	13.0	15.2
3656554	24ACC642A**30	CNPV*4821A**	58MV(B,C)060−14	40,500	13.0	15.5
3656556	24ACC642A**30	CNPV*4821A**	58MV(B,C)080−14	40,500	12.5	15.0
3656558	24ACC642A**30	CNPV*4821A**	58MV(B,C)080−20	40,500	13.0	15.2
3656561	24ACC642A**30	CNPV*4821A**	58MV(B,C)100−20	40,000	13.0	15.5
3656564	24ACC642A**30	CNPV*4821A**	58PH*070−16	40,500	12.0	14.5
3656566	24ACC642A**30	CNPV*4821A**	58PH*090−16	40,500	13.0	15.5
3656569	24ACC642A**30	CNPV*4821A**	58PH*110−20	41,000	13.0	16.0
3656580	24ACC642A**30	CNPV*4821A**	58UVB060−14	40,500	13.0	15.5
3656582	24ACC642A**30	CNPV*4821A**	58UVB080−14	40,500	12.5	15.0
3656584	24ACC642A**30	CNPV*4821A**	58UVB080−20	40,500	13.0	15.2
3656587	24ACC642A**30	CNPV*4821A**	58UVB100−20	40,000	13.0	15.5
3656573	24ACC642A**30	CNPV*4821A**	58VLR120−20	40,500	13.0	16.0
3656577	24ACC642A**30	CNPV*4821A**	58VMR120−20	40,000	13.0	15.5
4765075	24ACC642A**30	CNPV*4821A**	59*N*A060V17**14	40,500	12.5	15.2
4765076	24ACC642A**30	CNPV*4821A**	59*N*A080V17**14	40,500	12.7	15.5
4765077	24ACC642A**30	CNPV*4821A**	59*N*A100V21**20	40,500	12.7	15.5

See notes on page 46

COMBINATION RATINGS CONTINUED

AHRI Ref. No.	Model Number	Indoor Model	Furnace Model	Capacity	EER	SEER
4765078	24ACC642A**30	CNPV*4821A**	59*P5A060E17**14	41,000	12.5	15.2
4765079	24ACC642A**30	CNPV*4821A**	59*P5A080E17**16	41,000	12.5	15.2
4765080	24ACC642A**30	CNPV*4821A**	59*P5A100E21**16	41,000	12.7	15.5
4138398	24ACC642A**30	CNPV*4821A**	OVLAAB048112	41,000	12.5	15.0
4138397	24ACC642A**30	CNPV*4821A**	OVMAAB042112	41,000	12.5	15.0
3656590	24ACC642A**30	CNPV*4821A**+TDR		41,000	12.0	14.0
3656593	24ACC642A**30	CNPV*4824A**	58CV(A,X)110−20	40,500	13.0	16.0
3656596	24ACC642A**30	CNPV*4824A**	58CV(A,X)135−22	40,500	13.0	16.0
3656599	24ACC642A**30	CNPV*4824A**	58CV(A,X)155−22	40,500	13.0	16.0
4138374	24ACC642A**30	CNPV*4824A**	58HDV080−−20	41,500	13.0	15.0
4138375	24ACC642A**30	CNPV*4824A**	58HDV100−−20	41,000	13.0	15.5
3656602	24ACC642A**30	CNPV*4824A**	58ME(B,C)100−20	41,000	13.0	16.0
3656604	24ACC642A**30	CNPV*4824A**	58ME(B,C)120−20	41,000	13.0	16.0
3656607	24ACC642A**30	CNPV*4824A**	58MV(B,C)080−14	40,500	12.5	15.0
3656609	24ACC642A**30	CNPV*4824A**	58MV(B,C)080−20	40,500	13.0	15.2
3656612	24ACC642A**30	CNPV*4824A**	58MV(B,C)100−20	40,000	13.0	15.5
3656615	24ACC642A**30	CNPV*4824A**	58MV(B,C)120−20	40,500	13.0	15.5
3656618	24ACC642A**30	CNPV*4824A**	58MVB040−14	40,000	12.5	15.0
3656620	24ACC642A**30	CNPV*4824A**	58PH*090−16	40,500	13.0	16.0
3656623	24ACC642A**30	CNPV*4824A**	58PH*110−20	41,000	13.0	16.0
3656625	24ACC642A**30	CNPV*4824A**	58PH*135−20	41,000	13.0	16.0
3656634	24ACC642A**30	CNPV*4824A**	58UVB080−14	40,500	12.5	15.0
3656636	24ACC642A**30	CNPV*4824A**	58UVB080−20	40,500	13.0	15.2
3656639	24ACC642A**30	CNPV*4824A**	58UVB100−20	40,000	13.0	15.5
3656642	24ACC642A**30	CNPV*4824A**	58UVB120−20	40,500	13.0	15.5
3656628	24ACC642A**30	CNPV*4824A**	58VLR120−20	40,500	13.0	16.0
3656631	24ACC642A**30	CNPV*4824A**	58VMR120−20	40,000	13.0	15.5
4765081	24ACC642A**30	CNPV*4824A**	59*N*A100V21**20	40,500	12.7	15.5
4765082	24ACC642A**30	CNPV*4824A**	59*N*A120V24**22	40,500	13.0	16.0
4765083	24ACC642A**30	CNPV*4824A**	59*P5A100E21**16	41,000	12.7	15.5
4765084	24ACC642A**30	CNPV*4824A**	59*P5A120E24**22	41,500	12.7	15.5
4138399	24ACC642A**30	CNPV*4824A**	OVLAAB048112	41,000	12.5	15.0
4138400	24ACC642A**30	CNPV*4824A**	OVLAAB060154	42,000	13.0	15.5
3656645	24ACC642A**30	CNPV*4824A**+TDR		41,000	12.0	14.0
3656647	24ACC642A**30	CNPV*6024A**	58CV(A,X)110−20	41,000	13.0	16.0
3656649	24ACC642A**30	CNPV*6024A**	58CV(A,X)135−22	41,000	13.0	16.0
3656651	24ACC642A**30	CNPV*6024A**	58CV(A,X)155−22	41,000	13.0	16.0
3656653	24ACC642A**30	CNPV*6024A**	58ME(B,C)100−20	41,500	13.0	16.0
3656655	24ACC642A**30	CNPV*6024A**	58ME(B,C)120−20	41,500	13.0	16.0
3656657	24ACC642A**30	CNPV*6024A**	58MV(B,C)080−14	41,000	13.0	15.5
3656658	24ACC642A**30	CNPV*6024A**	58MV(B,C)080−20	41,000	13.0	15.5
3656660	24ACC642A**30	CNPV*6024A**	58MV(B,C)100−20	40,500	13.0	15.5
3656662	24ACC642A**30	CNPV*6024A**	58MV(B,C)120−20	41,000	13.0	16.0
3656664	24ACC642A**30	CNPV*6024A**	58MVB040−14	40,500	13.0	15.5
3656665	24ACC642A**30	CNPV*6024A**	58PH*090−16	41,500	13.0	16.0
3656667	24ACC642A**30	CNPV*6024A**	58PH*110−20	41,500	13.0	16.0
3656669	24ACC642A**30	CNPV*6024A**	58PH*135−20	41,500	13.0	16.0
3656675	24ACC642A**30	CNPV*6024A**	58UVB080−14	41,000	13.0	15.5
3656676	24ACC642A**30	CNPV*6024A**	58UVB080−20	41,000	13.0	15.5
3656678	24ACC642A**30	CNPV*6024A**	58UVB100−20	40,500	13.0	15.5
3656680	24ACC642A**30	CNPV*6024A**	58UVB120−20	41,000	13.0	16.0
3656671	24ACC642A**30	CNPV*6024A**	58VLR120−20	41,000	13.0	16.0
3656673	24ACC642A**30	CNPV*6024A**	58VMR120−20	41,000	13.0	16.0
3656682	24ACC642A**30	CNPV*6024A**+TDR		41,500	12.0	14.0
3656857	24ACC642A**30	CSPH*4212A**	58CV(A,X)070−12	40,500	12.5	15.0
3656860	24ACC642A**30	CSPH*4212A**	58CV(A,X)090−16	40,500	13.0	15.5
3656863	24ACC642A**30	CSPH*4212A**	58CV(A,X)110−20	40,500	13.0	15.5
3656866	24ACC642A**30	CSPH*4212A**	58CV(A,X)135−22	40,500	13.0	16.0
3656869	24ACC642A**30	CSPH*4212A**	58CV(A,X)155−22	40,500	13.0	16.0
3656873	24ACC642A**30	CSPH*4212A**	58HDV080−−20	41,000	12.5	15.0
3656875	24ACC642A**30	CSPH*4212A**	58HDV100−−20	41,000	13.0	15.5
3656878	24ACC642A**30	CSPH*4212A**	58ME(B,C)060−12	41,000	12.5	15.0
3656881	24ACC642A**30	CSPH*4212A**	58ME(B,C)080−12	41,000	13.0	15.5
3656884	24ACC642A**30	CSPH*4212A**	58ME(B,C)080−16	40,500	13.0	15.5
3656886	24ACC642A**30	CSPH*4212A**	58ME(B,C)100−20	41,000	13.0	16.0
3656887	24ACC642A**30	CSPH*4212A**	58ME(B,C)120−20	41,000	13.0	16.0
3656890	24ACC642A**30	CSPH*4212A**	58MEB040−12	41,000	13.0	15.2
3656893	24ACC642A**30	CSPH*4212A**	58MV(B,C)060−14	41,000	13.0	15.2
3656896	24ACC642A**30	CSPH*4212A**	58MV(B,C)080−14	40,500	12.5	15.0
3656899	24ACC642A**30	CSPH*4212A**	58MV(B,C)080−20	40,500	12.5	15.0
3656902	24ACC642A**30	CSPH*4212A**	58MV(B,C)100−20	40,500	13.0	15.2
3656905	24ACC642A**30	CSPH*4212A**	58MV(B,C)120−20	40,500	13.0	15.5

See notes on page 46

COMBINATION RATINGS CONTINUED

AHRI Ref. No.	Model Number	Indoor Model	Furnace Model	Capacity	EER	SEER
3656908	24ACC642A**30	CSPH*4212A**	58MVB040−14	40,500	12.5	15.0
3656912	24ACC642A**30	CSPH*4212A**	58PH*070−16	40,500	12.0	14.5
3656915	24ACC642A**30	CSPH*4212A**	58PH*090−16	40,500	13.0	15.5
3656917	24ACC642A**30	CSPH*4212A**	58PH*110−20	41,000	13.0	16.0
3656918	24ACC642A**30	CSPH*4212A**	58PH*135−20	40,500	13.0	15.5
3656922	24ACC642A**30	CSPH*4212A**	58VLR120−20	40,500	13.0	15.5
3656926	24ACC642A**30	CSPH*4212A**	58VMR120−20	40,500	13.0	15.5
4765109	24ACC642A**30	CSPH*4212A**	59*N*A060V17**14	40,500	12.5	15.2
4765110	24ACC642A**30	CSPH*4212A**	59*N*A080V17**14	40,500	12.7	15.5
4765111	24ACC642A**30	CSPH*4212A**	59*N*A100V21**20	40,500	12.7	15.5
4765112	24ACC642A**30	CSPH*4212A**	59*N*A120V24**22	41,000	12.7	15.5
4765113	24ACC642A**30	CSPH*4212A**	59*P5A060E17**14	41,000	12.5	15.2
4765114	24ACC642A**30	CSPH*4212A**	59*P5A080E17**16	41,000	12.5	15.2
4765115	24ACC642A**30	CSPH*4212A**	59*P5A100E21**16	41,000	12.7	15.5
4765116	24ACC642A**30	CSPH*4212A**	59*P5A120E24**22	41,500	12.7	15.5
4138411	24ACC642A**30	CSPH*4212A**	OVLAAB048112	41,000	12.5	15.0
4138412	24ACC642A**30	CSPH*4212A**	OVLAAB060154	42,000	13.0	15.0
4138410	24ACC642A**30	CSPH*4212A**	OVMAAB042112	41,000	12.5	15.0
3656944	24ACC642A**30	CSPH*4212A**+TDR		41,000	12.0	14.0
3656946	24ACC642A**30	CSPH*4812A**	58CV(A,X)070−12	40,500	12.5	15.0
3656948	24ACC642A**30	CSPH*4812A**	58CV(A,X)090−16	40,500	13.0	15.5
3656951	24ACC642A**30	CSPH*4812A**	58CV(A,X)110−20	41,000	13.0	15.5
3656954	24ACC642A**30	CSPH*4812A**	58CV(A,X)135−22	41,000	13.0	16.0
3656957	24ACC642A**30	CSPH*4812A**	58CV(A,X)155−22	41,000	13.0	16.0
3656959	24ACC642A**30	CSPH*4812A**	58HDV080−−20	41,000	12.5	15.0
3656961	24ACC642A**30	CSPH*4812A**	58HDV100−−20	41,000	13.0	15.5
3656964	24ACC642A**30	CSPH*4812A**	58ME(B,C)060−12	41,000	13.0	15.2
3656966	24ACC642A**30	CSPH*4812A**	58ME(B,C)080−12	41,000	13.0	15.5
3656968	24ACC642A**30	CSPH*4812A**	58ME(B,C)080−16	41,000	13.0	15.5
3656971	24ACC642A**30	CSPH*4812A**	58ME(B,C)100−20	41,000	13.0	16.0
3656973	24ACC642A**30	CSPH*4812A**	58ME(B,C)120−20	41,000	13.0	16.0
3656976	24ACC642A**30	CSPH*4812A**	58MEB040−12	41,000	13.0	15.5
3656978	24ACC642A**30	CSPH*4812A**	58MV(B,C)060−14	41,000	13.0	15.2
3656980	24ACC642A**30	CSPH*4812A**	58MV(B,C)080−14	40,500	12.5	15.0
3656982	24ACC642A**30	CSPH*4812A**	58MV(B,C)080−20	40,500	12.5	15.0
3656985	24ACC642A**30	CSPH*4812A**	58MV(B,C)100−20	40,500	13.0	15.2
3656988	24ACC642A**30	CSPH*4812A**	58MV(B,C)120−20	40,500	13.0	15.5
3656991	24ACC642A**30	CSPH*4812A**	58MVB040−14	40,500	12.5	15.0
3656994	24ACC642A**30	CSPH*4812A**	58PH*070−16	40,500	12.5	14.5
3656996	24ACC642A**30	CSPH*4812A**	58PH*090−16	41,000	13.0	16.0
3656999	24ACC642A**30	CSPH*4812A**	58PH*110−20	41,000	13.0	16.0
3657001	24ACC642A**30	CSPH*4812A**	58PH*135−20	41,000	13.0	16.0
3657005	24ACC642A**30	CSPH*4812A**	58VLR120−20	40,500	13.0	16.0
3657009	24ACC642A**30	CSPH*4812A**	58VMR120−20	40,500	13.0	15.5
4765117	24ACC642A**30	CSPH*4812A**	59*N*A060V17**14	40,500	12.5	15.2
4765118	24ACC642A**30	CSPH*4812A**	59*N*A080V17**14	40,500	12.7	15.5
4765119	24ACC642A**30	CSPH*4812A**	59*N*A100V21**20	41,000	12.7	15.5
4765120	24ACC642A**30	CSPH*4812A**	59*N*A120V24**22	41,000	13.0	16.0
4765121	24ACC642A**30	CSPH*4812A**	59*P5A060E17**14	41,000	12.5	15.2
4765122	24ACC642A**30	CSPH*4812A**	59*P5A080E17**16	41,000	12.5	15.2
4765123	24ACC642A**30	CSPH*4812A**	59*P5A100E21**16	41,000	12.7	15.5
4765124	24ACC642A**30	CSPH*4812A**	59*P5A120E24**22	41,500	12.7	15.5
4138414	24ACC642A**30	CSPH*4812A**	OVLAAB048112	41,500	12.5	15.0
4138415	24ACC642A**30	CSPH*4812A**	OVLAAB060154	42,000	13.0	15.5
4138413	24ACC642A**30	CSPH*4812A**	OVMAAB042112	41,000	12.5	15.0
3657025	24ACC642A**30	CSPH*4812A**+TDR		41,000	12.0	14.0
3657027	24ACC642A**30	CSPH*6012A**	58CV(A,X)070−12	41,000	13.0	15.5
3657028	24ACC642A**30	CSPH*6012A**	58CV(A,X)090−16	41,000	13.0	16.0
3657030	24ACC642A**30	CSPH*6012A**	58CV(A,X)110−20	41,500	13.0	16.0
3657032	24ACC642A**30	CSPH*6012A**	58CV(A,X)135−22	41,500	13.0	16.0
3657034	24ACC642A**30	CSPH*6012A**	58CV(A,X)155−22	41,500	13.0	16.0
3657038	24ACC642A**30	CSPH*6012A**	58ME(B,C)060−12	41,500	13.0	15.5
3657039	24ACC642A**30	CSPH*6012A**	58ME(B,C)080−12	41,500	13.0	16.0
3657040	24ACC642A**30	CSPH*6012A**	58ME(B,C)080−16	41,500	13.0	16.0
3657042	24ACC642A**30	CSPH*6012A**	58ME(B,C)100−20	41,500	13.0	16.0
3657044	24ACC642A**30	CSPH*6012A**	58ME(B,C)120−20	41,500	13.0	16.0
3657046	24ACC642A**30	CSPH*6012A**	58MEB040−12	41,500	13.0	15.5
3657047	24ACC642A**30	CSPH*6012A**	58MV(B,C)060−14	41,500	13.0	16.0
3657048	24ACC642A**30	CSPH*6012A**	58MV(B,C)080−14	41,000	13.0	15.5
3657049	24ACC642A**30	CSPH*6012A**	58MV(B,C)080−20	41,000	13.0	15.5
3657051	24ACC642A**30	CSPH*6012A**	58MV(B,C)100−20	41,000	13.0	15.5
3657053	24ACC642A**30	CSPH*6012A**	58MV(B,C)120−20	41,000	13.0	16.0

See notes on page 46

COMBINATION RATINGS CONTINUED

AHRI Ref. No.	Model Number	Indoor Model	Furnace Model	Capacity	EER	SEER
3657055	24ACC642A**30	CSPH*6012A**	58MVB040−14	41,000	13.0	15.5
3657056	24ACC642A**30	CSPH*6012A**	58PH*070−16	41,500	12.5	15.0
3657057	24ACC642A**30	CSPH*6012A**	58PH*090−16	41,500	13.0	16.0
3657059	24ACC642A**30	CSPH*6012A**	58PH*110−20	41,500	13.0	16.0
3657061	24ACC642A**30	CSPH*6012A**	58PH*135−20	41,500	13.0	16.0
3657063	24ACC642A**30	CSPH*6012A**	58VLR120−20	41,000	13.0	16.0
3657065	24ACC642A**30	CSPH*6012A**	58VMR120−20	41,000	13.0	16.0
3657075	24ACC642A**30	CSPH*6012A**+TDR		41,500	12.0	14.5
3804432	24ACC642A**30	FB4CNF042		41,000	12.5	14.5
3693336	24ACC642A**30	FB4CNF042+TXV		41,000	12.5	15.0
3804433	24ACC642A**30	FB4CNF048		41,500	12.5	14.5
3693337	24ACC642A**30	FB4CNF048+TXV		41,000	13.0	15.0
3657080	24ACC642A**30	FE4AN(B,F)003+UI		40,000	13.0	15.5
3657083	24ACC642A**30	FE4AN(B,F)005+UI		41,000	13.0	16.0
3657086	24ACC642A**30	FE4ANB006+UI		41,500	13.0	16.0
3657094	24ACC642A**30	FE5ANB004+UI		41,500	13.0	16.0
3657129	24ACC642A**30	FV4CN(B,F)003		40,000	13.0	15.5
3657132	24ACC642A**30	FV4CN(B,F)005		41,000	13.0	16.0
3657135	24ACC642A**30	FV4CNB006		41,500	13.0	16.0
3657162	24ACC642A**30	FX4DN(B,F)043		41,000	12.5	15.0
3657164	24ACC642A**30	FX4DN(B,F)049		42,000	13.0	16.0
3804434	24ACC642A**30	FY5BNF042		41,000	12.0	14.0
3693344	24ACC642A**30	FY5BNF042+TXV		40,500	12.5	14.5
3804435	24ACC642A**30	FY5BNF048		41,500	12.0	14.0
3693345	24ACC642A**30	FY5BNF048+TXV		41,500	12.5	14.5
3656700	24ACC648A**30	†CNPV*6124A**+TDR		46,500	12.5	14.5
3655515	24ACC648A**30	CAP**4817A**	58CV(A,X)090−16	44,500	12.5	14.5
3655522	24ACC648A**30	CAP**4817A**	58ME(B,C)080−16	45,000	12.5	14.5
3655536	24ACC648A**30	CAP**4817A**+TDR		44,500	12.0	14.0
3655539	24ACC648A**30	CAP**4821A**	58CV(A,X)090−16	44,000	12.5	14.5
3655542	24ACC648A**30	CAP**4821A**	58CV(A,X)110−20	44,500	12.5	14.5
3655549	24ACC648A**30	CAP**4821A**	58ME(B,C)080−16	44,500	12.5	14.5
3655552	24ACC648A**30	CAP**4821A**	58ME(B,C)100−20	44,500	12.5	14.5
3655561	24ACC648A**30	CAP**4821A**	58MV(B,C)080−20	44,000	12.5	14.5
3655564	24ACC648A**30	CAP**4821A**	58MV(B,C)100−20	44,500	12.5	14.0
3655569	24ACC648A**30	CAP**4821A**	58PH*090−16	44,500	12.5	14.5
3655572	24ACC648A**30	CAP**4821A**	58PH*110−20	44,500	13.0	15.0
3655587	24ACC648A**30	CAP**4821A**	58UVB080−20	44,000	12.5	14.5
3655590	24ACC648A**30	CAP**4821A**	58UVB100−20	44,500	12.5	14.0
3655576	24ACC648A**30	CAP**4821A**	58VLR120−20	44,000	12.5	14.5
3655580	24ACC648A**30	CAP**4821A**	58VMR120−20	44,000	12.0	14.5
4765125	24ACC648A**30	CAP**4821A**	59*N*A100V21**20	42,000	12.0	14.5
4765126	24ACC648A**30	CAP**4821A**	59*P5A100E21**16	42,000	12.0	14.5
3655593	24ACC648A**30	CAP**4821A**+TDR		45,000	12.0	14.0
3655597	24ACC648A**30	CAP**4823A**	58HDV080−−20	44,500	12.5	14.0
4765137	24ACC648A**30	CAP**4823A**	59*N*A100V21**20	42,000	12.0	14.5
4765138	24ACC648A**30	CAP**4823A**	59*N*A120V24**22	42,000	12.5	15.0
4765139	24ACC648A**30	CAP**4823A**	59*P5A100E21**16	42,000	12.0	14.5
4765140	24ACC648A**30	CAP**4823A**	59*P5A120E24**22	42,000	12.5	15.0
3655600	24ACC648A**30	CAP**4823A**+TDR		45,000	12.0	14.0
3655603	24ACC648A**30	CAP**4824A**	58CV(A,X)110−20	44,500	12.5	14.5
3655606	24ACC648A**30	CAP**4824A**	58CV(A,X)135−22	44,500	13.0	15.0
3655609	24ACC648A**30	CAP**4824A**	58CV(A,X)155−22	44,500	13.0	15.2
3655612	24ACC648A**30	CAP**4824A**	58ME(B,C)100−20	44,500	13.0	15.0
3655614	24ACC648A**30	CAP**4824A**	58ME(B,C)120−20	45,000	13.0	15.2
3655619	24ACC648A**30	CAP**4824A**	58MV(B,C)080−20	44,000	12.5	14.5
3655622	24ACC648A**30	CAP**4824A**	58MV(B,C)100−20	44,500	12.5	14.5
3655625	24ACC648A**30	CAP**4824A**	58MV(B,C)120−20	44,500	12.5	14.5
3655630	24ACC648A**30	CAP**4824A**	58PH*090−16	44,500	12.5	14.5
3655633	24ACC648A**30	CAP**4824A**	58PH*110−20	44,500	13.0	15.2
3655635	24ACC648A**30	CAP**4824A**	58PH*135−20	44,500	12.5	15.0
3655646	24ACC648A**30	CAP**4824A**	58UVB080−20	44,000	12.5	14.5
3655649	24ACC648A**30	CAP**4824A**	58UVB100−20	44,500	12.5	14.5
3655652	24ACC648A**30	CAP**4824A**	58UVB120−20	44,500	12.5	14.5
3655638	24ACC648A**30	CAP**4824A**	58VLR120−20	44,000	12.5	15.0
3655641	24ACC648A**30	CAP**4824A**	58VMR120−20	44,000	12.5	14.5
4765127	24ACC648A**30	CAP**4824A**	59*N*A100V21**20	42,000	12.0	14.5
4765128	24ACC648A**30	CAP**4824A**	59*N*A120V24**22	42,000	12.5	15.2
4765129	24ACC648A**30	CAP**4824A**	59*P5A100E21**16	42,000	12.0	14.5
4765130	24ACC648A**30	CAP**4824A**	59*P5A120E24**22	44,500	12.5	15.2
3655655	24ACC648A**30	CAP**4824A**+TDR		45,000	12.0	14.0

See notes on page 46

COMBINATION RATINGS CONTINUED

AHRI Ref. No.	Model Number	Indoor Model	Furnace Model	Capacity	EER	SEER
3655657	24ACC648A**30	CAP**6021A**	58CV(A,X)090−16	45,000	13.0	15.0
3655659	24ACC648A**30	CAP**6021A**	58CV(A,X)110−20	45,000	13.0	15.2
3655663	24ACC648A**30	CAP**6021A**	58ME(B,C)080−16	45,500	12.5	14.5
3655665	24ACC648A**30	CAP**6021A**	58ME(B,C)100−20	45,500	13.0	15.5
3655670	24ACC648A**30	CAP**6021A**	58MV(B,C)080−20	45,000	12.5	14.5
3655672	24ACC648A**30	CAP**6021A**	58MV(B,C)100−20	45,000	12.5	14.5
3655675	24ACC648A**30	CAP**6021A**	58PH*090−16	45,500	13.0	15.2
3655677	24ACC648A**30	CAP**6021A**	58PH*110−20	45,500	13.0	15.5
3655685	24ACC648A**30	CAP**6021A**	58UVB080−20	45,000	12.5	14.5
3655687	24ACC648A**30	CAP**6021A**	58UVB100−20	45,000	12.5	14.5
3655679	24ACC648A**30	CAP**6021A**	58VLR120−20	45,000	13.0	15.0
3655681	24ACC648A**30	CAP**6021A**	58VMR120−20	45,000	12.5	15.0
4765131	24ACC648A**30	CAP**6021A**	59*N*A100V21**20	44,500	12.5	15.2
4765132	24ACC648A**30	CAP**6021A**	59*P5A100E21**16	45,000	12.5	15.2
3655689	24ACC648A**30	CAP**6021A**+TDR		45,500	12.5	14.0
3655691	24ACC648A**30	CAP**6024A**	58CV(A,X)110−20	45,000	13.0	15.0
3655693	24ACC648A**30	CAP**6024A**	58CV(A,X)135−22	45,500	13.0	15.5
3655695	24ACC648A**30	CAP**6024A**	58CV(A,X)155−22	45,500	13.0	15.5
3655697	24ACC648A**30	CAP**6024A**	58ME(B,C)100−20	45,500	13.0	15.5
3655699	24ACC648A**30	CAP**6024A**	58ME(B,C)120−20	45,500	13.0	15.5
3655702	24ACC648A**30	CAP**6024A**	58MV(B,C)080−20	45,000	12.5	14.5
3655704	24ACC648A**30	CAP**6024A**	58MV(B,C)100−20	45,000	12.5	14.5
3655706	24ACC648A**30	CAP**6024A**	58MV(B,C)120−20	45,000	13.0	15.2
3655709	24ACC648A**30	CAP**6024A**	58PH*090−16	45,500	13.0	15.2
3655711	24ACC648A**30	CAP**6024A**	58PH*110−20	45,500	13.0	15.5
3655713	24ACC648A**30	CAP**6024A**	58PH*135−20	45,500	13.0	15.0
3655720	24ACC648A**30	CAP**6024A**	58UVB080−20	45,000	12.5	14.5
3655722	24ACC648A**30	CAP**6024A**	58UVB100−20	45,000	12.5	14.5
3655724	24ACC648A**30	CAP**6024A**	58UVB120−20	45,000	13.0	15.2
3655715	24ACC648A**30	CAP**6024A**	58VLR120−20	45,000	13.0	15.5
3655717	24ACC648A**30	CAP**6024A**	58VMR120−20	45,000	12.5	15.0
4765133	24ACC648A**30	CAP**6024A**	59*N*A100V21**20	44,500	12.5	15.2
4765134	24ACC648A**30	CAP**6024A**	59*N*A120V24**22	44,500	12.7	15.5
4765135	24ACC648A**30	CAP**6024A**	59*P5A100E21**16	45,000	12.5	15.2
4765136	24ACC648A**30	CAP**6024A**	59*P5A120E24**22	45,000	12.7	15.5
3655726	24ACC648A**30	CAP**6024A**+TDR		45,500	12.5	14.0
3655728	24ACC648A**30	CAP**6025A**	58HDV080−−20	45,500	12.5	14.5
3655730	24ACC648A**30	CAP**6025A**	58HDV100−−20	45,500	13.0	15.0
4765141	24ACC648A**30	CAP**6025A**	59*N*A100V21**20	44,500	12.5	15.2
4765142	24ACC648A**30	CAP**6025A**	59*N*A120V24**22	44,500	12.7	15.5
4765143	24ACC648A**30	CAP**6025A**	59*P5A100E21**16	45,000	12.5	15.2
4765144	24ACC648A**30	CAP**6025A**	59*P5A120E24**22	45,000	12.7	15.5
3655732	24ACC648A**30	CAP**6025A**+TDR		45,500	12.5	14.0
3656068	24ACC648A**30	CNPH*4821A**	58CV(A,X)090−16	44,500	12.5	14.5
3656071	24ACC648A**30	CNPH*4821A**	58CV(A,X)110−20	44,500	12.5	14.5
3656074	24ACC648A**30	CNPH*4821A**	58CV(A,X)135−22	44,500	13.0	15.2
3656077	24ACC648A**30	CNPH*4821A**	58CV(A,X)155−22	44,500	13.0	15.2
4138423	24ACC648A**30	CNPH*4821A**	58HDV080−−20	44,500	12.5	14.5
4138424	24ACC648A**30	CNPH*4821A**	58HDV100−−20	44,500	12.5	15.0
3656084	24ACC648A**30	CNPH*4821A**	58ME(B,C)080−16	44,500	12.5	14.5
3656087	24ACC648A**30	CNPH*4821A**	58ME(B,C)100−20	45,000	13.0	15.2
3656089	24ACC648A**30	CNPH*4821A**	58ME(B,C)120−20	45,000	13.0	15.2
3656098	24ACC648A**30	CNPH*4821A**	58MV(B,C)080−20	44,000	12.5	14.5
3656101	24ACC648A**30	CNPH*4821A**	58MV(B,C)100−20	44,500	12.5	14.5
3656104	24ACC648A**30	CNPH*4821A**	58MV(B,C)120−20	44,500	12.5	14.5
3656112	24ACC648A**30	CNPH*4821A**	58PH*090−16	44,500	12.5	14.5
3656115	24ACC648A**30	CNPH*4821A**	58PH*110−20	44,500	13.0	15.2
3656117	24ACC648A**30	CNPH*4821A**	58PH*135−20	44,500	13.0	15.2
3656121	24ACC648A**30	CNPH*4821A**	58VLR120−20	44,500	12.5	15.0
3656125	24ACC648A**30	CNPH*4821A**	58VMR120−20	44,000	12.5	14.5
4765160	24ACC648A**30	CNPH*4821A**	59*N*A100V21**20	42,000	12.5	15.0
4765161	24ACC648A**30	CNPH*4821A**	59*N*A120V24**22	42,000	12.5	15.2
4765162	24ACC648A**30	CNPH*4821A**	59*P5A080E17**16	42,000	12.0	14.5
4765163	24ACC648A**30	CNPH*4821A**	59*P5A100E21**16	42,000	12.0	14.5
4765164	24ACC648A**30	CNPH*4821A**	59*P5A120E24**22	44,500	12.5	15.2
4138429	24ACC648A**30	CNPH*4821A**	OVLAAB060154	45,000	12.5	14.5
3656141	24ACC648A**30	CNPH*4821A**+TDR		45,000	12.0	14.0
3656144	24ACC648A**30	CNPH*6024A**	58CV(A,X)090−16	45,000	13.0	15.2
3656146	24ACC648A**30	CNPH*6024A**	58CV(A,X)110−20	45,000	13.0	15.2
3656148	24ACC648A**30	CNPH*6024A**	58CV(A,X)135−22	45,500	13.0	16.0
3656150	24ACC648A**30	CNPH*6024A**	58CV(A,X)155−22	45,500	13.0	16.0
4138425	24ACC648A**30	CNPH*6024A**	58HDV080−−20	45,500	12.5	15.0

See notes on page 46

COMBINATION RATINGS CONTINUED

AHRI Ref. No.	Model Number	Indoor Model	Furnace Model	Capacity	EER	SEER
4138426	24ACC648A**30	CNPH*6024A**	58HDV100−−20	45,000	13.0	15.0
3656154	24ACC648A**30	CNPH*6024A**	58ME(B,C)080−16	45,500	12.5	14.5
3656156	24ACC648A**30	CNPH*6024A**	58ME(B,C)100−20	44,500	13.0	16.0
3656158	24ACC648A**30	CNPH*6024A**	58ME(B,C)120−20	45,500	13.0	16.0
3656163	24ACC648A**30	CNPH*6024A**	58MV(B,C)080−20	45,000	13.0	15.0
3656165	24ACC648A**30	CNPH*6024A**	58MV(B,C)100−20	45,000	12.5	14.5
3656167	24ACC648A**30	CNPH*6024A**	58MV(B,C)120−20	45,000	13.0	15.2
3656171	24ACC648A**30	CNPH*6024A**	58PH*090−16	45,500	13.0	15.2
3656173	24ACC648A**30	CNPH*6024A**	58PH*110−20	45,500	13.0	16.0
3656175	24ACC648A**30	CNPH*6024A**	58PH*135−20	45,500	13.0	15.5
3656177	24ACC648A**30	CNPH*6024A**	58VLR120−20	45,000	13.0	15.5
3656179	24ACC648A**30	CNPH*6024A**	58VMR120−20	45,000	12.5	15.0
4765165	24ACC648A**30	CNPH*6024A**	59*N*A100V21**20	44,500	12.5	15.2
4765166	24ACC648A**30	CNPH*6024A**	59*N*A120V24**22	44,500	12.7	15.5
4765167	24ACC648A**30	CNPH*6024A**	59*P5A080E17**16	44,500	12.0	14.5
4765168	24ACC648A**30	CNPH*6024A**	59*P5A100E21**16	45,000	12.5	15.2
4765169	24ACC648A**30	CNPH*6024A**	59*P5A120E24**22	45,000	12.7	15.5
4138430	24ACC648A**30	CNPH*6024A**	OVLAAB060154	46,000	13.0	15.0
3656191	24ACC648A**30	CNPH*6024A**+TDR		45,500	12.5	14.0
3656192	24ACC648A**30	CNPH*6124A**	58CV(A,X)090−16	45,500	13.0	15.0
3656193	24ACC648A**30	CNPH*6124A**	58CV(A,X)110−20	45,500	13.0	15.0
3656194	24ACC648A**30	CNPH*6124A**	58CV(A,X)135−22	45,500	13.0	16.0
3656195	24ACC648A**30	CNPH*6124A**	58CV(A,X)155−22	45,500	13.0	16.0
4138427	24ACC648A**30	CNPH*6124A**	58HDV080−−20	45,500	12.5	15.0
4138428	24ACC648A**30	CNPH*6124A**	58HDV100−−20	45,500	13.0	15.0
3656196	24ACC648A**30	CNPH*6124A**	58ME(B,C)080−16	45,500	13.0	15.0
3656197	24ACC648A**30	CNPH*6124A**	58ME(B,C)100−20	45,500	13.0	16.0
3656198	24ACC648A**30	CNPH*6124A**	58ME(B,C)120−20	46,000	13.0	16.0
3656199	24ACC648A**30	CNPH*6124A**	58MV(B,C)080−20	45,000	12.5	15.0
3656200	24ACC648A**30	CNPH*6124A**	58MV(B,C)100−20	45,500	12.5	14.5
3656201	24ACC648A**30	CNPH*6124A**	58MV(B,C)120−20	45,500	13.0	15.0
3656202	24ACC648A**30	CNPH*6124A**	58PH*090−16	45,500	13.0	15.0
3656203	24ACC648A**30	CNPH*6124A**	58PH*110−20	45,500	13.0	16.0
3656204	24ACC648A**30	CNPH*6124A**	58PH*135−20	45,500	13.0	15.0
3656205	24ACC648A**30	CNPH*6124A**	58VLR120−20	45,000	13.0	15.5
3656206	24ACC648A**30	CNPH*6124A**	58VMR120−20	45,000	12.5	15.0
4765170	24ACC648A**30	CNPH*6124A**	59*N*A100V21**20	45,000	12.5	15.2
4765171	24ACC648A**30	CNPH*6124A**	59*N*A120V24**22	45,000	12.7	15.5
4765172	24ACC648A**30	CNPH*6124A**	59*P5A100E21**16	45,000	12.5	15.2
4765173	24ACC648A**30	CNPH*6124A**	59*P5A120E24**22	45,500	12.7	15.5
4138431	24ACC648A**30	CNPH*6124A**	OVLAAB060154	46,000	13.0	15.0
3656210	24ACC648A**30	CNPH*6124A**+TDR		46,000	12.5	14.5
3656537	24ACC648A**30	CNPV*4821A**	58CV(A,X)090−16	44,500	12.5	14.5
3656540	24ACC648A**30	CNPV*4821A**	58CV(A,X)110−20	44,500	12.5	14.5
4138416	24ACC648A**30	CNPV*4821A**	58HDV080−−20	44,500	12.5	14.5
3656547	24ACC648A**30	CNPV*4821A**	58ME(B,C)080−16	44,500	12.5	14.5
3656550	24ACC648A**30	CNPV*4821A**	58ME(B,C)100−20	45,000	13.0	15.2
3656559	24ACC648A**30	CNPV*4821A**	58MV(B,C)080−20	44,000	12.5	14.5
3656562	24ACC648A**30	CNPV*4821A**	58MV(B,C)100−20	44,500	12.5	14.5
3656567	24ACC648A**30	CNPV*4821A**	58PH*090−16	44,500	12.5	14.5
3656570	24ACC648A**30	CNPV*4821A**	58PH*110−20	44,500	13.0	15.0
3656585	24ACC648A**30	CNPV*4821A**	58UVB080−20	44,000	12.5	14.5
3656588	24ACC648A**30	CNPV*4821A**	58UVB100−20	44,500	12.5	14.5
3656574	24ACC648A**30	CNPV*4821A**	58VLR120−20	44,500	12.5	15.0
3656578	24ACC648A**30	CNPV*4821A**	58VMR120−20	44,000	12.5	14.5
4765145	24ACC648A**30	CNPV*4821A**	59*N*A100V21**20	42,000	12.5	15.0
4765146	24ACC648A**30	CNPV*4821A**	59*P5A080E17**16	42,000	12.0	14.5
4765147	24ACC648A**30	CNPV*4821A**	59*P5A100E21**16	42,000	12.0	14.5
3656591	24ACC648A**30	CNPV*4821A**+TDR		45,000	12.0	14.0
3656594	24ACC648A**30	CNPV*4824A**	58CV(A,X)110−20	44,500	12.5	14.5
3656597	24ACC648A**30	CNPV*4824A**	58CV(A,X)135−22	44,500	13.0	15.2
3656600	24ACC648A**30	CNPV*4824A**	58CV(A,X)155−22	44,500	13.0	15.2
4138417	24ACC648A**30	CNPV*4824A**	58HDV080−−20	44,500	12.5	14.5
4138418	24ACC648A**30	CNPV*4824A**	58HDV100−−20	44,500	12.5	15.0
3656603	24ACC648A**30	CNPV*4824A**	58ME(B,C)100−20	45,000	13.0	15.2
3656605	24ACC648A**30	CNPV*4824A**	58ME(B,C)120−20	45,000	13.0	15.2
3656610	24ACC648A**30	CNPV*4824A**	58MV(B,C)080−20	44,000	12.5	14.5
3656613	24ACC648A**30	CNPV*4824A**	58MV(B,C)100−20	44,500	12.5	14.5
3656616	24ACC648A**30	CNPV*4824A**	58MV(B,C)120−20	44,500	12.5	14.5
3656621	24ACC648A**30	CNPV*4824A**	58PH*090−16	44,500	12.5	14.5
3656624	24ACC648A**30	CNPV*4824A**	58PH*110−20	44,500	13.0	15.2
3656626	24ACC648A**30	CNPV*4824A**	58PH*135−20	44,500	13.0	15.2

See notes on page 46

COMBINATION RATINGS CONTINUED

AHRI Ref. No.	Model Number	Indoor Model	Furnace Model	Capacity	EER	SEER
3656637	24ACC648A**30	CNPV*4824A**	58UVB080−20	44,000	12.5	14.5
3656640	24ACC648A**30	CNPV*4824A**	58UVB100−20	44,500	12.5	14.5
3656643	24ACC648A**30	CNPV*4824A**	58UVB120−20	44,500	12.5	14.5
3656629	24ACC648A**30	CNPV*4824A**	58VLR120−20	44,500	12.5	15.0
3656632	24ACC648A**30	CNPV*4824A**	58VMR120−20	44,000	12.5	14.5
4765148	24ACC648A**30	CNPV*4824A**	59*N*A100V21**20	42,000	12.5	15.0
4765149	24ACC648A**30	CNPV*4824A**	59*N*A120V24**22	42,000	12.5	15.2
4765150	24ACC648A**30	CNPV*4824A**	59*P5A100E21**16	42,000	12.0	14.5
4765151	24ACC648A**30	CNPV*4824A**	59*P5A120E24**22	44,500	12.5	15.2
3656646	24ACC648A**30	CNPV*4824A**+TDR		45,000	12.0	14.0
3656648	24ACC648A**30	CNPV*6024A**	58CV(A,X)110−20	45,000	13.0	15.2
3656650	24ACC648A**30	CNPV*6024A**	58CV(A,X)135−22	45,500	13.0	15.5
3656652	24ACC648A**30	CNPV*6024A**	58CV(A,X)155−22	45,500	13.0	16.0
4138419	24ACC648A**30	CNPV*6024A**	58HDV080−−20	45,500	12.5	15.0
4138420	24ACC648A**30	CNPV*6024A**	58HDV100−−20	45,000	13.0	15.0
3656654	24ACC648A**30	CNPV*6024A**	58ME(B,C)100−20	45,500	13.0	15.5
3656656	24ACC648A**30	CNPV*6024A**	58ME(B,C)120−20	45,500	13.0	15.5
3656659	24ACC648A**30	CNPV*6024A**	58MV(B,C)080−20	45,000	13.0	15.0
3656661	24ACC648A**30	CNPV*6024A**	58MV(B,C)100−20	45,000	12.5	14.5
3656663	24ACC648A**30	CNPV*6024A**	58MV(B,C)120−20	45,000	13.0	15.2
3656666	24ACC648A**30	CNPV*6024A**	58PH*090−16	45,500	13.0	15.2
3656668	24ACC648A**30	CNPV*6024A**	58PH*110−20	45,500	13.0	15.5
3656670	24ACC648A**30	CNPV*6024A**	58PH*135−20	45,500	13.0	15.5
3656677	24ACC648A**30	CNPV*6024A**	58UVB080−20	45,000	13.0	15.0
3656679	24ACC648A**30	CNPV*6024A**	58UVB100−20	45,000	12.5	14.5
3656681	24ACC648A**30	CNPV*6024A**	58UVB120−20	45,000	13.0	15.2
3656672	24ACC648A**30	CNPV*6024A**	58VLR120−20	45,000	13.0	15.5
3656674	24ACC648A**30	CNPV*6024A**	58VMR120−20	45,000	12.5	15.0
4765152	24ACC648A**30	CNPV*6024A**	59*N*A100V21**20	44,500	12.5	15.2
4765153	24ACC648A**30	CNPV*6024A**	59*N*A120V24**22	44,500	12.7	15.5
4765154	24ACC648A**30	CNPV*6024A**	59*P5A100E21**16	45,000	12.5	15.2
4765155	24ACC648A**30	CNPV*6024A**	59*P5A120E24**22	45,000	12.7	15.5
3656683	24ACC648A**30	CNPV*6024A**+TDR		45,500	12.5	14.0
3656684	24ACC648A**30	CNPV*6124A**	58CV(A,X)110−20	46,000	13.0	16.0
3656685	24ACC648A**30	CNPV*6124A**	58CV(A,X)135−22	46,000	13.0	16.0
3656686	24ACC648A**30	CNPV*6124A**	58CV(A,X)155−22	46,000	13.0	16.0
4138421	24ACC648A**30	CNPV*6124A**	58HDV080−−20	46,000	13.0	15.5
4138422	24ACC648A**30	CNPV*6124A**	58HDV100−−20	46,000	13.0	15.5
3656687	24ACC648A**30	CNPV*6124A**	58ME(B,C)100−20	46,000	13.0	16.0
3656688	24ACC648A**30	CNPV*6124A**	58ME(B,C)120−20	46,500	13.0	16.0
3656689	24ACC648A**30	CNPV*6124A**	58MV(B,C)080−20	45,500	13.0	15.2
3656690	24ACC648A**30	CNPV*6124A**	58MV(B,C)100−20	46,000	13.0	15.2
3656691	24ACC648A**30	CNPV*6124A**	58MV(B,C)120−20	46,000	13.0	16.0
3656692	24ACC648A**30	CNPV*6124A**	58PH*090−16	46,000	13.0	16.0
3656693	24ACC648A**30	CNPV*6124A**	58PH*110−20	46,000	13.0	16.0
3656694	24ACC648A**30	CNPV*6124A**	58PH*135−20	46,000	13.0	16.0
3656697	24ACC648A**30	CNPV*6124A**	58UVB080−20	45,500	13.0	15.2
3656698	24ACC648A**30	CNPV*6124A**	58UVB100−20	46,000	13.0	15.2
3656699	24ACC648A**30	CNPV*6124A**	58UVB120−20	45,500	13.0	15.5
3656695	24ACC648A**30	CNPV*6124A**	58VLR120−20	45,500	13.0	16.0
3656696	24ACC648A**30	CNPV*6124A**	58VMR120−20	45,500	13.0	15.5
4765156	24ACC648A**30	CNPV*6124A**	59*N*A100V21**20	45,000	12.7	15.5
4765157	24ACC648A**30	CNPV*6124A**	59*N*A120V24**22	45,000	13.0	16.0
4765158	24ACC648A**30	CNPV*6124A**	59*P5A100E21**16	45,500	12.7	15.5
4765159	24ACC648A**30	CNPV*6124A**	59*P5A120E24**22	46,000	13.0	16.0
3656949	24ACC648A**30	CSPH*4812A**	58CV(A,X)090−16	45,000	12.5	14.5
3656952	24ACC648A**30	CSPH*4812A**	58CV(A,X)110−20	45,000	12.5	14.5
3656955	24ACC648A**30	CSPH*4812A**	58CV(A,X)135−22	45,000	13.0	15.0
3656958	24ACC648A**30	CSPH*4812A**	58CV(A,X)155−22	45,000	13.0	15.0
3656960	24ACC648A**30	CSPH*4812A**	58HDV080−−20	45,000	12.5	14.5
3656962	24ACC648A**30	CSPH*4812A**	58HDV100−−20	45,000	12.5	14.5
3656969	24ACC648A**30	CSPH*4812A**	58ME(B,C)080−16	45,000	12.5	14.5
3656972	24ACC648A**30	CSPH*4812A**	58ME(B,C)100−20	45,000	13.0	15.0
3656974	24ACC648A**30	CSPH*4812A**	58ME(B,C)120−20	45,000	13.0	15.0
3656983	24ACC648A**30	CSPH*4812A**	58MV(B,C)080−20	44,500	12.5	14.5
3656986	24ACC648A**30	CSPH*4812A**	58MV(B,C)100−20	45,000	12.5	14.5
3656989	24ACC648A**30	CSPH*4812A**	58MV(B,C)120−20	45,000	12.5	14.5
3656997	24ACC648A**30	CSPH*4812A**	58PH*090−16	45,000	13.0	15.0
3657000	24ACC648A**30	CSPH*4812A**	58PH*110−20	45,000	13.0	15.0
3657002	24ACC648A**30	CSPH*4812A**	58PH*135−20	45,000	13.0	15.0
3657006	24ACC648A**30	CSPH*4812A**	58VLR120−20	44,500	12.5	15.0
3657010	24ACC648A**30	CSPH*4812A**	58VMR120−20	44,500	12.5	14.5

See notes on page 46

COMBINATION RATINGS CONTINUED

AHRI Ref. No.	Model Number	Indoor Model	Furnace Model	Capacity	EER	SEER
4765174	24ACC648A**30	CSPH*4812A**	59*N*A100V21**20	44,500	12.5	15.0
4765175	24ACC648A**30	CSPH*4812A**	59*N*A120V24**22	44,500	12.5	15.2
4765176	24ACC648A**30	CSPH*4812A**	59*P5A100E21**16	44,500	12.5	15.0
4765177	24ACC648A**30	CSPH*4812A**	59*P5A120E24**22	44,500	12.5	15.2
4138432	24ACC648A**30	CSPH*4812A**	OVLAAB060154	45,500	12.5	14.5
3657026	24ACC648A**30	CSPH*4812A**+TDR		45,500	12.0	14.0
3657029	24ACC648A**30	CSPH*6012A**	58CV(A,X)090−16	45,500	13.0	15.0
3657031	24ACC648A**30	CSPH*6012A**	58CV(A,X)110−20	45,500	13.0	15.5
3657033	24ACC648A**30	CSPH*6012A**	58CV(A,X)135−22	45,500	13.0	16.0
3657035	24ACC648A**30	CSPH*6012A**	58CV(A,X)155−22	45,500	13.0	16.0
3657036	24ACC648A**30	CSPH*6012A**	58HDV080−−20	46,000	13.0	14.5
3657037	24ACC648A**30	CSPH*6012A**	58HDV100−−20	45,500	13.0	15.0
3657041	24ACC648A**30	CSPH*6012A**	58ME(B,C)080−16	45,500	13.0	15.0
3657043	24ACC648A**30	CSPH*6012A**	58ME(B,C)100−20	46,000	13.0	16.0
3657045	24ACC648A**30	CSPH*6012A**	58ME(B,C)120−20	46,000	13.0	16.0
3657050	24ACC648A**30	CSPH*6012A**	58MV(B,C)080−20	45,000	13.0	15.0
3657052	24ACC648A**30	CSPH*6012A**	58MV(B,C)100−20	45,500	13.0	15.0
3657054	24ACC648A**30	CSPH*6012A**	58MV(B,C)120−20	45,500	13.0	15.0
3657058	24ACC648A**30	CSPH*6012A**	58PH*090−16	45,500	13.0	15.0
3657060	24ACC648A**30	CSPH*6012A**	58PH*110−20	46,000	13.0	16.0
3657062	24ACC648A**30	CSPH*6012A**	58PH*135−20	46,000	13.0	16.0
3657064	24ACC648A**30	CSPH*6012A**	58VLR120−20	45,000	13.0	15.5
3657066	24ACC648A**30	CSPH*6012A**	58VMR120−20	45,000	13.0	15.0
4765178	24ACC648A**30	CSPH*6012A**	59*N*A100V21**20	45,000	12.7	15.5
4765179	24ACC648A**30	CSPH*6012A**	59*N*A120V24**22	45,000	12.7	15.5
4765180	24ACC648A**30	CSPH*6012A**	59*P5A080E17**16	45,000	12.5	15.0
4765181	24ACC648A**30	CSPH*6012A**	59*P5A100E21**16	45,000	12.5	15.2
4765182	24ACC648A**30	CSPH*6012A**	59*P5A120E24**22	45,500	12.7	15.5
4138433	24ACC648A**30	CSPH*6012A**	OVLAAB048112	45,000	12.5	14.5
4138434	24ACC648A**30	CSPH*6012A**	OVLAAB060154	46,000	13.0	15.5
3657076	24ACC648A**30	CSPH*6012A**+TDR		46,000	12.5	14.5
3804436	24ACC648A**30	FB4CNF048		44,500	12.0	14.0
3693338	24ACC648A**30	FB4CNF048+TXV		45,000	12.5	14.5
3804437	24ACC648A**30	FB4CNF060		46,000	13.0	15.0
3657084	24ACC648A**30	FE4AN(B,F)005+UI		45,500	13.0	15.5
3657087	24ACC648A**30	FE4ANB006+UI		46,000	13.0	16.0
3657133	24ACC648A**30	FV4CN(B,F)005		45,500	13.0	15.5
3657136	24ACC648A**30	FV4CNB006		46,000	13.0	16.0
3657165	24ACC648A**30	FX4DN(B,F)049		46,000	13.0	15.5
3657166	24ACC648A**30	FX4DN(B,F)061		46,500	13.0	16.0
3657186	24ACC648A**30	FY5BNB060		46,000	12.0	14.0
3804438	24ACC648A**30	FY5BNF048		45,500	12.5	14.5
3693346	24ACC648A**30	FY5BNF048+TXV		45,500	12.5	14.5
3677590	24ACC660A**30	†CNPV*6124A**+TDR		55,000	12.5	14.5
3677592	24ACC660A**30	CAP**6021A**	58CV(A,X)110−20	53,500	12.5	15.0
3677594	24ACC660A**30	CAP**6021A**	58ME(B,C)100−20	53,500	13.0	15.2
3677593	24ACC660A**30	CAP**6021A**	58PH*110−20	53,500	13.0	15.5
3677591	24ACC660A**30	CAP**6021A**+TDR		53,500	12.5	14.5
3677646	24ACC660A**30	CAP**6024A**	58CV(A,X)110−20	53,500	13.0	15.2
3677596	24ACC660A**30	CAP**6024A**	58CV(A,X)135−22	53,500	13.0	15.5
3677597	24ACC660A**30	CAP**6024A**	58CV(A,X)155−22	54,000	13.0	15.5
3677648	24ACC660A**30	CAP**6024A**	58ME(B,C)100−20	53,500	13.0	15.2
3677599	24ACC660A**30	CAP**6024A**	58ME(B,C)120−20	53,500	13.0	15.5
3677647	24ACC660A**30	CAP**6024A**	58PH*110−20	53,500	13.0	15.5
3677598	24ACC660A**30	CAP**6024A**	58PH*135−20	53,500	13.0	15.2
3677649	24ACC660A**30	CAP**6024A**	58VLR120−20	53,500	12.5	15.0
4765183	24ACC660A**30	CAP**6024A**	59*N*A120V24**22	53,500	12.7	15.5
4765184	24ACC660A**30	CAP**6024A**	59*P5A120E24**22	53,500	12.7	15.5
3677595	24ACC660A**30	CAP**6024A**+TDR		54,500	12.5	14.5
4765185	24ACC660A**30	CAP**6025A**	59*N*A120V24**22	53,500	12.7	15.5
4765186	24ACC660A**30	CAP**6025A**	59*P5A120E24**22	53,500	12.7	15.5
3677600	24ACC660A**30	CAP**6025A**+TDR		54,500	12.5	14.5
3677612	24ACC660A**30	CNPH*6024A**	58CV(A,X)110−20	53,500	13.0	15.2
3677613	24ACC660A**30	CNPH*6024A**	58CV(A,X)135−22	53,500	13.0	15.5
3677614	24ACC660A**30	CNPH*6024A**	58CV(A,X)155−22	54,000	13.0	15.5
3677617	24ACC660A**30	CNPH*6024A**	58ME(B,C)080−16	53,000	12.5	15.0
3677618	24ACC660A**30	CNPH*6024A**	58ME(B,C)100−20	53,500	13.0	15.2
3677619	24ACC660A**30	CNPH*6024A**	58ME(B,C)120−20	53,500	13.0	15.5
3677615	24ACC660A**30	CNPH*6024A**	58PH*110−20	54,000	13.0	15.5
3677616	24ACC660A**30	CNPH*6024A**	58PH*135−20	53,500	13.0	15.2
3677658	24ACC660A**30	CNPH*6024A**	58VLR120−20	53,500	12.5	15.0

See notes on page 46

COMBINATION RATINGS CONTINUED

AHRI Ref. No.	Model Number	Indoor Model	Furnace Model	Capacity	EER	SEER
4765191	24ACC660A**30	CNPH*6024A**	59*N*A120V24**22	53,500	12.7	15.5
4765192	24ACC660A**30	CNPH*6024A**	59*P5A120E24**22	53,500	12.7	15.5
3677611	24ACC660A**30	CNPH*6024A**+TDR		54,500	12.5	14.5
3677621	24ACC660A**30	CNPH*6124A**	58CV(A,X)110−20	54,000	13.0	15.2
3677622	24ACC660A**30	CNPH*6124A**	58CV(A,X)135−22	54,000	13.0	15.5
3677623	24ACC660A**30	CNPH*6124A**	58CV(A,X)155−22	54,000	13.0	15.5
3677626	24ACC660A**30	CNPH*6124A**	58ME(B,C)100−20	53,500	13.0	15.2
3677627	24ACC660A**30	CNPH*6124A**	58ME(B,C)120−20	54,000	13.0	15.5
3677624	24ACC660A**30	CNPH*6124A**	58PH*110−20	54,000	13.0	15.5
3677625	24ACC660A**30	CNPH*6124A**	58PH*135−20	53,500	13.0	15.2
4765193	24ACC660A**30	CNPH*6124A**	59*N*A120V24**22	53,500	12.7	15.5
4765194	24ACC660A**30	CNPH*6124A**	59*P5A120E24**22	53,500	12.7	15.5
3677620	24ACC660A**30	CNPH*6124A**+TDR		54,000	12.5	14.5
3677655	24ACC660A**30	CNPV*6024A**	58CV(A,X)110−20	53,500	12.5	15.2
3677602	24ACC660A**30	CNPV*6024A**	58CV(A,X)135−22	53,500	13.0	15.5
3677603	24ACC660A**30	CNPV*6024A**	58CV(A,X)155−22	54,000	13.0	15.5
3677605	24ACC660A**30	CNPV*6024A**	58ME(B,C)120−20	53,500	13.0	15.5
3677656	24ACC660A**30	CNPV*6024A**	58PH*110−20	54,000	13.0	15.5
3677604	24ACC660A**30	CNPV*6024A**	58PH*135−20	53,500	13.0	15.2
3677657	24ACC660A**30	CNPV*6024A**	58VLR120−20	53,500	12.5	15.0
4765187	24ACC660A**30	CNPV*6024A**	59*N*A120V24**22	53,500	12.7	15.5
4765188	24ACC660A**30	CNPV*6024A**	59*P5A120E24**22	53,500	12.7	15.5
3677601	24ACC660A**30	CNPV*6024A**+TDR		54,500	12.5	14.5
3677650	24ACC660A**30	CNPV*6124A**	58CV(A,X)110−20	54,500	13.0	15.2
3677607	24ACC660A**30	CNPV*6124A**	58CV(A,X)135−22	54,500	13.0	16.0
3677608	24ACC660A**30	CNPV*6124A**	58CV(A,X)155−22	54,500	13.0	16.0
3677652	24ACC660A**30	CNPV*6124A**	58ME(B,C)100−20	54,000	13.0	15.5
3677610	24ACC660A**30	CNPV*6124A**	58ME(B,C)120−20	54,500	13.0	16.0
3677606	24ACC660A**30	CNPV*6124A**	58MV(B,C)120−20	54,000	13.0	15.2
3677651	24ACC660A**30	CNPV*6124A**	58PH*110−20	54,500	13.0	15.5
3677609	24ACC660A**30	CNPV*6124A**	58PH*135−20	54,500	13.0	15.5
3677659	24ACC660A**30	CNPV*6124A**	58UVB120−20	54,000	13.0	15.2
3677653	24ACC660A**30	CNPV*6124A**	58VLR120−20	54,500	13.0	15.2
4765189	24ACC660A**30	CNPV*6124A**	59*N*A120V24**22	54,000	12.7	15.5
4765190	24ACC660A**30	CNPV*6124A**	59*P5A120E24**22	54,000	12.7	15.5
3677630	24ACC660A**30	CSPH*6012A**	58CV(A,X)110−20	54,000	13.0	15.2
3677631	24ACC660A**30	CSPH*6012A**	58CV(A,X)135−22	54,000	13.0	15.5
3677632	24ACC660A**30	CSPH*6012A**	58CV(A,X)155−22	54,000	13.0	16.0
3677635	24ACC660A**30	CSPH*6012A**	58ME(B,C)080−16	53,500	13.0	15.2
3677636	24ACC660A**30	CSPH*6012A**	58ME(B,C)100−20	54,000	13.0	15.5
3677637	24ACC660A**30	CSPH*6012A**	58ME(B,C)120−20	54,000	13.0	16.0
3677629	24ACC660A**30	CSPH*6012A**	58MV(B,C)120−20	53,500	13.0	15.2
3677633	24ACC660A**30	CSPH*6012A**	58PH*110−20	54,000	13.0	15.5
3677634	24ACC660A**30	CSPH*6012A**	58PH*135−20	54,000	13.0	15.5
3677654	24ACC660A**30	CSPH*6012A**	58VLR120−20	54,000	13.0	15.2
4765195	24ACC660A**30	CSPH*6012A**	59*N*A120V24**22	54,000	12.7	15.5
4765196	24ACC660A**30	CSPH*6012A**	59*P5A120E24**22	54,000	12.7	15.5
3677628	24ACC660A**30	CSPH*6012A**+TDR		54,500	12.5	14.5
3804439	24ACC660A**30	FB4CNF060		54,000	12.5	14.5
3677641	24ACC660A**30	FE4ANB006+UI		54,500	13.5	16.0
3677643	24ACC660A**30	FV4CNB006		54,500	13.5	16.0
3677640	24ACC660A**30	FX4DN(B,F)061		55,000	13.0	15.5
3677639	24ACC660A**30	FY5BNB060		54,000	12.0	13.5

† Tested combination
EER — Energy Efficiency Ratio
SEER — Seasonal Energy Efficiency Ratio
TDR — Time−Delay Relay. In most cases, only 1 method should be used to achieve TDR function. Using more than 1 method in a system may cause degradation in performance. Use either the accessory Time−Delay Relay KAATD0101TDR or a furnace equipped with TDR. Most Carrier furnaces are equipped with TDR.
TXV — Thermostatic Expansion Valve
UI — User Interface
NOTES:
1. Ratings are net values reflecting the effects of circulating fan motor heat. Supplemental electric heat is not included.
2. Tested outdoor/indoor combinations have been tested in accordance with DOE test procedures for central air conditioners. Ratings for other combinations are determined under DOE computer simulation procedures.
3. Determine actual CFM values obtainable for your system by referring to fan performance data in fan coil or furnace coil literature.
4. Do not apply with capillary tube coils as performance and reliability are affected.

DETAILED COOLING CAPACITIES#

EVAPORATOR AIR		CONDENSER ENTERING AIR TEMPERATURES °F (°C)																	
		75 (23.9)			85 (29.4)			95 (35)			105 (40.6)			115 (46.1)			125 (51.7)		
CFM	EWB °F (°C)	Capacity MBtuh		Total System KW**	Capacity MBtuh		Total System KW**	Capacity MBtuh		Total System KW**	Capacity MBtuh		Total System KW**	Capacity MBtuh		Total System KW**	Capacity MBtuh		Total System KW**
		Total	Sens‡		Total	Sens‡		Total	Sens‡		Total	Sens‡		Total	Sens‡		Total	Sens‡	
24ACC618A**30 Outdoor Section With CNPV*1917A** Indoor Section																			
525	57 (13.9)	21.52	10.39	1.18	20.55	10.05	1.32	19.48	9.68	1.48	18.35	9.29	1.65	17.15	8.88	1.84	15.88	8.46	2.06
	62 (16.7)	19.59	12.69	1.18	18.66	12.32	1.32	17.68	11.95	1.47	16.64	11.56	1.64	15.54	11.14	1.83	14.37	10.72	2.05
	63 (17.2)††	18.14	12.20	1.18	17.28	11.84	1.32	16.37	11.47	1.47	15.40	11.07	1.63	14.37	10.66	1.82	13.27	10.22	2.04
	67 (19.4)	17.80	14.92	1.18	16.97	14.56	1.31	16.08	14.18	1.47	15.17	13.78	1.63	14.30	14.30	1.82	13.42	13.42	2.04
	72 (22.2)	17.19	17.19	1.18	16.54	16.54	1.31	15.84	15.84	1.46	15.09	15.09	1.63	14.27	14.27	1.82	13.40	13.40	2.04
600	57 (13.9)	21.94	10.93	1.21	20.92	10.58	1.35	19.82	10.21	1.51	18.63	9.81	1.68	17.39	9.40	1.87	16.07	8.97	2.09
	62 (16.7)	19.99	13.55	1.20	19.03	13.19	1.35	18.00	12.80	1.50	16.92	12.40	1.67	15.78	11.98	1.86	14.57	11.54	2.08
	63 (17.2)††	18.55	13.02	1.20	17.64	12.65	1.34	16.68	12.26	1.49	15.68	11.86	1.66	14.60	11.44	1.85	13.47	10.99	2.07
	67 (19.4)	18.25	16.11	1.20	17.39	15.72	1.34	16.55	16.55	1.49	15.74	15.74	1.66	14.87	14.87	1.85	13.93	13.93	2.07
	72 (22.2)	17.99	17.99	1.20	17.28	17.28	1.34	16.53	16.53	1.49	15.72	15.72	1.66	14.85	14.85	1.85	13.91	13.91	2.07
675	57 (13.9)	22.24	11.45	1.23	21.19	11.09	1.38	20.06	10.72	1.54	18.83	10.32	1.71	17.55	9.90	1.90	16.20	9.47	2.12
	62 (16.7)	20.29	14.38	1.23	19.30	14.01	1.37	18.24	13.62	1.53	17.13	13.22	1.70	15.95	12.79	1.89	14.72	12.34	2.10
	63 (17.2)††	18.85	13.79	1.23	17.91	13.42	1.37	16.92	13.03	1.52	15.88	12.61	1.69	14.78	12.18	1.88	13.63	11.73	2.10
	67 (19.4)	18.68	18.68	1.23	17.93	17.93	1.37	17.12	17.12	1.52	16.26	16.26	1.69	15.33	15.33	1.88	14.35	14.35	2.10
	72 (22.2)	18.66	18.66	1.23	17.90	17.90	1.37	17.09	17.09	1.52	16.24	16.24	1.69	15.31	15.31	1.88	14.33	14.33	2.10

COOLING INDOOR MODEL	CAPACITY	POWER	FURNACE MODEL
*CNPV*1917A**	1.00	1.00	
CAP**1814A**	1.00	1.04	
CAP**2414A**	1.00	1.04	
CAP**2417A**	1.00	1.04	
CNPF*2418A**	1.00	1.04	
CNPH*2417A**	1.00	1.00	
CNPV*1814A**	1.00	1.04	
CNPV*2414A**	1.00	1.04	
CNPV*2417A**	1.00	1.04	
CSPH*2412A**	1.00	1.00	
FB4CNF018	1.00	0.92	
FB4CNF018	1.00	0.96	
FB4CNF024	1.00	0.92	
FB4CNF024	1.00	0.96	
FE4ANF002	1.00	0.92	
FF1ENP018	1.00	1.04	
FF1ENP019	1.00	0.96	
FF1ENP024	1.00	1.04	
FF1ENP025	1.00	0.92	
FV4BNF002	1.06	0.96	
FV4CNF002	1.00	0.92	
FX4CNF018	1.05	0.99	
FX4CNF024	1.06	0.98	
FX4DNF019	1.00	0.92	
FX4DNF025	1.00	0.92	
FY4ANF018	1.03	1.08	
FY4ANF024	1.04	1.08	
FY5BNF018	1.00	1.00	
FY5BNF018	1.00	1.00	
FY5BNF024	1.00	1.00	
FY5BNF024	1.00	1.00	
CAP**1814A**	1.00	0.96	58CV(A,X)070–12
CAP**2414A**	1.00	0.92	58CV(A,X)070–12
CAP**2417A**	1.00	0.92	58CV(A,X)070–12
CNPH*2417A**	1.00	0.92	58CV(A,X)070–12

COOLING INDOOR MODEL	CAPACITY	POWER	FURNACE MODEL
CNPV*1814A**	1.00	0.92	58CV(A,X)070–12
CNPV*1917A**	1.00	0.92	58CV(A,X)070–12
CNPV*2414A**	1.00	0.92	58CV(A,X)070–12
CNPV*2417A**	1.00	0.92	58CV(A,X)070–12
CNPV*3014A**	1.00	0.92	58CV(A,X)070–12
CSPH*2412A**	1.00	0.92	58CV(A,X)070–12
CAP**2417A**	1.00	0.92	58CV(A,X)090–16
CNPH*2417A**	1.00	0.92	58CV(A,X)090–16
CNPV*1917A**	1.00	0.92	58CV(A,X)090–16
CNPV*2417A**	1.00	0.92	58CV(A,X)090–16
CSPH*2412A**	1.00	0.92	58CV(A,X)090–16
CNPH*2417A**	1.02	0.94	58HDV040––12
CNPV*1917A**	1.04	0.96	58HDV040––12
CNPV*2417A**	1.02	0.94	58HDV040––12
CSPH*2412A**	1.00	0.92	58HDV040––12
CNPV*1917A**	1.04	0.96	58HDV060––12
CSPH*2412A**	1.00	0.92	58HDV060––12
CAP**2417A**	1.00	0.92	58ME(B,C)060–12
CNPH*2417A**	1.00	0.92	58ME(B,C)060–12
CNPV*1917A**	1.00	0.92	58ME(B,C)060–12
CNPV*2417A**	1.00	0.92	58ME(B,C)060–12
CSPH*2412A**	1.00	0.92	58ME(B,C)060–12
CAP**2417A**	1.00	0.92	58MEB040–12
CNPH*2417A**	1.00	0.92	58MEB040–12
CNPV*1917A**	1.00	0.92	58MEB040–12
CNPV*2417A**	1.00	0.92	58MEB040–12
CSPH*2412A**	1.00	0.92	58MEB040–12
CAP**2417A**	1.00	0.92	58MV(B,C)060–14
CNPH*2417A**	1.00	0.92	58MV(B,C)060–14
CNPV*1917A**	1.00	0.92	58MV(B,C)060–14
CNPV*2417A**	1.00	0.92	58MV(B,C)060–14
CNPV*3017A**	1.00	0.92	58MV(B,C)060–14
CSPH*2412A**	1.00	0.92	58MV(B,C)060–14
CNPH*2417A**	1.00	0.92	58MV(B,C)080–14
CSPH*2412A**	1.00	0.92	58MV(B,C)080–14

COOLING INDOOR MODEL	CAPACITY	POWER	FURNACE MODEL
CNPH*2417A**	1.00	0.92	58MVB040–14
CSPH*2412A**	1.00	0.92	58MVB040–14
CAP**1814A**	1.00	0.92	58PH*045–08
CAP**2414A**	1.00	0.92	58PH*045–08
CAP**2417A**	1.00	0.92	58PH*045–08
CNPH*2417A**	1.00	0.92	58PH*045–08
CNPV*1814A**	1.00	0.92	58PH*045–08
CNPV*1917A**	1.00	0.92	58PH*045–08
CNPV*2414A**	1.00	0.92	58PH*045–08
CNPV*2417A**	1.00	0.92	58PH*045–08
CSPH*2412A**	1.00	0.92	58PH*045–08
CAP**2417A**	1.00	0.92	58UVB060–14
CAP**2417A**	1.00	0.92	58UVB060–14
CNPV*1917A**	1.00	0.92	58UVB060–14
CNPV*1917A**	1.00	0.92	58UVB060–14
CNPV*2417A**	1.00	0.92	58UVB060–14
CNPV*2417A**	1.00	0.92	58UVB060–14
CNPV*3017A**	1.00	0.92	58UVB060–14
CNPV*3017A**	1.00	0.92	58UVB060–14
CAP**2417A**	1.00	0.92	58VLR105–12
CNPH*2417A**	1.00	0.92	58VLR105–12
CNPV*1917A**	1.00	0.92	58VLR105–12
CNPV*2417A**	1.00	0.92	58VLR105–12
CSPH*2412A**	1.00	0.92	58VLR105–12
CAP**2417A**	1.00	0.92	58VMR105–12
CNPH*2417A**	1.00	0.92	58VMR105–12
CNPV*1917A**	1.00	0.92	58VMR105–12
CNPV*2417A**	1.00	0.92	58VMR105–12
CSPH*2412A**	1.00	0.92	58VMR105–12
CAP**2417A**	1.00	0.92	59*N*A060V17**14
CNPH*2417A**	1.00	0.92	59*N*A060V17**14
CNPV*1917A**	1.00	0.92	59*N*A060V17**14
CNPV*2417A**	1.00	0.92	59*N*A060V17**14
CSPH*2412A**	1.00	0.92	59*N*A060V17**14
CAP**2417A**	1.00	0.92	59*N*A080V17**14

DETAILED COOLING CAPACITIES# (CONT.)

24ACC618A30 Outdoor Section With CNPV*1917A** Indoor Section**

COOLING INDOOR MODEL	CAPACITY	POWER	FURNACE MODEL
CNPH*2417A**	1.00	0.92	59*N*A080V17**14
CNPV*1917A**	1.00	0.92	59*N*A080V17**14
CNPV*2417A**	1.00	0.92	59*N*A080V17**14
CSPH*2412A**	1.00	0.92	59*N*A080V17**14
CAP**1814A**	1.00	0.96	59*P5A040E14**10
CAP**2414A**	1.00	0.94	59*P5A040E14**10
CAP**2417A**	1.00	0.94	59*P5A040E14**10
CNPH*2417A**	1.00	0.94	59*P5A040E14**10
CNPV*1814A**	1.00	0.94	59*P5A040E14**10
CNPV*1917A**	1.00	0.92	59*P5A040E14**10
CNPV*2414A**	1.00	0.94	59*P5A040E14**10
CNPV*2417A**	1.00	0.94	59*P5A040E14**10
CSPH*2412A**	1.00	0.94	59*P5A040E14**10
CAP**2417A**	1.00	0.92	OVLAAB036098
CNPH*2417A**	1.00	0.92	OVLAAB036098
CNPV*1917A**	1.00	0.92	OVLAAB036098
CNPV*2417A**	1.00	0.92	OVLAAB036098
CSPH*2412A**	1.00	0.92	OVLAAB036098
CAP**2417A**	1.00	0.92	OVMAAB036098
CNPH*2417A**	1.02	0.94	OVMAAB036098
CNPV*1917A**	1.02	0.94	OVMAAB036098
CNPV*2417A**	1.02	0.94	OVMAAB036098
CSPH*2412A**	1.02	0.94	OVMAAB036098

See notes on pg. 69

DETAILED COOLING CAPACITIES# (CONT.)

EVAPORATOR AIR		CONDENSER ENTERING AIR TEMPERATURES °F (°C)																	
		75 (23.9)			85 (29.4)			95 (35)			105 (40.6)			115 (46.1)			125 (51.7)		
CFM	EWB °F (°C)	Capacity MBtuh		Total System KW**	Capacity MBtuh		Total System KW**	Capacity MBtuh		Total System KW**	Capacity MBtuh		Total System KW**	Capacity MBtuh		Total System KW**	Capacity MBtuh		Total System KW**
		Total	Sens‡		Total	Sens‡		Total	Sens‡		Total	Sens‡		Total	Sens‡		Total	Sens‡	
24ACC624A**30 Outdoor Section With CNPV*3117A** Indoor Section																			
700	57 (13.9)	28.21	13.70	1.55	26.92	13.25	1.74	25.54	12.78	1.94	24.09	12.29	2.16	22.56	11.77	2.41	20.94	11.24	2.68
	62 (16.7)	25.63	16.78	1.55	24.44	16.32	1.73	23.19	15.85	1.93	21.87	15.36	2.15	20.47	14.84	2.39	18.98	14.29	2.67
	63 (17.2)††	23.72	16.13	1.55	22.62	15.67	1.73	21.46	15.20	1.92	20.22	14.70	2.14	18.91	14.18	2.38	17.52	13.62	2.67
	67 (19.4)	23.32	19.80	1.55	22.25	19.34	1.73	21.14	18.86	1.92	20.00	19.96	2.14	18.95	18.95	2.38	17.82	17.82	2.67
	72 (22.2)	22.68	22.68	1.55	21.84	21.84	1.73	20.93	20.93	1.92	19.96	19.96	2.14	18.92	18.92	2.38	17.79	17.79	2.67
800	57 (13.9)	28.72	14.43	1.58	27.38	13.97	1.77	25.95	13.49	1.98	24.44	12.99	2.20	22.85	12.47	2.44	21.17	11.93	2.72
	62 (16.7)	26.16	17.95	1.58	24.91	17.49	1.77	23.60	17.00	1.97	22.22	16.49	2.19	20.76	15.96	2.43	19.23	15.41	2.71
	63 (17.2)††	24.23	17.22	1.58	23.08	16.75	1.77	21.86	16.27	1.96	20.58	15.76	2.18	19.21	15.22	2.42	17.78	14.66	2.70
	67 (19.4)	23.91	21.38	1.58	22.85	22.74	1.77	21.85	21.85	1.96	20.81	20.81	2.18	19.69	19.69	2.42	18.49	18.49	2.71
	72 (22.2)	23.70	23.70	1.58	22.79	22.79	1.76	21.82	21.82	1.96	20.78	20.78	2.18	19.66	19.66	2.43	18.46	18.46	2.71
900	57 (13.9)	29.09	15.12	1.62	27.72	14.67	1.81	26.23	14.18	2.02	24.68	13.67	2.24	23.05	13.15	2.48	21.32	12.60	2.76
	62 (16.7)	26.54	19.08	1.62	25.25	18.60	1.81	23.90	18.11	2.01	22.48	17.59	2.22	20.98	17.05	2.47	19.42	16.48	2.75
	63 (17.2)††	24.61	18.27	1.62	23.42	17.79	1.80	22.16	17.30	2.00	20.84	16.78	2.22	19.45	16.23	2.46	17.98	15.65	2.74
	67 (19.4)	24.60	24.60	1.62	23.62	23.62	1.80	22.58	22.58	2.00	21.48	21.48	2.22	20.29	20.29	2.47	19.02	19.02	2.75
	72 (22.2)	24.56	24.56	1.62	23.59	23.59	1.80	22.55	22.55	2.00	21.45	21.45	2.22	20.27	20.27	2.47	18.99	18.99	2.75

COOLING INDOOR MODEL	CAPACITY	POWER	FURNACE MODEL
*CNPV*3117A**	1.00	1.00	
CAP**2414A**	0.97	1.02	
CAP**2417A**	0.97	1.02	
CAP**3014A**	0.98	1.03	
CAP**3017A**	0.98	1.03	
CAP**3614A**	0.98	1.03	
CAP**3617A**	0.98	1.03	
CAP**3619A**	0.98	1.03	
CAP**3621A**	0.98	1.03	
CNPF*2418A**	0.97	1.02	
CNPF*3618A**	0.98	1.03	
CNPH*2417A**	0.97	1.02	
CNPH*3017A**	0.98	1.03	
CNPH*3117A**	1.00	1.00	
CNPH*3617A**	0.98	1.03	
CNPV*1917A**	0.98	1.03	
CNPV*2414A**	0.97	1.02	
CNPV*2417A**	0.97	1.02	
CNPV*3014A**	0.98	1.03	
CNPV*3017A**	0.98	1.03	
CNPV*3617A**	0.98	1.03	
CNPV*3621A**	0.98	1.03	
CNPV*3717A**	1.02	1.02	
CSPH*2412A**	0.98	1.03	
CSPH*3012A**	0.98	1.03	
CSPH*3612A**	1.00	1.04	
FB4CNF024	0.97	0.97	
FB4CNF024	0.97	0.97	
FB4CNF030	0.99	0.92	
FB4CNF030	0.99	0.95	
FE4AN(B,F)003	0.98	0.91	
FE4ANF002	0.98	0.91	
FF1ENP024	0.97	1.01	
FF1ENP025	0.98	0.94	
FF1ENP030	0.97	1.01	

COOLING INDOOR MODEL	CAPACITY	POWER	FURNACE MODEL
FF1ENP031	0.98	0.94	
FF1ENP036	0.97	1.06	
FF1ENP037	0.99	0.95	
FV4BN(B,F)003	0.99	0.90	
FV4BNF002	0.99	0.90	
FV4CN(B,F)003	0.98	0.91	
FV4CNF002	0.98	0.91	
FX4CN(B,F)036	0.99	1.02	
FX4CNF024	0.99	0.95	
FX4CNF030	1.00	0.94	
FX4DN(B,F)031	1.00	0.96	
FX4DNF025	0.99	0.92	
FY4ANF024	0.97	1.02	
FY4ANF030	0.98	1.01	
FY4ANF036	0.98	1.04	
FY5BNF024	0.98	0.98	
FY5BNF024	0.98	0.98	
FY5BNF030	0.99	0.99	
FY5BNF030	0.99	0.99	
CAP**2414A**	0.97	0.93	58CV(A,X)070–12
CAP**2417A**	0.97	0.93	58CV(A,X)070–12
CAP**3014A**	0.97	0.89	58CV(A,X)070–12
CAP**3017A**	0.97	0.90	58CV(A,X)070–12
CAP**3614A**	0.97	0.90	58CV(A,X)070–12
CAP**3617A**	0.97	0.90	58CV(A,X)070–12
CNPH*2417A**	0.97	0.93	58CV(A,X)070–12
CNPH*3017A**	0.97	0.90	58CV(A,X)070–12
CNPH*3117A**	0.99	0.92	58CV(A,X)070–12
CNPH*3617A**	0.97	0.90	58CV(A,X)070–12
CNPV*1917A**	0.97	0.90	58CV(A,X)070–12
CNPV*2414A**	0.97	0.93	58CV(A,X)070–12
CNPV*2417A**	0.97	0.93	58CV(A,X)070–12
CNPV*3014A**	0.97	0.90	58CV(A,X)070–12
CNPV*3017A**	0.97	0.90	58CV(A,X)070–12
CNPV*3117A**	0.99	0.92	58CV(A,X)070–12

COOLING INDOOR MODEL	CAPACITY	POWER	FURNACE MODEL
CNPV*3617A**	0.97	0.90	58CV(A,X)070–12
CSPH*3012A**	0.97	0.90	58CV(A,X)070–12
CSPH*3612A**	0.99	0.92	58CV(A,X)070–12
CAP**2417A**	0.97	0.89	58CV(A,X)090–16
CAP**3017A**	0.97	0.90	58CV(A,X)090–16
CAP**3617A**	0.97	0.90	58CV(A,X)090–16
CAP**3621A**	0.97	0.90	58CV(A,X)090–16
CNPH*2417A**	0.97	0.89	58CV(A,X)090–16
CNPH*3017A**	0.97	0.90	58CV(A,X)090–16
CNPH*3117A**	0.99	0.92	58CV(A,X)090–16
CNPH*3617A**	0.97	0.90	58CV(A,X)090–16
CNPV*1917A**	0.97	0.90	58CV(A,X)090–16
CNPV*2417A**	0.97	0.89	58CV(A,X)090–16
CNPV*3017A**	0.97	0.90	58CV(A,X)090–16
CNPV*3117A**	0.99	0.92	58CV(A,X)090–16
CNPV*3617A**	0.97	0.90	58CV(A,X)090–16
CNPV*3621A**	0.97	0.90	58CV(A,X)090–16
CSPH*3012A**	0.98	0.91	58CV(A,X)090–16
CSPH*3612A**	0.99	0.92	58CV(A,X)090–16
CAP**3621A**	0.98	0.91	58CV(A,X)110–20
CNPH*2417A**	0.97	0.93	58CV(A,X)110–20
CNPH*3017A**	0.97	0.90	58CV(A,X)110–20
CNPH*3117A**	0.99	0.92	58CV(A,X)110–20
CNPH*3617A**	0.97	0.90	58CV(A,X)110–20
CNPV*3621A**	0.97	0.90	58CV(A,X)110–20
CSPH*3012A**	0.98	0.91	58CV(A,X)110–20
CSPH*3612A**	0.99	0.92	58CV(A,X)110–20
CNPH*2417A**	0.97	0.93	58CV(A,X)135–22
CNPH*3017A**	0.97	0.90	58CV(A,X)135–22
CNPH*3117A**	0.99	0.92	58CV(A,X)135–22
CNPH*3617A**	0.97	0.90	58CV(A,X)135–22
CSPH*3012A**	0.98	0.91	58CV(A,X)135–22
CSPH*3612A**	0.99	0.92	58CV(A,X)135–22
CNPH*2417A**	0.97	0.93	58CV(A,X)155–22
CNPH*3017A**	0.97	0.90	58CV(A,X)155–22

DETAILED COOLING CAPACITIES# (CONT.)

24ACC624A30 Outdoor Section With CNPV*3117A** Indoor Section**

COOLING INDOOR MODEL	CAPACITY	POWER	FURNACE MODEL
CNPH*3117A**	0.99	0.92	58CV(A,X)155–22
CNPH*3617A**	0.97	0.90	58CV(A,X)155–22
CSPH*3012A**	0.98	0.91	58CV(A,X)155–22
CSPH*3612A**	0.99	0.92	58CV(A,X)155–22
CAP**3619A**	0.99	0.95	58HDV040––12
CNPH*2417A**	0.98	0.94	58HDV040––12
CNPH*3017A**	0.99	0.95	58HDV040––12
CNPH*3117A**	1.02	0.94	58HDV040––12
CNPV*2417A**	0.98	0.94	58HDV040––12
CNPV*3017A**	0.99	0.95	58HDV040––12
CNPV*3117A**	1.02	0.94	58HDV040––12
CSPH*2412A**	0.98	0.92	58HDV040––12
CAP**3619A**	1.00	0.96	58HDV060––12
CNPH*3017A**	1.01	0.93	58HDV060––12
CNPH*3117A**	1.02	0.94	58HDV060––12
CNPV*3017A**	1.01	0.93	58HDV060––12
CNPV*3117A**	1.02	0.94	58HDV060––12
CSPH*2412A**	0.98	0.92	58HDV060––12
CAP**2417A**	0.99	0.92	58ME(B,C)060–12
CAP**3017A**	1.00	0.92	58ME(B,C)060–12
CAP**3617A**	1.01	0.93	58ME(B,C)060–12
CAP**3621A**	1.01	0.93	58ME(B,C)060–12
CNPH*2417A**	0.98	0.91	58ME(B,C)060–12
CNPH*3017A**	1.00	0.92	58ME(B,C)060–12
CNPH*3117A**	1.02	0.94	58ME(B,C)060–12
CNPH*3617A**	1.00	0.92	58ME(B,C)060–12
CNPV*1917A**	1.00	0.92	58ME(B,C)060–12
CNPV*2417A**	0.98	0.91	58ME(B,C)060–12
CNPV*3017A**	1.00	0.92	58ME(B,C)060–12
CNPV*3117A**	1.02	0.94	58ME(B,C)060–12
CNPV*3617A**	1.00	0.92	58ME(B,C)060–12
CNPV*3621A**	1.00	0.92	58ME(B,C)060–12
CSPH*3012A**	1.00	0.92	58ME(B,C)060–12
CSPH*3612A**	1.02	0.94	58ME(B,C)060–12
CAP**2417A**	0.98	0.91	58ME(B,C)080–12
CAP**3017A**	0.99	0.92	58ME(B,C)080–12
CAP**3617A**	1.00	0.92	58ME(B,C)080–12
CAP**3621A**	1.00	0.92	58ME(B,C)080–12
CNPH*2417A**	0.97	0.90	58ME(B,C)080–12
CNPH*3017A**	0.99	0.92	58ME(B,C)080–12
CNPH*3117A**	1.02	0.94	58ME(B,C)080–12
CNPH*3617A**	0.99	0.92	58ME(B,C)080–12
CNPV*2417A**	0.97	0.90	58ME(B,C)080–12
CNPV*3017A**	0.99	0.92	58ME(B,C)080–12
CNPV*3117A**	1.02	0.94	58ME(B,C)080–12
CNPV*3617A**	0.99	0.92	58ME(B,C)080–12
CNPV*3621A**	0.99	0.92	58ME(B,C)080–12
CSPH*3012A**	0.99	0.92	58ME(B,C)080–12
CSPH*3612A**	1.01	0.93	58ME(B,C)080–12
CAP**2417A**	0.99	0.92	58MEB040–12
CAP**3017A**	1.00	0.92	58MEB040–12
CAP**3617A**	1.00	0.92	58MEB040–12
CAP**3621A**	1.01	0.93	58MEB040–12
CNPH*2417A**	0.98	0.91	58MEB040–12
CNPH*3017A**	1.00	0.92	58MEB040–12
CNPH*3117A**	1.02	0.94	58MEB040–12

COOLING INDOOR MODEL	CAPACITY	POWER	FURNACE MODEL
CNPH*3617A**	1.00	0.92	58MEB040–12
CNPV*1917A**	1.00	0.92	58MEB040–12
CNPV*2417A**	0.98	0.91	58MEB040–12
CNPV*3017A**	1.00	0.92	58MEB040–12
CNPV*3117A**	1.02	0.94	58MEB040–12
CNPV*3617A**	1.00	0.92	58MEB040–12
CNPV*3621A**	1.00	0.92	58MEB040–12
CSPH*3012A**	1.02	0.94	58MEB040–12
CSPH*3612A**	1.02	0.94	58MEB040–12
CAP**2417A**	0.98	0.91	58MV(B,C)060–14
CAP**3017A**	0.98	0.91	58MV(B,C)060–14
CAP**3617A**	0.99	0.92	58MV(B,C)060–14
CAP**3621A**	0.99	0.92	58MV(B,C)060–14
CNPH*2417A**	0.97	0.94	58MV(B,C)060–14
CNPH*3017A**	0.98	0.91	58MV(B,C)060–14
CNPH*3117A**	1.01	0.93	58MV(B,C)060–14
CNPH*3617A**	0.98	0.91	58MV(B,C)060–14
CNPV*1917A**	0.99	0.92	58MV(B,C)060–14
CNPV*2417A**	0.97	0.94	58MV(B,C)060–14
CNPV*3017A**	0.98	0.91	58MV(B,C)060–14
CNPV*3117A**	1.01	0.93	58MV(B,C)060–14
CNPV*3617A**	0.98	0.91	58MV(B,C)060–14
CNPV*3621A**	0.98	0.91	58MV(B,C)060–14
CSPH*3012A**	0.99	0.92	58MV(B,C)060–14
CSPH*3612A**	1.01	0.93	58MV(B,C)060–14
CAP**3621A**	0.97	0.90	58MV(B,C)080–14
CNPH*2417A**	0.97	0.93	58MV(B,C)080–14
CNPH*3017A**	0.97	0.90	58MV(B,C)080–14
CNPH*3117A**	0.99	0.92	58MV(B,C)080–14
CNPH*3617A**	0.97	0.90	58MV(B,C)080–14
CNPV*3621A**	0.97	0.90	58MV(B,C)080–14
CSPH*3012A**	0.97	0.90	58MV(B,C)080–14
CSPH*3612A**	0.99	0.92	58MV(B,C)080–14
CAP**3621A**	0.97	0.89	58MV(B,C)080–20
CNPH*2417A**	0.96	0.92	58MV(B,C)080–20
CNPH*3017A**	0.97	0.89	58MV(B,C)080–20
CNPH*3117A**	0.98	0.91	58MV(B,C)080–20
CNPH*3617A**	0.97	0.89	58MV(B,C)080–20
CNPV*3621A**	0.97	0.89	58MV(B,C)080–20
CSPH*3012A**	0.97	0.89	58MV(B,C)080–20
CSPH*3612A**	0.98	0.91	58MV(B,C)080–20
CAP**3621A**	0.97	0.90	58MV(B,C)100–20
CNPH*2417A**	0.97	0.93	58MV(B,C)100–20
CNPH*3017A**	0.97	0.90	58MV(B,C)100–20
CNPH*3117A**	0.99	0.92	58MV(B,C)100–20
CNPH*3617A**	0.97	0.90	58MV(B,C)100–20
CNPV*3621A**	0.97	0.90	58MV(B,C)100–20
CSPH*3012A**	0.97	0.90	58MV(B,C)100–20
CSPH*3612A**	0.99	0.92	58MV(B,C)100–20
CNPH*2417A**	0.97	0.90	58MV(B,C)120–20
CNPH*3017A**	0.98	0.91	58MV(B,C)120–20
CNPH*3117A**	1.00	0.92	58MV(B,C)120–20
CNPH*3617A**	0.98	0.91	58MV(B,C)120–20
CSPH*3012A**	0.98	0.91	58MV(B,C)120–20
CSPH*3612A**	1.00	0.92	58MV(B,C)120–20
CNPH*2417A**	0.97	0.93	58MVB040–14

COOLING INDOOR MODEL	CAPACITY	POWER	FURNACE MODEL
CNPH*3017A**	0.97	0.90	58MVB040–14
CNPH*3117A**	0.99	0.92	58MVB040–14
CNPH*3617A**	0.97	0.90	58MVB040–14
CSPH*3012A**	0.97	0.90	58MVB040–14
CSPH*3612A**	0.99	0.92	58MVB040–14
CAP**2414A**	0.97	0.94	58PH*045–08
CAP**2417A**	0.97	0.94	58PH*045–08
CAP**3014A**	0.98	0.94	58PH*045–08
CAP**3017A**	0.98	0.91	58PH*045–08
CAP**3614A**	0.98	0.91	58PH*045–08
CAP**3617A**	0.99	0.92	58PH*045–08
CNPH*2417A**	0.97	0.94	58PH*045–08
CNPH*3017A**	0.98	0.91	58PH*045–08
CNPH*3117A**	1.01	0.93	58PH*045–08
CNPH*3617A**	0.98	0.91	58PH*045–08
CNPV*1917A**	0.98	0.91	58PH*045–08
CNPV*2414A**	0.97	0.94	58PH*045–08
CNPV*2417A**	0.97	0.94	58PH*045–08
CNPV*3014A**	0.98	0.94	58PH*045–08
CNPV*3017A**	0.98	0.91	58PH*045–08
CNPV*3117A**	1.01	0.93	58PH*045–08
CNPV*3617A**	0.98	0.91	58PH*045–08
CSPH*3012A**	0.98	0.91	58PH*045–08
CSPH*3612A**	1.00	0.92	58PH*045–08
CAP**2417A**	0.98	0.91	58UVB060–14
CAP**2417A**	0.98	0.91	58UVB060–14
CAP**3017A**	0.98	0.91	58UVB060–14
CAP**3017A**	0.98	0.91	58UVB060–14
CAP**3617A**	0.99	0.92	58UVB060–14
CAP**3617A**	0.99	0.92	58UVB060–14
CAP**3621A**	0.99	0.92	58UVB060–14
CAP**3621A**	0.99	0.92	58UVB060–14
CNPV*1917A**	0.99	0.92	58UVB060–14
CNPV*1917A**	0.99	0.92	58UVB060–14
CNPV*2417A**	0.97	0.94	58UVB060–14
CNPV*2417A**	0.97	0.94	58UVB060–14
CNPV*3017A**	0.98	0.91	58UVB060–14
CNPV*3017A**	0.98	0.91	58UVB060–14
CNPV*3117A**	1.01	0.93	58UVB060–14
CNPV*3117A**	1.01	0.93	58UVB060–14
CNPV*3617A**	0.98	0.91	58UVB060–14
CNPV*3617A**	0.98	0.91	58UVB060–14
CNPV*3621A**	0.98	0.91	58UVB060–14
CNPV*3621A**	0.98	0.91	58UVB060–14
CAP**3017A**	0.97	0.94	58UVB080–14
CAP**3621A**	0.97	0.90	58UVB080–14
CNPV*3621A**	0.97	0.90	58UVB080–14
CNPV*3621A**	0.97	0.90	58UVB080–14
CAP**3621A**	0.97	0.89	58UVB080–20
CAP**3621A**	0.97	0.89	58UVB080–20
CNPV*3621A**	0.97	0.89	58UVB080–20
CNPV*3621A**	0.97	0.89	58UVB080–20
CAP**3621A**	0.97	0.90	58UVB100–20
CAP**3621A**	0.97	0.90	58UVB100–20
CNPV*3621A**	0.97	0.90	58UVB100–20
CNPV*3621A**	0.97	0.90	58UVB100–20

DETAILED COOLING CAPACITIES# (CONT.)

24ACC624A30 Outdoor Section With CNPV*3117A** Indoor Section**

COOLING INDOOR MODEL	CAPACITY	POWER	FURNACE MODEL
CAP**2417A**	0.97	0.90	58VLR105–12
CAP**3017A**	0.98	0.91	58VLR105–12
CAP**3617A**	0.98	0.91	58VLR105–12
CAP**3621A**	0.99	0.92	58VLR105–12
CNPH*2417A**	0.97	0.90	58VLR105–12
CNPH*3017A**	0.98	0.91	58VLR105–12
CNPH*3117A**	1.00	0.92	58VLR105–12
CNPH*3617A**	0.98	0.91	58VLR105–12
CNPV*2417A**	0.97	0.90	58VLR105–12
CNPV*3017A**	0.98	0.91	58VLR105–12
CNPV*3117A**	1.00	0.92	58VLR105–12
CNPV*3617A**	0.98	0.91	58VLR105–12
CNPV*3621A**	0.98	0.91	58VLR105–12
CSPH*2412A**	0.99	0.92	58VLR105–12
CSPH*3012A**	0.99	0.92	58VLR105–12
CSPH*3612A**	1.00	0.92	58VLR105–12
CAP**2417A**	0.97	0.89	58VMR105–12
CAP**3017A**	0.97	0.90	58VMR105–12
CAP**3617A**	0.97	0.90	58VMR105–12
CAP**3621A**	0.97	0.90	58VMR105–12
CNPH*2417A**	0.97	0.93	58VMR105–12
CNPH*3017A**	0.97	0.90	58VMR105–12
CNPH*3117A**	0.99	0.92	58VMR105–12
CNPH*3617A**	0.97	0.90	58VMR105–12
CNPV*2417A**	0.97	0.93	58VMR105–12
CNPV*3017A**	0.97	0.90	58VMR105–12
CNPV*3117A**	0.99	0.92	58VMR105–12
CNPV*3617A**	0.97	0.90	58VMR105–12
CNPV*3621A**	0.97	0.90	58VMR105–12
CSPH*2412A**	0.97	0.94	58VMR105–12
CSPH*3012A**	0.97	0.90	58VMR105–12
CSPH*3612A**	0.99	0.92	58VMR105–12
CAP**2417A**	0.97	0.92	59*N*A060V17**14
CAP**3017A**	0.98	0.91	59*N*A060V17**14
CNPH*2417A**	0.97	0.92	59*N*A060V17**14
CNPH*3017A**	0.98	0.91	59*N*A060V17**14
CNPH*3117A**	1.00	0.92	59*N*A060V17**14
CNPV*2417A**	0.97	0.92	59*N*A060V17**14
CNPV*3017A**	0.98	0.91	59*N*A060V17**14
CNPV*3117A**	1.00	0.92	59*N*A060V17**14
CSPH*2412A**	0.98	0.93	59*N*A060V17**14
CSPH*3012A**	0.99	0.92	59*N*A060V17**14
CAP**2417A**	0.97	0.92	59*N*A080V17**14
CAP**3017A**	0.97	0.90	59*N*A080V17**14
CNPH*2417A**	0.97	0.92	59*N*A080V17**14
CNPH*3017A**	0.97	0.90	59*N*A080V17**14
CNPH*3117A**	0.99	0.92	59*N*A080V17**14
CNPV*2417A**	0.97	0.92	59*N*A080V17**14
CNPV*3017A**	0.97	0.90	59*N*A080V17**14
CNPV*3117A**	0.99	0.92	59*N*A080V17**14
CSPH*2412A**	0.98	0.91	59*N*A080V17**14
CSPH*3012A**	0.98	0.91	59*N*A080V17**14
CNPH*2417A**	0.98	0.93	59*N*A100V21**20
CNPH*3017A**	0.99	0.92	59*N*A100V21**20
CNPH*3117A**	1.01	0.92	59*N*A100V21**20
CSPH*2412A**	1.00	0.92	59*N*A100V21**20

COOLING INDOOR MODEL	CAPACITY	POWER	FURNACE MODEL
CSPH*3012A**	1.00	0.92	59*N*A100V21**20
CNPH*2417A**	0.98	0.93	59*N*A120V24**22
CNPH*3017A**	0.99	0.92	59*N*A120V24**22
CNPH*3117A**	1.01	0.92	59*N*A120V24**22
CSPH*2412A**	0.99	0.92	59*N*A120V24**22
CSPH*3012A**	1.00	0.92	59*N*A120V24**22
CAP**2414A**	0.98	0.98	59*P5A040E14**10
CAP**2417A**	0.98	0.98	59*P5A040E14**10
CAP**3014A**	0.99	0.99	59*P5A040E14**10
CAP**3017A**	0.99	0.99	59*P5A040E14**10
CNPH*2417A**	0.98	0.98	59*P5A040E14**10
CNPH*3017A**	0.99	0.99	59*P5A040E14**10
CNPH*3117A**	1.02	0.98	59*P5A040E14**10
CNPV*2414A**	0.98	0.98	59*P5A040E14**10
CNPV*2417A**	0.98	0.98	59*P5A040E14**10
CNPV*3014A**	0.99	0.99	59*P5A040E14**10
CNPV*3017A**	0.99	0.99	59*P5A040E14**10
CNPV*3117A**	1.02	0.98	59*P5A040E14**10
CSPH*2412A**	0.99	0.99	59*P5A040E14**10
CSPH*3012A**	1.00	1.00	59*P5A040E14**10
CAP**2417A**	0.97	0.90	59*P5A060E17**14
CAP**3017A**	0.99	0.92	59*P5A060E17**14
CNPH*2417A**	0.97	0.92	59*P5A060E17**14
CNPH*3017A**	0.99	0.92	59*P5A060E17**14
CNPH*3117A**	1.01	0.92	59*P5A060E17**14
CNPV*2417A**	0.97	0.92	59*P5A060E17**14
CNPV*3017A**	0.99	0.92	59*P5A060E17**14
CNPV*3117A**	1.01	0.92	59*P5A060E17**14
CSPH*2412A**	0.97	0.92	59*P5A060E17**14
CSPH*3012A**	0.99	0.92	59*P5A060E17**14
CAP**2417A**	0.98	0.91	OVLAAB036098
CAP**3017A**	0.99	0.92	OVLAAB036098
CNPH*2417A**	0.98	0.91	OVLAAB036098
CNPH*3017A**	0.99	0.92	OVLAAB036098
CNPH*3117A**	1.01	0.93	OVLAAB036098
CNPV*2417A**	0.98	0.91	OVLAAB036098
CNPV*3017A**	0.99	0.92	OVLAAB036098
CNPV*3117A**	1.01	0.93	OVLAAB036098
CSPH*2412A**	0.99	0.92	OVLAAB036098
CSPH*3012A**	1.00	0.92	OVLAAB036098
CAP**2417A**	0.98	0.91	OVMAAB036098
CAP**3017A**	0.99	0.92	OVMAAB036098
CNPH*2417A**	0.98	0.94	OVMAAB036098
CNPH*3017A**	0.99	0.92	OVMAAB036098
CNPH*3117A**	1.01	0.93	OVMAAB036098
CNPV*2417A**	0.98	0.94	OVMAAB036098
CNPV*3017A**	0.99	0.92	OVMAAB036098
CNPV*3117A**	1.01	0.93	OVMAAB036098
CSPH*2412A**	0.99	0.92	OVMAAB036098
CSPH*3012A**	0.99	0.92	OVMAAB036098

See notes on pg. 69

DETAILED COOLING CAPACITIES# (CONT.)

EVAPORATOR AIR		CONDENSER ENTERING AIR TEMPERATURES °F (°C)																	
		75 (23.9)			85 (29.4)			95 (35)			105 (40.6)			115 (46.1)			125 (51.7)		
CFM	EWB °F (°C)	Capacity MBtuh		Total System KW**	Capacity MBtuh		Total System KW**	Capacity MBtuh		Total System KW**	Capacity MBtuh		Total System KW**	Capacity MBtuh		Total System KW**	Capacity MBtuh		Total System KW**
		Total	Sens‡		Total	Sens‡		Total	Sens‡		Total	Sens‡		Total	Sens‡		Total	Sens‡	
24ACC630A**30 Outdoor Section With CNPV*3117A** Indoor Section																			
875	57 (13.9)	34.09	17.01	1.91	32.58	16.48	2.11	31.00	15.93	2.33	29.32	15.36	2.59	27.51	14.75	2.88	25.53	14.09	3.22
	62 (16.7)	30.99	20.96	1.92	29.61	20.43	2.12	28.16	19.88	2.34	26.61	19.29	2.59	24.93	18.66	2.88	23.10	17.99	3.22
	63 (17.2)††	28.76	20.15	1.93	27.47	19.62	2.12	26.11	19.06	2.34	24.65	18.46	2.59	23.07	17.83	2.88	21.33	17.13	3.22
	67 (19.4)	28.31	24.86	1.93	27.08	24.31	2.12	25.80	23.72	2.34	24.56	24.56	2.59	23.28	23.28	2.88	21.87	21.87	3.21
	72 (22.2)	27.76	27.76	1.93	26.76	26.76	2.12	25.69	25.69	2.34	24.52	24.52	2.59	23.25	23.25	2.88	21.83	21.83	3.21
1000	57 (13.9)	34.67	17.91	1.96	33.09	17.37	2.15	31.45	16.82	2.38	29.71	16.24	2.63	27.83	15.62	2.93	25.79	14.95	3.26
	62 (16.7)	31.55	22.41	1.97	30.10	21.86	2.16	28.60	21.30	2.38	27.00	20.71	2.64	25.27	20.07	2.93	23.39	19.37	3.26
	63 (17.2)††	29.30	21.50	1.97	27.95	20.95	2.17	26.55	20.38	2.39	25.04	19.78	2.64	23.40	19.12	2.93	21.63	18.42	3.26
	67 (19.4)	29.03	28.77	1.97	27.89	27.89	2.16	26.74	26.74	2.39	25.50	25.50	2.64	24.14	24.14	2.93	22.64	22.64	3.26
	72 (22.2)	28.93	28.93	1.97	27.84	27.84	2.16	26.70	26.70	2.39	25.46	25.46	2.64	24.11	24.11	2.93	22.61	22.61	3.26
1125	57 (13.9)	35.09	18.77	2.00	33.45	18.22	2.20	31.76	17.66	2.42	29.97	17.07	2.68	28.04	16.45	2.97	25.96	15.78	3.31
	62 (16.7)	31.96	23.80	2.01	30.47	23.24	2.21	28.93	22.67	2.43	27.29	22.06	2.68	25.52	21.41	2.97	23.62	20.69	3.31
	63 (17.2)††	29.70	22.78	2.02	28.32	22.23	2.21	26.87	21.65	2.43	25.32	21.03	2.69	23.66	20.36	2.98	21.87	19.61	3.31
	67 (19.4)	29.93	29.93	2.02	28.78	28.78	2.21	27.57	27.57	2.43	26.26	26.26	2.68	24.83	24.83	2.97	23.26	23.26	3.31
	72 (22.2)	29.89	29.89	2.02	28.74	28.74	2.21	27.53	27.53	2.43	26.22	26.22	2.68	24.80	24.80	2.97	23.23	23.23	3.31

COOLING INDOOR MODEL	CAPACITY	POWER	FURNACE MODEL
*CNPV*3117A**	1.00	1.00	
CAP**3014A**	0.98	0.98	
CAP**3017A**	0.98	0.98	
CAP**3614A**	0.98	0.98	
CAP**3617A**	0.98	0.98	
CAP**3619A**	0.98	1.02	
CAP**3621A**	0.98	0.98	
CAP**4221A**	0.99	1.03	
CAP**4224A**	0.99	1.03	
CNPF*3618A**	0.98	1.02	
CNPH*3017A**	0.98	0.98	
CNPH*3117A**	1.00	1.00	
CNPH*3617A**	0.98	0.98	
CNPH*4221A**	0.99	1.03	
CNPV*3014A**	0.98	0.98	
CNPV*3017A**	0.98	0.98	
CNPV*3617A**	0.98	0.98	
CNPV*3621A**	0.98	0.98	
CNPV*4217A**	0.99	1.04	
CNPV*4221A**	0.99	1.03	
CSPH*3012A**	0.99	1.03	
CSPH*3612A**	1.00	1.00	
CSPH*4212A**	1.00	1.00	
FB4CNF030	0.98	0.94	
FB4CNF030	0.98	0.94	
FB4CNF036	0.98	0.94	
FB4CNF036	0.98	0.94	
FE4AN(B,F)003	0.99	0.91	
FE4AN(B,F)005	1.01	0.93	
FE4ANF002	0.98	0.90	
FE5ANB004	1.01	0.94	
FF1ENP030	0.97	0.97	
FF1ENP031	0.99	0.95	
FF1ENP036	0.98	0.98	
FF1ENP037	0.99	0.95	

COOLING INDOOR MODEL	CAPACITY	POWER	FURNACE MODEL
FV4BN(B,F)003	0.98	0.89	
FV4BN(B,F)005	1.00	0.89	
FV4BNF002	0.98	0.90	
FV4CN(B,F)003	0.99	0.91	
FV4CN(B,F)005	1.01	0.93	
FV4CNF002	0.98	0.90	
FX4CN(B,F)036	0.99	0.95	
FX4CN(B,F)042	0.99	0.99	
FX4CNF030	0.98	0.93	
FX4DN(B,F)031	0.99	0.92	
FX4DN(B,F)037	1.01	0.93	
FY4ANF030	0.97	0.99	
FY4ANF036	0.97	1.01	
FY4ANF042	0.99	1.03	
FY5BNF030	0.98	0.94	
FY5BNF030	0.98	0.94	
FY5BNF036	0.98	0.98	
FY5BNF036	0.98	0.98	
CAP**3014A**	0.97	0.89	58CV(A,X)070–12
CAP**3017A**	0.97	0.93	58CV(A,X)070–12
CAP**3614A**	0.97	0.93	58CV(A,X)070–12
CAP**3617A**	0.97	0.93	58CV(A,X)070–12
CNPH*3017A**	0.97	0.93	58CV(A,X)070–12
CNPH*3117A**	0.99	0.92	58CV(A,X)070–12
CNPH*3617A**	0.97	0.93	58CV(A,X)070–12
CNPH*4221A**	0.98	0.90	58CV(A,X)070–12
CNPV*3014A**	0.97	0.93	58CV(A,X)070–12
CNPV*3017A**	0.97	0.93	58CV(A,X)070–12
CNPV*3117A**	0.99	0.92	58CV(A,X)070–12
CNPV*3617A**	0.97	0.93	58CV(A,X)070–12
CNPV*4217A**	0.99	0.91	58CV(A,X)070–12
CSPH*3012A**	0.97	0.93	58CV(A,X)070–12
CSPH*3612A**	0.99	0.91	58CV(A,X)070–12
CSPH*4212A**	0.99	0.92	58CV(A,X)070–12
CAP**3017A**	0.97	0.90	58CV(A,X)090–16

COOLING INDOOR MODEL	CAPACITY	POWER	FURNACE MODEL
CAP**3617A**	0.97	0.90	58CV(A,X)090–16
CAP**3621A**	0.97	0.90	58CV(A,X)090–16
CAP**4221A**	0.98	0.90	58CV(A,X)090–16
CNPH*3017A**	0.97	0.90	58CV(A,X)090–16
CNPH*3117A**	0.99	0.92	58CV(A,X)090–16
CNPH*3617A**	0.97	0.90	58CV(A,X)090–16
CNPH*4221A**	0.98	0.90	58CV(A,X)090–16
CNPV*3017A**	0.97	0.90	58CV(A,X)090–16
CNPV*3117A**	0.99	0.92	58CV(A,X)090–16
CNPV*3617A**	0.97	0.90	58CV(A,X)090–16
CNPV*3621A**	0.97	0.90	58CV(A,X)090–16
CNPV*4217A**	0.99	0.91	58CV(A,X)090–16
CNPV*4221A**	0.98	0.90	58CV(A,X)090–16
CSPH*3012A**	0.98	0.90	58CV(A,X)090–16
CSPH*3612A**	0.99	0.92	58CV(A,X)090–16
CSPH*4212A**	0.99	0.92	58CV(A,X)090–16
CAP**3621A**	0.97	0.90	58CV(A,X)110–20
CAP**4221A**	0.98	0.90	58CV(A,X)110–20
CAP**4224A**	0.99	0.91	58CV(A,X)110–20
CNPH*3017A**	0.97	0.90	58CV(A,X)110–20
CNPH*3117A**	0.99	0.92	58CV(A,X)110–20
CNPH*3617A**	0.97	0.90	58CV(A,X)110–20
CNPH*4221A**	0.99	0.91	58CV(A,X)110–20
CNPV*3621A**	0.97	0.90	58CV(A,X)110–20
CNPV*4221A**	0.99	0.91	58CV(A,X)110–20
CSPH*3012A**	0.98	0.90	58CV(A,X)110–20
CSPH*3612A**	0.99	0.92	58CV(A,X)110–20
CSPH*4212A**	1.00	0.92	58CV(A,X)110–20
CAP**4224A**	0.99	0.91	58CV(A,X)135–22
CNPH*3017A**	0.97	0.90	58CV(A,X)135–22
CNPH*3117A**	0.99	0.92	58CV(A,X)135–22
CNPH*3617A**	0.97	0.90	58CV(A,X)135–22
CNPH*4221A**	0.99	0.91	58CV(A,X)135–22
CSPH*3012A**	0.98	0.90	58CV(A,X)135–22
CSPH*3612A**	0.99	0.92	58CV(A,X)135–22

DETAILED COOLING CAPACITIES# (CONT.)

24ACC630A30 Outdoor Section With CNPV*3117A** Indoor Section**

COOLING INDOOR MODEL	CAPACITY	POWER	FURNACE MODEL
CSPH*4212A**	1.00	0.92	58CV(A,X)135–22
CAP**4224A**	0.99	0.91	58CV(A,X)155–22
CNPH*3017A**	0.97	0.90	58CV(A,X)155–22
CNPH*3117A**	0.99	0.92	58CV(A,X)155–22
CNPH*3617A**	0.97	0.90	58CV(A,X)155–22
CNPH*4221A**	0.99	0.91	58CV(A,X)155–22
CSPH*3012A**	0.98	0.90	58CV(A,X)155–22
CSPH*3612A**	0.99	0.92	58CV(A,X)155–22
CSPH*4212A**	1.00	0.92	58CV(A,X)155–22
CAP**3619A**	0.98	0.94	58HDV040––12
CNPH*3017A**	0.97	0.93	58HDV040––12
CNPH*3117A**	0.99	0.92	58HDV040––12
CNPH*3617A**	0.97	0.93	58HDV040––12
CNPV*3017A**	0.97	0.93	58HDV040––12
CNPV*3117A**	0.99	0.92	58HDV040––12
CNPV*3617A**	0.97	0.93	58HDV040––12
CNPV*3621A**	0.97	0.93	58HDV040––12
CNPV*3717A**	1.00	0.92	58HDV040––12
CSPH*3012A**	0.97	0.93	58HDV040––12
CSPH*3612A**	0.99	0.95	58HDV040––12
CAP**3619A**	0.99	0.95	58HDV060––12
CNPH*3017A**	0.97	0.93	58HDV060––12
CNPH*3117A**	1.00	0.92	58HDV060––12
CNPH*3617A**	0.97	0.93	58HDV060––12
CNPV*3017A**	0.97	0.93	58HDV060––12
CNPV*3117A**	1.00	0.92	58HDV060––12
CNPV*3617A**	0.97	0.93	58HDV060––12
CNPV*3621A**	0.97	0.93	58HDV060––12
CNPV*3717A**	1.01	0.94	58HDV060––12
CSPH*3012A**	0.98	0.94	58HDV060––12
CSPH*3612A**	1.00	0.96	58HDV060––12
CAP**3017A**	0.99	0.91	58ME(B,C)060–12
CAP**3617A**	0.99	0.91	58ME(B,C)060–12
CAP**3621A**	0.99	0.91	58ME(B,C)060–12
CAP**4221A**	1.00	0.92	58ME(B,C)060–12
CNPH*3017A**	0.99	0.91	58ME(B,C)060–12
CNPH*3117A**	1.01	0.93	58ME(B,C)060–12
CNPH*3617A**	0.99	0.91	58ME(B,C)060–12
CNPH*4221A**	0.99	0.92	58ME(B,C)060–12
CNPV*3017A**	0.99	0.91	58ME(B,C)060–12
CNPV*3117A**	1.01	0.93	58ME(B,C)060–12
CNPV*3617A**	0.99	0.91	58ME(B,C)060–12
CNPV*3621A**	0.99	0.91	58ME(B,C)060–12
CNPV*3717A**	1.01	0.94	58ME(B,C)060–12
CNPV*4217A**	1.00	0.92	58ME(B,C)060–12
CNPV*4221A**	0.99	0.92	58ME(B,C)060–12
CSPH*3012A**	0.99	0.91	58ME(B,C)060–12
CSPH*3612A**	1.01	0.93	58ME(B,C)060–12
CSPH*4212A**	1.01	0.94	58ME(B,C)060–12
CAP**3017A**	0.98	0.90	58ME(B,C)080–12
CAP**3617A**	0.99	0.91	58ME(B,C)080–12
CAP**3621A**	0.99	0.91	58ME(B,C)080–12
CAP**4221A**	0.99	0.92	58ME(B,C)080–12
CNPH*3017A**	0.98	0.90	58ME(B,C)080–12
CNPH*3117A**	1.01	0.93	58ME(B,C)080–12
CNPH*3617A**	0.98	0.90	58ME(B,C)080–12

COOLING INDOOR MODEL	CAPACITY	POWER	FURNACE MODEL
CNPH*4221A**	0.99	0.92	58ME(B,C)080–12
CNPV*3017A**	0.98	0.90	58ME(B,C)080–12
CNPV*3117A**	1.01	0.93	58ME(B,C)080–12
CNPV*3617A**	0.98	0.90	58ME(B,C)080–12
CNPV*3621A**	0.98	0.90	58ME(B,C)080–12
CNPV*4217A**	1.00	0.92	58ME(B,C)080–12
CNPV*4221A**	0.99	0.92	58ME(B,C)080–12
CSPH*3012A**	0.99	0.91	58ME(B,C)080–12
CSPH*3612A**	1.00	0.92	58ME(B,C)080–12
CSPH*4212A**	1.01	0.93	58ME(B,C)080–12
CAP**3017A**	0.99	0.91	58ME(B,C)080–16
CAP**3617A**	0.99	0.92	58ME(B,C)080–16
CAP**3621A**	0.99	0.92	58ME(B,C)080–16
CAP**4221A**	1.00	0.92	58ME(B,C)080–16
CNPH*3017A**	0.99	0.91	58ME(B,C)080–16
CNPH*3117A**	1.01	0.94	58ME(B,C)080–16
CNPH*3617A**	0.99	0.91	58ME(B,C)080–16
CNPH*4221A**	1.00	0.92	58ME(B,C)080–16
CNPV*3017A**	0.99	0.91	58ME(B,C)080–16
CNPV*3117A**	1.01	0.94	58ME(B,C)080–16
CNPV*3617A**	0.99	0.91	58ME(B,C)080–16
CNPV*3621A**	0.99	0.91	58ME(B,C)080–16
CNPV*4217A**	1.01	0.93	58ME(B,C)080–16
CNPV*4221A**	1.00	0.92	58ME(B,C)080–16
CSPH*3012A**	0.99	0.91	58ME(B,C)080–16
CSPH*3612A**	1.01	0.93	58ME(B,C)080–16
CSPH*4212A**	1.01	0.94	58ME(B,C)080–16
CAP**3017A**	0.99	0.91	58MEB040–12
CAP**3617A**	0.99	0.91	58MEB040–12
CAP**3621A**	0.99	0.91	58MEB040–12
CAP**4221A**	0.99	0.92	58MEB040–12
CNPH*3017A**	0.99	0.91	58MEB040–12
CNPH*3117A**	1.01	0.93	58MEB040–12
CNPH*3617A**	0.99	0.91	58MEB040–12
CNPH*4221A**	0.99	0.92	58MEB040–12
CNPV*3017A**	0.99	0.91	58MEB040–12
CNPV*3117A**	1.01	0.93	58MEB040–12
CNPV*3617A**	0.99	0.91	58MEB040–12
CNPV*3621A**	0.99	0.91	58MEB040–12
CNPV*4217A**	1.00	0.92	58MEB040–12
CNPV*4221A**	0.99	0.92	58MEB040–12
CSPH*3012A**	0.99	0.91	58MEB040–12
CSPH*3612A**	1.01	0.93	58MEB040–12
CSPH*4212A**	1.01	0.94	58MEB040–12
CAP**3017A**	0.98	0.90	58MV(B,C)060–14
CAP**3617A**	0.98	0.90	58MV(B,C)060–14
CAP**3621A**	0.99	0.91	58MV(B,C)060–14
CAP**4221A**	0.99	0.91	58MV(B,C)060–14
CNPH*3017A**	0.98	0.90	58MV(B,C)060–14
CNPH*3117A**	1.00	0.92	58MV(B,C)060–14
CNPH*3617A**	0.98	0.90	58MV(B,C)060–14
CNPH*4221A**	0.99	0.91	58MV(B,C)060–14
CNPV*3017A**	0.98	0.90	58MV(B,C)060–14
CNPV*3117A**	1.00	0.92	58MV(B,C)060–14
CNPV*3617A**	0.98	0.90	58MV(B,C)060–14
CNPV*3621A**	0.98	0.90	58MV(B,C)060–14

COOLING INDOOR MODEL	CAPACITY	POWER	FURNACE MODEL
CNPV*4217A**	0.99	0.92	58MV(B,C)060–14
CNPV*4221A**	0.99	0.91	58MV(B,C)060–14
CSPH*3012A**	0.98	0.90	58MV(B,C)060–14
CSPH*3612A**	0.99	0.92	58MV(B,C)060–14
CSPH*4212A**	1.00	0.92	58MV(B,C)060–14
CAP**3621A**	0.97	0.89	58MV(B,C)080–14
CAP**4221A**	0.98	0.90	58MV(B,C)080–14
CAP**4224A**	0.98	0.90	58MV(B,C)080–14
CNPH*3017A**	0.97	0.93	58MV(B,C)080–14
CNPH*3117A**	0.99	0.91	58MV(B,C)080–14
CNPH*3617A**	0.97	0.93	58MV(B,C)080–14
CNPH*4221A**	0.98	0.90	58MV(B,C)080–14
CNPV*3621A**	0.97	0.93	58MV(B,C)080–14
CNPV*4221A**	0.98	0.90	58MV(B,C)080–14
CNPV*4821A**	0.99	0.91	58MV(B,C)080–14
CSPH*3012A**	0.97	0.93	58MV(B,C)080–14
CSPH*3612A**	0.99	0.91	58MV(B,C)080–14
CSPH*4212A**	0.99	0.92	58MV(B,C)080–14
CAP**3621A**	0.97	0.90	58MV(B,C)080–20
CAP**4221A**	0.98	0.90	58MV(B,C)080–20
CAP**4224A**	0.98	0.90	58MV(B,C)080–20
CNPH*3017A**	0.97	0.93	58MV(B,C)080–20
CNPH*3117A**	0.99	0.92	58MV(B,C)080–20
CNPH*3617A**	0.97	0.93	58MV(B,C)080–20
CNPH*4221A**	0.98	0.90	58MV(B,C)080–20
CNPV*3621A**	0.97	0.93	58MV(B,C)080–20
CNPV*4221A**	0.98	0.90	58MV(B,C)080–20
CNPV*4821A**	0.99	0.91	58MV(B,C)080–20
CSPH*3012A**	0.98	0.94	58MV(B,C)080–20
CSPH*3612A**	0.99	0.92	58MV(B,C)080–20
CSPH*4212A**	0.99	0.92	58MV(B,C)080–20
CAP**3621A**	0.97	0.89	58MV(B,C)100–20
CAP**4221A**	0.97	0.90	58MV(B,C)100–20
CAP**4224A**	0.97	0.90	58MV(B,C)100–20
CNPH*3017A**	0.97	0.93	58MV(B,C)100–20
CNPH*3117A**	0.99	0.91	58MV(B,C)100–20
CNPH*3617A**	0.97	0.93	58MV(B,C)100–20
CNPH*4221A**	0.97	0.90	58MV(B,C)100–20
CNPV*3621A**	0.97	0.93	58MV(B,C)100–20
CNPV*4221A**	0.97	0.90	58MV(B,C)100–20
CNPV*4821A**	0.99	0.91	58MV(B,C)100–20
CSPH*3012A**	0.97	0.93	58MV(B,C)100–20
CSPH*3612A**	0.99	0.91	58MV(B,C)100–20
CSPH*4212A**	0.99	0.91	58MV(B,C)100–20
CAP**4224A**	0.98	0.90	58MV(B,C)120–20
CNPH*3017A**	0.97	0.90	58MV(B,C)120–20
CNPH*3117A**	0.99	0.92	58MV(B,C)120–20
CNPH*3617A**	0.97	0.90	58MV(B,C)120–20
CNPH*4221A**	0.99	0.91	58MV(B,C)120–20
CSPH*3012A**	0.98	0.90	58MV(B,C)120–20
CSPH*3612A**	0.99	0.92	58MV(B,C)120–20
CSPH*4212A**	1.00	0.92	58MV(B,C)120–20
CAP**4224A**	0.98	0.90	58MVB040–14
CNPH*3017A**	0.97	0.93	58MVB040–14
CNPH*3117A**	0.99	0.92	58MVB040–14
CNPH*3617A**	0.97	0.93	58MVB040–14

DETAILED COOLING CAPACITIES# (CONT.)

24ACC630A30 Outdoor Section With CNPV*3117A** Indoor Section**

COOLING INDOOR MODEL	CAPACITY	POWER	FURNACE MODEL
CNPH*4221A**	0.98	0.90	58MVB040–14
CSPH*3012A**	0.97	0.93	58MVB040–14
CSPH*3612A**	0.99	0.91	58MVB040–14
CSPH*4212A**	0.99	0.92	58MVB040–14
CAP**3017A**	0.98	0.94	58PH*070–16
CAP**3617A**	0.98	0.94	58PH*070–16
CAP**3621A**	0.98	0.90	58PH*070–16
CAP**4221A**	0.99	0.95	58PH*070–16
CNPH*3017A**	0.98	0.94	58PH*070–16
CNPH*3117A**	1.00	0.92	58PH*070–16
CNPH*3617A**	0.98	0.94	58PH*070–16
CNPH*4221A**	0.99	0.95	58PH*070–16
CNPV*3017A**	0.98	0.94	58PH*070–16
CNPV*3117A**	1.00	0.92	58PH*070–16
CNPV*3617A**	0.98	0.94	58PH*070–16
CNPV*3621A**	0.98	0.94	58PH*070–16
CNPV*4217A**	0.99	0.92	58PH*070–16
CNPV*4221A**	0.99	0.95	58PH*070–16
CSPH*3012A**	0.98	0.94	58PH*070–16
CSPH*3612A**	1.00	0.92	58PH*070–16
CSPH*4212A**	1.00	0.92	58PH*070–16
CAP**3621A**	0.99	0.91	58PH*090–16
CAP**4221A**	0.99	0.92	58PH*090–16
CAP**4224A**	0.99	0.92	58PH*090–16
CNPH*3017A**	0.98	0.94	58PH*090–16
CNPH*3117A**	1.00	0.92	58PH*090–16
CNPH*3617A**	0.98	0.94	58PH*090–16
CNPH*4221A**	0.99	0.92	58PH*090–16
CNPV*3621A**	0.98	0.94	58PH*090–16
CNPV*4221A**	0.99	0.92	58PH*090–16
CSPH*3012A**	0.98	0.94	58PH*090–16
CSPH*3612A**	1.00	0.92	58PH*090–16
CSPH*4212A**	1.01	0.93	58PH*090–16
CAP**3017A**	0.98	0.90	58UVB060–14
CAP**3017A**	0.98	0.90	58UVB060–14
CAP**3617A**	0.98	0.90	58UVB060–14
CAP**3617A**	0.98	0.90	58UVB060–14
CAP**3621A**	0.99	0.91	58UVB060–14
CAP**3621A**	0.99	0.91	58UVB060–14
CAP**4221A**	0.99	0.91	58UVB060–14
CAP**4221A**	0.99	0.91	58UVB060–14
CNPV*3017A**	0.98	0.90	58UVB060–14
CNPV*3017A**	0.98	0.90	58UVB060–14
CNPV*3117A**	1.00	0.92	58UVB060–14
CNPV*3117A**	1.00	0.92	58UVB060–14
CNPV*3617A**	0.98	0.90	58UVB060–14
CNPV*3617A**	0.98	0.90	58UVB060–14
CNPV*3621A**	0.98	0.90	58UVB060–14
CNPV*3621A**	0.98	0.90	58UVB060–14
CNPV*4217A**	0.99	0.92	58UVB060–14
CNPV*4217A**	0.99	0.92	58UVB060–14
CNPV*4221A**	0.99	0.91	58UVB060–14
CNPV*4221A**	0.99	0.91	58UVB060–14
CAP**3621A**	0.97	0.89	58UVB080–14
CAP**3621A**	0.97	0.89	58UVB080–14
CAP**4221A**	0.98	0.90	58UVB080–14

COOLING INDOOR MODEL	CAPACITY	POWER	FURNACE MODEL
CAP**4221A**	0.98	0.90	58UVB080–14
CAP**4224A**	0.98	0.90	58UVB080–14
CAP**4224A**	0.98	0.90	58UVB080–14
CNPV*3621A**	0.97	0.93	58UVB080–14
CNPV*3621A**	0.97	0.93	58UVB080–14
CNPV*4221A**	0.98	0.90	58UVB080–14
CNPV*4221A**	0.98	0.90	58UVB080–14
CNPV*4821A**	0.99	0.91	58UVB080–14
CNPV*4821A**	0.99	0.91	58UVB080–14
CAP**3621A**	0.97	0.90	58UVB080–20
CAP**3621A**	0.97	0.90	58UVB080–20
CAP**4221A**	0.98	0.90	58UVB080–20
CAP**4221A**	0.98	0.90	58UVB080–20
CAP**4224A**	0.98	0.90	58UVB080–20
CAP**4224A**	0.98	0.90	58UVB080–20
CNPV*3621A**	0.97	0.93	58UVB080–20
CNPV*3621A**	0.97	0.93	58UVB080–20
CNPV*4221A**	0.98	0.90	58UVB080–20
CNPV*4221A**	0.98	0.90	58UVB080–20
CNPV*4821A**	0.99	0.91	58UVB080–20
CNPV*4821A**	0.99	0.91	58UVB080–20
CAP**3621A**	0.97	0.89	58UVB100–20
CAP**3621A**	0.97	0.89	58UVB100–20
CAP**4221A**	0.97	0.90	58UVB100–20
CAP**4221A**	0.97	0.90	58UVB100–20
CAP**4224A**	0.97	0.90	58UVB100–20
CAP**4224A**	0.97	0.90	58UVB100–20
CNPV*3621A**	0.97	0.93	58UVB100–20
CNPV*3621A**	0.97	0.93	58UVB100–20
CNPV*4221A**	0.97	0.90	58UVB100–20
CNPV*4221A**	0.97	0.90	58UVB100–20
CNPV*4821A**	0.99	0.91	58UVB100–20
CNPV*4821A**	0.99	0.91	58UVB100–20
CAP**4224A**	0.98	0.90	58UVB120–20
CAP**4224A**	0.98	0.90	58UVB120–20
CAP**3017A**	0.97	0.90	58VLR105–12
CAP**3617A**	0.97	0.90	58VLR105–12
CAP**3621A**	0.98	0.90	58VLR105–12
CAP**4221A**	0.98	0.90	58VLR105–12
CNPH*3017A**	0.97	0.90	58VLR105–12
CNPH*3117A**	0.99	0.92	58VLR105–12
CNPH*3617A**	0.97	0.90	58VLR105–12
CNPH*4221A**	0.98	0.90	58VLR105–12
CNPV*3017A**	0.97	0.90	58VLR105–12
CNPV*3117A**	0.99	0.92	58VLR105–12
CNPV*3617A**	0.97	0.90	58VLR105–12
CNPV*3621A**	0.97	0.90	58VLR105–12
CNPV*4217A**	0.99	0.91	58VLR105–12
CNPV*4221A**	0.98	0.90	58VLR105–12
CSPH*3012A**	0.98	0.90	58VLR105–12
CSPH*3612A**	0.99	0.92	58VLR105–12
CSPH*4212A**	1.00	0.92	58VLR105–12
CAP**3017A**	0.96	0.88	58VMR105–12
CAP**3617A**	0.97	0.89	58VMR105–12
CAP**3621A**	0.97	0.89	58VMR105–12
CAP**4221A**	0.97	0.90	58VMR105–12

COOLING INDOOR MODEL	CAPACITY	POWER	FURNACE MODEL
CNPH*3017A**	0.96	0.88	58VMR105–12
CNPH*3117A**	0.98	0.90	58VMR105–12
CNPH*3617A**	0.96	0.88	58VMR105–12
CNPH*4221A**	0.97	0.90	58VMR105–12
CNPV*3017A**	0.96	0.88	58VMR105–12
CNPV*3117A**	0.98	0.90	58VMR105–12
CNPV*3617A**	0.96	0.88	58VMR105–12
CNPV*3621A**	0.96	0.88	58VMR105–12
CNPV*4217A**	0.98	0.90	58VMR105–12
CNPV*4221A**	0.97	0.90	58VMR105–12
CSPH*3012A**	0.97	0.89	58VMR105–12
CSPH*3612A**	0.98	0.90	58VMR105–12
CSPH*4212A**	0.99	0.91	58VMR105–12
CAP**3017A**	0.97	0.91	59*N*A060V17**14
CAP**3617A**	0.97	0.91	59*N*A060V17**14
CAP**3619A**	0.97	0.91	59*N*A060V17**14
CAP**3621A**	0.97	0.92	59*N*A060V17**14
CNPH*3017A**	0.97	0.91	59*N*A060V17**14
CNPH*3117A**	0.99	0.93	59*N*A060V17**14
CNPH*3617A**	0.97	0.91	59*N*A060V17**14
CNPV*3017A**	0.97	0.91	59*N*A060V17**14
CNPV*3117A**	0.99	0.93	59*N*A060V17**14
CNPV*3617A**	0.97	0.91	59*N*A060V17**14
CNPV*3621A**	0.97	0.91	59*N*A060V17**14
CNPV*3717A**	1.00	0.92	59*N*A060V17**14
CSPH*3012A**	0.97	0.92	59*N*A060V17**14
CSPH*3612A**	0.99	0.93	59*N*A060V17**14
CAP**3017A**	0.97	0.92	59*N*A080V17**14
CAP**3617A**	0.97	0.92	59*N*A080V17**14
CAP**3619A**	0.97	0.92	59*N*A080V17**14
CAP**3621A**	0.97	0.92	59*N*A080V17**14
CNPH*3017A**	0.97	0.92	59*N*A080V17**14
CNPH*3117A**	0.99	0.92	59*N*A080V17**14
CNPH*3617A**	0.97	0.92	59*N*A080V17**14
CNPV*3017A**	0.97	0.92	59*N*A080V17**14
CNPV*3117A**	0.99	0.92	59*N*A080V17**14
CNPV*3617A**	0.97	0.92	59*N*A080V17**14
CNPV*3621A**	0.97	0.92	59*N*A080V17**14
CNPV*3717A**	1.00	0.92	59*N*A080V17**14
CSPH*3012A**	0.98	0.93	59*N*A080V17**14
CSPH*3612A**	0.99	0.92	59*N*A080V17**14
CAP**3619A**	0.98	0.93	59*N*A100V21**20
CAP**3621A**	0.98	0.90	59*N*A100V21**20
CNPH*3017A**	0.98	0.93	59*N*A100V21**20
CNPH*3117A**	1.00	0.92	59*N*A100V21**20
CNPH*3617A**	0.98	0.93	59*N*A100V21**20
CNPV*3621A**	0.98	0.93	59*N*A100V21**20
CSPH*3012A**	0.98	0.93	59*N*A100V21**20
CSPH*3612A**	0.99	0.92	59*N*A100V21**20
CNPH*3017A**	0.97	0.90	59*N*A120V24**22
CNPH*3117A**	0.99	0.92	59*N*A120V24**22
CNPH*3617A**	0.97	0.90	59*N*A120V24**22
CSPH*3012A**	0.98	0.93	59*N*A120V24**22
CSPH*3612A**	0.99	0.92	59*N*A120V24**22
CAP**3017A**	0.97	0.92	59*P5A060E17**14
CAP**3617A**	0.98	0.93	59*P5A060E17**14

DETAILED COOLING CAPACITIES# (CONT.)

24ACC630A30 Outdoor Section With CNPV*3117A** Indoor Section**

COOLING INDOOR MODEL	CAPACITY	POWER	FURNACE MODEL
CAP**3619A**	0.98	0.93	59*P5A060E17**14
CAP**3621A**	0.98	0.93	59*P5A060E17**14
CNPH*3017A**	0.97	0.92	59*P5A060E17**14
CNPH*3117A**	0.99	0.92	59*P5A060E17**14
CNPH*3617A**	0.97	0.92	59*P5A060E17**14
CNPV*3017A**	0.97	0.92	59*P5A060E17**14
CNPV*3117A**	0.99	0.92	59*P5A060E17**14
CNPV*3617A**	0.97	0.92	59*P5A060E17**14
CNPV*3621A**	0.97	0.92	59*P5A060E17**14
CNPV*3717A**	1.01	0.93	59*P5A060E17**14
CSPH*3012A**	0.97	0.92	59*P5A060E17**14
CSPH*3612A**	0.99	0.92	59*P5A060E17**14
CAP**3017A**	0.98	0.93	59*P5A080E17**16
CAP**3617A**	0.99	0.93	59*P5A080E17**16
CAP**3619A**	0.99	0.93	59*P5A080E17**16
CAP**3621A**	0.99	0.93	59*P5A080E17**16
CNPH*3017A**	0.98	0.93	59*P5A080E17**16
CNPH*3117A**	1.01	0.93	59*P5A080E17**16
CNPH*3617A**	0.98	0.93	59*P5A080E17**16
CNPV*3017A**	0.98	0.93	59*P5A080E17**16
CNPV*3117A**	1.00	0.92	59*P5A080E17**16
CNPV*3617A**	0.98	0.93	59*P5A080E17**16
CNPV*3621A**	0.98	0.93	59*P5A080E17**16
CNPV*3717A**	1.01	0.94	59*P5A080E17**16
CSPH*3012A**	0.99	0.93	59*P5A080E17**16
CSPH*3612A**	1.00	0.92	59*P5A080E17**16
CAP**3017A**	0.97	0.93	OVLAAB036098
CAP**3617A**	0.97	0.90	OVLAAB036098
CAP**3619A**	0.97	0.90	OVLAAB036098
CAP**3621A**	0.97	0.90	OVLAAB036098
CNPH*3017A**	0.97	0.93	OVLAAB036098
CNPH*3117A**	0.99	0.92	OVLAAB036098
CNPH*3617A**	0.97	0.93	OVLAAB036098
CNPV*3017A**	0.97	0.93	OVLAAB036098
CNPV*3117A**	0.99	0.92	OVLAAB036098
CNPV*3617A**	0.97	0.93	OVLAAB036098
CNPV*3621A**	0.97	0.93	OVLAAB036098
CNPV*3717A**	1.00	0.92	OVLAAB036098
CSPH*3012A**	0.97	0.93	OVLAAB036098
CSPH*3612A**	0.99	0.91	OVLAAB036098
CAP**3017A**	0.97	0.93	OVMAAB036098
CAP**3617A**	0.97	0.93	OVMAAB036098
CAP**3619A**	0.97	0.93	OVMAAB036098
CAP**3621A**	0.97	0.90	OVMAAB036098
CNPH*3017A**	0.97	0.93	OVMAAB036098
CNPH*3117A**	0.99	0.92	OVMAAB036098
CNPH*3617A**	0.97	0.93	OVMAAB036098
CNPV*3017A**	0.97	0.93	OVMAAB036098
CNPV*3117A**	0.99	0.92	OVMAAB036098
CNPV*3617A**	0.97	0.93	OVMAAB036098
CNPV*3621A**	0.97	0.93	OVMAAB036098
CNPV*3717A**	1.00	0.92	OVMAAB036098
CSPH*3012A**	0.97	0.93	OVMAAB036098
CSPH*3612A**	0.99	0.92	OVMAAB036098

See notes on pg. 69

DETAILED COOLING CAPACITIES# (CONT.)

EVAPORATOR AIR		CONDENSER ENTERING AIR TEMPERATURES °F (°C)																	
		75 (23.9)			85 (29.4)			95 (35)			105 (40.6)			115 (46.1)			125 (51.7)		
CFM	EWB °F (°C)	Capacity MBtuh		Total System KW**	Capacity MBtuh		Total System KW**	Capacity MBtuh		Total System KW**	Capacity MBtuh		Total System KW**	Capacity MBtuh		Total System KW**	Capacity MBtuh		Total System KW**
		Total	Sens‡		Total	Sens‡		Total	Sens‡		Total	Sens‡		Total	Sens‡		Total	Sens‡	
24ACC636A**30 Outdoor Section With CNPV*3717A** Indoor Section																			
1050	57 (13.9)	41.06	20.32	2.39	39.22	19.68	2.65	37.27	19.01	2.95	35.20	18.31	3.28	33.01	17.57	3.66	30.65	16.79	4.11
	62 (16.7)	37.33	25.02	2.37	35.65	24.38	2.63	33.87	23.70	2.93	31.96	22.99	3.26	29.95	22.24	3.65	27.79	21.45	4.09
	63 (17.2)††	34.65	24.06	2.36	33.08	23.41	2.62	31.40	22.73	2.92	29.62	22.01	3.25	27.73	21.26	3.64	25.71	20.45	4.09
	67 (19.4)	34.09	29.67	2.36	32.58	29.00	2.62	31.00	28.29	2.91	29.47	29.47	3.25	27.95	27.95	3.64	26.29	26.29	4.09
	72 (22.2)	33.38	33.38	2.35	32.16	32.16	2.62	30.85	30.85	2.91	29.43	29.43	3.25	27.91	27.91	3.64	26.25	26.25	4.09
1200	57 (13.9)	41.77	21.40	2.45	39.84	20.74	2.72	37.82	20.07	3.01	35.67	19.35	3.35	33.39	18.60	3.73	30.96	17.82	4.17
	62 (16.7)	38.02	26.75	2.43	36.25	26.09	2.70	34.40	25.40	2.99	32.44	24.67	3.32	30.35	23.91	3.71	28.13	23.10	4.15
	63 (17.2)††	35.31	25.67	2.42	33.66	25.01	2.69	31.93	24.31	2.98	30.09	23.58	3.31	28.13	22.80	3.70	26.05	21.98	4.15
	67 (19.4)	34.94	31.96	2.42	33.53	33.53	2.69	32.12	32.12	2.98	30.60	30.60	3.32	28.97	28.97	3.70	27.21	27.21	4.15
	72 (22.2)	34.80	34.80	2.42	33.47	33.47	2.68	32.07	32.07	2.98	30.55	30.55	3.32	28.93	28.93	3.70	27.17	27.17	4.15
1350	57 (13.9)	42.28	22.42	2.52	40.29	21.76	2.78	38.19	21.07	3.08	35.98	20.35	3.41	33.65	19.59	3.79	31.16	18.80	4.23
	62 (16.7)	38.51	28.41	2.50	36.70	27.73	2.76	34.80	27.03	3.05	32.78	26.29	3.39	30.65	25.51	3.77	28.39	24.66	4.22
	63 (17.2)††	35.80	27.21	2.48	34.11	26.53	2.75	32.32	25.82	3.04	30.43	25.07	3.38	28.44	24.28	3.76	26.32	23.41	4.21
	67 (19.4)	36.01	36.01	2.48	34.61	34.61	2.75	33.12	33.12	3.05	31.51	31.51	3.38	29.80	29.80	3.77	27.94	27.94	4.21
	72 (22.2)	35.96	35.96	2.48	34.56	34.56	2.75	33.08	33.08	3.04	31.47	31.47	3.38	29.76	29.76	3.77	27.91	27.91	4.21

COOLING INDOOR MODEL	CAPACITY	POWER	FURNACE MODEL
*CNPV*3717A**	1.00	1.00	
CAP**3614A**	0.95	0.99	
CAP**3617A**	0.96	1.00	
CAP**3619A**	0.96	1.00	
CAP**3621A**	0.96	1.00	
CAP**4221A**	0.97	1.01	
CAP**4224A**	0.97	1.01	
CAP**4817A**	0.99	1.03	
CAP**4821A**	0.98	1.03	
CAP**4823A**	0.98	1.03	
CAP**4824A**	0.98	1.03	
CNPF*3618A**	0.96	1.05	
CNPF*4818A**	0.98	1.03	
CNPH*3617A**	0.96	1.00	
CNPH*4221A**	0.97	1.01	
CNPH*4321A**	1.00	1.00	
CNPH*4821A**	0.99	1.03	
CNPH*6024A**	0.99	0.99	
CNPV*3617A**	0.96	1.00	
CNPV*3621A**	0.96	1.00	
CNPV*4217A**	0.98	1.03	
CNPV*4221A**	0.97	1.01	
CNPV*4821A**	0.99	1.03	
CNPV*4824A**	0.99	1.03	
CSPH*3612A**	0.98	1.03	
CSPH*4212A**	0.99	1.03	
CSPH*4812A**	0.99	1.04	
FB4CNF036	0.96	1.00	
FB4CNF036	0.96	1.00	
FB4CNF042	0.99	0.95	
FB4CNF042	0.99	0.99	
FE4AN(B,F)003	0.97	0.89	
FE4AN(B,F)005	0.99	0.92	
FE4ANB006	1.01	0.89	
FE4ANF002	0.96	0.96	

COOLING INDOOR MODEL	CAPACITY	POWER	FURNACE MODEL
FE5ANB004	1.01	0.89	
FF1ENP036	0.96	1.05	
FF1ENP037	0.97	1.01	
FV4BN(B,F)003	0.97	0.91	
FV4BN(B,F)005	0.99	0.90	
FV4BNB006	1.01	0.89	
FV4BNF002	0.96	0.94	
FV4CN(B,F)003	0.97	0.89	
FV4CN(B,F)005	0.99	0.92	
FV4CNB006	1.01	0.89	
FV4CNF002	0.96	0.96	
FX4CN(B,F)036	0.98	0.96	
FX4CN(B,F)042	0.99	0.97	
FX4CN(B,F)048	1.00	1.00	
FX4DN(B,F)037	0.99	0.92	
FX4DN(B,F)043	0.99	0.92	
FX4DN(B,F)049	1.01	0.93	
FY4ANF036	0.96	1.02	
FY4ANF042	0.98	1.02	
FY4ANF048	0.99	1.04	
FY5BNF036	0.97	1.01	
FY5BNF036	0.97	1.01	
FY5BNF042	0.98	1.03	
FY5BNF042	0.98	1.03	
CAP**3614A**	0.95	0.95	58CV(A,X)070–12
CAP**3617A**	0.95	0.95	58CV(A,X)070–12
CAP**4817A**	0.98	0.94	58CV(A,X)070–12
CNPH*3617A**	0.95	0.95	58CV(A,X)070–12
CNPH*4221A**	0.96	0.96	58CV(A,X)070–12
CNPH*4821A**	0.98	0.94	58CV(A,X)070–12
CNPV*3617A**	0.95	0.95	58CV(A,X)070–12
CNPV*3717A**	0.99	0.95	58CV(A,X)070–12
CNPV*4217A**	0.97	0.93	58CV(A,X)070–12
CSPH*3612A**	0.97	0.93	58CV(A,X)070–12
CSPH*4212A**	0.98	0.94	58CV(A,X)070–12

COOLING INDOOR MODEL	CAPACITY	POWER	FURNACE MODEL
CSPH*4812A**	0.98	0.94	58CV(A,X)070–12
CAP**3617A**	0.96	0.92	58CV(A,X)090–16
CAP**3621A**	0.96	0.92	58CV(A,X)090–16
CAP**4221A**	0.97	0.93	58CV(A,X)090–16
CAP**4817A**	0.98	0.91	58CV(A,X)090–16
CAP**4821A**	0.98	0.90	58CV(A,X)090–16
CNPH*3617A**	0.95	0.92	58CV(A,X)090–16
CNPH*4221A**	0.97	0.93	58CV(A,X)090–16
CNPH*4821A**	0.98	0.90	58CV(A,X)090–16
CNPV*3617A**	0.95	0.95	58CV(A,X)090–16
CNPV*3621A**	0.95	0.92	58CV(A,X)090–16
CNPV*3717A**	0.99	0.91	58CV(A,X)090–16
CNPV*4217A**	0.97	0.93	58CV(A,X)090–16
CNPV*4221A**	0.97	0.93	58CV(A,X)090–16
CNPV*4821A**	0.98	0.90	58CV(A,X)090–16
CSPH*3612A**	0.98	0.90	58CV(A,X)090–16
CSPH*4212A**	0.98	0.91	58CV(A,X)090–16
CSPH*4812A**	0.98	0.91	58CV(A,X)090–16
CAP**3621A**	0.96	0.92	58CV(A,X)110–20
CAP**4221A**	0.97	0.93	58CV(A,X)110–20
CAP**4224A**	0.97	0.89	58CV(A,X)110–20
CAP**4821A**	0.98	0.90	58CV(A,X)110–20
CAP**4824A**	0.98	0.90	58CV(A,X)110–20
CNPH*3617A**	0.95	0.92	58CV(A,X)110–20
CNPH*4221A**	0.97	0.93	58CV(A,X)110–20
CNPH*4821A**	0.98	0.91	58CV(A,X)110–20
CNPV*3621A**	0.96	0.92	58CV(A,X)110–20
CNPV*4221A**	0.97	0.93	58CV(A,X)110–20
CNPV*4821A**	0.98	0.91	58CV(A,X)110–20
CNPV*4824A**	0.98	0.91	58CV(A,X)110–20
CSPH*3612A**	0.98	0.90	58CV(A,X)110–20
CSPH*4212A**	0.98	0.91	58CV(A,X)110–20
CSPH*4812A**	0.99	0.91	58CV(A,X)110–20
CAP**4224A**	0.97	0.89	58CV(A,X)135–22
CAP**4824A**	0.98	0.90	58CV(A,X)135–22

DETAILED COOLING CAPACITIES# (CONT.)

24ACC636A30 Outdoor Section With CNPV*3717A** Indoor Section**

COOLING INDOOR MODEL	CAPACITY	POWER	FURNACE MODEL
CNPH*3617A**	0.95	0.92	58CV(A,X)135–22
CNPH*4221A**	0.97	0.93	58CV(A,X)135–22
CNPH*4821A**	0.98	0.91	58CV(A,X)135–22
CNPV*4824A**	0.98	0.91	58CV(A,X)135–22
CSPH*3612A**	0.98	0.90	58CV(A,X)135–22
CSPH*4212A**	0.98	0.91	58CV(A,X)135–22
CSPH*4812A**	0.99	0.91	58CV(A,X)135–22
CAP**4224A**	0.97	0.90	58CV(A,X)155–22
CAP**4824A**	0.98	0.91	58CV(A,X)155–22
CNPH*3617A**	0.96	0.92	58CV(A,X)155–22
CNPH*4221A**	0.97	0.90	58CV(A,X)155–22
CNPH*4821A**	0.98	0.91	58CV(A,X)155–22
CNPV*4824A**	0.98	0.91	58CV(A,X)155–22
CSPH*3612A**	0.98	0.91	58CV(A,X)155–22
CSPH*4212A**	0.99	0.91	58CV(A,X)155–22
CSPH*4812A**	0.99	0.91	58CV(A,X)155–22
CAP**3619A**	0.95	0.99	58HDV040––12
CNPH*3617A**	0.95	0.99	58HDV040––12
CNPH*4221A**	0.96	0.96	58HDV040––12
CNPH*4321A**	0.99	0.99	58HDV040––12
CNPV*3617A**	0.95	0.99	58HDV040––12
CNPV*3621A**	0.95	0.99	58HDV040––12
CNPV*3717A**	0.99	0.99	58HDV040––12
CNPV*4217A**	0.97	0.97	58HDV040––12
CNPV*4221A**	0.96	0.96	58HDV040––12
CSPH*3612A**	0.97	0.97	58HDV040––12
CSPH*4212A**	0.98	0.98	58HDV040––12
CAP**3619A**	0.96	0.96	58HDV060––12
CAP**4823A**	0.98	0.98	58HDV060––12
CNPH*3617A**	0.95	0.95	58HDV060––12
CNPH*4221A**	0.97	0.97	58HDV060––12
CNPH*4321A**	1.00	0.96	58HDV060––12
CNPV*3617A**	0.95	0.95	58HDV060––12
CNPV*3621A**	0.96	0.96	58HDV060––12
CNPV*3717A**	0.99	0.95	58HDV060––12
CNPV*4217A**	0.98	0.98	58HDV060––12
CNPV*4221A**	0.97	0.97	58HDV060––12
CSPH*3612A**	0.98	0.98	58HDV060––12
CSPH*4212A**	0.99	0.99	58HDV060––12
CAP**4823A**	0.99	0.95	58HDV080––20
CNPH*3617A**	0.97	0.97	58HDV080––20
CNPH*4221A**	0.98	0.94	58HDV080––20
CNPH*4321A**	1.01	0.94	58HDV080––20
CNPV*3621A**	0.97	0.97	58HDV080––20
CNPV*4221A**	0.98	0.94	58HDV080––20
CNPV*4324A**	1.01	0.93	58HDV080––20
CSPH*3612A**	0.99	0.95	58HDV080––20
CSPH*4212A**	1.00	0.96	58HDV080––20
CNPH*3617A**	0.96	0.92	58HDV100––20
CNPH*4221A**	0.98	0.94	58HDV100––20
CNPH*4321A**	1.01	0.93	58HDV100––20
CNPV*4324A**	1.01	0.93	58HDV100––20
CSPH*3612A**	0.99	0.95	58HDV100––20
CSPH*4212A**	0.99	0.92	58HDV100––20
CAP**3617A**	0.97	0.93	58ME(B,C)060–12
CAP**3621A**	0.97	0.93	58ME(B,C)060–12

COOLING INDOOR MODEL	CAPACITY	POWER	FURNACE MODEL
CAP**4221A**	0.98	0.94	58ME(B,C)060–12
CAP**4817A**	0.99	0.92	58ME(B,C)060–12
CAP**4821A**	0.99	0.91	58ME(B,C)060–12
CNPH*3617A**	0.96	0.96	58ME(B,C)060–12
CNPH*4221A**	0.97	0.93	58ME(B,C)060–12
CNPH*4821A**	0.99	0.92	58ME(B,C)060–12
CNPV*3617A**	0.96	0.96	58ME(B,C)060–12
CNPV*3621A**	0.96	0.96	58ME(B,C)060–12
CNPV*3717A**	1.00	0.92	58ME(B,C)060–12
CNPV*4217A**	0.98	0.94	58ME(B,C)060–12
CNPV*4221A**	0.97	0.93	58ME(B,C)060–12
CNPV*4821A**	0.99	0.92	58ME(B,C)060–12
CSPH*3612A**	0.98	0.94	58ME(B,C)060–12
CSPH*4212A**	0.99	0.92	58ME(B,C)060–12
CSPH*4812A**	0.99	0.92	58ME(B,C)060–12
CAP**3617A**	0.96	0.92	58ME(B,C)080–12
CAP**3621A**	0.97	0.93	58ME(B,C)080–12
CAP**4221A**	0.97	0.93	58ME(B,C)080–12
CAP**4817A**	0.99	0.91	58ME(B,C)080–12
CAP**4821A**	0.98	0.91	58ME(B,C)080–12
CNPH*3617A**	0.96	0.92	58ME(B,C)080–12
CNPH*4221A**	0.97	0.93	58ME(B,C)080–12
CNPH*4821A**	0.99	0.91	58ME(B,C)080–12
CNPV*3617A**	0.96	0.96	58ME(B,C)080–12
CNPV*3621A**	0.96	0.92	58ME(B,C)080–12
CNPV*3717A**	0.99	0.92	58ME(B,C)080–12
CNPV*4217A**	0.98	0.94	58ME(B,C)080–12
CNPV*4221A**	0.97	0.93	58ME(B,C)080–12
CNPV*4821A**	0.99	0.91	58ME(B,C)080–12
CSPH*3612A**	0.98	0.91	58ME(B,C)080–12
CSPH*4212A**	0.99	0.91	58ME(B,C)080–12
CSPH*4812A**	0.99	0.92	58ME(B,C)080–12
CAP**3617A**	0.97	0.93	58ME(B,C)080–16
CAP**3621A**	0.97	0.93	58ME(B,C)080–16
CAP**4221A**	0.97	0.93	58ME(B,C)080–16
CAP**4817A**	0.99	0.92	58ME(B,C)080–16
CAP**4821A**	0.99	0.91	58ME(B,C)080–16
CNPH*3617A**	0.96	0.96	58ME(B,C)080–16
CNPH*4221A**	0.97	0.93	58ME(B,C)080–16
CNPH*4821A**	0.99	0.92	58ME(B,C)080–16
CNPV*3617A**	0.96	0.96	58ME(B,C)080–16
CNPV*3621A**	0.96	0.96	58ME(B,C)080–16
CNPV*3717A**	1.00	0.92	58ME(B,C)080–16
CNPV*4217A**	0.98	0.94	58ME(B,C)080–16
CNPV*4221A**	0.97	0.93	58ME(B,C)080–16
CNPV*4821A**	0.99	0.92	58ME(B,C)080–16
CSPH*3612A**	0.98	0.94	58ME(B,C)080–16
CSPH*4212A**	0.99	0.92	58ME(B,C)080–16
CSPH*4812A**	0.99	0.92	58ME(B,C)080–16
CAP**3621A**	0.97	0.89	58ME(B,C)100–20
CAP**4221A**	0.97	0.90	58ME(B,C)100–20
CAP**4224A**	0.97	0.90	58ME(B,C)100–20
CAP**4821A**	0.98	0.91	58ME(B,C)100–20
CAP**4824A**	0.98	0.91	58ME(B,C)100–20
CNPH*3617A**	0.95	0.92	58ME(B,C)100–20
CNPH*4221A**	0.97	0.89	58ME(B,C)100–20

COOLING INDOOR MODEL	CAPACITY	POWER	FURNACE MODEL
CNPH*4821A**	0.99	0.91	58ME(B,C)100–20
CNPV*3621A**	0.95	0.92	58ME(B,C)100–20
CNPV*4221A**	0.97	0.89	58ME(B,C)100–20
CNPV*4821A**	0.99	0.91	58ME(B,C)100–20
CNPV*4824A**	0.99	0.91	58ME(B,C)100–20
CSPH*3612A**	0.98	0.91	58ME(B,C)100–20
CSPH*4212A**	0.99	0.91	58ME(B,C)100–20
CSPH*4812A**	0.99	0.91	58ME(B,C)100–20
CAP**3617A**	0.97	0.93	58MEB040–12
CAP**3621A**	0.97	0.93	58MEB040–12
CAP**4221A**	0.97	0.93	58MEB040–12
CAP**4817A**	0.99	0.91	58MEB040–12
CAP**4821A**	0.98	0.91	58MEB040–12
CNPH*3617A**	0.96	0.92	58MEB040–12
CNPH*4221A**	0.97	0.93	58MEB040–12
CNPH*4821A**	0.99	0.91	58MEB040–12
CNPV*3617A**	0.96	0.96	58MEB040–12
CNPV*3621A**	0.96	0.92	58MEB040–12
CNPV*3717A**	1.00	0.92	58MEB040–12
CNPV*4217A**	0.98	0.94	58MEB040–12
CNPV*4221A**	0.97	0.93	58MEB040–12
CNPV*4821A**	0.99	0.91	58MEB040–12
CSPH*3612A**	0.98	0.91	58MEB040–12
CSPH*4212A**	0.99	0.91	58MEB040–12
CSPH*4812A**	0.99	0.92	58MEB040–12
CAP**3617A**	0.96	0.92	58MV(B,C)060–14
CAP**3621A**	0.96	0.92	58MV(B,C)060–14
CAP**4221A**	0.97	0.93	58MV(B,C)060–14
CAP**4817A**	0.99	0.91	58MV(B,C)060–14
CAP**4821A**	0.98	0.91	58MV(B,C)060–14
CNPH*3617A**	0.96	0.96	58MV(B,C)060–14
CNPH*4221A**	0.97	0.93	58MV(B,C)060–14
CNPH*4821A**	0.98	0.91	58MV(B,C)060–14
CNPV*3617A**	0.96	0.96	58MV(B,C)060–14
CNPV*3621A**	0.96	0.96	58MV(B,C)060–14
CNPV*3717A**	0.99	0.92	58MV(B,C)060–14
CNPV*4217A**	0.98	0.94	58MV(B,C)060–14
CNPV*4221A**	0.97	0.93	58MV(B,C)060–14
CNPV*4821A**	0.98	0.91	58MV(B,C)060–14
CSPH*3612A**	0.98	0.94	58MV(B,C)060–14
CSPH*4212A**	0.99	0.91	58MV(B,C)060–14
CSPH*4812A**	0.99	0.91	58MV(B,C)060–14
CAP**3621A**	0.96	0.96	58MV(B,C)080–14
CAP**4221A**	0.97	0.93	58MV(B,C)080–14
CAP**4224A**	0.97	0.93	58MV(B,C)080–14
CAP**4821A**	0.98	0.94	58MV(B,C)080–14
CAP**4824A**	0.98	0.94	58MV(B,C)080–14
CAP**6021A**	0.99	0.95	58MV(B,C)080–14
CNPH*3617A**	0.95	0.95	58MV(B,C)080–14
CNPH*4221A**	0.97	0.93	58MV(B,C)080–14
CNPH*4821A**	0.98	0.94	58MV(B,C)080–14
CNPV*3621A**	0.95	0.95	58MV(B,C)080–14
CNPV*4221A**	0.97	0.97	58MV(B,C)080–14
CNPV*4821A**	0.98	0.94	58MV(B,C)080–14
CNPV*4824A**	0.98	0.94	58MV(B,C)080–14
CSPH*3612A**	0.98	0.94	58MV(B,C)080–14

DETAILED COOLING CAPACITIES# (CONT.)

24ACC636A30 Outdoor Section With CNPV*3717A** Indoor Section**

COOLING INDOOR MODEL	CAPACITY	POWER	FURNACE MODEL
CSPH*4212A**	0.98	0.94	58MV(B,C)080–14
CSPH*4812A**	0.99	0.95	58MV(B,C)080–14
CAP**3621A**	0.95	0.92	58MV(B,C)080–20
CAP**4221A**	0.97	0.93	58MV(B,C)080–20
CAP**4224A**	0.97	0.93	58MV(B,C)080–20
CAP**4821A**	0.98	0.94	58MV(B,C)080–20
CAP**4824A**	0.98	0.91	58MV(B,C)080–20
CNPH*3617A**	0.95	0.95	58MV(B,C)080–20
CNPH*4221A**	0.97	0.93	58MV(B,C)080–20
CNPH*4821A**	0.98	0.90	58MV(B,C)080–20
CNPV*3621A**	0.95	0.95	58MV(B,C)080–20
CNPV*4221A**	0.97	0.93	58MV(B,C)080–20
CNPV*4821A**	0.98	0.90	58MV(B,C)080–20
CNPV*4824A**	0.98	0.90	58MV(B,C)080–20
CSPH*3612A**	0.98	0.94	58MV(B,C)080–20
CSPH*4212A**	0.98	0.91	58MV(B,C)080–20
CSPH*4812A**	0.98	0.91	58MV(B,C)080–20
CAP**3621A**	0.96	0.92	58MV(B,C)100–20
CAP**4221A**	0.97	0.93	58MV(B,C)100–20
CAP**4224A**	0.97	0.93	58MV(B,C)100–20
CAP**4821A**	0.98	0.91	58MV(B,C)100–20
CAP**4824A**	0.98	0.91	58MV(B,C)100–20
CNPH*3617A**	0.96	0.96	58MV(B,C)100–20
CNPH*4221A**	0.97	0.93	58MV(B,C)100–20
CNPH*4821A**	0.98	0.91	58MV(B,C)100–20
CNPV*3621A**	0.96	0.96	58MV(B,C)100–20
CNPV*4221A**	0.97	0.93	58MV(B,C)100–20
CNPV*4821A**	0.98	0.91	58MV(B,C)100–20
CNPV*4824A**	0.98	0.91	58MV(B,C)100–20
CSPH*3612A**	0.98	0.94	58MV(B,C)100–20
CSPH*4212A**	0.98	0.91	58MV(B,C)100–20
CSPH*4812A**	0.99	0.91	58MV(B,C)100–20
CAP**4224A**	0.97	0.89	58MV(B,C)120–20
CAP**4824A**	0.98	0.90	58MV(B,C)120–20
CNPH*3617A**	0.95	0.92	58MV(B,C)120–20
CNPH*4221A**	0.97	0.93	58MV(B,C)120–20
CNPH*4821A**	0.98	0.91	58MV(B,C)120–20
CNPV*4824A**	0.98	0.91	58MV(B,C)120–20
CSPH*3612A**	0.98	0.90	58MV(B,C)120–20
CSPH*4212A**	0.98	0.91	58MV(B,C)120–20
CSPH*4812A**	0.99	0.91	58MV(B,C)120–20
CAP**4224A**	0.96	0.92	58MVB040–14
CAP**4824A**	0.97	0.93	58MVB040–14
CNPH*3617A**	0.95	0.95	58MVB040–14
CNPH*4221A**	0.96	0.96	58MVB040–14
CNPH*4821A**	0.98	0.94	58MVB040–14
CNPV*4824A**	0.98	0.94	58MVB040–14
CSPH*3612A**	0.97	0.93	58MVB040–14
CSPH*4212A**	0.98	0.94	58MVB040–14
CSPH*4812A**	0.98	0.94	58MVB040–14
CAP**3614A**	0.95	0.99	58PH*045–08
CAP**3617A**	0.95	0.95	58PH*045–08
CAP**4817A**	0.98	0.98	58PH*045–08
CNPH*3617A**	0.95	0.96	58PH*045–08
CNPH*4221A**	0.97	0.97	58PH*045–08
CNPH*4821A**	0.98	0.98	58PH*045–08

COOLING INDOOR MODEL	CAPACITY	POWER	FURNACE MODEL
CNPV*3617A**	0.95	0.99	58PH*045–08
CNPV*3717A**	0.99	0.99	58PH*045–08
CNPV*4217A**	0.97	1.01	58PH*045–08
CSPH*3612A**	0.98	0.98	58PH*045–08
CSPH*4212A**	0.98	0.98	58PH*045–08
CSPH*4812A**	0.99	0.99	58PH*045–08
CAP**3617A**	0.96	0.96	58PH*070–16
CAP**3621A**	0.96	0.96	58PH*070–16
CAP**4221A**	0.97	0.97	58PH*070–16
CAP**4817A**	0.98	0.98	58PH*070–16
CAP**4821A**	0.98	0.98	58PH*070–16
CNPH*3617A**	0.95	0.95	58PH*070–16
CNPH*4221A**	0.97	0.97	58PH*070–16
CNPH*4821A**	0.98	0.94	58PH*070–16
CNPV*3617A**	0.95	0.95	58PH*070–16
CNPV*3621A**	0.95	0.95	58PH*070–16
CNPV*3717A**	0.99	0.95	58PH*070–16
CNPV*4217A**	0.97	0.97	58PH*070–16
CNPV*4221A**	0.97	0.97	58PH*070–16
CNPV*4821A**	0.98	0.94	58PH*070–16
CSPH*3612A**	0.98	0.98	58PH*070–16
CSPH*4212A**	0.98	0.94	58PH*070–16
CSPH*4812A**	0.99	0.95	58PH*070–16
CAP**3621A**	0.97	0.93	58PH*090–16
CAP**4221A**	0.97	0.90	58PH*090–16
CAP**4224A**	0.98	0.90	58PH*090–16
CAP**4821A**	0.99	0.91	58PH*090–16
CAP**4824A**	0.99	0.91	58PH*090–16
CNPH*3617A**	0.96	0.92	58PH*090–16
CNPH*4221A**	0.97	0.93	58PH*090–16
CNPH*4821A**	0.99	0.91	58PH*090–16
CNPV*3621A**	0.96	0.92	58PH*090–16
CNPV*4221A**	0.97	0.93	58PH*090–16
CNPV*4821A**	0.99	0.91	58PH*090–16
CNPV*4824A**	0.99	0.91	58PH*090–16
CSPH*3612A**	0.98	0.91	58PH*090–16
CSPH*4212A**	0.99	0.91	58PH*090–16
CSPH*4812A**	0.99	0.92	58PH*090–16
CAP**3621A**	0.97	0.93	58PH*110–20
CAP**4221A**	0.98	0.90	58PH*110–20
CAP**4224A**	0.98	0.90	58PH*110–20
CAP**4821A**	0.99	0.91	58PH*110–20
CAP**4824A**	0.99	0.92	58PH*110–20
CNPH*3617A**	0.96	0.92	58PH*110–20
CNPH*4221A**	0.98	0.90	58PH*110–20
CNPH*4821A**	0.99	0.92	58PH*110–20
CNPV*3621A**	0.97	0.93	58PH*110–20
CNPV*4221A**	0.98	0.90	58PH*110–20
CNPV*4821A**	0.99	0.92	58PH*110–20
CNPV*4824A**	0.99	0.92	58PH*110–20
CSPH*3612A**	0.99	0.91	58PH*110–20
CSPH*4212A**	0.99	0.92	58PH*110–20
CSPH*4812A**	1.00	0.92	58PH*110–20
CAP**3617A**	0.96	0.92	58UVB060–14
CAP**3617A**	0.96	0.92	58UVB060–14
CAP**3621A**	0.96	0.92	58UVB060–14

COOLING INDOOR MODEL	CAPACITY	POWER	FURNACE MODEL
CAP**3621A**	0.96	0.92	58UVB060–14
CAP**4221A**	0.97	0.93	58UVB060–14
CAP**4221A**	0.97	0.93	58UVB060–14
CAP**4817A**	0.99	0.91	58UVB060–14
CAP**4817A**	0.99	0.91	58UVB060–14
CAP**4821A**	0.98	0.91	58UVB060–14
CAP**4821A**	0.98	0.91	58UVB060–14
CNPV*3617A**	0.96	0.96	58UVB060–14
CNPV*3617A**	0.96	0.96	58UVB060–14
CNPV*3621A**	0.96	0.96	58UVB060–14
CNPV*3621A**	0.96	0.96	58UVB060–14
CNPV*3717A**	0.99	0.92	58UVB060–14
CNPV*3717A**	0.99	0.92	58UVB060–14
CNPV*4217A**	0.98	0.94	58UVB060–14
CNPV*4217A**	0.98	0.94	58UVB060–14
CNPV*4221A**	0.97	0.93	58UVB060–14
CNPV*4221A**	0.97	0.93	58UVB060–14
CNPV*4821A**	0.98	0.91	58UVB060–14
CNPV*4821A**	0.98	0.91	58UVB060–14
CAP**3621A**	0.96	0.96	58UVB080–14
CAP**3621A**	0.96	0.96	58UVB080–14
CAP**4221A**	0.97	0.93	58UVB080–14
CAP**4221A**	0.97	0.93	58UVB080–14
CAP**4224A**	0.97	0.93	58UVB080–14
CAP**4224A**	0.97	0.93	58UVB080–14
CAP**4821A**	0.98	0.94	58UVB080–14
CAP**4821A**	0.98	0.94	58UVB080–14
CAP**4824A**	0.98	0.94	58UVB080–14
CAP**4824A**	0.98	0.94	58UVB080–14
CAP**6021A**	0.99	0.95	58UVB080–14
CAP**6021A**	0.99	0.95	58UVB080–14
CNPV*3621A**	0.95	0.95	58UVB080–14
CNPV*3621A**	0.95	0.95	58UVB080–14
CNPV*4221A**	0.97	0.97	58UVB080–14
CNPV*4221A**	0.97	0.97	58UVB080–14
CNPV*4821A**	0.98	0.94	58UVB080–14
CNPV*4821A**	0.98	0.94	58UVB080–14
CNPV*4824A**	0.98	0.94	58UVB080–14
CNPV*4824A**	0.98	0.94	58UVB080–14
CAP**3621A**	0.95	0.92	58UVB080–20
CAP**3621A**	0.95	0.92	58UVB080–20
CAP**4221A**	0.97	0.93	58UVB080–20
CAP**4221A**	0.97	0.93	58UVB080–20
CAP**4224A**	0.97	0.93	58UVB080–20
CAP**4224A**	0.97	0.93	58UVB080–20
CAP**4821A**	0.98	0.94	58UVB080–20
CAP**4821A**	0.98	0.94	58UVB080–20
CAP**4824A**	0.98	0.91	58UVB080–20
CAP**4824A**	0.98	0.91	58UVB080–20
CNPV*3621A**	0.95	0.95	58UVB080–20
CNPV*3621A**	0.95	0.95	58UVB080–20
CNPV*4221A**	0.97	0.93	58UVB080–20
CNPV*4221A**	0.97	0.93	58UVB080–20
CNPV*4821A**	0.98	0.90	58UVB080–20
CNPV*4821A**	0.98	0.90	58UVB080–20
CNPV*4824A**	0.98	0.90	58UVB080–20

DETAILED COOLING CAPACITIES# (CONT.)

24ACC636A30 Outdoor Section With CNPV*3717A** Indoor Section**

COOLING INDOOR MODEL	CAPACITY	POWER	FURNACE MODEL
CNPV*4824A**	0.98	0.90	58UVB080–20
CAP**3621A**	0.96	0.92	58UVB100–20
CAP**3621A**	0.96	0.92	58UVB100–20
CAP**4221A**	0.97	0.93	58UVB100–20
CAP**4221A**	0.97	0.93	58UVB100–20
CAP**4224A**	0.97	0.93	58UVB100–20
CAP**4224A**	0.97	0.93	58UVB100–20
CAP**4821A**	0.98	0.91	58UVB100–20
CAP**4821A**	0.98	0.91	58UVB100–20
CAP**4824A**	0.98	0.91	58UVB100–20
CAP**4824A**	0.98	0.91	58UVB100–20
CNPV*3621A**	0.96	0.96	58UVB100–20
CNPV*3621A**	0.96	0.96	58UVB100–20
CNPV*4221A**	0.97	0.93	58UVB100–20
CNPV*4221A**	0.97	0.93	58UVB100–20
CNPV*4821A**	0.98	0.91	58UVB100–20
CNPV*4821A**	0.98	0.91	58UVB100–20
CNPV*4824A**	0.98	0.91	58UVB100–20
CNPV*4824A**	0.98	0.91	58UVB100–20
CAP**4224A**	0.97	0.89	58UVB120–20
CAP**4224A**	0.97	0.89	58UVB120–20
CAP**4824A**	0.98	0.90	58UVB120–20
CAP**4824A**	0.98	0.90	58UVB120–20
CNPV*4824A**	0.98	0.91	58UVB120–20
CNPV*4824A**	0.98	0.91	58UVB120–20
CAP**3617A**	0.96	0.96	58VLR105–12
CAP**3621A**	0.96	0.96	58VLR105–12
CAP**4221A**	0.97	0.93	58VLR105–12
CAP**4817A**	0.99	0.95	58VLR105–12
CAP**4821A**	0.98	0.94	58VLR105–12
CNPH*3617A**	0.96	0.96	58VLR105–12
CNPH*4221A**	0.97	0.97	58VLR105–12
CNPH*4821A**	0.98	0.94	58VLR105–12
CNPV*3617A**	0.96	0.96	58VLR105–12
CNPV*3621A**	0.96	0.96	58VLR105–12
CNPV*3717A**	0.99	0.95	58VLR105–12
CNPV*4217A**	0.98	0.94	58VLR105–12
CNPV*4221A**	0.97	0.97	58VLR105–12
CNPV*4821A**	0.98	0.94	58VLR105–12
CSPH*3612A**	0.98	0.94	58VLR105–12
CSPH*4212A**	0.99	0.95	58VLR105–12
CSPH*4812A**	0.99	0.95	58VLR105–12
CAP**3621A**	0.96	0.92	58VLR120–20
CAP**4221A**	0.97	0.89	58VLR120–20
CAP**4224A**	0.97	0.89	58VLR120–20
CAP**4821A**	0.98	0.90	58VLR120–20
CAP**4824A**	0.98	0.90	58VLR120–20
CNPH*3617A**	0.95	0.92	58VLR120–20
CNPH*4221A**	0.97	0.93	58VLR120–20
CNPH*4821A**	0.98	0.91	58VLR120–20
CNPV*3621A**	0.95	0.92	58VLR120–20
CNPV*4221A**	0.97	0.93	58VLR120–20
CNPV*4821A**	0.98	0.91	58VLR120–20
CNPV*4824A**	0.98	0.91	58VLR120–20
CSPH*3612A**	0.98	0.90	58VLR120–20
CSPH*4212A**	0.98	0.91	58VLR120–20

COOLING INDOOR MODEL	CAPACITY	POWER	FURNACE MODEL
CSPH*4812A**	0.99	0.91	58VLR120–20
CAP**3617A**	0.95	0.95	58VMR105–12
CAP**3621A**	0.95	0.92	58VMR105–12
CAP**4221A**	0.96	0.92	58VMR105–12
CAP**4817A**	0.98	0.94	58VMR105–12
CAP**4821A**	0.97	0.93	58VMR105–12
CNPH*3617A**	0.95	0.95	58VMR105–12
CNPH*4221A**	0.96	0.96	58VMR105–12
CNPH*4821A**	0.97	0.93	58VMR105–12
CNPV*3617A**	0.95	0.95	58VMR105–12
CNPV*3621A**	0.95	0.95	58VMR105–12
CNPV*3717A**	0.98	0.94	58VMR105–12
CNPV*4217A**	0.97	0.93	58VMR105–12
CNPV*4221A**	0.96	0.96	58VMR105–12
CNPV*4821A**	0.97	0.93	58VMR105–12
CSPH*3612A**	0.97	0.93	58VMR105–12
CSPH*4212A**	0.98	0.94	58VMR105–12
CSPH*4812A**	0.98	0.94	58VMR105–12
CAP**3621A**	0.95	0.92	58VMR120–20
CAP**4221A**	0.96	0.92	58VMR120–20
CAP**4224A**	0.96	0.92	58VMR120–20
CAP**4821A**	0.97	0.93	58VMR120–20
CAP**4824A**	0.98	0.90	58VMR120–20
CNPH*3617A**	0.95	0.95	58VMR120–20
CNPH*4221A**	0.97	0.93	58VMR120–20
CNPH*4821A**	0.98	0.90	58VMR120–20
CNPV*3621A**	0.95	0.95	58VMR120–20
CNPV*4221A**	0.97	0.93	58VMR120–20
CNPV*4821A**	0.98	0.90	58VMR120–20
CNPV*4824A**	0.98	0.90	58VMR120–20
CSPH*3612A**	0.98	0.94	58VMR120–20
CSPH*4212A**	0.98	0.94	58VMR120–20
CSPH*4812A**	0.98	0.91	58VMR120–20
CAP**3617A**	0.87	0.84	59*N*A060V17**14
CAP**3619A**	0.87	0.84	59*N*A060V17**14
CAP**3621A**	0.87	0.84	59*N*A060V17**14
CAP**4221A**	0.95	0.91	59*N*A060V17**14
CNPH*3617A**	0.87	0.85	59*N*A060V17**14
CNPH*4221A**	0.95	0.92	59*N*A060V17**14
CNPH*4321A**	0.98	0.92	59*N*A060V17**14
CNPV*3617A**	0.87	0.85	59*N*A060V17**14
CNPV*3621A**	0.87	0.85	59*N*A060V17**14
CNPV*3717A**	0.98	0.92	59*N*A060V17**14
CNPV*4217A**	0.96	0.92	59*N*A060V17**14
CNPV*4221A**	0.95	0.92	59*N*A060V17**14
CSPH*3612A**	0.97	0.92	59*N*A060V17**14
CSPH*4212A**	0.97	0.92	59*N*A060V17**14
CAP**3617A**	0.87	0.83	59*N*A080V17**14
CAP**3619A**	0.87	0.83	59*N*A080V17**14
CAP**3621A**	0.87	0.83	59*N*A080V17**14
CAP**4221A**	0.95	0.90	59*N*A080V17**14
CNPH*3617A**	0.87	0.84	59*N*A080V17**14
CNPH*4221A**	0.95	0.90	59*N*A080V17**14
CNPH*4321A**	0.98	0.91	59*N*A080V17**14
CNPV*3617A**	0.87	0.84	59*N*A080V17**14
CNPV*3621A**	0.87	0.84	59*N*A080V17**14

COOLING INDOOR MODEL	CAPACITY	POWER	FURNACE MODEL
CNPV*3717A**	0.98	0.91	59*N*A080V17**14
CNPV*4217A**	0.97	0.91	59*N*A080V17**14
CNPV*4221A**	0.95	0.90	59*N*A080V17**14
CSPH*3612A**	0.97	0.91	59*N*A080V17**14
CSPH*4212A**	0.97	0.92	59*N*A080V17**14
CAP**3619A**	0.95	0.91	59*N*A100V21**20
CAP**3621A**	0.95	0.90	59*N*A100V21**20
CAP**4221A**	0.96	0.91	59*N*A100V21**20
CAP**4224A**	0.96	0.91	59*N*A100V21**20
CNPH*3617A**	0.87	0.84	59*N*A100V21**20
CNPH*4221A**	0.96	0.91	59*N*A100V21**20
CNPH*4321A**	0.99	0.91	59*N*A100V21**20
CNPV*3621A**	0.87	0.84	59*N*A100V21**20
CNPV*4221A**	0.96	0.91	59*N*A100V21**20
CNPV*4324A**	0.99	0.91	59*N*A100V21**20
CSPH*3612A**	0.97	0.92	59*N*A100V21**20
CSPH*4212A**	0.98	0.91	59*N*A100V21**20
CAP**4224A**	0.96	0.89	59*N*A120V24**22
CNPH*3617A**	0.95	0.90	59*N*A120V24**22
CNPH*4221A**	0.96	0.91	59*N*A120V24**22
CNPH*4321A**	0.99	0.91	59*N*A120V24**22
CNPV*4324A**	0.99	0.90	59*N*A120V24**22
CSPH*3612A**	0.97	0.90	59*N*A120V24**22
CSPH*4212A**	0.98	0.90	59*N*A120V24**22
CAP**3617A**	0.95	0.93	59*P5A060E17**14
CAP**3619A**	0.95	0.93	59*P5A060E17**14
CAP**3621A**	0.96	0.93	59*P5A060E17**14
CAP**4221A**	0.97	0.93	59*P5A060E17**14
CNPH*3617A**	0.95	0.93	59*P5A060E17**14
CNPH*4221A**	0.97	0.93	59*P5A060E17**14
CNPH*4321A**	0.99	0.94	59*P5A060E17**14
CNPV*3617A**	0.95	0.93	59*P5A060E17**14
CNPV*3621A**	0.95	0.93	59*P5A060E17**14
CNPV*3717A**	0.99	0.93	59*P5A060E17**14
CNPV*4217A**	0.97	0.93	59*P5A060E17**14
CNPV*4221A**	0.97	0.93	59*P5A060E17**14
CSPH*3612A**	0.98	0.93	59*P5A060E17**14
CSPH*4212A**	0.98	0.93	59*P5A060E17**14
CAP**3617A**	0.95	0.91	59*P5A080E17**16
CAP**3619A**	0.95	0.91	59*P5A080E17**16
CAP**3621A**	0.95	0.90	59*P5A080E17**16
CAP**4221A**	0.96	0.91	59*P5A080E17**16
CNPH*3617A**	0.87	0.84	59*P5A080E17**16
CNPH*4221A**	0.96	0.91	59*P5A080E17**16
CNPH*4321A**	0.99	0.91	59*P5A080E17**16
CNPV*3617A**	0.87	0.84	59*P5A080E17**16
CNPV*3621A**	0.87	0.84	59*P5A080E17**16
CNPV*3717A**	0.99	0.91	59*P5A080E17**16
CNPV*4217A**	0.97	0.91	59*P5A080E17**16
CNPV*4221A**	0.96	0.91	59*P5A080E17**16
CSPH*3612A**	0.97	0.92	59*P5A080E17**16
CSPH*4212A**	0.98	0.92	59*P5A080E17**16
CAP**3617A**	0.95	0.95	OVLAAB036098
CAP**3619A**	0.95	0.95	OVLAAB036098
CAP**3621A**	0.95	0.95	OVLAAB036098
CAP**4221A**	0.96	0.96	OVLAAB036098

DETAILED COOLING CAPACITIES# (CONT.)

24ACC636A30 Outdoor Section With CNPV*3717A** Indoor Section**

COOLING INDOOR MODEL	CAPACITY	POWER	FURNACE MODEL
CNPH*3617A**	0.95	0.95	OVLAAB036098
CNPH*4221A**	0.96	0.96	OVLAAB036098
CNPH*4321A**	0.98	0.94	OVLAAB036098
CNPV*3617A**	0.95	0.95	OVLAAB036098
CNPV*3621A**	0.95	0.95	OVLAAB036098
CNPV*3717A**	0.98	0.94	OVLAAB036098
CNPV*4217A**	0.97	0.97	OVLAAB036098
CNPV*4221A**	0.96	0.96	OVLAAB036098
CSPH*3612A**	0.97	0.94	OVLAAB036098
CSPH*4212A**	0.98	0.94	OVLAAB036098
CAP**3619A**	0.96	0.96	OVLAAB048112
CAP**3621A**	0.96	0.92	OVLAAB048112
CAP**4221A**	0.97	0.93	OVLAAB048112
CAP**4224A**	0.97	0.93	OVLAAB048112
CNPH*3617A**	0.96	0.96	OVLAAB048112
CNPH*4221A**	0.97	0.93	OVLAAB048112
CNPH*4321A**	0.99	0.95	OVLAAB048112
CNPV*3621A**	0.96	0.96	OVLAAB048112
CNPV*4221A**	0.97	0.93	OVLAAB048112
CNPV*4324A**	1.00	0.92	OVLAAB048112
CSPH*3612A**	0.98	0.94	OVLAAB048112
CSPH*4212A**	0.99	0.95	OVLAAB048112
CAP**3617A**	0.95	0.95	OVMAAB036098
CAP**3619A**	0.95	0.95	OVMAAB036098
CAP**3621A**	0.95	0.95	OVMAAB036098
CAP**4221A**	0.96	0.96	OVMAAB036098
CNPH*3617A**	0.95	0.95	OVMAAB036098
CNPH*4221A**	0.96	0.96	OVMAAB036098
CNPH*4321A**	0.99	0.95	OVMAAB036098
CNPV*3617A**	0.95	0.95	OVMAAB036098
CNPV*3621A**	0.95	0.95	OVMAAB036098
CNPV*3717A**	0.99	0.95	OVMAAB036098
CNPV*4217A**	0.97	0.97	OVMAAB036098
CNPV*4221A**	0.96	0.96	OVMAAB036098
CSPH*3612A**	0.97	0.97	OVMAAB036098
CSPH*4212A**	0.98	0.94	OVMAAB036098
CAP**3617A**	0.96	0.92	OVMAAB042112
CAP**3619A**	0.96	0.92	OVMAAB042112
CAP**3621A**	0.96	0.92	OVMAAB042112
CAP**4221A**	0.97	0.93	OVMAAB042112
CNPH*3617A**	0.95	0.95	OVMAAB042112
CNPH*4221A**	0.97	0.93	OVMAAB042112
CNPH*4321A**	0.99	0.92	OVMAAB042112
CNPV*3617A**	0.95	0.95	OVMAAB042112
CNPV*3621A**	0.95	0.95	OVMAAB042112
CNPV*3717A**	0.99	0.95	OVMAAB042112
CNPV*4217A**	0.97	0.93	OVMAAB042112
CNPV*4221A**	0.97	0.93	OVMAAB042112
CSPH*3612A**	0.98	0.94	OVMAAB042112
CSPH*4212A**	0.98	0.94	OVMAAB042112

See notes on pg. 69

DETAILED COOLING CAPACITIES# (CONT.)

EVAPORATOR AIR		CONDENSER ENTERING AIR TEMPERATURES °F (°C)																	
		75 (23.9)			85 (29.4)			95 (35)			105 (40.6)			115 (46.1)			125 (51.7)		
CFM	EWB °F (°C)	Capacity MBtuh		Total System KW**	Capacity MBtuh		Total System KW**	Capacity MBtuh		Total System KW**	Capacity MBtuh		Total System KW**	Capacity MBtuh		Total System KW**	Capacity MBtuh		Total System KW**
		Total	Sens‡		Total	Sens‡		Total	Sens‡		Total	Sens‡		Total	Sens‡		Total	Sens‡	
24ACC642A**30 Outdoor Section With CNPV*4324A** Indoor Section																			
1225	57 (13.9)	49.58	24.85	2.77	47.31	24.05	3.07	44.88	23.20	3.42	42.30	22.31	3.80	39.58	21.39	4.23	36.71	20.43	4.70
	62 (16.7)	45.17	30.63	2.75	43.10	29.82	3.05	40.90	28.98	3.38	38.55	28.08	3.76	36.07	27.15	4.19	33.47	26.18	4.66
	63 (17.2)††	41.97	29.47	2.74	40.06	28.67	3.03	38.02	27.83	3.36	35.83	26.93	3.74	33.53	26.00	4.17	31.10	25.02	4.64
	67 (19.4)	41.32	36.33	2.74	39.49	35.51	3.03	37.56	34.61	3.36	35.65	35.65	3.74	33.78	33.78	4.17	31.76	31.76	4.64
	72 (22.2)	40.45	40.45	2.73	38.96	38.96	3.03	37.34	37.34	3.36	35.60	35.60	3.74	33.73	33.73	4.17	31.72	31.72	4.64
1400	57 (13.9)	50.40	26.14	2.85	48.02	25.31	3.15	45.48	24.45	3.49	42.82	23.55	3.87	39.99	22.61	4.30	37.02	21.63	4.77
	62 (16.7)	45.95	32.69	2.82	43.80	31.87	3.12	41.50	31.00	3.46	39.07	30.09	3.84	36.51	29.14	4.26	33.83	28.13	4.74
	63 (17.2)††	42.74	31.39	2.81	40.75	30.58	3.10	38.61	29.71	3.44	36.36	28.80	3.82	33.97	27.84	4.24	31.47	26.83	4.71
	67 (19.4)	42.31	39.06	2.81	40.55	40.55	3.10	38.82	38.82	3.44	36.94	36.94	3.82	34.93	34.93	4.25	32.78	32.78	4.72
	72 (22.2)	42.10	42.10	2.81	40.50	40.50	3.10	38.76	38.76	3.44	36.89	36.89	3.82	34.89	34.89	4.25	32.74	32.74	4.72
1575	57 (13.9)	50.98	27.35	2.92	48.52	26.51	3.22	45.91	25.64	3.56	43.16	24.73	3.95	40.25	23.78	4.37	37.22	22.79	4.85
	62 (16.7)	46.53	34.66	2.90	44.31	33.82	3.19	41.95	32.94	3.53	39.45	32.01	3.91	36.83	31.03	4.34	34.11	29.99	4.81
	63 (17.2)††	43.31	33.22	2.88	41.25	32.39	3.17	39.06	31.51	3.51	36.74	30.57	3.89	34.30	29.58	4.31	31.77	28.52	4.78
	67 (19.4)	43.52	43.52	2.88	41.82	41.82	3.18	39.96	39.96	3.52	37.98	37.98	3.90	35.86	35.86	4.33	33.58	33.58	4.80
	72 (22.2)	43.46	43.46	2.88	41.76	41.76	3.18	39.91	39.91	3.52	37.93	37.93	3.90	35.81	35.81	4.33	33.55	33.55	4.80

COOLING INDOOR MODEL	CAPACITY	POWER	FURNACE MODEL
*CNPV*4324A**	1.00	1.00	
CAP**4221A**	0.96	1.01	
CAP**4224A**	0.96	1.01	
CAP**4817A**	0.99	0.99	
CAP**4821A**	0.98	0.98	
CAP**4823A**	0.98	0.98	
CAP**4824A**	0.98	0.98	
CAP**6021A**	1.00	1.00	
CAP**6024A**	1.00	1.00	
CAP**6025A**	1.00	1.00	
CNPF*4818A**	0.98	0.98	
CNPH*4221A**	0.96	0.96	
CNPH*4321A**	1.00	1.00	
CNPH*4821A**	0.99	0.99	
CNPH*6024A**	1.00	1.00	
CNPV*4217A**	0.98	0.98	
CNPV*4221A**	0.96	0.96	
CNPV*4821A**	0.99	0.99	
CNPV*4824A**	0.99	0.99	
CNPV*6024A**	1.00	1.00	
CSPH*4212A**	0.99	0.99	
CSPH*4812A**	0.99	0.99	
CSPH*6012A**	1.00	1.00	
FB4CNF042	0.99	0.95	
FB4CNF042	0.99	0.95	
FB4CNF048	1.00	0.96	
FB4CNF048	1.00	0.96	
FE4AN(B,F)003	0.96	0.89	
FE4AN(B,F)005	0.99	0.91	
FE4ANB006	1.00	0.92	
FE5ANB004	1.00	0.92	
FV4BN(B,F)003	0.96	0.91	
FV4BN(B,F)005	1.00	0.89	
FV4BNB006	1.01	0.89	
FV4CN(B,F)003	0.96	0.89	

COOLING INDOOR MODEL	CAPACITY	POWER	FURNACE MODEL
FV4CN(B,F)005	0.99	0.91	
FV4CNB006	1.00	0.92	
FX4CN(B,F)042	1.00	0.96	
FX4CN(B,F)048	1.01	0.93	
FX4CN(B,F)060	1.01	1.00	
FX4DN(B,F)043	0.99	0.95	
FX4DN(B,F)049	1.01	0.93	
FY4ANB060	1.01	1.01	
FY4ANF042	0.99	1.01	
FY4ANF048	1.00	1.00	
FY5BNF042	0.98	0.94	
FY5BNF042	0.99	0.99	
FY5BNF048	1.00	0.96	
FY5BNF048	1.00	1.00	
CAP**4817A**	0.98	0.94	58CV(A,X)070–12
CNPH*4221A**	0.95	0.91	58CV(A,X)070–12
CNPH*4321A**	0.98	0.94	58CV(A,X)070–12
CNPH*4821A**	0.98	0.94	58CV(A,X)070–12
CNPH*6024A**	1.00	1.00	58CV(A,X)070–12
CNPV*4217A**	0.96	0.93	58CV(A,X)070–12
CSPH*4212A**	0.98	0.94	58CV(A,X)070–12
CSPH*4812A**	0.98	0.94	58CV(A,X)070–12
CSPH*6012A**	0.99	0.91	58CV(A,X)070–12
CAP**4221A**	0.95	0.88	58CV(A,X)090–16
CAP**4817A**	0.98	0.90	58CV(A,X)090–16
CAP**4821A**	0.98	0.90	58CV(A,X)090–16
CAP**6021A**	0.99	0.91	58CV(A,X)090–16
CNPH*4221A**	0.96	0.93	58CV(A,X)090–16
CNPH*4321A**	0.99	0.91	58CV(A,X)090–16
CNPH*4821A**	0.98	0.90	58CV(A,X)090–16
CNPH*6024A**	0.99	0.91	58CV(A,X)090–16
CNPV*4217A**	0.96	0.93	58CV(A,X)090–16
CNPV*4221A**	0.96	0.93	58CV(A,X)090–16
CNPV*4821A**	0.98	0.90	58CV(A,X)090–16
CSPH*4212A**	0.98	0.90	58CV(A,X)090–16

COOLING INDOOR MODEL	CAPACITY	POWER	FURNACE MODEL
CSPH*4812A**	0.98	0.90	58CV(A,X)090–16
CSPH*6012A**	0.99	0.91	58CV(A,X)090–16
CAP**4221A**	0.96	0.89	58CV(A,X)110–20
CAP**4224A**	0.96	0.89	58CV(A,X)110–20
CAP**4821A**	0.98	0.90	58CV(A,X)110–20
CAP**4824A**	0.98	0.90	58CV(A,X)110–20
CAP**6021A**	0.99	0.91	58CV(A,X)110–20
CAP**6024A**	0.99	0.91	58CV(A,X)110–20
CNPH*4221A**	0.96	0.93	58CV(A,X)110–20
CNPH*4321A**	0.99	0.91	58CV(A,X)110–20
CNPH*4821A**	0.98	0.90	58CV(A,X)110–20
CNPH*6024A**	1.00	1.00	58CV(A,X)110–20
CNPV*4221A**	0.96	0.93	58CV(A,X)110–20
CNPV*4324A**	0.99	0.91	58CV(A,X)110–20
CNPV*4821A**	0.98	0.90	58CV(A,X)110–20
CNPV*4824A**	0.98	0.90	58CV(A,X)110–20
CNPV*6024A**	0.99	0.91	58CV(A,X)110–20
CSPH*4212A**	0.98	0.90	58CV(A,X)110–20
CSPH*4812A**	0.99	0.91	58CV(A,X)110–20
CSPH*6012A**	1.00	0.92	58CV(A,X)110–20
CAP**4224A**	0.96	0.89	58CV(A,X)135–22
CAP**4824A**	0.98	0.90	58CV(A,X)135–22
CAP**6024A**	0.99	0.91	58CV(A,X)135–22
CNPH*4221A**	0.96	0.89	58CV(A,X)135–22
CNPH*4321A**	0.99	0.91	58CV(A,X)135–22
CNPH*4821A**	0.98	0.90	58CV(A,X)135–22
CNPH*6024A**	0.99	0.91	58CV(A,X)135–22
CNPV*4324A**	0.99	0.91	58CV(A,X)135–22
CNPV*4824A**	0.98	0.90	58CV(A,X)135–22
CNPV*6024A**	0.99	0.91	58CV(A,X)135–22
CSPH*4212A**	0.98	0.90	58CV(A,X)135–22
CSPH*4812A**	0.99	0.91	58CV(A,X)135–22
CSPH*6012A**	1.00	0.92	58CV(A,X)135–22
CAP**4224A**	0.96	0.89	58CV(A,X)155–22
CAP**4824A**	0.98	0.90	58CV(A,X)155–22

DETAILED COOLING CAPACITIES# (CONT.)

24ACC642A30 Outdoor Section With CNPV*4324A** Indoor Section**

COOLING INDOOR MODEL	CAPACITY	POWER	FURNACE MODEL
CAP**6024A**	0.99	0.91	58CV(A,X)155–22
CNPH*4221A**	0.96	0.89	58CV(A,X)155–22
CNPH*4321A**	0.99	0.91	58CV(A,X)155–22
CNPH*4821A**	0.98	0.90	58CV(A,X)155–22
CNPH*6024A**	0.99	0.91	58CV(A,X)155–22
CNPV*4324A**	0.99	0.91	58CV(A,X)155–22
CNPV*4824A**	0.98	0.90	58CV(A,X)155–22
CNPV*6024A**	0.99	0.91	58CV(A,X)155–22
CSPH*4212A**	0.98	0.90	58CV(A,X)155–22
CSPH*4812A**	0.99	0.91	58CV(A,X)155–22
CSPH*6012A**	1.00	0.92	58CV(A,X)155–22
CAP**4823A**	0.98	0.94	58HDV080––20
CAP**6025A**	1.00	0.92	58HDV080––20
CNPH*4221A**	0.98	0.94	58HDV080––20
CNPH*4321A**	1.01	0.93	58HDV080––20
CNPH*4821A**	1.00	0.92	58HDV080––20
CNPV*4221A**	0.98	0.94	58HDV080––20
CNPV*4324A**	1.01	0.93	58HDV080––20
CNPV*4821A**	1.00	0.92	58HDV080––20
CNPV*4824A**	1.00	0.92	58HDV080––20
CSPH*4212A**	0.99	0.95	58HDV080––20
CSPH*4812A**	0.99	0.95	58HDV080––20
CAP**6025A**	1.00	0.92	58HDV100––20
CNPH*4221A**	0.98	0.94	58HDV100––20
CNPH*4321A**	1.00	0.92	58HDV100––20
CNPH*4821A**	0.99	0.91	58HDV100––20
CNPV*4324A**	1.00	0.92	58HDV100––20
CNPV*4824A**	0.99	0.91	58HDV100––20
CSPH*4212A**	0.99	0.91	58HDV100––20
CSPH*4812A**	0.99	0.91	58HDV100––20
CAP**4221A**	0.96	0.93	58ME(B,C)060–12
CAP**4817A**	0.99	0.91	58ME(B,C)060–12
CAP**4821A**	0.98	0.94	58ME(B,C)060–12
CAP**6021A**	1.00	0.92	58ME(B,C)060–12
CNPH*4221A**	0.96	0.93	58ME(B,C)060–12
CNPH*4321A**	1.00	0.92	58ME(B,C)060–12
CNPH*4821A**	0.99	0.95	58ME(B,C)060–12
CNPH*6024A**	1.00	1.00	58ME(B,C)060–12
CNPV*4217A**	0.98	0.94	58ME(B,C)060–12
CNPV*4221A**	0.96	0.93	58ME(B,C)060–12
CNPV*4821A**	0.99	0.91	58ME(B,C)060–12
CSPH*4212A**	0.99	0.95	58ME(B,C)060–12
CSPH*4812A**	0.99	0.91	58ME(B,C)060–12
CSPH*6012A**	1.00	0.92	58ME(B,C)060–12
CAP**4221A**	0.96	0.93	58ME(B,C)080–12
CAP**4817A**	0.99	0.91	58ME(B,C)080–12
CAP**4821A**	0.98	0.94	58ME(B,C)080–12
CAP**6021A**	1.00	0.92	58ME(B,C)080–12
CNPH*4221A**	0.96	0.93	58ME(B,C)080–12
CNPH*4321A**	1.00	0.92	58ME(B,C)080–12
CNPH*4821A**	0.99	0.91	58ME(B,C)080–12
CNPH*6024A**	1.00	1.00	58ME(B,C)080–12
CNPV*4217A**	0.98	0.94	58ME(B,C)080–12
CNPV*4221A**	0.96	0.93	58ME(B,C)080–12
CNPV*4821A**	0.99	0.91	58ME(B,C)080–12
CSPH*4212A**	0.99	0.91	58ME(B,C)080–12

COOLING INDOOR MODEL	CAPACITY	POWER	FURNACE MODEL
CSPH*4812A**	0.99	0.91	58ME(B,C)080–12
CSPH*6012A**	1.00	0.92	58ME(B,C)080–12
CAP**4221A**	0.96	0.93	58ME(B,C)080–16
CAP**4817A**	0.98	0.90	58ME(B,C)080–16
CAP**4821A**	0.98	0.94	58ME(B,C)080–16
CAP**6021A**	0.99	0.91	58ME(B,C)080–16
CNPH*4221A**	0.96	0.93	58ME(B,C)080–16
CNPH*4321A**	0.99	0.91	58ME(B,C)080–16
CNPH*4821A**	0.98	0.90	58ME(B,C)080–16
CNPH*6024A**	0.99	0.91	58ME(B,C)080–16
CNPV*4217A**	0.96	0.93	58ME(B,C)080–16
CNPV*4221A**	0.96	0.93	58ME(B,C)080–16
CNPV*4821A**	0.98	0.90	58ME(B,C)080–16
CSPH*4212A**	0.98	0.90	58ME(B,C)080–16
CSPH*4812A**	0.99	0.91	58ME(B,C)080–16
CSPH*6012A**	1.00	0.92	58ME(B,C)080–16
CAP**4221A**	0.96	0.89	58ME(B,C)100–20
CAP**4224A**	0.96	0.89	58ME(B,C)100–20
CAP**4821A**	0.98	0.90	58ME(B,C)100–20
CAP**4824A**	0.98	0.90	58ME(B,C)100–20
CAP**6021A**	1.00	0.92	58ME(B,C)100–20
CAP**6024A**	1.00	0.92	58ME(B,C)100–20
CNPH*4221A**	0.96	0.89	58ME(B,C)100–20
CNPH*4321A**	1.00	0.92	58ME(B,C)100–20
CNPH*4821A**	0.99	0.91	58ME(B,C)100–20
CNPH*6024A**	1.00	1.00	58ME(B,C)100–20
CNPV*4221A**	0.96	0.89	58ME(B,C)100–20
CNPV*4324A**	1.00	0.92	58ME(B,C)100–20
CNPV*4821A**	0.99	0.91	58ME(B,C)100–20
CNPV*4824A**	0.99	0.91	58ME(B,C)100–20
CNPV*6024A**	1.00	0.92	58ME(B,C)100–20
CSPH*4212A**	0.99	0.91	58ME(B,C)100–20
CSPH*4812A**	0.99	0.91	58ME(B,C)100–20
CSPH*6012A**	1.00	0.92	58ME(B,C)100–20
CAP**4224A**	0.96	0.89	58ME(B,C)120–20
CAP**4824A**	0.99	0.91	58ME(B,C)120–20
CAP**6024A**	1.00	0.92	58ME(B,C)120–20
CNPH*4221A**	0.96	0.89	58ME(B,C)120–20
CNPH*4321A**	1.00	0.92	58ME(B,C)120–20
CNPH*4821A**	0.99	0.91	58ME(B,C)120–20
CNPH*6024A**	1.00	0.92	58ME(B,C)120–20
CNPV*4324A**	1.00	0.92	58ME(B,C)120–20
CNPV*4824A**	0.99	0.91	58ME(B,C)120–20
CNPV*6024A**	1.00	0.92	58ME(B,C)120–20
CSPH*4212A**	0.99	0.91	58ME(B,C)120–20
CSPH*4812A**	0.99	0.91	58ME(B,C)120–20
CSPH*6012A**	1.00	0.92	58ME(B,C)120–20
CAP**4221A**	0.96	0.93	58MEB040–12
CAP**4817A**	0.99	0.91	58MEB040–12
CAP**4821A**	0.98	0.94	58MEB040–12
CAP**6021A**	1.00	0.92	58MEB040–12
CNPH*4221A**	0.96	0.93	58MEB040–12
CNPH*4321A**	1.00	0.92	58MEB040–12
CNPH*4821A**	0.99	0.91	58MEB040–12
CNPH*6024A**	1.00	1.00	58MEB040–12
CNPV*4217A**	0.98	0.90	58MEB040–12

COOLING INDOOR MODEL	CAPACITY	POWER	FURNACE MODEL
CNPV*4221A**	0.96	0.93	58MEB040–12
CNPV*4821A**	0.99	0.91	58MEB040–12
CSPH*4212A**	0.99	0.91	58MEB040–12
CSPH*4812A**	0.99	0.91	58MEB040–12
CSPH*6012A**	1.00	0.92	58MEB040–12
CAP**4221A**	0.96	0.93	58MV(B,C)060–14
CAP**4817A**	0.99	0.91	58MV(B,C)060–14
CAP**4821A**	0.98	0.94	58MV(B,C)060–14
CAP**6021A**	0.99	0.91	58MV(B,C)060–14
CNPH*4221A**	0.96	0.93	58MV(B,C)060–14
CNPH*4321A**	0.99	0.91	58MV(B,C)060–14
CNPH*4821A**	0.98	0.90	58MV(B,C)060–14
CNPH*6024A**	0.99	0.91	58MV(B,C)060–14
CNPV*4217A**	0.98	0.94	58MV(B,C)060–14
CNPV*4221A**	0.96	0.93	58MV(B,C)060–14
CNPV*4821A**	0.98	0.90	58MV(B,C)060–14
CSPH*4212A**	0.99	0.91	58MV(B,C)060–14
CSPH*4812A**	0.99	0.91	58MV(B,C)060–14
CSPH*6012A**	1.00	0.92	58MV(B,C)060–14
CAP**4221A**	0.95	0.91	58MV(B,C)080–14
CAP**4224A**	0.95	0.91	58MV(B,C)080–14
CAP**4821A**	0.96	0.93	58MV(B,C)080–14
CAP**4824A**	0.96	0.93	58MV(B,C)080–14
CAP**6021A**	0.99	0.95	58MV(B,C)080–14
CAP**6024A**	0.99	0.91	58MV(B,C)080–14
CNPH*4221A**	0.95	0.95	58MV(B,C)080–14
CNPH*4321A**	0.99	0.95	58MV(B,C)080–14
CNPH*4821A**	0.98	0.94	58MV(B,C)080–14
CNPH*6024A**	1.00	1.00	58MV(B,C)080–14
CNPV*4221A**	0.95	0.95	58MV(B,C)080–14
CNPV*4324A**	0.99	0.91	58MV(B,C)080–14
CNPV*4821A**	0.98	0.94	58MV(B,C)080–14
CNPV*4824A**	0.98	0.94	58MV(B,C)080–14
CNPV*6024A**	0.99	0.91	58MV(B,C)080–14
CSPH*4212A**	0.98	0.94	58MV(B,C)080–14
CSPH*4812A**	0.98	0.94	58MV(B,C)080–14
CSPH*6012A**	0.99	0.91	58MV(B,C)080–14
CAP**4221A**	0.95	0.91	58MV(B,C)080–20
CAP**4224A**	0.95	0.91	58MV(B,C)080–20
CAP**4821A**	0.98	0.94	58MV(B,C)080–20
CAP**4824A**	0.98	0.94	58MV(B,C)080–20
CAP**6021A**	0.99	0.91	58MV(B,C)080–20
CAP**6024A**	0.99	0.91	58MV(B,C)080–20
CNPH*4221A**	0.95	0.91	58MV(B,C)080–20
CNPH*4321A**	0.99	0.91	58MV(B,C)080–20
CNPH*4821A**	0.98	0.94	58MV(B,C)080–20
CNPH*6024A**	1.00	1.00	58MV(B,C)080–20
CNPV*4221A**	0.95	0.91	58MV(B,C)080–20
CNPV*4324A**	0.99	0.91	58MV(B,C)080–20
CNPV*4821A**	0.98	0.90	58MV(B,C)080–20
CNPV*4824A**	0.98	0.90	58MV(B,C)080–20
CNPV*6024A**	0.99	0.91	58MV(B,C)080–20
CSPH*4212A**	0.98	0.94	58MV(B,C)080–20
CSPH*4812A**	0.98	0.94	58MV(B,C)080–20
CSPH*6012A**	0.99	0.91	58MV(B,C)080–20
CAP**4221A**	0.95	0.91	58MV(B,C)100–20

DETAILED COOLING CAPACITIES# (CONT.)

24ACC642A30 Outdoor Section With CNPV*4324A** Indoor Section**

COOLING INDOOR MODEL	CAPACITY	POWER	FURNACE MODEL
CAP**4224A**	0.95	0.91	58MV(B,C)100–20
CAP**4821A**	0.96	0.93	58MV(B,C)100–20
CAP**4824A**	0.96	0.89	58MV(B,C)100–20
CAP**6021A**	0.98	0.90	58MV(B,C)100–20
CAP**6024A**	0.98	0.90	58MV(B,C)100–20
CNPH*4221A**	0.95	0.91	58MV(B,C)100–20
CNPH*4321A**	0.98	0.90	58MV(B,C)100–20
CNPH*4821A**	0.96	0.89	58MV(B,C)100–20
CNPH*6024A**	0.98	0.90	58MV(B,C)100–20
CNPV*4221A**	0.95	0.91	58MV(B,C)100–20
CNPV*4324A**	0.98	0.90	58MV(B,C)100–20
CNPV*4821A**	0.96	0.89	58MV(B,C)100–20
CNPV*4824A**	0.96	0.89	58MV(B,C)100–20
CNPV*6024A**	0.98	0.90	58MV(B,C)100–20
CSPH*4212A**	0.98	0.90	58MV(B,C)100–20
CSPH*4812A**	0.98	0.90	58MV(B,C)100–20
CSPH*6012A**	0.99	0.91	58MV(B,C)100–20
CAP**4224A**	0.95	0.88	58MV(B,C)120–20
CAP**4824A**	0.98	0.90	58MV(B,C)120–20
CAP**6024A**	0.99	0.91	58MV(B,C)120–20
CNPH*4221A**	0.96	0.93	58MV(B,C)120–20
CNPH*4321A**	0.99	0.91	58MV(B,C)120–20
CNPH*4821A**	0.98	0.90	58MV(B,C)120–20
CNPH*6024A**	0.99	0.91	58MV(B,C)120–20
CNPV*4324A**	0.99	0.91	58MV(B,C)120–20
CNPV*4824A**	0.98	0.90	58MV(B,C)120–20
CNPV*6024A**	0.99	0.91	58MV(B,C)120–20
CSPH*4212A**	0.98	0.90	58MV(B,C)120–20
CSPH*4812A**	0.98	0.90	58MV(B,C)120–20
CSPH*6012A**	0.99	0.91	58MV(B,C)120–20
CAP**4224A**	0.95	0.91	58MVB040–14
CAP**4824A**	0.96	0.93	58MVB040–14
CAP**6024A**	0.98	0.90	58MVB040–14
CNPH*4221A**	0.95	0.91	58MVB040–14
CNPH*4321A**	0.98	0.94	58MVB040–14
CNPH*4821A**	0.96	0.93	58MVB040–14
CNPH*6024A**	0.98	0.90	58MVB040–14
CNPV*4324A**	0.98	0.90	58MVB040–14
CNPV*4824A**	0.96	0.93	58MVB040–14
CNPV*6024A**	0.98	0.90	58MVB040–14
CSPH*4212A**	0.98	0.94	58MVB040–14
CSPH*4812A**	0.98	0.94	58MVB040–14
CSPH*6012A**	0.99	0.91	58MVB040–14
CAP**4221A**	0.95	0.95	58PH*070–16
CAP**4817A**	0.98	0.98	58PH*070–16
CAP**4821A**	0.98	0.98	58PH*070–16
CAP**6021A**	0.99	0.95	58PH*070–16
CNPH*4221A**	0.95	0.95	58PH*070–16
CNPH*4321A**	0.99	0.95	58PH*070–16
CNPH*4821A**	0.98	0.98	58PH*070–16
CNPH*6024A**	1.00	1.00	58PH*070–16
CNPV*4217A**	0.96	0.96	58PH*070–16
CNPV*4221A**	0.95	0.95	58PH*070–16
CNPV*4821A**	0.98	0.98	58PH*070–16
CSPH*4212A**	0.98	0.98	58PH*070–16
CSPH*4812A**	0.98	0.94	58PH*070–16

COOLING INDOOR MODEL	CAPACITY	POWER	FURNACE MODEL
CSPH*6012A**	1.00	0.96	58PH*070–16
CAP**4221A**	0.96	0.89	58PH*090–16
CAP**4224A**	0.96	0.89	58PH*090–16
CAP**4821A**	0.98	0.90	58PH*090–16
CAP**4824A**	0.98	0.90	58PH*090–16
CAP**6021A**	0.99	0.91	58PH*090–16
CAP**6024A**	0.99	0.91	58PH*090–16
CNPH*4221A**	0.96	0.93	58PH*090–16
CNPH*4321A**	0.99	0.91	58PH*090–16
CNPH*4821A**	0.98	0.90	58PH*090–16
CNPH*6024A**	1.00	0.92	58PH*090–16
CNPV*4221A**	0.96	0.93	58PH*090–16
CNPV*4324A**	1.00	0.92	58PH*090–16
CNPV*4821A**	0.98	0.90	58PH*090–16
CNPV*4824A**	0.98	0.90	58PH*090–16
CNPV*6024A**	1.00	0.92	58PH*090–16
CSPH*4212A**	0.98	0.90	58PH*090–16
CSPH*4812A**	0.99	0.91	58PH*090–16
CSPH*6012A**	1.00	0.92	58PH*090–16
CAP**4221A**	0.96	0.89	58PH*110–20
CAP**4224A**	0.96	0.89	58PH*110–20
CAP**4821A**	0.98	0.90	58PH*110–20
CAP**4824A**	0.98	0.90	58PH*110–20
CAP**6021A**	1.00	0.92	58PH*110–20
CAP**6024A**	1.00	0.92	58PH*110–20
CNPH*4221A**	0.96	0.89	58PH*110–20
CNPH*4321A**	1.00	0.92	58PH*110–20
CNPH*4821A**	0.99	0.91	58PH*110–20
CNPH*6024A**	1.00	0.92	58PH*110–20
CNPV*4221A**	0.96	0.89	58PH*110–20
CNPV*4324A**	1.00	0.92	58PH*110–20
CNPV*4821A**	0.99	0.91	58PH*110–20
CNPV*4824A**	0.99	0.91	58PH*110–20
CNPV*6024A**	1.00	0.92	58PH*110–20
CSPH*4212A**	0.99	0.91	58PH*110–20
CSPH*4812A**	0.99	0.91	58PH*110–20
CSPH*6012A**	1.00	0.92	58PH*110–20
CAP**4224A**	0.96	0.89	58PH*135–20
CAP**4824A**	0.98	0.90	58PH*135–20
CAP**6024A**	1.00	0.92	58PH*135–20
CNPH*4221A**	0.96	0.93	58PH*135–20
CNPH*4321A**	0.99	0.91	58PH*135–20
CNPH*4821A**	0.99	0.91	58PH*135–20
CNPH*6024A**	1.00	0.92	58PH*135–20
CNPV*4324A**	1.00	0.92	58PH*135–20
CNPV*4824A**	0.99	0.91	58PH*135–20
CNPV*6024A**	1.00	0.92	58PH*135–20
CSPH*4212A**	0.98	0.90	58PH*135–20
CSPH*4812A**	0.99	0.91	58PH*135–20
CSPH*6012A**	1.00	0.92	58PH*135–20
CAP**4221A**	0.96	0.93	58UVB060–14
CAP**4221A**	0.96	0.93	58UVB060–14
CAP**4817A**	0.99	0.91	58UVB060–14
CAP**4817A**	0.99	0.91	58UVB060–14
CAP**4821A**	0.98	0.94	58UVB060–14
CAP**4821A**	0.98	0.94	58UVB060–14

COOLING INDOOR MODEL	CAPACITY	POWER	FURNACE MODEL
CAP**6021A**	0.99	0.91	58UVB060–14
CAP**6021A**	0.99	0.91	58UVB060–14
CNPV*4217A**	0.98	0.94	58UVB060–14
CNPV*4217A**	0.98	0.94	58UVB060–14
CNPV*4221A**	0.96	0.93	58UVB060–14
CNPV*4221A**	0.96	0.93	58UVB060–14
CNPV*4821A**	0.98	0.90	58UVB060–14
CNPV*4821A**	0.98	0.90	58UVB060–14
CAP**4221A**	0.95	0.91	58UVB080–14
CAP**4221A**	0.95	0.91	58UVB080–14
CAP**4224A**	0.95	0.91	58UVB080–14
CAP**4224A**	0.95	0.91	58UVB080–14
CAP**4821A**	0.96	0.93	58UVB080–14
CAP**4821A**	0.96	0.93	58UVB080–14
CAP**4824A**	0.96	0.93	58UVB080–14
CAP**4824A**	0.96	0.93	58UVB080–14
CAP**6021A**	0.99	0.95	58UVB080–14
CAP**6021A**	0.99	0.95	58UVB080–14
CAP**6024A**	0.99	0.91	58UVB080–14
CAP**6024A**	0.99	0.91	58UVB080–14
CNPV*4221A**	0.95	0.95	58UVB080–14
CNPV*4221A**	0.95	0.95	58UVB080–14
CNPV*4324A**	0.99	0.91	58UVB080–14
CNPV*4324A**	0.99	0.91	58UVB080–14
CNPV*4821A**	0.98	0.94	58UVB080–14
CNPV*4821A**	0.98	0.94	58UVB080–14
CNPV*4824A**	0.98	0.94	58UVB080–14
CNPV*4824A**	0.98	0.94	58UVB080–14
CNPV*6024A**	0.99	0.91	58UVB080–14
CNPV*6024A**	0.99	0.91	58UVB080–14
CAP**4221A**	0.95	0.91	58UVB080–20
CAP**4221A**	0.95	0.91	58UVB080–20
CAP**4224A**	0.95	0.91	58UVB080–20
CAP**4224A**	0.95	0.91	58UVB080–20
CAP**4821A**	0.98	0.94	58UVB080–20
CAP**4821A**	0.98	0.94	58UVB080–20
CAP**4824A**	0.98	0.94	58UVB080–20
CAP**4824A**	0.98	0.94	58UVB080–20
CAP**6021A**	0.99	0.91	58UVB080–20
CAP**6021A**	0.99	0.91	58UVB080–20
CAP**6024A**	0.99	0.91	58UVB080–20
CAP**6024A**	0.99	0.91	58UVB080–20
CNPV*4221A**	0.95	0.91	58UVB080–20
CNPV*4221A**	0.95	0.91	58UVB080–20
CNPV*4324A**	0.99	0.91	58UVB080–20
CNPV*4324A**	0.99	0.91	58UVB080–20
CNPV*4821A**	0.98	0.90	58UVB080–20
CNPV*4821A**	0.98	0.90	58UVB080–20
CNPV*4824A**	0.98	0.90	58UVB080–20
CNPV*4824A**	0.98	0.90	58UVB080–20
CNPV*6024A**	0.99	0.91	58UVB080–20
CNPV*6024A**	0.99	0.91	58UVB080–20
CAP**4221A**	0.95	0.91	58UVB100–20
CAP**4221A**	0.95	0.91	58UVB100–20
CAP**4224A**	0.95	0.91	58UVB100–20
CAP**4224A**	0.95	0.91	58UVB100–20

DETAILED COOLING CAPACITIES# (CONT.)

24ACC642A30 Outdoor Section With CNPV*4324A** Indoor Section**

COOLING INDOOR MODEL	CAPACITY	POWER	FURNACE MODEL
CAP**4821A**	0.96	0.93	58UVB100–20
CAP**4821A**	0.96	0.93	58UVB100–20
CAP**4824A**	0.96	0.89	58UVB100–20
CAP**4824A**	0.96	0.89	58UVB100–20
CAP**6021A**	0.98	0.90	58UVB100–20
CAP**6021A**	0.98	0.90	58UVB100–20
CAP**6024A**	0.98	0.90	58UVB100–20
CAP**6024A**	0.98	0.90	58UVB100–20
CNPV*4221A**	0.95	0.91	58UVB100–20
CNPV*4221A**	0.95	0.91	58UVB100–20
CNPV*4324A**	0.98	0.90	58UVB100–20
CNPV*4324A**	0.98	0.90	58UVB100–20
CNPV*4821A**	0.96	0.89	58UVB100–20
CNPV*4821A**	0.96	0.89	58UVB100–20
CNPV*4824A**	0.96	0.89	58UVB100–20
CNPV*4824A**	0.96	0.89	58UVB100–20
CNPV*6024A**	0.98	0.90	58UVB100–20
CNPV*6024A**	0.98	0.90	58UVB100–20
CAP**4224A**	0.95	0.88	58UVB120–20
CAP**4224A**	0.95	0.88	58UVB120–20
CAP**4824A**	0.98	0.90	58UVB120–20
CAP**4824A**	0.98	0.90	58UVB120–20
CAP**6024A**	0.99	0.91	58UVB120–20
CAP**6024A**	0.99	0.91	58UVB120–20
CNPV*4324A**	0.99	0.91	58UVB120–20
CNPV*4324A**	0.99	0.91	58UVB120–20
CNPV*4824A**	0.98	0.90	58UVB120–20
CNPV*4824A**	0.98	0.90	58UVB120–20
CNPV*6024A**	0.99	0.91	58UVB120–20
CNPV*6024A**	0.99	0.91	58UVB120–20
CAP**4221A**	0.95	0.88	58VLR120–20
CAP**4224A**	0.95	0.88	58VLR120–20
CAP**4821A**	0.96	0.89	58VLR120–20
CAP**4824A**	0.96	0.89	58VLR120–20
CAP**6021A**	0.99	0.91	58VLR120–20
CAP**6024A**	0.99	0.91	58VLR120–20
CNPH*4221A**	0.95	0.91	58VLR120–20
CNPH*4321A**	0.99	0.91	58VLR120–20
CNPH*4821A**	0.98	0.90	58VLR120–20
CNPH*6024A**	1.00	1.00	58VLR120–20
CNPV*4221A**	0.95	0.91	58VLR120–20
CNPV*4324A**	0.99	0.91	58VLR120–20
CNPV*4821A**	0.98	0.90	58VLR120–20
CNPV*4824A**	0.98	0.90	58VLR120–20
CNPV*6024A**	0.99	0.91	58VLR120–20
CSPH*4212A**	0.98	0.90	58VLR120–20
CSPH*4812A**	0.98	0.90	58VLR120–20
CSPH*6012A**	0.99	0.91	58VLR120–20
CAP**4221A**	0.95	0.91	58VMR120–20
CAP**4224A**	0.95	0.91	58VMR120–20
CAP**4821A**	0.96	0.89	58VMR120–20
CAP**4824A**	0.96	0.89	58VMR120–20
CAP**6021A**	0.98	0.90	58VMR120–20
CAP**6024A**	0.98	0.90	58VMR120–20
CNPH*4221A**	0.95	0.91	58VMR120–20
CNPH*4321A**	0.98	0.90	58VMR120–20

COOLING INDOOR MODEL	CAPACITY	POWER	FURNACE MODEL
CNPH*4821A**	0.96	0.89	58VMR120–20
CNPH*6024A**	0.99	0.91	58VMR120–20
CNPV*4221A**	0.95	0.91	58VMR120–20
CNPV*4324A**	0.99	0.91	58VMR120–20
CNPV*4821A**	0.96	0.89	58VMR120–20
CNPV*4824A**	0.96	0.89	58VMR120–20
CNPV*6024A**	0.99	0.91	58VMR120–20
CSPH*4212A**	0.98	0.90	58VMR120–20
CSPH*4812A**	0.98	0.90	58VMR120–20
CSPH*6012A**	0.99	0.91	58VMR120–20
CAP**4221A**	0.95	0.91	59*N*A060V17**14
CAP**4817A**	0.98	0.94	59*N*A060V17**14
CAP**4821A**	0.96	0.93	59*N*A060V17**14
CNPH*4221A**	0.95	0.95	59*N*A060V17**14
CNPH*4321A**	0.99	0.95	59*N*A060V17**14
CNPH*4821A**	0.98	0.94	59*N*A060V17**14
CNPV*4217A**	0.96	0.93	59*N*A060V17**14
CNPV*4221A**	0.95	0.95	59*N*A060V17**14
CNPV*4821A**	0.98	0.94	59*N*A060V17**14
CSPH*4212A**	0.98	0.94	59*N*A060V17**14
CSPH*4812A**	0.98	0.94	59*N*A060V17**14
CAP**4221A**	0.95	0.91	59*N*A080V17**14
CAP**4817A**	0.98	0.94	59*N*A080V17**14
CAP**4821A**	0.98	0.94	59*N*A080V17**14
CNPH*4221A**	0.96	0.93	59*N*A080V17**14
CNPH*4321A**	0.99	0.93	59*N*A080V17**14
CNPH*4821A**	0.98	0.92	59*N*A080V17**14
CNPV*4217A**	0.96	0.93	59*N*A080V17**14
CNPV*4221A**	0.96	0.93	59*N*A080V17**14
CNPV*4821A**	0.98	0.92	59*N*A080V17**14
CSPH*4212A**	0.98	0.92	59*N*A080V17**14
CSPH*4812A**	0.98	0.92	59*N*A080V17**14
CAP**4221A**	0.96	0.93	59*N*A100V21**20
CAP**4224A**	0.96	0.91	59*N*A100V21**20
CAP**4821A**	0.98	0.92	59*N*A100V21**20
CAP**4823A**	0.98	0.92	59*N*A100V21**20
CAP**4824A**	0.98	0.92	59*N*A100V21**20
CNPH*4221A**	0.96	0.93	59*N*A100V21**20
CNPH*4321A**	0.99	0.93	59*N*A100V21**20
CNPH*4821A**	0.98	0.92	59*N*A100V21**20
CNPV*4221A**	0.96	0.93	59*N*A100V21**20
CNPV*4324A**	0.99	0.91	59*N*A100V21**20
CNPV*4821A**	0.98	0.92	59*N*A100V21**20
CNPV*4824A**	0.98	0.92	59*N*A100V21**20
CSPH*4212A**	0.98	0.92	59*N*A100V21**20
CSPH*4812A**	0.99	0.93	59*N*A100V21**20
CAP**4224A**	0.96	0.91	59*N*A120V24**22
CAP**4823A**	0.98	0.92	59*N*A120V24**22
CAP**4824A**	0.98	0.92	59*N*A120V24**22
CNPH*4221A**	0.96	0.91	59*N*A120V24**22
CNPH*4321A**	0.99	0.91	59*N*A120V24**22
CNPH*4821A**	0.98	0.90	59*N*A120V24**22
CNPV*4324A**	0.99	0.91	59*N*A120V24**22
CNPV*4824A**	0.98	0.90	59*N*A120V24**22
CSPH*4212A**	0.99	0.93	59*N*A120V24**22
CSPH*4812A**	0.99	0.91	59*N*A120V24**22

COOLING INDOOR MODEL	CAPACITY	POWER	FURNACE MODEL
CAP**4221A**	0.96	0.96	59*P5A060E17**14
CAP**4817A**	0.99	0.95	59*P5A060E17**14
CAP**4821A**	0.98	0.94	59*P5A060E17**14
CNPH*4221A**	0.96	0.96	59*P5A060E17**14
CNPH*4321A**	1.00	0.96	59*P5A060E17**14
CNPH*4821A**	0.99	0.95	59*P5A060E17**14
CNPV*4217A**	0.98	0.94	59*P5A060E17**14
CNPV*4221A**	0.96	0.96	59*P5A060E17**14
CNPV*4821A**	0.99	0.95	59*P5A060E17**14
CSPH*4212A**	0.99	0.95	59*P5A060E17**14
CSPH*4812A**	0.99	0.95	59*P5A060E17**14
CAP**4221A**	0.96	0.93	59*P5A080E17**16
CAP**4817A**	0.99	0.95	59*P5A080E17**16
CAP**4821A**	0.99	0.95	59*P5A080E17**16
CNPH*4221A**	0.96	0.93	59*P5A080E17**16
CNPH*4321A**	1.00	0.94	59*P5A080E17**16
CNPH*4821A**	0.99	0.95	59*P5A080E17**16
CNPV*4217A**	0.98	0.94	59*P5A080E17**16
CNPV*4221A**	0.96	0.93	59*P5A080E17**16
CNPV*4821A**	0.99	0.95	59*P5A080E17**16
CSPH*4212A**	0.99	0.95	59*P5A080E17**16
CSPH*4812A**	0.99	0.95	59*P5A080E17**16
CAP**4221A**	0.96	0.93	59*P5A100E21**16
CAP**4224A**	0.96	0.93	59*P5A100E21**16
CAP**4821A**	0.98	0.92	59*P5A100E21**16
CAP**4823A**	0.98	0.92	59*P5A100E21**16
CAP**4824A**	0.98	0.92	59*P5A100E21**16
CNPH*4221A**	0.96	0.93	59*P5A100E21**16
CNPH*4321A**	1.00	0.94	59*P5A100E21**16
CNPH*4821A**	0.99	0.93	59*P5A100E21**16
CNPV*4221A**	0.96	0.93	59*P5A100E21**16
CNPV*4324A**	1.00	0.94	59*P5A100E21**16
CNPV*4821A**	0.99	0.93	59*P5A100E21**16
CNPV*4824A**	0.99	0.93	59*P5A100E21**16
CSPH*4212A**	0.99	0.93	59*P5A100E21**16
CSPH*4812A**	0.99	0.93	59*P5A100E21**16
CAP**4224A**	0.98	0.92	59*P5A120E24**22
CAP**4823A**	0.99	0.93	59*P5A120E24**22
CAP**4824A**	0.99	0.93	59*P5A120E24**22
CNPH*4221A**	0.98	0.92	59*P5A120E24**22
CNPH*4321A**	1.01	0.93	59*P5A120E24**22
CNPH*4821A**	1.00	0.94	59*P5A120E24**22
CNPV*4324A**	1.01	0.93	59*P5A120E24**22
CNPV*4824A**	1.00	0.94	59*P5A120E24**22
CSPH*4212A**	1.00	0.94	59*P5A120E24**22
CSPH*4812A**	1.00	0.94	59*P5A120E24**22
CAP**4221A**	0.96	0.93	OVLAAB048112
CAP**4224A**	0.98	0.94	OVLAAB048112
CAP**4821A**	0.99	0.95	OVLAAB048112
CAP**4823A**	0.99	0.95	OVLAAB048112
CAP**4824A**	0.99	0.95	OVLAAB048112
CNPH*4221A**	0.98	0.98	OVLAAB048112
CNPH*4321A**	1.00	0.96	OVLAAB048112
CNPH*4821A**	0.99	0.95	OVLAAB048112
CNPV*4221A**	0.98	0.98	OVLAAB048112
CNPV*4324A**	1.00	0.96	OVLAAB048112

DETAILED COOLING CAPACITIES# (CONT.)

24ACC642A30 Outdoor Section With CNPV*4324A** Indoor Section**

COOLING INDOOR MODEL	CAPACITY	POWER	FURNACE MODEL
CNPV*4821A**	0.99	0.95	OVLAAB048112
CNPV*4824A**	0.99	0.95	OVLAAB048112
CSPH*4212A**	0.99	0.95	OVLAAB048112
CSPH*4812A**	1.00	0.96	OVLAAB048112
CAP**4224A**	0.99	0.95	OVLAAB060154
CAP**4824A**	1.00	0.92	OVLAAB060154
CNPH*4221A**	0.99	0.95	OVLAAB060154
CNPH*4321A**	1.01	0.93	OVLAAB060154
CNPH*4821A**	1.01	0.93	OVLAAB060154
CNPV*4324A**	1.01	0.93	OVLAAB060154
CNPV*4824A**	1.01	0.93	OVLAAB060154
CSPH*4212A**	1.01	0.93	OVLAAB060154
CSPH*4812A**	1.01	0.93	OVLAAB060154
CAP**4221A**	0.96	0.93	OVMAAB042112
CAP**4817A**	0.99	0.95	OVMAAB042112
CAP**4821A**	0.98	0.94	OVMAAB042112
CNPH*4221A**	0.96	0.93	OVMAAB042112
CNPH*4321A**	1.00	0.92	OVMAAB042112
CNPH*4821A**	0.99	0.95	OVMAAB042112
CNPV*4217A**	0.98	0.94	OVMAAB042112
CNPV*4221A**	0.96	0.93	OVMAAB042112
CNPV*4821A**	0.99	0.95	OVMAAB042112
CSPH*4212A**	0.99	0.95	OVMAAB042112
CSPH*4812A**	0.99	0.95	OVMAAB042112

See notes on pg. 69

DETAILED COOLING CAPACITIES# (CONT.)

EVAPORATOR AIR		CONDENSER ENTERING AIR TEMPERATURES °F (°C)																	
		75 (23.9)			85 (29.4)			95 (35)			105 (40.6)			115 (46.1)			125 (51.7)		
CFM	EWB °F (°C)	Capacity MBtuh		Total System KW**	Capacity MBtuh		Total System KW**	Capacity MBtuh		Total System KW**	Capacity MBtuh		Total System KW**	Capacity MBtuh		Total System KW**	Capacity MBtuh		Total System KW**
		Total	Sens‡		Total	Sens‡		Total	Sens‡		Total	Sens‡		Total	Sens‡		Total	Sens‡	
24ACC648A**30 Outdoor Section With CNPV*6124A** Indoor Section																			
1400	57 (13.9)	56.17	28.26	2.67	53.35	27.27	3.12	50.45	26.26	3.57	47.46	25.24	4.03	44.32	24.18	4.51	41.00	23.07	5.02
	62 (16.7)	50.88	34.78	2.84	48.38	33.81	3.25	45.79	32.82	3.66	43.11	31.80	4.09	40.30	30.75	4.55	37.32	29.64	5.04
	63 (17.2)††	47.10	33.38	2.95	44.81	32.43	3.33	42.44	31.45	3.72	39.99	30.45	4.13	37.39	29.40	4.57	34.65	28.30	5.05
	67 (19.4)	46.38	41.24	2.96	44.21	40.25	3.34	42.02	41.83	3.72	40.01	40.01	4.12	37.89	37.89	4.56	35.59	35.59	5.05
	72 (22.2)	45.57	45.57	2.98	43.79	43.79	3.35	41.92	41.92	3.72	39.95	39.95	4.13	37.83	37.83	4.56	35.54	35.54	5.05
1600	57 (13.9)	57.16	29.78	2.70	54.20	28.77	3.16	51.18	27.74	3.62	48.04	26.69	4.09	44.79	25.61	4.58	41.35	24.49	5.10
	62 (16.7)	51.83	37.21	2.88	49.20	36.22	3.30	46.50	35.20	3.72	43.71	34.16	4.16	40.79	33.07	4.62	37.73	31.93	5.12
	63 (17.2)††	48.01	35.64	2.99	45.60	34.66	3.39	43.14	33.66	3.78	40.57	32.63	4.20	37.89	31.55	4.64	35.07	30.41	5.13
	67 (19.4)	47.62	47.39	3.00	45.65	45.65	3.38	43.62	43.62	3.77	41.49	41.49	4.18	39.20	39.20	4.63	36.74	36.74	5.12
	72 (22.2)	47.51	47.51	3.00	45.58	45.58	3.38	43.56	43.56	3.77	41.43	41.43	4.18	39.15	39.15	4.63	36.69	36.69	5.12
1800	57 (13.9)	57.88	31.22	2.74	54.82	30.20	3.21	51.68	29.15	3.68	48.44	28.08	4.15	45.10	26.99	4.64	41.56	25.85	5.17
	62 (16.7)	52.53	39.54	2.92	49.82	38.53	3.35	47.03	37.48	3.78	44.15	36.41	4.22	41.17	35.29	4.69	38.05	34.08	5.19
	63 (17.2)††	48.69	37.80	3.04	46.20	36.80	3.44	43.65	35.77	3.85	41.02	34.70	4.27	38.28	33.58	4.71	35.42	32.36	5.20
	67 (19.4)	49.20	49.20	3.02	47.12	47.12	3.42	44.96	44.96	3.82	42.68	42.68	4.24	40.26	40.26	4.70	37.65	37.65	5.19
	72 (22.2)	49.13	49.13	3.03	47.06	47.06	3.42	44.90	44.90	3.82	42.63	42.63	4.24	40.21	40.21	4.70	37.61	37.61	5.19

COOLING INDOOR MODEL	CAPACITY	POWER	FURNACE MODEL
*CNPV*6124A**	1.00	1.00	
CAP**4817A**	0.96	1.00	
CAP**4821A**	0.97	1.01	
CAP**4823A**	0.97	1.01	
CAP**4824A**	0.97	1.01	
CAP**6021A**	0.98	0.98	
CAP**6024A**	0.98	0.98	
CAP**6025A**	0.98	0.98	
CNPF*4818A**	0.95	0.99	
CNPH*4821A**	0.97	1.01	
CNPH*6024A**	0.98	0.98	
CNPH*6124A**	0.99	0.99	
CNPV*4821A**	0.97	1.01	
CNPV*4824A**	0.97	1.01	
CNPV*6024A**	0.98	0.98	
CSPH*4812A**	0.98	1.02	
CSPH*6012A**	0.99	0.99	
FB4CNF048	0.96	1.00	
FB4CNF048	0.96	1.00	
FB4CNF060	0.99	0.95	
FE4AN(B,F)005	0.98	0.94	
FE4ANB006	0.99	0.95	
FV4BN(B,F)005	0.97	0.92	
FV4BNB006	0.99	0.90	
FV4CN(B,F)005	0.98	0.94	
FV4CNB006	0.99	0.95	
FX4CN(B,F)048	0.98	0.96	
FX4CN(B,F)060	1.00	0.95	
FX4DN(B,F)049	0.99	0.95	
FX4DN(B,F)061	1.00	0.96	
FY4ANB060	0.98	1.00	
FY4ANF048	0.97	1.01	
FY5BNB060	0.99	1.03	
FY5BNF048	0.98	0.98	
FY5BNF048	0.98	0.98	

COOLING INDOOR MODEL	CAPACITY	POWER	FURNACE MODEL
CAP**4817A**	0.96	0.96	58CV(A,X)090–16
CAP**4821A**	0.95	0.95	58CV(A,X)090–16
CAP**6021A**	0.97	0.93	58CV(A,X)090–16
CNPH*4821A**	0.96	0.96	58CV(A,X)090–16
CNPH*6024A**	0.97	0.93	58CV(A,X)090–16
CNPH*6124A**	0.98	0.94	58CV(A,X)090–16
CNPV*4821A**	0.96	0.96	58CV(A,X)090–16
CSPH*4812A**	0.97	0.97	58CV(A,X)090–16
CSPH*6012A**	0.98	0.94	58CV(A,X)090–16
CAP**4821A**	0.96	0.96	58CV(A,X)110–20
CAP**4824A**	0.96	0.96	58CV(A,X)110–20
CAP**6021A**	0.97	0.93	58CV(A,X)110–20
CAP**6024A**	0.97	0.93	58CV(A,X)110–20
CNPH*4821A**	0.96	0.96	58CV(A,X)110–20
CNPH*6024A**	0.97	0.93	58CV(A,X)110–20
CNPH*6124A**	0.98	0.94	58CV(A,X)110–20
CNPV*4821A**	0.96	0.96	58CV(A,X)110–20
CNPV*4824A**	0.96	0.96	58CV(A,X)110–20
CNPV*6024A**	0.97	0.93	58CV(A,X)110–20
CNPV*6124A**	0.99	0.95	58CV(A,X)110–20
CSPH*4812A**	0.97	0.97	58CV(A,X)110–20
CSPH*6012A**	0.98	0.94	58CV(A,X)110–20
CAP**4824A**	0.96	0.92	58CV(A,X)135–22
CAP**6024A**	0.98	0.94	58CV(A,X)135–22
CNPH*4821A**	0.96	0.92	58CV(A,X)135–22
CNPH*6024A**	0.98	0.94	58CV(A,X)135–22
CNPH*6124A**	0.98	0.94	58CV(A,X)135–22
CNPV*4824A**	0.96	0.92	58CV(A,X)135–22
CNPV*6024A**	0.98	0.94	58CV(A,X)135–22
CNPV*6124A**	0.99	0.95	58CV(A,X)135–22
CSPH*4812A**	0.97	0.93	58CV(A,X)135–22
CSPH*6012A**	0.98	0.94	58CV(A,X)135–22
CAP**4824A**	0.96	0.92	58CV(A,X)155–22
CAP**6024A**	0.98	0.94	58CV(A,X)155–22
CNPH*4821A**	0.96	0.92	58CV(A,X)155–22

COOLING INDOOR MODEL	CAPACITY	POWER	FURNACE MODEL
CNPH*6024A**	0.98	0.94	58CV(A,X)155–22
CNPH*6124A**	0.98	0.94	58CV(A,X)155–22
CNPV*4824A**	0.96	0.92	58CV(A,X)155–22
CNPV*6024A**	0.98	0.94	58CV(A,X)155–22
CNPV*6124A**	0.99	0.95	58CV(A,X)155–22
CSPH*4812A**	0.97	0.93	58CV(A,X)155–22
CSPH*6012A**	0.98	0.94	58CV(A,X)155–22
CAP**4823A**	0.96	0.96	58HDV080––20
CAP**6025A**	0.98	0.98	58HDV080––20
CNPH*4821A**	0.96	0.96	58HDV080––20
CNPH*6024A**	0.98	0.98	58HDV080––20
CNPH*6124A**	0.98	0.98	58HDV080––20
CNPV*4821A**	0.96	0.96	58HDV080––20
CNPV*4824A**	0.96	0.96	58HDV080––20
CNPV*6024A**	0.98	0.98	58HDV080––20
CNPV*6124A**	0.99	0.95	58HDV080––20
CSPH*4812A**	0.97	0.97	58HDV080––20
CSPH*6012A**	0.99	0.95	58HDV080––20
CAP**6025A**	0.98	0.94	58HDV100––20
CNPH*4821A**	0.96	0.96	58HDV100––20
CNPH*6024A**	0.97	0.93	58HDV100––20
CNPH*6124A**	0.98	0.94	58HDV100––20
CNPV*4824A**	0.96	0.96	58HDV100––20
CNPV*6024A**	0.97	0.93	58HDV100––20
CNPV*6124A**	0.99	0.95	58HDV100––20
CSPH*4812A**	0.97	0.97	58HDV100––20
CSPH*6012A**	0.98	0.94	58HDV100––20
CAP**4817A**	0.97	0.97	58ME(B,C)080–16
CAP**4821A**	0.96	0.96	58ME(B,C)080–16
CAP**6021A**	0.98	0.98	58ME(B,C)080–16
CNPH*4821A**	0.96	0.96	58ME(B,C)080–16
CNPH*6024A**	0.98	0.98	58ME(B,C)080–16
CNPH*6124A**	0.98	0.94	58ME(B,C)080–16
CNPV*4821A**	0.96	0.96	58ME(B,C)080–16
CSPH*4812A**	0.97	0.97	58ME(B,C)080–16

DETAILED COOLING CAPACITIES# (CONT.)

24ACC648A30 Outdoor Section With CNPV*6124A** Indoor Section**

COOLING INDOOR MODEL	CAPACITY	POWER	FURNACE MODEL
CSPH*6012A**	0.98	0.94	58ME(B,C)080–16
CAP**4821A**	0.96	0.96	58ME(B,C)100–20
CAP**4824A**	0.96	0.92	58ME(B,C)100–20
CAP**6021A**	0.98	0.94	58ME(B,C)100–20
CAP**6024A**	0.98	0.94	58ME(B,C)100–20
CNPH*4821A**	0.97	0.93	58ME(B,C)100–20
CNPH*6024A**	0.96	0.92	58ME(B,C)100–20
CNPH*6124A**	0.98	0.94	58ME(B,C)100–20
CNPV*4821A**	0.97	0.93	58ME(B,C)100–20
CNPV*4824A**	0.97	0.93	58ME(B,C)100–20
CNPV*6024A**	0.98	0.94	58ME(B,C)100–20
CNPV*6124A**	0.99	0.95	58ME(B,C)100–20
CSPH*4812A**	0.97	0.93	58ME(B,C)100–20
CSPH*6012A**	0.99	0.95	58ME(B,C)100–20
CAP**4824A**	0.97	0.93	58ME(B,C)120–20
CAP**6024A**	0.98	0.94	58ME(B,C)120–20
CNPH*4821A**	0.97	0.93	58ME(B,C)120–20
CNPH*6024A**	0.98	0.94	58ME(B,C)120–20
CNPH*6124A**	0.99	0.95	58ME(B,C)120–20
CNPV*4824A**	0.97	0.93	58ME(B,C)120–20
CNPV*6024A**	0.98	0.94	58ME(B,C)120–20
CNPV*6124A**	1.00	0.96	58ME(B,C)120–20
CSPH*4812A**	0.97	0.93	58ME(B,C)120–20
CSPH*6012A**	0.99	0.95	58ME(B,C)120–20
CAP**4821A**	0.95	0.95	58MV(B,C)080–20
CAP**4824A**	0.95	0.95	58MV(B,C)080–20
CAP**6021A**	0.97	0.97	58MV(B,C)080–20
CAP**6024A**	0.97	0.97	58MV(B,C)080–20
CNPH*4821A**	0.95	0.95	58MV(B,C)080–20
CNPH*6024A**	0.97	0.93	58MV(B,C)080–20
CNPH*6124A**	0.97	0.97	58MV(B,C)080–20
CNPV*4821A**	0.95	0.95	58MV(B,C)080–20
CNPV*4824A**	0.95	0.95	58MV(B,C)080–20
CNPV*6024A**	0.97	0.93	58MV(B,C)080–20
CNPV*6124A**	0.98	0.94	58MV(B,C)080–20
CSPH*4812A**	0.96	0.96	58MV(B,C)080–20
CSPH*6012A**	0.97	0.93	58MV(B,C)080–20
CAP**4821A**	0.96	0.96	58MV(B,C)100–20
CAP**4824A**	0.96	0.96	58MV(B,C)100–20
CAP**6021A**	0.97	0.97	58MV(B,C)100–20
CAP**6024A**	0.97	0.97	58MV(B,C)100–20
CNPH*4821A**	0.96	0.96	58MV(B,C)100–20
CNPH*6024A**	0.97	0.97	58MV(B,C)100–20
CNPH*6124A**	0.98	0.98	58MV(B,C)100–20
CNPV*4821A**	0.96	0.96	58MV(B,C)100–20
CNPV*4824A**	0.96	0.96	58MV(B,C)100–20
CNPV*6024A**	0.97	0.97	58MV(B,C)100–20
CNPV*6124A**	0.99	0.95	58MV(B,C)100–20
CSPH*4812A**	0.97	0.97	58MV(B,C)100–20
CSPH*6012A**	0.98	0.94	58MV(B,C)100–20
CAP**4824A**	0.96	0.96	58MV(B,C)120–20
CAP**6024A**	0.97	0.93	58MV(B,C)120–20
CNPH*4821A**	0.96	0.96	58MV(B,C)120–20
CNPH*6024A**	0.97	0.93	58MV(B,C)120–20
CNPH*6124A**	0.98	0.94	58MV(B,C)120–20
CNPV*4824A**	0.96	0.96	58MV(B,C)120–20

COOLING INDOOR MODEL	CAPACITY	POWER	FURNACE MODEL
CNPV*6024A**	0.97	0.93	58MV(B,C)120–20
CNPV*6124A**	0.99	0.95	58MV(B,C)120–20
CSPH*4812A**	0.97	0.97	58MV(B,C)120–20
CSPH*6012A**	0.98	0.94	58MV(B,C)120–20
CAP**4821A**	0.96	0.96	58PH*090–16
CAP**4824A**	0.96	0.96	58PH*090–16
CAP**6021A**	0.98	0.94	58PH*090–16
CAP**6024A**	0.98	0.94	58PH*090–16
CNPH*4821A**	0.96	0.96	58PH*090–16
CNPH*6024A**	0.98	0.94	58PH*090–16
CNPH*6124A**	0.98	0.94	58PH*090–16
CNPV*4821A**	0.96	0.96	58PH*090–16
CNPV*4824A**	0.96	0.96	58PH*090–16
CNPV*6024A**	0.98	0.94	58PH*090–16
CNPV*6124A**	0.99	0.95	58PH*090–16
CSPH*4812A**	0.97	0.93	58PH*090–16
CSPH*6012A**	0.98	0.94	58PH*090–16
CAP**4821A**	0.96	0.92	58PH*110–20
CAP**4824A**	0.96	0.92	58PH*110–20
CAP**6021A**	0.98	0.94	58PH*110–20
CAP**6024A**	0.98	0.94	58PH*110–20
CNPH*4821A**	0.96	0.92	58PH*110–20
CNPH*6024A**	0.98	0.94	58PH*110–20
CNPH*6124A**	0.98	0.94	58PH*110–20
CNPV*4821A**	0.96	0.92	58PH*110–20
CNPV*4824A**	0.96	0.92	58PH*110–20
CNPV*6024A**	0.98	0.94	58PH*110–20
CNPV*6124A**	0.99	0.95	58PH*110–20
CSPH*4812A**	0.97	0.93	58PH*110–20
CSPH*6012A**	0.99	0.95	58PH*110–20
CAP**4824A**	0.96	0.96	58PH*135–20
CAP**6024A**	0.98	0.94	58PH*135–20
CNPH*4821A**	0.96	0.92	58PH*135–20
CNPH*6024A**	0.98	0.94	58PH*135–20
CNPH*6124A**	0.98	0.94	58PH*135–20
CNPV*4824A**	0.96	0.92	58PH*135–20
CNPV*6024A**	0.98	0.94	58PH*135–20
CNPV*6124A**	0.99	0.95	58PH*135–20
CSPH*4812A**	0.97	0.93	58PH*135–20
CSPH*6012A**	0.99	0.95	58PH*135–20
CAP**4821A**	0.95	0.95	58UVB080–20
CAP**4821A**	0.95	0.95	58UVB080–20
CAP**4824A**	0.95	0.95	58UVB080–20
CAP**4824A**	0.95	0.95	58UVB080–20
CAP**6021A**	0.97	0.97	58UVB080–20
CAP**6021A**	0.97	0.97	58UVB080–20
CAP**6024A**	0.97	0.97	58UVB080–20
CAP**6024A**	0.97	0.97	58UVB080–20
CNPV*4821A**	0.95	0.95	58UVB080–20
CNPV*4821A**	0.95	0.95	58UVB080–20
CNPV*4824A**	0.95	0.95	58UVB080–20
CNPV*4824A**	0.95	0.95	58UVB080–20
CNPV*6024A**	0.97	0.93	58UVB080–20
CNPV*6024A**	0.97	0.93	58UVB080–20
CNPV*6124A**	0.98	0.94	58UVB080–20
CNPV*6124A**	0.98	0.94	58UVB080–20

COOLING INDOOR MODEL	CAPACITY	POWER	FURNACE MODEL
CAP**4821A**	0.96	0.96	58UVB100–20
CAP**4821A**	0.96	0.96	58UVB100–20
CAP**4824A**	0.96	0.96	58UVB100–20
CAP**4824A**	0.96	0.96	58UVB100–20
CAP**6021A**	0.97	0.97	58UVB100–20
CAP**6021A**	0.97	0.97	58UVB100–20
CAP**6024A**	0.97	0.97	58UVB100–20
CAP**6024A**	0.97	0.97	58UVB100–20
CNPV*4821A**	0.96	0.96	58UVB100–20
CNPV*4821A**	0.96	0.96	58UVB100–20
CNPV*4824A**	0.96	0.96	58UVB100–20
CNPV*4824A**	0.96	0.96	58UVB100–20
CNPV*6024A**	0.97	0.97	58UVB100–20
CNPV*6024A**	0.97	0.97	58UVB100–20
CNPV*6124A**	0.99	0.95	58UVB100–20
CNPV*6124A**	0.99	0.95	58UVB100–20
CAP**4824A**	0.96	0.96	58UVB120–20
CAP**4824A**	0.96	0.96	58UVB120–20
CAP**6024A**	0.97	0.93	58UVB120–20
CAP**6024A**	0.97	0.93	58UVB120–20
CNPV*4824A**	0.96	0.96	58UVB120–20
CNPV*4824A**	0.96	0.96	58UVB120–20
CNPV*6024A**	0.97	0.93	58UVB120–20
CNPV*6024A**	0.97	0.93	58UVB120–20
CNPV*6124A**	0.98	0.94	58UVB120–20
CNPV*6124A**	0.98	0.94	58UVB120–20
CAP**4821A**	0.95	0.95	58VLR120–20
CAP**4824A**	0.95	0.95	58VLR120–20
CAP**6021A**	0.97	0.93	58VLR120–20
CAP**6024A**	0.97	0.93	58VLR120–20
CNPH*4821A**	0.96	0.96	58VLR120–20
CNPH*6024A**	0.97	0.93	58VLR120–20
CNPH*6124A**	0.97	0.93	58VLR120–20
CNPV*4821A**	0.96	0.96	58VLR120–20
CNPV*4824A**	0.96	0.96	58VLR120–20
CNPV*6024A**	0.97	0.93	58VLR120–20
CNPV*6124A**	0.98	0.94	58VLR120–20
CSPH*4812A**	0.96	0.96	58VLR120–20
CSPH*6012A**	0.97	0.93	58VLR120–20
OBCD5AA048	0.92	0.95	58VLR120–20
CAP**4821A**	0.95	0.99	58VMR120–20
CAP**4824A**	0.95	0.95	58VMR120–20
CAP**6021A**	0.97	0.97	58VMR120–20
CAP**6024A**	0.97	0.97	58VMR120–20
CNPH*4821A**	0.95	0.95	58VMR120–20
CNPH*6024A**	0.97	0.97	58VMR120–20
CNPH*6124A**	0.97	0.97	58VMR120–20
CNPV*4821A**	0.95	0.95	58VMR120–20
CNPV*4824A**	0.95	0.95	58VMR120–20
CNPV*6024A**	0.97	0.97	58VMR120–20
CNPV*6124A**	0.98	0.94	58VMR120–20
CSPH*4812A**	0.96	0.96	58VMR120–20
CSPH*6012A**	0.97	0.93	58VMR120–20
OBCD5AA048	0.92	0.95	58VMR120–20
CAP**4821A**	0.90	0.94	59*N*A100V21**20
CAP**4823A**	0.90	0.94	59*N*A100V21**20

DETAILED COOLING CAPACITIES# (CONT.)

24ACC648A30 Outdoor Section With CNPV*6124A** Indoor Section**

COOLING INDOOR MODEL	CAPACITY	POWER	FURNACE MODEL
CAP**4824A**	0.90	0.94	59*N*A100V21**20
CAP**6021A**	0.96	0.96	59*N*A100V21**20
CAP**6024A**	0.96	0.96	59*N*A100V21**20
CAP**6025A**	0.96	0.96	59*N*A100V21**20
CNPH*4821A**	0.90	0.90	59*N*A100V21**20
CNPH*6024A**	0.96	0.96	59*N*A100V21**20
CNPH*6124A**	0.97	0.97	59*N*A100V21**20
CNPV*4821A**	0.90	0.90	59*N*A100V21**20
CNPV*4824A**	0.90	0.90	59*N*A100V21**20
CNPV*6024A**	0.96	0.96	59*N*A100V21**20
CNPV*6124A**	0.97	0.95	59*N*A100V21**20
CSPH*4812A**	0.96	0.96	59*N*A100V21**20
CSPH*6012A**	0.97	0.95	59*N*A100V21**20
CAP**4823A**	0.90	0.90	59*N*A120V24**22
CAP**4824A**	0.90	0.90	59*N*A120V24**22
CAP**6024A**	0.96	0.94	59*N*A120V24**22
CAP**6025A**	0.96	0.94	59*N*A120V24**22
CNPH*4821A**	0.90	0.90	59*N*A120V24**22
CNPH*6024A**	0.96	0.94	59*N*A120V24**22
CNPH*6124A**	0.97	0.95	59*N*A120V24**22
CNPV*4824A**	0.90	0.90	59*N*A120V24**22
CNPV*6024A**	0.96	0.94	59*N*A120V24**22
CNPV*6124A**	0.97	0.93	59*N*A120V24**22
CSPH*4812A**	0.96	0.96	59*N*A120V24**22
CSPH*6012A**	0.97	0.95	59*N*A120V24**22
CNPH*4821A**	0.90	0.94	59*P5A080E17**16
CNPH*6024A**	0.96	1.00	59*P5A080E17**16
CNPV*4821A**	0.90	0.94	59*P5A080E17**16
CSPH*6012A**	0.97	0.97	59*P5A080E17**16
CAP**4821A**	0.90	0.94	59*P5A100E21**16
CAP**4823A**	0.90	0.94	59*P5A100E21**16
CAP**4824A**	0.90	0.94	59*P5A100E21**16
CAP**6021A**	0.97	0.97	59*P5A100E21**16
CAP**6024A**	0.97	0.97	59*P5A100E21**16
CAP**6025A**	0.97	0.97	59*P5A100E21**16
CNPH*4821A**	0.90	0.94	59*P5A100E21**16
CNPH*6024A**	0.97	0.97	59*P5A100E21**16
CNPH*6124A**	0.97	0.97	59*P5A100E21**16
CNPV*4821A**	0.90	0.94	59*P5A100E21**16
CNPV*4824A**	0.90	0.94	59*P5A100E21**16
CNPV*6024A**	0.97	0.97	59*P5A100E21**16
CNPV*6124A**	0.98	0.96	59*P5A100E21**16
CSPH*4812A**	0.96	0.96	59*P5A100E21**16
CSPH*6012A**	0.97	0.97	59*P5A100E21**16
CAP**4823A**	0.90	0.90	59*P5A120E24**22
CAP**4824A**	0.96	0.96	59*P5A120E24**22
CAP**6024A**	0.97	0.95	59*P5A120E24**22
CAP**6025A**	0.97	0.95	59*P5A120E24**22
CNPH*4821A**	0.96	0.96	59*P5A120E24**22
CNPH*6024A**	0.97	0.95	59*P5A120E24**22
CNPH*6124A**	0.98	0.96	59*P5A120E24**22
CNPV*4824A**	0.96	0.96	59*P5A120E24**22
CNPV*6024A**	0.97	0.95	59*P5A120E24**22
CNPV*6124A**	0.99	0.95	59*P5A120E24**22
CSPH*4812A**	0.96	0.96	59*P5A120E24**22
CSPH*6012A**	0.98	0.96	59*P5A120E24**22

COOLING INDOOR MODEL	CAPACITY	POWER	FURNACE MODEL
CSPH*6012A**	0.97	0.97	OVLAAB048112
CNPH*4821A**	0.97	0.97	OVLAAB060154
CNPH*6024A**	0.99	0.95	OVLAAB060154
CNPH*6124A**	0.99	0.95	OVLAAB060154
CSPH*4812A**	0.98	0.98	OVLAAB060154
CSPH*6012A**	0.99	0.95	OVLAAB060154

See notes on pg. 69

DETAILED COOLING CAPACITIES# (CONT.)

EVAPORATOR AIR		CONDENSER ENTERING AIR TEMPERATURES °F (°C)																	
		75 (23.9)			85 (29.4)			95 (35)			105 (40.6)			115 (46.1)			125 (51.7)		
CFM	EWB °F (°C)	Capacity MBtuh		Total System KW**	Capacity MBtuh		Total System KW**	Capacity MBtuh		Total System KW**	Capacity MBtuh		Total System KW**	Capacity MBtuh		Total System KW**	Capacity MBtuh		Total System KW**
		Total	Sens‡		Total	Sens‡		Total	Sens‡		Total	Sens‡		Total	Sens‡		Total	Sens‡	
24ACC660A**30 Outdoor Section With CNPV*6124A**+TDR Indoor Section																			
1750	57 (13.9)	66.03	33.71	3.54	62.86	32.49	3.92	59.49	31.24	4.33	55.92	29.95	4.78	52.09	28.60	5.29	47.94	27.18	5.86
	62 (16.7)	60.16	42.01	3.52	57.34	40.81	3.90	54.33	39.55	4.30	51.12	38.25	4.75	47.67	36.88	5.26	43.93	35.42	5.83
	63 (17.2)††	55.92	40.36	3.52	53.34	39.17	3.88	50.59	37.93	4.28	47.64	36.64	4.73	44.45	35.28	5.23	41.00	33.82	5.81
	67 (19.4)	55.30	50.14	3.52	52.96	52.74	3.88	50.72	50.72	4.28	48.29	48.29	4.73	45.62	45.62	5.24	42.65	42.65	5.83
	72 (22.2)	54.87	54.87	3.51	52.85	52.85	3.88	50.64	50.64	4.28	48.23	48.23	4.73	45.56	45.56	5.24	42.60	42.60	5.83
2000	57 (13.9)	66.94	35.49	3.63	63.63	34.26	4.01	60.13	32.98	4.43	56.41	31.66	4.88	52.46	30.30	5.39	48.19	28.86	5.96
	62 (16.7)	61.07	44.91	3.62	58.11	43.67	3.99	55.00	42.39	4.40	51.67	41.04	4.85	48.13	39.62	5.36	44.32	38.08	5.93
	63 (17.2)††	56.81	43.05	3.61	54.12	41.83	3.98	51.26	40.56	4.38	48.20	39.22	4.83	44.93	37.80	5.34	41.42	36.25	5.91
	67 (19.4)	57.02	57.02	3.61	54.82	54.82	3.98	52.43	52.43	4.39	49.82	49.82	4.84	46.96	46.96	5.35	43.79	43.79	5.93
	72 (22.2)	56.95	56.95	3.61	54.75	54.75	3.98	52.36	52.36	4.39	49.76	49.76	4.84	46.90	46.90	5.35	43.74	43.74	5.93
2250	57 (13.9)	67.58	37.19	3.73	64.15	35.93	4.11	60.53	34.64	4.53	56.72	33.31	4.98	52.67	31.92	5.49	48.30	30.47	6.06
	62 (16.7)	61.73	47.68	3.71	58.69	46.41	4.09	55.48	45.08	4.50	52.08	43.68	4.95	48.49	42.18	5.46	44.72	44.52	6.03
	63 (17.2)††	57.47	45.62	3.71	54.69	44.36	4.08	51.76	43.04	4.48	48.64	41.65	4.93	45.33	40.11	5.43	41.94	41.94	6.01
	67 (19.4)	58.71	58.71	3.71	56.35	56.35	4.08	53.80	53.80	4.49	51.03	51.03	4.94	48.01	48.01	5.45	44.66	44.66	6.03
	72 (22.2)	58.64	58.64	3.71	56.29	56.29	4.08	53.74	53.74	4.49	50.98	50.98	4.94	47.96	47.96	5.45	44.62	44.62	6.03

COOLING INDOOR MODEL	CAPACITY	POWER	FURNACE MODEL
*CNPV*6124A**	1.00	1.00	
CAP**6021A**	0.97	0.97	
CAP**6024A**	0.99	0.99	
CAP**6025A**	0.99	0.99	
CNPH*6024A**	0.99	0.99	
CNPH*6124A**	0.98	0.98	
CNPV*6024A**	0.99	0.99	
CSPH*6012A**	0.99	0.99	
FB4CNF060	0.98	0.98	
FE4ANB006	0.99	0.92	
FV4BNB006	0.99	0.92	
FV4CNB006	0.99	0.92	
FX4CN(B,F)060	1.00	0.95	
FX4DN(B,F)061	1.00	0.96	
FY4ANB060	0.99	1.03	
FY5BNB060	0.98	1.02	
CAP**6021A**	0.97	0.97	58CV(A,X)110–20
CAP**6024A**	0.97	0.94	58CV(A,X)110–20
CNPH*6024A**	0.97	0.94	58CV(A,X)110–20
CNPH*6124A**	0.98	0.94	58CV(A,X)110–20
CNPV*6024A**	0.97	0.97	58CV(A,X)110–20
CNPV*6124A**	0.99	0.95	58CV(A,X)110–20
CSPH*6012A**	0.98	0.94	58CV(A,X)110–20
CAP**6024A**	0.97	0.94	58CV(A,X)135–22
CNPH*6024A**	0.97	0.94	58CV(A,X)135–22
CNPH*6124A**	0.98	0.94	58CV(A,X)135–22
CNPV*6024A**	0.97	0.94	58CV(A,X)135–22
CNPV*6124A**	0.99	0.95	58CV(A,X)135–22
CSPH*6012A**	0.98	0.94	58CV(A,X)135–22
CAP**6024A**	0.98	0.94	58CV(A,X)155–22
CNPH*6024A**	0.98	0.94	58CV(A,X)155–22
CNPH*6124A**	0.98	0.94	58CV(A,X)155–22
CNPV*6024A**	0.98	0.94	58CV(A,X)155–22
CNPV*6124A**	0.99	0.95	58CV(A,X)155–22
CSPH*6012A**	0.98	0.94	58CV(A,X)155–22

COOLING INDOOR MODEL	CAPACITY	POWER	FURNACE MODEL
CNPH*6024A**	0.96	0.96	58ME(B,C)080–16
CSPH*6012A**	0.97	0.94	58ME(B,C)080–16
CAP**6021A**	0.97	0.94	58ME(B,C)100–20
CAP**6024A**	0.97	0.94	58ME(B,C)100–20
CNPH*6024A**	0.97	0.94	58ME(B,C)100–20
CNPH*6124A**	0.97	0.94	58ME(B,C)100–20
CNPV*6124A**	0.98	0.94	58ME(B,C)100–20
CSPH*6012A**	0.98	0.94	58ME(B,C)100–20
CAP**6024A**	0.97	0.94	58ME(B,C)120–20
CNPH*6024A**	0.97	0.94	58ME(B,C)120–20
CNPH*6124A**	0.98	0.94	58ME(B,C)120–20
CNPV*6024A**	0.97	0.94	58ME(B,C)120–20
CNPV*6124A**	0.99	0.95	58ME(B,C)120–20
CSPH*6012A**	0.98	0.94	58ME(B,C)120–20
CNPV*6124A**	0.98	0.94	58MV(B,C)120–20
CSPH*6012A**	0.97	0.94	58MV(B,C)120–20
CAP**6021A**	0.97	0.94	58PH*110–20
CAP**6024A**	0.97	0.94	58PH*110–20
CNPH*6024A**	0.98	0.94	58PH*110–20
CNPH*6124A**	0.98	0.94	58PH*110–20
CNPV*6024A**	0.98	0.94	58PH*110–20
CNPV*6124A**	0.99	0.95	58PH*110–20
CSPH*6012A**	0.98	0.94	58PH*110–20
CAP**6024A**	0.97	0.94	58PH*135–20
CNPH*6024A**	0.97	0.94	58PH*135–20
CNPH*6124A**	0.97	0.94	58PH*135–20
CNPV*6024A**	0.97	0.94	58PH*135–20
CNPV*6124A**	0.99	0.95	58PH*135–20
CSPH*6012A**	0.98	0.94	58PH*135–20
CNPV*6124A**	0.98	0.94	58UVB120–20
CNPV*6124A**	0.98	0.94	58UVB120–20
CAP**6024A**	0.97	0.97	58VLR120–20
CNPH*6024A**	0.97	0.97	58VLR120–20
CNPV*6024A**	0.97	0.97	58VLR120–20
CNPV*6124A**	0.99	0.95	58VLR120–20

COOLING INDOOR MODEL	CAPACITY	POWER	FURNACE MODEL
CSPH*6012A**	0.98	0.94	58VLR120–20
CAP**6024A**	0.97	0.96	59*N*A120V24**22
CAP**6025A**	0.97	0.96	59*N*A120V24**22
CNPH*6024A**	0.97	0.96	59*N*A120V24**22
CNPH*6124A**	0.97	0.96	59*N*A120V24**22
CNPV*6024A**	0.97	0.96	59*N*A120V24**22
CNPV*6124A**	0.98	0.97	59*N*A120V24**22
CSPH*6012A**	0.98	0.97	59*N*A120V24**22
CAP**6024A**	0.97	0.96	59*P5A120E24**22
CAP**6025A**	0.97	0.96	59*P5A120E24**22
CNPH*6024A**	0.97	0.96	59*P5A120E24**22
CNPH*6124A**	0.97	0.96	59*P5A120E24**22
CNPV*6024A**	0.97	0.96	59*P5A120E24**22
CNPV*6124A**	0.98	0.97	59*P5A120E24**22
CSPH*6012A**	0.98	0.97	59*P5A120E24**22

* Tested combination.

† Total and sensible capacities are net capacities. Blower motor heat has been subtracted.

‡ Sensible capacities shown are based on 80°F (27°C) entering air at the indoor coil. For sensible capacities at other than 80°F (27°C), deduct 835 Btuh (245 kW) per 1000 CFM (480 L/S) of indoor coil air for each degree below 80°F (27°C), or add 835 Btuh (245 kW) per 1000 CFM (480 L/S) of indoor coil air per degree above 80°F (27°C).

\# Detailed cooling capacities are based on indoor and outdoor unit at the same elevation per AHRI standard 210/240–2008. If additional tubing length and/or indoor unit is located above outdoor unit, a slight variation in capacity may occur.

** System kw is total of indoor and outdoor unit kilowatts.

†† At TVA rating indoor condition (75°F edb/63°F ewb). All other indoor air temperatures are at 80°F edb.

NOTE: When the required data falls between the published data, interpolation may be performed. Extrapolation is not an acceptable practice.

EWB — Entering Wet Bulb

CONDENSER ONLY RATINGS

SST °F (°C)		CONDENSER ENTERING AIR TEMPERATURES °F (°C)							
		55 (12.78)	65 (18.33)	75 (23.89)	85 (29.44)	95 (35.0)	105 (40.56)	115 (46.11)	125 (51.67)
24ACC618A30**									
30 (−1.11)	TCG	15.70	14.90	14.10	13.20	12.30	11.30	10.20	9.20
	SDT	66.60	76.20	85.80	95.30	104.80	114.30	123.70	133.10
	KW	0.75	0.87	0.99	1.12	1.26	1.41	1.60	1.81
35 (1.67)	TCG	17.50	16.60	15.70	14.70	13.70	12.60	11.50	10.30
	SDT	67.80	77.30	86.80	96.30	105.70	115.10	124.40	133.80
	KW	0.75	0.87	0.99	1.12	1.26	1.42	1.60	1.81
40 (4.44)	TCG	19.40	18.40	17.40	16.30	15.20	14.00	12.80	11.50
	SDT	69.00	78.50	87.90	97.30	106.60	115.90	125.20	134.50
	KW	0.74	0.87	0.99	1.12	1.26	1.42	1.60	1.81
45 (7.22)	TCG	21.50	20.30	19.20	18.00	16.70	15.50	14.10	12.80
	SDT	70.40	79.70	89.00	98.30	107.60	116.90	126.10	135.30
	KW	0.74	0.86	0.99	1.13	1.27	1.43	1.61	1.82
50 (10.0)	TCG	23.60	22.40	21.10	19.70	18.40	17.00	15.60	14.10
	SDT	71.60	80.90	90.10	99.40	108.60	117.80	127.00	136.20
	KW	0.73	0.86	1.00	1.13	1.28	1.44	1.62	1.82
55 (12.78)	TCG	25.90	24.50	23.10	21.60	20.10	18.60	17.10	15.50
	SDT	73.00	82.10	91.30	100.50	109.70	118.80	128.00	137.10
	KW	0.73	0.86	1.00	1.14	1.29	1.45	1.63	1.84
24ACC624A30**									
30 (−1.11)	TCG	21.10	20.10	19.00	17.90	16.70	15.40	14.10	12.70
	SDT	66.10	75.80	85.30	94.90	104.40	114.00	123.40	132.80
	KW	1.00	1.15	1.31	1.47	1.65	1.86	2.09	2.37
35 (1.67)	TCG	23.40	22.20	21.00	19.80	18.50	17.10	15.60	14.10
	SDT	67.20	76.80	86.30	95.80	105.30	114.70	124.10	133.50
	KW	0.99	1.15	1.31	1.47	1.66	1.86	2.10	2.37
40 (4.44)	TCG	25.80	24.60	23.20	21.80	20.40	18.90	17.30	15.70
	SDT	68.40	77.90	87.30	96.70	106.10	115.50	124.80	134.10
	KW	0.98	1.14	1.31	1.48	1.66	1.87	2.10	2.37
45 (7.22)	TCG	28.50	27.00	25.50	24.00	22.40	20.80	19.10	17.40
	SDT	69.60	79.00	88.30	97.70	107.00	116.30	125.60	134.90
	KW	0.97	1.14	1.31	1.48	1.67	1.87	2.11	2.37
50 (10.0)	TCG	31.20	29.60	28.00	26.30	24.60	22.80	21.00	19.10
	SDT	70.80	80.10	89.40	98.70	107.90	117.20	126.40	135.60
	KW	0.96	1.14	1.31	1.49	1.67	1.88	2.12	2.38
55 (12.78)	TCG	34.20	32.40	30.60	28.80	26.90	25.00	23.00	20.90
	SDT	72.10	81.30	90.50	99.70	108.90	118.10	127.30	136.40
	KW	0.95	1.13	1.31	1.49	1.69	1.90	2.13	2.39
24ACC630A30**									
30 (−1.11)	TCG	24.90	23.50	22.20	20.80	19.40	17.90	16.20	14.40
	SDT	68.10	77.50	87.00	96.40	105.80	115.10	124.40	133.60
	KW	1.27	1.43	1.60	1.78	1.99	2.23	2.50	2.81
35 (1.67)	TCG	27.50	26.00	24.50	23.10	21.50	19.90	18.10	16.20
	SDT	69.40	78.70	88.10	97.40	106.70	116.00	125.30	134.40
	KW	1.28	1.44	1.61	1.79	2.00	2.24	2.51	2.82
40 (4.44)	TCG	30.30	28.60	27.10	25.50	23.80	22.00	20.10	18.10
	SDT	70.70	79.90	89.20	98.50	107.70	117.00	126.20	135.30
	KW	1.29	1.44	1.61	1.80	2.01	2.25	2.52	2.83
45 (7.22)	TCG	33.30	31.50	29.80	28.00	26.20	24.30	22.30	20.10
	SDT	72.00	81.20	90.40	99.60	108.80	118.00	127.20	136.30
	KW	1.29	1.44	1.61	1.80	2.01	2.26	2.53	2.85
50 (10.0)	TCG	36.50	34.50	32.60	30.70	28.80	26.70	24.50	22.20
	SDT	73.50	82.50	91.70	100.80	110.00	119.20	128.20	137.20
	KW	1.29	1.44	1.61	1.80	2.02	2.26	2.54	2.86
55 (12.78)	TCG	39.90	37.80	35.70	33.60	31.50	29.30	26.90	24.40
	SDT	75.00	84.00	93.00	102.10	111.20	120.30	129.30	138.20
	KW	1.29	1.44	1.61	1.80	2.02	2.27	2.54	2.86
24ACC636A30**									
30 (−1.11)	TCG	30.40	28.80	27.20	25.60	23.90	22.10	20.20	18.20
	SDT	68.90	78.20	87.50	96.80	106.20	115.50	124.90	134.20
	KW	1.49	1.72	1.95	2.21	2.49	2.81	3.20	3.64
35 (1.67)	TCG	33.50	31.80	30.10	28.30	26.50	24.50	22.50	20.30
	SDT	70.10	79.30	88.60	97.90	107.20	116.50	125.80	135.00
	KW	1.49	1.73	1.96	2.22	2.50	2.82	3.20	3.65
40 (4.44)	TCG	37.00	35.10	33.20	31.20	29.20	27.10	24.90	22.60
	SDT	71.40	80.60	89.80	99.00	108.20	117.40	126.70	135.90
	KW	1.50	1.73	1.97	2.23	2.51	2.84	3.21	3.65
45 (7.22)	TCG	40.60	38.60	36.50	34.30	32.10	29.80	27.40	24.90
	SDT	72.80	81.90	91.00	100.20	109.40	118.50	127.70	136.80
	KW	1.51	1.75	1.99	2.24	2.53	2.85	3.23	3.66
50 (10.0)	TCG	44.50	42.30	40.00	37.70	35.20	32.70	30.10	27.40
	SDT	74.40	83.30	92.40	101.50	110.50	119.60	128.70	137.70
	KW	1.53	1.76	2.01	2.26	2.55	2.87	3.24	3.67
55 (12.78)	TCG	48.70	46.20	43.70	41.20	38.50	35.80	33.00	30.00
	SDT	76.00	84.90	93.80	102.80	111.80	120.80	129.80	138.70
	KW	1.55	1.79	2.03	2.29	2.57	2.90	3.26	3.69

See notes on page 53

CONDENSER ONLY RATINGS CONTINUED

SST °F (°C)		CONDENSER ENTERING AIR TEMPERATURES °F (°C)							
		55 (12.78)	65 (18.33)	75 (23.89)	85 (29.44)	95 (35.0)	105 (40.56)	115 (46.11)	125 (51.67)
24ACC642A30**									
30 (−1.11)	TCG	37.90	36.20	34.30	32.30	30.10	27.90	25.50	23.00
	SDT	69.80	79.20	88.70	98.10	107.40	116.70	125.90	135.10
	KW	1.83	2.03	2.26	2.54	2.86	3.22	3.63	4.09
35 (1.67)	TCG	41.90	40.00	37.90	35.70	33.30	30.80	28.30	25.60
	SDT	71.20	80.60	89.90	99.20	108.40	117.70	126.80	136.00
	KW	1.84	2.04	2.28	2.56	2.88	3.24	3.65	4.10
40 (4.44)	TCG	46.10	44.00	41.70	39.20	36.70	34.00	31.20	28.30
	SDT	72.70	81.90	91.20	100.40	109.60	118.70	127.80	136.90
	KW	1.85	2.05	2.30	2.58	2.90	3.26	3.67	4.13
45 (7.22)	TCG	50.70	48.30	45.80	43.10	40.20	37.30	34.30	31.10
	SDT	74.20	83.30	92.50	101.60	110.80	119.80	128.90	137.90
	KW	1.86	2.07	2.32	2.60	2.92	3.29	3.70	4.15
50 (10.0)	TCG	55.50	52.90	50.10	47.10	44.00	40.80	37.50	34.10
	SDT	75.80	84.80	93.90	103.00	112.00	121.00	130.00	138.90
	KW	1.87	2.09	2.34	2.63	2.95	3.32	3.73	4.19
55 (12.78)	TCG	60.70	57.70	54.60	51.30	47.90	44.40	40.80	37.10
	SDT	77.40	86.40	95.40	104.40	113.40	122.30	131.20	140.00
	KW	1.89	2.11	2.36	2.66	2.99	3.36	3.77	4.22
24ACC648A30**									
30 (−1.11)	TCG	41.30	39.10	36.90	34.70	32.40	30.00	27.50	24.80
	SDT	67.80	77.20	86.60	96.00	105.40	114.70	124.00	133.30
	KW	2.01	2.31	2.59	2.89	3.19	3.54	3.93	4.38
35 (1.67)	TCG	45.60	43.20	40.80	38.30	35.80	33.20	30.40	27.60
	SDT	69.00	78.30	87.70	97.00	106.30	115.60	124.80	134.10
	KW	1.94	2.27	2.58	2.89	3.21	3.56	3.95	4.39
40 (4.44)	TCG	50.50	47.70	45.00	42.20	39.40	36.60	33.60	30.50
	SDT	70.40	79.60	88.80	98.00	107.20	116.50	125.70	134.80
	KW	1.84	2.20	2.54	2.87	3.21	3.57	3.97	4.41
45 (7.22)	TCG	55.70	52.60	49.50	46.50	43.40	40.20	36.90	33.50
	SDT	71.80	80.80	90.00	99.10	108.30	117.40	126.60	135.70
	KW	1.69	2.09	2.46	2.83	3.19	3.57	3.98	4.43
50 (10.0)	TCG	61.40	57.90	54.50	51.00	47.60	44.10	40.50	36.70
	SDT	73.20	82.20	91.30	100.30	109.40	118.50	127.50	136.50
	KW	1.50	1.94	2.36	2.76	3.15	3.55	3.98	4.44
55 (12.78)	TCG	67.60	63.60	59.80	55.90	52.10	48.20	44.20	40.10
	SDT	74.70	83.70	92.60	101.60	110.60	119.60	128.50	137.40
	KW	1.26	1.75	2.21	2.65	3.08	3.51	3.97	4.44
24ACC660A30**									
30 (−1.11)	TCG	45.10	43.80	42.30	40.50	38.50	36.20	33.50	30.50
	SDT	69.00	78.40	87.70	97.10	106.40	115.60	124.80	134.00
	KW	2.22	2.52	2.83	3.17	3.56	4.00	4.53	5.15
35 (1.67)	TCG	50.00	48.40	46.70	44.70	42.50	40.00	37.10	33.80
	SDT	70.40	79.70	89.00	98.20	107.40	116.60	125.80	134.90
	KW	2.21	2.52	2.85	3.19	3.58	4.03	4.55	5.16
40 (4.44)	TCG	55.10	53.40	51.40	49.20	46.70	44.00	40.80	37.30
	SDT	71.90	81.10	90.20	99.40	108.50	117.60	126.70	135.70
	KW	2.21	2.53	2.86	3.21	3.61	4.05	4.57	5.18
45 (7.22)	TCG	60.70	58.60	56.40	54.00	51.20	48.20	44.80	41.00
	SDT	73.50	82.50	91.60	100.70	109.70	118.70	127.70	136.70
	KW	2.20	2.53	2.87	3.23	3.63	4.08	4.60	5.20
50 (10.0)	TCG	66.50	64.20	61.70	59.00	56.00	52.60	48.90	44.70
	SDT	75.10	84.00	93.00	102.00	111.00	119.90	128.80	137.60
	KW	2.19	2.53	2.89	3.26	3.66	4.11	4.63	5.22
55 (12.78)	TCG	72.80	70.10	67.30	64.20	60.90	57.20	53.10	48.60
	SDT	76.80	85.70	94.50	103.40	112.30	121.10	129.90	138.60
	KW	2.18	2.54	2.90	3.28	3.69	4.15	4.66	5.25

* AHRI listing applies only to systems shown in Combination Ratings table.

KW – Outdoor Unit Kilowatts Only.

SDT – Saturated Temperature Leaving Compressor (°F)

SST – Saturated Temperature Entering Compressor (°F/°C)

TCG – Gross Cooling Capacity (1000 Btuh)

GUIDE SPECIFICATIONS
GENERAL

System Description

Outdoor-mounted, air-cooled, split-system air conditioner unit suitable for ground or rooftop installation. Unit consists of a hermetic compressor, an air-cooled coil, propeller-type condenser fan, and a control box. Unit will discharge supply air upward as shown on contract drawings. Unit will be used in a refrigeration circuit to match up to a packaged fan coil or coil unit.

Quality Assurance

— Unit will be rated in accordance with the latest edition of AHRI Standard 210.

— Unit will be certified for capacity and efficiency, and listed in the latest AHRI directory.

— Unit construction will comply with latest edition of ANSI/ ASHRAE and with NEC.

— Unit will be constructed in accordance with UL standards and will carry the UL label of approval. Unit will have c-UL-us approval.

— Unit cabinet will be capable of withstanding Federal Test Method Standard No. 141 (Method 6061) 500-hr salt spray test.

— Air-cooled condenser coils will be leak tested at 150 psig and pressure tested at 450 psig.

— Unit constructed in ISO9001 approved facility.

Delivery, Storage, and Handling

— Unit will be shipped as single package only and is stored and handled per unit manufacturer's recommendations.

Warranty (for inclusion by specifying engineer)

— U.S. and Canada only.

PRODUCTS

Equipment

Factory assembled, single piece, air-cooled air conditioner unit. Contained within the unit enclosure is all factory wiring, piping, controls, compressor, refrigerant charge Puron® (R-410A), and special features required prior to field start-up.

Unit Cabinet

— Unit cabinet will be constructed of galvanized steel, bonderized, and coated with a powder coat paint.

Fans

— Condenser fan will be direct-drive propeller type, discharging air upward.

— Condenser fan motors will be totally enclosed, 1-phase type with class B insulation and permanently lubricated bearings. Shafts will be corrosion resistant.

— Fan blades will be statically and dynamically balanced.

— Condenser fan openings will be equipped with coated steel wire safety guards.

Compressor

— Compressor will be hermetically sealed.

— Compressor will be mounted on rubber vibration isolators.

Condenser Coil

— Condenser coil will be air cooled.

— Coil will be constructed of aluminum fins mechanically bonded to copper tubes which are then cleaned, dehydrated, and sealed.

Refrigeration Components

— Refrigeration circuit components will include liquid-line shutoff valve with sweat connections, vapor-line shutoff valve with sweat connections, system charge of Puron® (R-410A) refrigerant, and compressor oil.

— Unit will be equipped with high-pressure switch, low pressure switch and filter drier for Puron refrigerant.

Operating Characteristics

— The capacity of the unit will meet or exceed _____ Btuh at a suction temperature of _____ °F/°C. The power consumption at full load will not exceed _____ kW.

— Combination of the unit and the evaporator or fan coil unit will have a total net cooling capacity of _____ Btuh or greater at conditions of _____ CFM entering air temperature at the evaporator at _____ °F/°C wet bulb and _____ °F/°C dry bulb, and air entering the unit at _____ °F/°C.

— The system will have a SEER of _____ Btuh/watt or greater at DOE conditions.

Electrical Requirements

— Nominal unit electrical characteristics will be _____ v, single phase, 60 hz. The unit will be capable of satisfactory operation within voltage limits of _____ v to _____ v.

— Unit electrical power will be single point connection.

— Control circuit will be 24v.

Special Features

— Refer to section of this literature identifying accessories and descriptions for specific features and available enhancements.

SYSTEM DESIGN SUMMARY

1. Intended for outdoor installation with free air inlet and outlet. Outdoor fan external static pressure available is less than 0.01-in. wc.
2. Minimum outdoor operating air temperature for cooling mode without low-ambient operation accessory is 55°F (12.8°C).
3. Maximum outdoor operating air temperature is 125°F (51.7°C).
4. For reliable operation, unit should be level in all horizontal planes.
5. For interconnecting refrigerant tube lengths greater than 80 ft (23.4 m) and/or 35 ft (10.7 m) vertical differential, consult Residential Piping and Longline Guideline and Service Manual available from equipment distributor.
6. If any refrigerant tubing is buried, provide a 6 in. (152.4 mm) vertical rise to the valve connections at the unit. Refrigerant tubing lengths up to 36 in. (914.4 mm) may be buried without further consideration. Do not bury refrigerant lines longer than 36 in. (914.4 mm).
7. Use only copper wire for electric connection at unit. Aluminum and clad aluminum are not acceptable for the type of connector provided.
8. Do not apply capillary tube indoor coils to these units.
9. Factory-supplied filter drier must be installed.

Copyright 2011 Carrier Corp. • 7310 W. Morris St. • Indianapolis, IN 46231

Printed in U.S.A. Edition Date: 08/11

Catalog No: 24ACC6−2PD

Manufacturer reserves the right to change, at any time, specifications and designs without notice and without obligations.

Replaces: 24ACC6−1PD