24ANB6
Infinity® Air Conditioner with Puron® Refrigerant
1–1/2 to 5 Nominal Tons (Size 18–60)

Carrier
turn to the experts

Product Data

Puron INFINITY SERIES

Carrier's Air Conditioners with Puron® refrigerant provide a collection of features unmatched by any other family of equipment. The 24ANB6 has been designed utilizing Carrier's non-ozone depleting Puron refrigerant.

This product has been designed and manufactured to meet Energy Star® criteria for energy efficiency when matched with appropriate coil components. Refer to the combination ratings in the AHRI Directory for system combinations that meet Energy Star® guidelines.

NOTE: Ratings contained in this document are subject to change at any time. Always refer to the AHRI directory (www.ahridirectory.org) for the most up-to-date ratings information.

INDUSTRY LEADING FEATURES / BENEFITS

Efficiency

- 14 - 16 SEER / 11.0- 13.5 EER
- Microtube Technology™ refrigeration system
- Indoor air quality accessories available

Sound

- Sound level as low as 66 dBA
- Quiet mount split post compressor grommets
- Forward-swept condenser fan blade
- Compressor sound hood
- 8 pole PSC ball bearing outdoor condenser fan motor

Comfort

- System supports Infinity Control or standard thermostat controls

Reliability

- Non-ozone depleting Puron® refrigerant
- Scroll compressor
- Internal pressure relief valve
- Internal thermal overload
- Filter drier
- High and low pressure switches
- Balanced refrigeration system for maximum reliability

Durability

WeatherArmor Ultra™ protection package:

- Solid, durable sheet metal construction
- Louvered coil guard
- Baked-on, complete outer coverage, powder paint

Applications

- Long-line - up to 250 feet (76.20 m) total equivalent length, up to 200 feet (60.96 m) condenser above evaporator, or up to 80 ft. (24.38 m) evaporator above condenser (See Longline Guide for more information.)
- Low ambient (down to -10°F/-23°C) with accessory kit

MODEL NUMBER NOMENCLATURE

1	2	3	4	5	6	7	8	9	10	11	12	13
N	N	A	A	A/N	N	N	N	A/N	A/N	A/N	N	N
2	4	A	N	B	6	2	4	A	0	0	3	0
Product Series		Product Family	Tier	Major Series	SEER	Cooling Capacity		Variations	Open	Open	Voltage	Minor Series
24=AC		A=RES AC	N=Infinity Series	B=Puron	6=16 SEER (Nominal)			A=Standard	0=Not Defined	0=Not Defined	3=208/230–1	0, 1, 2...

Puron

AHRI CERTIFIED TM www.ahridirectory.org

Use of the AHRI Certified TM Mark indicates a manufacturer's participation in the program For verification of certification for individual products, go to www.ahridirectory.org.

c UL US

ENERGY STAR

This product has been designed and manufactured to meet Energy Star® criteria for energy efficiency when matched with appropriate coil components. However, proper refrigerant charge and proper air flow are critical to achieve rated capacity and efficiency. Installation of this product should follow all manufacturing refrigerant charging and air flow instructions. **Failure to confirm proper charge and air flow may reduce energy efficiency and shorten equipment life.**

STANDARD FEATURES

Feature	18	24	30	36	42	48	60
Puron Refrigerant	X	X	X	X	X	X	X
Maximum SEER *	16.0	16.0	16.5	16.5	16.0	16.0	16.0
Scroll Compressor	X	X	X	X	X	X	X
Field Installed Filter Drier	X	X	X	X	X	X	X
Front Seating Service Valves	X	X	X	X	X	X	X
Internal Pressure Relief Valve	X	X	X	X	X	X	X
Internal Thermal Overload	X	X	X	X	X	X	X
Long Line capability	X	X	X	X	X	X	X
Low Ambient capability with Kit	X	X	X	X	X	X	X
High Pressure Switch	X	X	X	X	X	X	X
Low Pressure Switch	X	X	X	X	X	X	X
Compressor Sound Blanket	X	X	X	X	X	X	X
Louvered Coil Guard	X	X	X	X	X	X	X

* Based on tested combinations

X = Standard

PHYSICAL DATA

UNIT SIZE SERIES	18–30	24–30	30–30	36–30	42–30	48–30	60–30
Operating Weight lb (Kg)	184 (83)	186 (84)	193 (88)	209 (95)	261 (118)	303 (137)	334 (151)
Shipping Weight lb (Kg)	217 (98)	219 (99)	227 (103)	250 (113)	303 (137)	346 (157)	380 (172)
Compressor Type	Scroll						
REFRIGERANT	R–410A						
Control	TXV (R–410A Hard Shutoff)						
Charge lb (Kg)	5.25 (2.38)	6.00 (2.72)	6.81 (3.09)	7.00 (3.18)	8.62 (3.91)	13.00 (5.9)	14.50 (6.58)
COND FAN	Propeller Type, Direct Drive						
Air Discharge	Vertical						
Air Qty (CFM)	2233	2614	2614	3223	3810	4046	4046
Motor HP	1/12	1/10	1/10	1/12	1/5	1/4	1/4
Motor RPM	800	800	800	800	800	800	800
COND COIL							
Face Area (Sq ft)	15.07	15.07	17.22	17.58	25.12	25.12	30.14
Fins per In.	25	25	25	25	25	20	20
Rows	1	1	1	1	1	2	2
Circuits	3	4	4	4	6	7	8
VALVE CONNECT. (In. ID)							
Vapor	3/4	3/4	3/4	7/8	7/8	7/8	7/8
Liquid	3/8	3/8	3/8	3/8	3/8	3/8	3/8
REFRIGERANT TUBES (In. OD)							
Rated Vapor*	3/4			7/8			1–1/8
Max Liquid Line	3/8”						

*Units are rated with 25 ft (7.6 m) of lineset length. See Vapor Line Sizing and Cooling Capacity Loss table when using other sizes and lengths of lineset.

NOTE: See unit Installation Instruction for proper installation.

REFRIGERANT CHARGE ADJUSTMENTS

Liquid Line Size	Puron Charge oz/ft (g/m)
3/8	0.60 (17.74) (Factory charge for lineset = 9 oz / 266.16 g)
5/16	0.40 (11.83)
1/4	0.27 (7.98)

Units are factory charged for 15 ft (4.6 m) of 3/8" liquid line. The factory charge for 3/8" lineset 9 oz. When using other length or diameter liquid lines, charge adjustments are required per the chart above.

Charging Formula:

[(Lineset oz/ft x total length) – (factory charge for lineset)] = charge adjustment

Example 1: System has 15 ft of line set using existing 1/4" liquid line. What charge adjustment is required?

Formula: (.27 oz/ft x 15ft) – (9 oz) = (-4.95) oz.

Net result is to remove 4.95 oz of refrigerant from the system

Example 2: System has 45 ft of existing 5/16" liquid line. What is the charge adjustment?

Formula: (.40 oz/ft. x 45ft) – (9 oz.) = 9 oz.

Net result is to add 9 oz of refrigerant to the system

NOTE: Conditions must be favorable for charging by subcooling method. Indoor temperature must be 70°F to 80°F (21.1°C to 26.7°C), and outdoor temperature must be 70°F to 100°F (21.1°C to 37.8°C). If outside these conditions, adjust charge for long line sets by weigh-in method.

LONG LINE APPLICATIONS

An application is considered Long Line, when the refrigerant level in the system requires the use of accessories to maintain acceptable refrigerant management for systems reliability. Accessory requirements depend on the system type, and are defined in this document. Defining a system as long line depends on the liquid line diameter, indoor metering device (piston or TXV), actual length of the tubing, and vertical separation between the indoor and outdoor units.

For Air Conditioner systems, the charts below show when an application is considered Long Line:

AC with Puron® Refrigerant Long Line Description ft (m) Beyond these lengths, a TXV is required

Total Length	Outdoor Unit Above or Below Indoor Unit
TXV required beyond 50 ft. (15.2 m)	TXV required beyond 20 ft. (6.1 m)

AC with Puron® Refrigerant Long Line Description ft (m) (Beyond these lengths, long line accessories are required)

Liquid Line Size	Units On Same Level	Outdoor Below Indoor	Outdoor Above Indoor
1/4 + TXV	No accessories needed within allowed lengths	No accessories needed within allowed lengths	175 (53.3)
5/16 + TXV	120 (36.6)	50 (15.2) vertical or 120 (36.6) total	120 (36.6)
3/8 + TXV	80 (24.4)	35 (10.7) vertical or 80 (24.4) total	80 (24.4)

Note: See Residential Piping and Long Line Guideline for details

VAPOR LINE SIZING AND COOLING CAPACITY LOSS

Acceptable vapor line diameters provide adequate oil return to the compressor while avoiding excessive capacity loss. The suction line diameters shown in the chart below are acceptable for AC systems with Puron refrigerant:

Vapor Line Sizing and Cooling Capacity Losses — Puron® Refrigerant 1-Stage Air Conditioner Applications

Unit Nominal Size (Btuh)	Maximum Liquid Line Diameters (In. OD)	Vapor Line Diameters (In. OD)	Cooling Capacity Loss (%) Total Equivalent Line Length ft. (m)								
			26–50 (7.9–15.2)	51–80 (15.5–24.4)	81–100 (24.7–30.5)	101–125 (30.8–38.1)	126–150 (38.4–45.7)	151–175 (46.0–53.3)	176–200 (53.6–61.0)	201–225 (61.3–68.6)	226–250 (68.9–76.2)
018	3/8	1/2	1	2	3	5	6	7	8	9	11
		5/8	0	1	1	1	2	2	2	3	3
		3/4	0	0	0	0	1	1	1	1	1
024	3/8	5/8	0	1	2	2	3	3	4	5	5
		3/4	0	0	1	1	1	1	1	2	2
		7/8	0	0	0	0	0	1	1	1	1
030	3/8	5/8	1	2	3	3	4	5	6	7	8
		3/4	0	0	1	1	1	2	2	2	3
		7/8	0	0	0	0	1	1	1	1	1
036	3/8	5/8	1	2	4	5	6	8	9	10	12
		3/4	0	1	1	2	2	3	3	4	4
		7/8	0	0	0	1	1	1	1	2	2
042	3/8	3/4	0	1	2	2	3	4	4	5	6
		7/8	0	0	1	1	1	2	2	2	3
		1 1/8	0	0	0	0	0	0	0	0	0
048	3/8	3/4	0	1	2	3	4	5	5	6	7
		7/8	0	0	1	1	2	2	2	3	3
		1 1/8	0	0	0	0	0	0	0	1	1
060	3/8	3/4	1	2	4	5	6	7	9	10	11
		7/8	0	1	2	2	3	4	4	5	5
		1 1/8	0	0	0	1	1	1	1	1	1

Applications in this area may be long line and may have height restrictions. See the *Residential Piping and Long Line Guideline*.

ACCESSORY USAGE GUIDELINE

ACCESSORY	REQUIRED FOR LOW–AMBIENT COOLING APPLICATIONS (Below 55°F / 12.8°C)	REQUIRED FOR LONG LINE APPLICATIONS*
Compressor Start Assist Capacitor and Relay	Yes	Yes
Crankcase Heater	Yes	Yes
Evaporator Freeze Thermostat	Yes (For non–Infinity systems only)	No
Low–ambient Pressure Switch	Yes (For non–Infinity system only)	No
Support Feet	Recommended	No
Thermal Expansion Valve (TXV) Hard Shutoff	Yes	Yes†
Winter Start Control	Yes (For non–Infinity systems only)	No

* Refer to the Residential Piping and Long Line Guideline

† TXV required beyond 20 ft. (6.1 m) vertical separation or 50 ft. (15.2 m) total length.

Accessory Description and Usage (Listed Alphabetically)

1. Compressor Start Assist - Capacitor and Relay

Start capacitor and relay gives a ”hard” boost to compressor motor at each start up.

Usage Guideline:

Required for reciprocating compressors in the following applications:

Long line

Low ambient cooling

Hard shut off expansion valve on indoor coil

Liquid line solenoid on indoor coil

Required for single-phase scroll compressors in the following applications:

Long line

Low ambient cooling

Suggested for all compressors in areas with a history of low voltage problems.

2. Compressor Start Assist — PTC Type

Solid state electrical device which gives a ”soft” boost to the compressor at each start-up.

Usage Guideline:

Suggested in installations with marginal power supply.

3. Crankcase Heater

An electric resistance heater which mounts to the base of the compressor to keep the lubricant warm during off cycles. Improves compressor lubrication on restart and minimizes the chance of liquid slugging.

Usage Guideline:

Required in low ambient cooling applications.

Required in long line applications.

Suggested in all commercial applications.

4. Cycle Protector

The cycle protector is designed to prevent compressor short cycling. This control provides an approximate 5-minute delay after power to the compressor has been interrupted for any reason, including power outage, protector control trip, thermostat jiggling, or normal cycling.

5. Evaporator Freeze Thermostat

An SPST temperature-actuated switch that stops unit operation when evaporator reaches freeze-up conditions.

Usage Guideline:

Required when low ambient kit has been added.

6. Low-Ambient Pressure Switch Kit

A long life pressure switch which is mounted to outdoor unit service valve. It is designed to cycle the outdoor fan motor in order to maintain head pressure within normal operating limits (approximately 100 psig to 225 psig). The control will maintain working head pressure at low-ambient temperatures down to 0°F (-18°C) when properly installed.

Usage Guideline:

A Low-Ambient Pressure Switch or MotorMaster® Low-Ambient Controller must be used when cooling operation is used at outdoor temperatures below 55°F (12.8°C).

7. Outdoor Air Temperature Sensor

Designed for use with Carrier Thermostats listed in this publication. This device enables the thermostat to display the outdoor temperature. This device also

is required to enable special thermostat features such as auxiliary heat lock out.

Usage Guideline:

Suggested for all Carrier thermostats listed in this publication.

8. Support Feet

Four stick-on plastic feet that raise the unit 4 in. (101.6 mm) above the mounting pad. This allows sand, dirt, and other debris to be flushed from the unit base, minimizing corrosion.

Usage Guideline:

Suggested in the following applications:

Coastal installations.

Windy areas or where debris is normally circulating.

Rooftop installations.

For improved sound ratings.

9. Thermostatic Expansion Valve (TXV)

A modulating flow-control valve which meters refrigerant liquid flow rate into the evaporator in response to the superheat of the refrigerant gas leaving the evaporator.

Kit includes valve, adapter tubes, and external equalizer tube. Hard shut off types are available.

NOTE: When using a hard shut off TXV with single phase reciprocating compressors, a Compressor Start Assist Capacitor and Relay is required.

Usage Guideline:

Required to achieve AHRI ratings in certain equipment combinations. Refer to combination ratings.

Hard shut off TXV or LLS required in air conditioner long line applications.

Required for use on all zoning systems.

Accessory Description and Usage (Listed Alphabetically) (Continued)

10. Time-Delay Relay

An SPST delay relay which briefly continues operation of indoor blower motor to provide additional cooling after the compressor cycles off.

NOTE: Most indoor unit controls include this feature. For those that do not, use the guideline below.

Usage Guideline:

For improved efficiency ratings for certain combinations of indoor and outdoor units. Refer to AHRI Unitary Directory.

12. Winter Start Control

This control is designed to alleviate nuisance opening of the low-pressure switch by bypassing it for the first 3 minutes of operation.

ACCESSORIES

KIT NUMBER	KIT NAME	18	24	30	36	42	48	60
KAACH1601AAA	CRANKCASE HEATER					X		
KAACH1701AAA	CRANKCASE HEATER	X	X	X	X			
STANDARD	CRANKCASE HEATER						S	S
KAACS0201PTC	PTC START ASSIST	X	X	X	X	X	X	X
KAALS0201LLS	SOLENOID VALVE	X	X	X	X	X	X	X
KAATD0101TDR	TIME DELAY	X	X	X	X	X	X	X
KAAWS0101AAA	WINTER START	X	X	X	X	X	X	X
KSAFT0101AAA	FREEZE THERMOSTAT	X	X	X	X	X	X	X
KSAHS2701AAA	HARD START (CAP/RELAY)	X	X	X	X	X	X	X
KSALA0301410	LOW AMBIENT PRESSURE SWITCH	X	X	X	X	X	X	X
KSASF0201AAA	SUPPORT FEET	X	X	X	X	X	X	X
KSATX0201PUR	TXV KIT (HSO)	X	X	X				
KSATX0301PUR	TXV KIT (HSO)				X	X		
KSATX0401PUR	TXV KIT (HSO)						X	X
KSBTX0201PUR	TXV KIT	X	X	X				
KSBTX0301PUR	TXV KIT				X	X		
KSBTX0401PUR	TXV KIT						X	X

X = Accessory, S = Standard

ACCESSORY CONTROLS

PART NUMBER	DESCRIPTION
SYSTXCCITN01	Infinity Touch Control (non–Wi–Fi)
SYSTXCCITW01	Infinity Touch Control with Wi–Fi & Wireless Access Point
SYSTXCCUID01–V	Infinity Control Deluxe 7–Day Programmable (4–Wire User Interface w/ multiple functionality)
SYSTXCCUIZ01–V	Infinity Control Deluxe Zoning 7–Day Programmable (Wall–mounted control for a multi–zone system. w/ multiple functionality)
SYSTXCCUID01–B	Infinity Control Deluxe 7–Day Programmable (Wall–mounted system control.)
SYSTXCCUIZ01–B	Infinity Control Deluxe Zoning 7–Day Programmable (Wall–mounted control for a multi–zone system.)
SYSTXCC4ZC01	Infinity 4–Zone Damper Control Module (Wall–mounted control for a four–zone system.)
SYSTXCCSMS01	Infinity Smart Sensor (Optional wall control used to monitor temperature and/or fan control in an individual zone.)
SYSTXCCRRS01	Infinity Remote Room Sensor (Monitors temperature in an individual zone.)
SYSTXCCRCT01 or SYSTXCCRWF01	Infinity System Remote Access Module (Hardware for wireless access and control via internet.)
SYSTXCCNIM01	Infinity Network Interface Module (Connects Heat Recovery and Energy Recovery Ventilators on non–zoning applications.)

ELECTRICAL DATA

UNIT SIZE – SERIES	V/PH	OPER VOLTS*		COMPR		FAN	MCA	MAX FUSE** or CKT BRK AMPS
		MAX	MIN	LRA	RLA	FLA		
18–30	208/230/1	253	197	48.0	9.0	0.45	11.8	20
24–30				58.3	13.5	0.70	17.5	25
30–30				64.0	12.8	0.70	16.7	25
36–30				77.0	14.1	0.60	18.2	30
42–30				112.0	17.9	1.00	23.4	40
48–30				109.0	19.9	1.20	26.1	40
60–30				135.0	21.4	1.20	28.0	40

* Permissible limits of the voltage range at which the unit will operate satisfactorily
** Time–Delay fuse.
FLA – Full Load Amps
LRA – Locked Rotor Amps
MCA – Minimum Circuit Amps
RLA – Rated Load Amps
NOTE: Control circuit is 24–V on all units and requires external power source. Copper wire must be used from service disconnect to unit. All motors/compressors contain internal overload protection.
Complies with 2007 requirements of ASHRAE Standards 90.1

A-WEIGHTED SOUND POWER (dBA)

UNIT SIZE–SERIES	STANDARD RATING	TYPICAL OCTAVE BAND SPECTRUM (without tone adjustment)						
		125	250	500	1000	2000	4000	8000
18–30	66	52.0	56.5	60.5	61.5	59.0	53.5	44.5
24–30	67	51.5	58.0	61.5	62.5	59.5	54.0	47.5
30–30	68	56.5	60.0	63.0	62.5	59.5	54.5	46.0
36–30	69	55.5	61.0	62.0	62.5	61.0	57.0	49.0
42–30	68	53.0	60.5	62.0	63.0	60.5	58.0	51.0
48–30	70	55.0	61.0	63.5	63.0	60.5	57.0	52.0
60–30	70	55.0	61.5	63.0	63.0	59.5	57.0	51.5

NOTE: Tested in accordance with AHRI Standard 270–08 (not listed in AHRI).

CHARGING SUBCOOLING (TXV-TYPE EXPANSION DEVICE)

UNIT SIZE–SERIES	REQUIRED SUBCOOLING °F (°C)
18–30	9 (5.0)
24–30	11 (6.1)
30–30	10 (5.6)
36–30	11 (6.1)
42–30	11 (6.1)
48–30	12 (6.7)
60–30	12 (6.7)

DIMENSIONS

UNIT	SERIES	ELECTRICAL CHARACTERISTICS				A		B		C		D		E		F		G		H		I		J		K		OPERATING WEIGHT		SHIPPING WEIGHT		SHIPPING LENGTH / WIDTH (Sq.)		SHIPPING HEIGHT	
						INCH	MM	INCH	MM	INCH	MM	INCH	MM	INCH	MM	INCH	MM	INCH	MM	INCH	MM	INCH	MM	INCH	MM	INCH	MM	Lbs	Kgs	Lbs	Kgs	INCH	MM	INCH	MM
24ANB618A0030010	0	Y	N	N	N	31 3/16	792.5	29 3/16	741.4	3/4	19.1	6 9/16	166.1	24 11/16	626.3	9 1/8	231.3	5/16	7.9	3	76.2	15 1/4	387.4	15	381.0	14	355.6	184	83.5	217	98.4	33 5/16	846.6	36 5/8	929.5
24ANB624A0030010	0	Y	N	N	N	31 3/16	792.5	29 3/16	741.4	3/4	19.1	6 9/16	166.1	24 11/16	626.3	9 1/8	231.3	5/16	7.9	3	76.2	15 1/4	387.4	15 1/4	387.4	14	355.6	186	84.4	219	99.3	33 5/16	846.6	36 5/8	929.5
24ANB630A0030010	0	Y	N	N	N	31 3/16	792.5	32 9/16	827.8	3/4	19.1	6 9/16	166.1	24 11/16	626.3	9 1/8	231.3	5/16	7.9	3	76.2	15 3/4	400.1	15 1/2	393.7	16 1/2	419.1	193	87.5	227	103.0	33 5/16	846.6	40	1015.8
24ANB636A0030010	0	Y	N	N	N	35	889.0	30 3/16	767.2	7/8	22.2	6 9/16	166.1	28 7/16	722.8	9 1/8	231.3	5/16	7.9	3	76.2	17 1/4	438.2	17 1/8	435.0	14 3/4	374.7	209	94.8	250	113.4	37 1/8	943.1	36 5/8	929.5
24ANB642A0030010	0	Y	N	N	N	35	889.0	40 3/8	1026.3	7/8	22.2	6 9/16	166.1	28 7/16	722.8	9 1/8	231.3	5/16	7.9	3	76.2	17 1/2	444.5	16 3/4	425.5	18 1/4	463.6	261	118.4	303	137.4	37 1/8	943.1	45 1/4	1149.1
24ANB648A0030010	0	Y	N	N	N	35	889.0	40 3/8	1026.3	7/8	22.2	6 9/16	166.1	28 7/16	722.8	9 1/8	231.3	5/16	7.9	3	76.2	17 1/2	444.5	17 1/4	438.2	18 3/4	476.3	303	137.4	346	156.9	37 1/8	943.1	45 1/4	1149.1
24ANB660A0030010	0	Y	N	N	N	35	889.0	47 3/16	1199.0	7/8	22.2	6 9/16	166.1	28 7/16	722.8	9 1/8	231.3	5/16	7.9	3	76.2	17 3/4	450.9	16	406.4	21 1/2	546.1	334	151.5	380	172.4	37 1/8	943.1	52 7/16	1332.0

208-230-1-60	208/230-3-60	460-3-60	575-3-60	Y=YES N=NO

NOTES:

1. CENTER OF GRAVITY

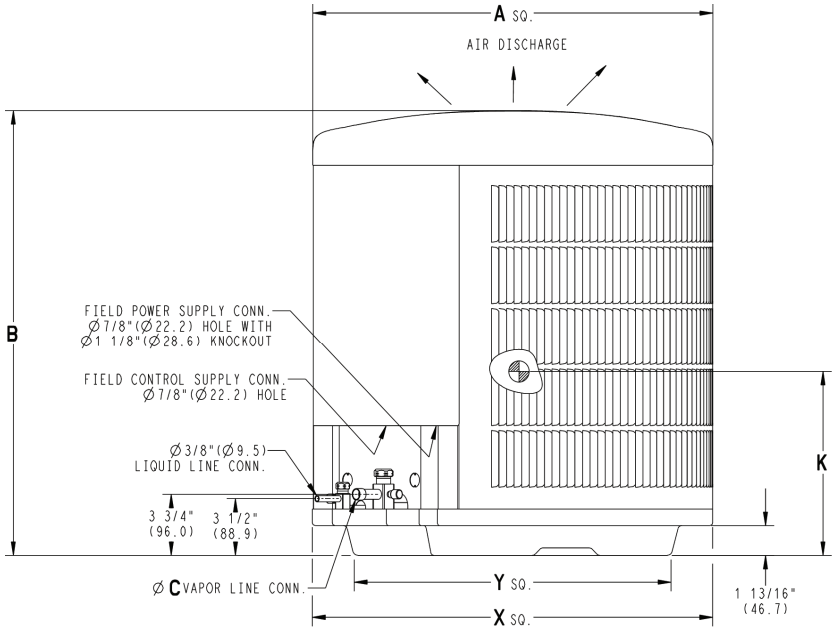

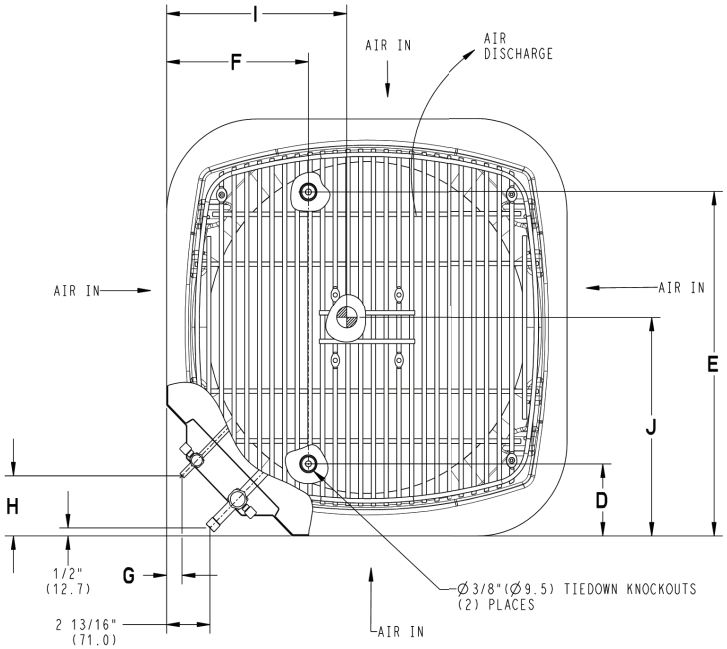

UNIT SIZE	"X" MINIMUM GROUND MOUNTING PAD APPLICATION DIMENSIONS		"Y" MINIMUM ROOF-TOP MOUNTING PAD APPLICATION DIMENSIONS	
-	23 1/8	587.3	17 7/8	454.6
-	25 3/4	654.0	20 7/16	518.5
18,24,30	31 3/16	792.5	22 15/16	583.2
36,42,48,60	35	889.0	26 3/4	679.7

NOTE: ALL DIMENSIONS IN INCH (MM)

U.S. ECCN: Not Subject to Regulation (N.S.R.)

SD4985-4 REV. E

CLEARANCES

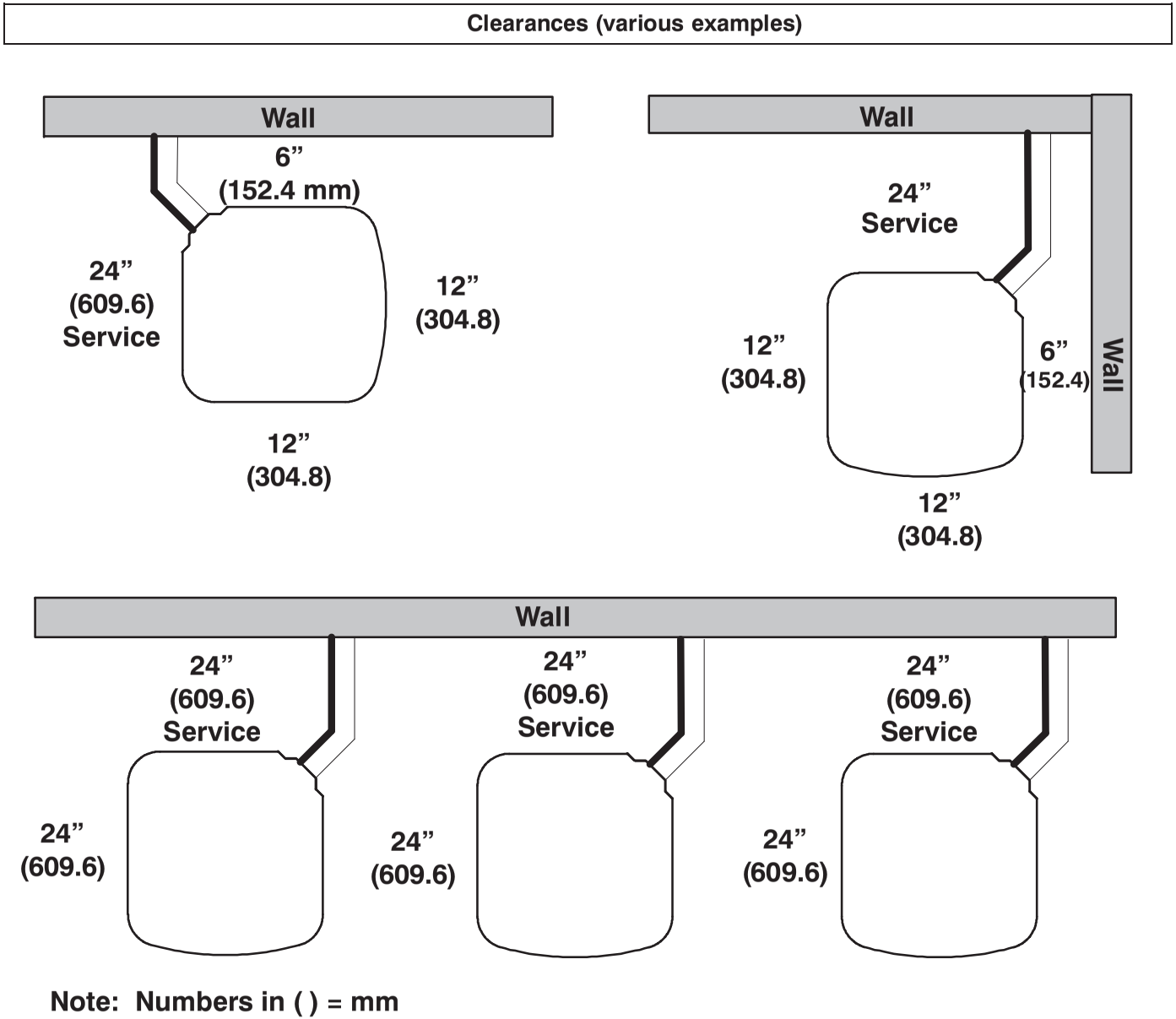

IMPORTANT: When installing multiple units in an alcove, roof well, or partially enclosed area, ensure there is adequate ventilation to prevent re-circulation of discharge air.

TESTED AHRI COMBINATION RATINGS

NOTE: Ratings contained in this document are subject to change at any time.

For AHRI ratings certificates, please refer to the AHRI directory www.ahridirectory.org
Additional ratings and system combinations can be accessed via the Carrier database at:
http://cactaxcredits.info/carrier-ratings/ac_ratings_srch.php
Equipment performance calculator can be accessed at: http://rpmob.wrightsoft.com/

Model Number	Indoor Coil Model Number	Furnace Model Number	Cooling Capacity	EER	SEER
24ANB618A**30	CNPV*1917A**+TDR		18,000	12.0	14.5
24ANB624A**30	CNPV*3117A**+TDR		23,800	12.0	14.5
24ANB630A**30	CNPV*3117A**+TDR		28,400	12.0	14.5
24ANB636A**30	CNPV*3717A**+TDR		34,400	12.0	14.5
24ANB642A**30	CNPV*4324A**+TDR		42,000	12.0	14.5
24ANB648A**30	CNPV*6124A**+TDR		46,500	12.5	14.5
24ANB660A**30	CNPV*6124A**+TDR		55,000	12.5	14.5

***** AHRI = Air Conditioning, Heating & Refrigeration Institute
EER — Energy Efficiency Ratio
SEER — Seasonal Energy Efficiency Ratio
TDR — Time−Delay Relay. In most cases, only 1 method should be used to achieve TDR function. Using more than 1 method in a system may cause degradation in performance. Use either the accessory Time−Delay Relay KAATD0101TDR or a furnace equipped with TDR. Most Carrier furnaces are equipped with TDR.

NOTES:
1. Ratings are net values reflecting the effects of circulating fan motor heat. Supplemental electric heat is not included.
2. Tested outdoor/indoor combinations have been tested in accordance with DOE test procedures for central air conditioners. Ratings for other combinations are determined under DOE computer simulation procedures.
3. Determine actual CFM values obtainable for your system by referring to fan performance data in fan coil or furnace coil literature.
4. Do not apply with capillary tube coils as performance and reliability are affected.

DETAILED COOLING CAPACITIES#

EVAPORATOR AIR		CONDENSER ENTERING AIR TEMPERATURES °F (°C)																	
		75 (23.9)			85 (29.4)			95 (35)			105 (40.6)			115 (46.1)			125 (51.7)		
CFM	EWB °F (°C)	Capacity MBtuh		Total Sys. KW**	Capacity MBtuh		Total Sys. KW**	Capacity MBtuh		Total Sys. KW**	Capacity MBtuh		Total Sys. KW**	Capacity MBtuh		Total Sys. KW**	Capacity MBtuh		Total Sys. KW**
		Total	Sens‡		Total	Sens‡		Total	Sens‡		Total	Sens‡		Total	Sens‡		Total	Sens‡	
24ANB618A30 Outdoor Section With CNPV*1917A**+TDR Indoor Section**																			
525	57 (13.9)	21.63	10.95	1.12	20.61	10.57	1.26	19.54	10.18	1.41	18.41	9.76	1.58	17.21	9.34	1.77	15.94	8.89	1.97
	62 (16.7)	19.55	13.28	1.12	18.63	12.90	1.26	17.65	12.51	1.41	16.62	12.09	1.57	15.53	11.66	1.75	14.37	11.21	1.96
	63 (17.2)††	18.05	12.76	1.12	17.20	12.38	1.26	16.30	11.98	1.40	15.33	11.57	1.56	14.31	11.14	1.75	13.23	10.68	1.96
	67 (19.4)	17.71	15.58	1.12	16.88	15.21	1.25	16.01	14.81	1.40	15.10	14.39	1.56	14.22	14.22	1.75	13.36	13.36	1.96
	72 (22.2)	17.06	17.06	1.12	16.42	16.42	1.25	15.73	15.73	1.40	14.99	14.99	1.56	14.20	14.20	1.75	13.33	13.33	1.96
600	57 (13.9)	22.11	11.53	1.14	21.03	11.14	1.29	19.90	10.74	1.44	18.72	10.32	1.61	17.48	9.88	1.79	16.16	9.43	2.00
	62 (16.7)	19.99	14.19	1.14	19.02	13.81	1.28	18.00	13.40	1.43	16.92	12.98	1.60	15.79	12.54	1.78	14.58	12.08	1.99
	63 (17.2)††	18.48	13.61	1.14	17.58	13.22	1.28	16.63	12.82	1.43	15.63	12.39	1.59	14.56	11.95	1.78	13.44	11.49	1.98
	67 (19.4)	18.18	16.82	1.14	17.33	16.42	1.28	16.46	16.46	1.43	15.67	15.67	1.59	14.81	14.81	1.78	13.88	13.88	1.99
	72 (22.2)	17.88	17.88	1.14	17.18	17.18	1.28	16.44	16.44	1.43	15.64	15.64	1.59	14.79	14.79	1.78	13.86	13.86	1.99
675	57 (13.9)	22.46	12.08	1.17	21.34	11.68	1.32	20.17	11.27	1.47	18.95	10.85	1.64	17.66	10.41	1.82	16.31	9.95	2.03
	62 (16.7)	20.34	15.07	1.17	19.32	14.67	1.31	18.26	14.26	1.46	17.15	13.83	1.63	15.98	13.38	1.81	14.75	12.91	2.02
	63 (17.2)††	18.80	14.42	1.17	17.86	14.03	1.31	16.88	13.62	1.46	15.84	13.18	1.62	14.75	12.73	1.80	13.60	12.25	2.01
	67 (19.4)	18.61	18.52	1.17	17.85	17.85	1.31	17.05	17.05	1.46	16.21	16.21	1.62	15.30	15.30	1.80	14.32	14.32	2.01
	72 (22.2)	18.57	18.57	1.17	17.82	17.82	1.31	17.03	17.03	1.46	16.18	16.18	1.62	15.27	15.27	1.80	14.30	14.30	2.01

EVAPORATOR AIR		CONDENSER ENTERING AIR TEMPERATURES °F (°C)																	
		75 (23.9)			85 (29.4)			95 (35)			105 (40.6)			115 (46.1)			125 (51.7)		
CFM	EWB °F (°C)	Capacity MBtuh		Total Sys. KW**	Capacity MBtuh		Total Sys. KW**	Capacity MBtuh		Total Sys. KW**	Capacity MBtuh		Total Sys. KW**	Capacity MBtuh		Total Sys. KW**	Capacity MBtuh		Total Sys. KW**
		Total	Sens‡		Total	Sens‡		Total	Sens‡		Total	Sens‡		Total	Sens‡		Total	Sens‡	
24ANB624A30 Outdoor Section With CNPV*3117A**+TDR Indoor Section**																			
700	57 (13.9)	28.62	14.37	1.54	27.23	13.51	1.73	25.76	12.66	1.94	24.22	11.82	2.16	22.61	10.99	2.41	20.92	10.17	2.69
	62 (16.7)	26.01	17.59	1.54	24.72	16.64	1.73	23.39	15.71	1.93	21.99	14.77	2.15	20.51	13.85	2.40	18.97	12.93	2.68
	63 (17.2)††	24.07	16.91	1.55	22.89	15.98	1.73	21.64	15.06	1.92	20.33	14.14	2.14	18.96	13.23	2.39	17.51	12.32	2.67
	67 (19.4)	23.66	20.76	1.55	22.51	19.72	1.73	21.32	18.69	1.92	20.11	20.07	2.14	18.99	18.99	2.39	17.81	17.81	2.67
	72 (22.2)	23.01	23.01	1.55	22.09	22.09	1.73	21.11	21.11	1.92	20.07	20.07	2.14	18.96	18.96	2.39	17.78	17.78	2.67
800	57 (13.9)	29.14	15.12	1.58	27.70	14.25	1.77	26.17	13.37	1.98	24.57	12.50	2.20	22.90	11.64	2.45	21.16	10.79	2.73
	62 (16.7)	26.54	18.82	1.58	25.20	17.83	1.77	23.80	16.84	1.97	22.34	15.87	2.19	20.81	14.90	2.43	19.21	13.94	2.72
	63 (17.2)††	24.59	18.05	1.58	23.34	17.08	1.76	22.05	16.12	1.96	20.69	15.16	2.18	19.26	14.21	2.43	17.77	13.26	2.71
	67 (19.4)	24.26	22.42	1.58	23.11	23.01	1.76	22.04	22.04	1.96	20.92	20.92	2.18	19.73	19.73	2.43	18.47	18.47	2.71
	72 (22.2)	24.05	24.05	1.58	23.05	23.05	1.76	22.00	22.00	1.96	20.89	20.89	2.18	19.71	19.71	2.43	18.45	18.45	2.71
900	57 (13.9)	29.51	15.85	1.62	28.04	14.95	1.81	26.46	14.05	2.02	24.81	13.15	2.24	23.10	12.27	2.49	21.31	11.39	2.77
	62 (16.7)	26.93	20.00	1.62	25.54	18.97	1.80	24.10	17.94	2.01	22.60	16.92	2.23	21.03	15.91	2.47	19.40	14.90	2.75
	63 (17.2)††	24.97	19.15	1.62	23.69	18.14	1.80	22.35	17.14	2.00	20.95	16.14	2.22	19.49	15.15	2.47	17.97	14.15	2.75
	67 (19.4)	24.96	24.96	1.62	23.89	23.89	1.80	22.77	22.77	2.00	21.59	21.59	2.22	20.34	20.34	2.47	19.00	19.00	2.75
	72 (22.2)	24.92	24.92	1.62	23.86	23.86	1.80	22.74	22.74	2.00	21.56	21.56	2.22	20.31	20.31	2.47	18.98	18.98	2.75

See notes on pg. 15

DETAILED COOLING CAPACITIES# CONTINUED

EVAPORATOR AIR		CONDENSER ENTERING AIR TEMPERATURES °F (°C)																	
		75 (23.9)			85 (29.4)			95 (35)			105 (40.6)			115 (46.1)			125 (51.7)		
CFM	EWB °F (°C)	Capacity MBtuh		Total Sys. KW**	Capacity MBtuh		Total Sys. KW**	Capacity MBtuh		Total Sys. KW**	Capacity MBtuh		Total Sys. KW**	Capacity MBtuh		Total Sys. KW**	Capacity MBtuh		Total Sys. KW**
		Total	Sens‡		Total	Sens‡		Total	Sens‡		Total	Sens‡		Total	Sens‡		Total	Sens‡	
24ANB630A30 Outdoor Section With CNPV*3117A**+TDR Indoor Section**																			
900	57 (13.9)	34.12	17.11	1.85	32.53	16.70	2.08	30.88	16.26	2.34	29.15	15.80	2.64	27.28	15.28	2.99	25.26	14.70	3.40
	62 (16.7)	31.02	21.15	1.86	29.57	20.76	2.09	28.06	20.35	2.35	26.46	19.90	2.65	24.74	19.40	3.00	22.87	18.83	3.40
	63 (17.2)††	28.79	20.32	1.87	27.44	19.93	2.09	26.03	19.51	2.35	24.52	19.04	2.65	22.89	18.52	3.00	21.12	17.93	3.40
	67 (19.4)	28.37	25.13	1.87	27.08	24.75	2.09	25.78	25.70	2.35	24.55	24.55	2.65	23.21	23.21	3.00	21.75	21.75	3.40
	72 (22.2)	27.93	27.93	1.87	26.86	26.86	2.09	25.73	25.73	2.35	24.51	24.51	2.65	23.18	23.18	3.00	21.72	21.72	3.40
1000	57 (13.9)	34.56	17.82	1.89	32.92	17.41	2.11	31.23	16.97	2.38	29.45	16.51	2.68	27.53	15.99	3.03	25.46	15.41	3.44
	62 (16.7)	31.45	22.30	1.90	29.95	21.91	2.12	28.40	21.50	2.38	26.76	21.05	2.68	25.00	20.54	3.03	23.09	19.97	3.44
	63 (17.2)††	29.21	21.39	1.90	27.81	21.00	2.13	26.36	20.57	2.39	24.81	20.10	2.69	23.15	19.58	3.04	21.35	18.98	3.44
	67 (19.4)	28.93	28.68	1.90	27.74	27.74	2.13	26.55	26.55	2.39	25.27	25.27	2.69	23.88	23.88	3.03	22.35	22.35	3.44
	72 (22.2)	28.84	28.84	1.90	27.70	27.70	2.13	26.52	26.52	2.39	25.23	25.23	2.69	23.85	23.85	3.03	22.32	22.32	3.44
1125	57 (13.9)	34.98	18.68	1.93	33.28	18.26	2.16	31.54	17.83	2.42	29.70	17.36	2.73	27.74	16.84	3.08	25.63	16.26	3.49
	62 (16.7)	31.86	23.68	1.94	30.31	23.29	2.17	28.73	22.88	2.43	27.04	22.43	2.73	25.25	21.91	3.08	23.32	21.32	3.49
	63 (17.2)††	29.61	22.67	1.94	28.18	22.28	2.17	26.68	21.85	2.43	25.10	21.38	2.73	23.41	20.84	3.08	21.59	20.22	3.49
	67 (19.4)	29.84	29.84	1.94	28.63	28.63	2.17	27.38	27.38	2.43	26.02	26.02	2.73	24.56	24.56	3.08	22.96	22.96	3.49
	72 (22.2)	29.80	29.80	1.94	28.59	28.59	2.17	27.34	27.34	2.43	25.99	25.99	2.73	24.53	24.53	3.08	22.93	22.93	3.49

EVAPORATOR AIR		CONDENSER ENTERING AIR TEMPERATURES °F (°C)																	
		75 (23.9)			85 (29.4)			95 (35)			105 (40.6)			115 (46.1)			125 (51.7)		
CFM	EWB °F (°C)	Capacity MBtuh		Total Sys. KW**	Capacity MBtuh		Total Sys. KW**	Capacity MBtuh		Total Sys. KW**	Capacity MBtuh		Total Sys. KW**	Capacity MBtuh		Total Sys. KW**	Capacity MBtuh		Total Sys. KW**
		Total	Sens‡		Total	Sens‡		Total	Sens‡		Total	Sens‡		Total	Sens‡		Total	Sens‡	
24ANB636A30 Outdoor Section With CNPV*3717A**+TDR Indoor Section**																			
1050	57 (13.9)	41.79	21.33	2.30	39.58	20.21	2.55	37.29	19.10	2.83	34.92	17.98	3.14	32.46	16.86	3.51	29.88	15.74	3.93
	62 (16.7)	37.98	26.27	2.28	35.95	25.04	2.53	33.86	23.81	2.81	31.68	22.58	3.12	29.42	21.34	3.49	27.06	20.10	3.92
	63 (17.2)††	35.23	25.25	2.27	33.34	24.04	2.52	31.38	22.83	2.79	29.34	21.61	3.11	27.22	20.39	3.48	25.00	19.15	3.91
	67 (19.4)	34.66	31.16	2.26	32.83	29.80	2.51	30.98	28.42	2.79	29.22	29.22	3.11	27.47	27.47	3.48	25.61	25.61	3.91
	72 (22.2)	33.97	33.97	2.26	32.44	32.44	2.51	30.85	30.85	2.79	29.18	29.18	3.11	27.42	27.42	3.48	25.57	25.57	3.91
1200	57 (13.9)	42.51	22.47	2.36	40.20	21.32	2.61	37.84	20.17	2.89	35.39	19.02	3.20	32.84	17.87	3.57	30.20	16.71	3.99
	62 (16.7)	38.68	28.11	2.34	36.57	26.83	2.59	34.40	25.54	2.87	32.16	24.26	3.18	29.82	22.96	3.55	27.40	21.67	3.97
	63 (17.2)††	35.91	26.96	2.33	33.94	25.70	2.58	31.91	24.44	2.85	29.80	23.17	3.17	27.61	21.89	3.54	25.35	20.60	3.97
	67 (19.4)	35.54	35.26	2.32	33.84	33.84	2.58	32.14	32.14	2.85	30.35	30.35	3.17	28.49	28.49	3.54	26.52	26.52	3.97
	72 (22.2)	35.43	35.43	2.32	33.79	33.79	2.58	32.09	32.09	2.85	30.31	30.31	3.17	28.45	28.45	3.54	26.48	26.48	3.97
1350	57 (13.9)	43.03	23.57	2.42	40.66	22.38	2.67	38.23	21.20	2.95	35.70	20.02	3.26	33.10	18.84	3.63	30.39	17.65	4.04
	62 (16.7)	39.19	29.87	2.40	37.03	28.54	2.65	34.81	27.21	2.93	32.50	25.87	3.24	30.12	24.52	3.61	27.67	23.16	4.03
	63 (17.2)††	36.41	28.60	2.39	34.39	27.29	2.64	32.31	25.98	2.91	30.15	24.66	3.23	27.92	23.33	3.60	25.62	21.97	4.03
	67 (19.4)	36.68	36.68	2.39	34.95	34.95	2.64	33.16	33.16	2.92	31.28	31.28	3.24	29.32	29.32	3.60	27.25	27.25	4.03
	72 (22.2)	36.63	36.63	2.39	34.90	34.90	2.64	33.11	33.11	2.92	31.23	31.23	3.24	29.28	29.28	3.60	27.21	27.21	4.03

See notes on pg. 15

DETAILED COOLING CAPACITIES# CONTINUED

EVAPORATOR AIR		CONDENSER ENTERING AIR TEMPERATURES °F (°C)																	
		75 (23.9)			85 (29.4)			95 (35)			105 (40.6)			115 (46.1)			125 (51.7)		
CFM	EWB °F (°C)	Capacity MBtuh		Total Sys. KW**	Capacity MBtuh		Total Sys. KW**	Capacity MBtuh		Total Sys. KW**	Capacity MBtuh		Total Sys. KW**	Capacity MBtuh		Total Sys. KW**	Capacity MBtuh		Total Sys. KW**
		Total	Sens‡		Total	Sens‡		Total	Sens‡		Total	Sens‡		Total	Sens‡		Total	Sens‡	
24ANB642A**30 Outdoor Section With CNPV*4324A**+TDR Indoor Section																			
1225	57 (13.9)	49.34	24.70	2.66	47.47	24.08	3.01	45.41	23.40	3.42	43.15	22.67	3.88	40.71	21.89	4.39	38.06	21.06	4.98
	62 (16.7)	44.95	30.44	2.64	43.25	29.86	2.99	41.39	29.23	3.38	39.33	28.54	3.84	37.11	27.79	4.36	34.71	26.99	4.94
	63 (17.2)††	41.76	29.29	2.63	40.20	28.71	2.97	38.47	28.07	3.36	36.56	27.37	3.82	34.50	26.62	4.33	32.25	25.80	4.91
	67 (19.4)	41.12	36.11	2.63	39.63	35.56	2.97	38.01	34.93	3.36	36.38	36.38	3.82	34.75	34.75	4.33	32.94	32.94	4.92
	72 (22.2)	40.25	40.25	2.62	39.10	39.10	2.96	37.79	37.79	3.36	36.33	36.33	3.82	34.70	34.70	4.33	32.90	32.90	4.92
1400	57 (13.9)	50.16	25.99	2.73	48.18	25.36	3.08	46.03	24.68	3.49	43.68	23.95	3.95	41.13	23.16	4.47	38.39	22.32	5.06
	62 (16.7)	45.74	32.51	2.71	43.96	31.94	3.06	42.00	31.30	3.46	39.87	30.61	3.92	37.56	29.85	4.43	35.08	29.04	5.02
	63 (17.2)††	42.55	31.23	2.70	40.90	30.64	3.04	39.08	30.00	3.44	37.10	29.29	3.89	34.95	28.52	4.41	32.65	27.69	4.99
	67 (19.4)	42.11	38.86	2.70	40.72	40.72	3.04	39.30	39.30	3.44	37.71	37.71	3.90	35.95	35.95	4.42	34.01	34.01	5.01
	72 (22.2)	41.92	41.92	2.70	40.66	40.66	3.04	39.24	39.24	3.44	37.65	37.65	3.90	35.90	35.90	4.42	33.97	33.97	5.01
1575	57 (13.9)	50.74	27.21	2.80	48.70	26.58	3.16	46.46	25.90	3.56	44.03	25.16	4.03	41.41	24.38	4.55	38.60	23.54	5.14
	62 (16.7)	46.32	34.50	2.78	44.48	33.92	3.13	42.46	33.29	3.53	40.26	32.59	3.99	37.89	31.82	4.51	35.38	30.98	5.10
	63 (17.2)††	43.12	33.07	2.77	41.42	32.49	3.11	39.54	31.84	3.51	37.50	31.12	3.97	35.30	30.34	4.48	32.96	29.47	5.07
	67 (19.4)	43.35	43.35	2.77	42.00	42.00	3.11	40.47	40.47	3.52	38.78	38.78	3.98	36.91	36.91	4.50	34.86	34.86	5.09
	72 (22.2)	43.29	43.29	2.77	41.94	41.94	3.11	40.42	40.42	3.52	38.73	38.73	3.98	36.87	36.87	4.50	34.82	34.82	5.09

EVAPORATOR AIR		CONDENSER ENTERING AIR TEMPERATURES °F (°C)																	
		75 (23.9)			85 (29.4)			95 (35)			105 (40.6)			115 (46.1)			125 (51.7)		
CFM	EWB °F (°C)	Capacity MBtuh		Total Sys. KW**	Capacity MBtuh		Total Sys. KW**	Capacity MBtuh		Total Sys. KW**	Capacity MBtuh		Total Sys. KW**	Capacity MBtuh		Total Sys. KW**	Capacity MBtuh		Total Sys. KW**
		Total	Sens‡		Total	Sens‡		Total	Sens‡		Total	Sens‡		Total	Sens‡		Total	Sens‡	
24ANB648A**30 Outdoor Section With CNPV*6124A**+TDR Indoor Section																			
1400	57 (13.9)	56.26	27.99	2.63	53.43	27.01	3.06	50.50	26.01	3.49	47.48	24.98	3.94	44.30	23.92	4.41	40.93	22.81	4.90
	62 (16.7)	50.89	34.43	2.79	48.38	33.47	3.18	45.78	32.48	3.58	43.08	31.47	4.00	40.25	30.42	4.44	37.23	29.31	4.92
	63 (17.2)††	47.07	33.02	2.89	44.78	32.08	3.26	42.40	31.11	3.64	39.93	30.12	4.03	37.32	29.07	4.46	34.55	27.98	4.92
	67 (19.4)	46.35	40.80	2.90	44.17	39.83	3.27	41.98	41.83	3.64	39.98	39.98	4.03	37.84	37.84	4.45	35.52	35.52	4.92
	72 (22.2)	45.55	45.55	2.92	43.76	43.76	3.27	41.89	41.89	3.64	39.91	39.91	4.03	37.78	37.78	4.45	35.47	35.47	4.92
1600	57 (13.9)	57.28	29.51	2.66	54.30	28.50	3.10	51.24	27.48	3.54	48.08	26.43	4.00	44.78	25.35	4.47	41.29	24.22	4.97
	62 (16.7)	51.86	36.85	2.83	49.21	35.85	3.23	46.50	34.85	3.64	43.69	33.81	4.06	40.75	32.72	4.51	37.65	31.58	4.99
	63 (17.2)††	47.99	35.27	2.94	45.57	34.29	3.31	43.10	33.30	3.70	40.52	32.28	4.10	37.82	31.20	4.53	34.97	30.07	5.00
	67 (19.4)	47.61	47.41	2.94	45.63	45.63	3.31	43.61	43.61	3.69	41.47	41.47	4.09	39.16	39.16	4.52	36.67	36.67	5.00
	72 (22.2)	47.50	47.50	2.94	45.56	45.56	3.31	43.54	43.54	3.69	41.41	41.41	4.09	39.11	39.11	4.52	36.63	36.63	5.00
1800	57 (13.9)	58.02	30.95	2.70	54.93	29.93	3.15	51.76	28.88	3.60	48.49	27.82	4.06	45.10	26.72	4.54	41.51	25.58	5.05
	62 (16.7)	52.58	39.16	2.87	49.84	38.15	3.28	47.04	37.11	3.70	44.14	36.04	4.13	41.13	34.92	4.58	37.98	33.72	5.07
	63 (17.2)††	48.67	37.42	2.99	46.18	36.42	3.37	43.62	35.40	3.76	40.96	34.34	4.17	38.21	33.22	4.60	35.32	31.99	5.08
	67 (19.4)	49.21	49.21	2.96	47.13	47.13	3.35	44.96	44.96	3.74	42.67	42.67	4.15	40.23	40.23	4.59	37.59	37.59	5.07
	72 (22.2)	49.14	49.14	2.97	47.06	47.06	3.35	44.90	44.90	3.74	42.61	42.61	4.15	40.18	40.18	4.59	37.55	37.55	5.07

See notes on pg. 15

DETAILED COOLING CAPACITIES# CONTINUED

EVAPORATOR AIR		CONDENSER ENTERING AIR TEMPERATURES °F (°C)																	
		75 (23.9)			85 (29.4)			95 (35)			105 (40.6)			115 (46.1)			125 (51.7)		
CFM	EWB °F (°C)	Capacity MBtuh		Total Sys. KW**	Capacity MBtuh		Total Sys. KW**	Capacity MBtuh		Total Sys. KW**	Capacity MBtuh		Total Sys. KW**	Capacity MBtuh		Total Sys. KW**	Capacity MBtuh		Total Sys. KW**
		Total	Sens‡		Total	Sens‡		Total	Sens‡		Total	Sens‡		Total	Sens‡		Total	Sens‡	
24ANB660A**30 Outdoor Section With CNPV*6124A**+TDR Indoor Section																			
1750	57 (13.9)	66.03	33.71	3.54	62.86	32.49	3.92	59.49	31.24	4.33	55.92	29.95	4.78	52.09	28.60	5.29	47.94	27.18	5.86
	62 (16.7)	60.16	42.01	3.52	57.34	40.81	3.90	54.33	39.55	4.30	51.12	38.25	4.75	47.67	36.88	5.26	43.93	35.42	5.83
	63 (17.2)††	55.92	40.36	3.52	53.34	39.17	3.88	50.59	37.93	4.28	47.64	36.64	4.73	44.45	35.28	5.23	41.00	33.82	5.81
	67 (19.4)	55.30	50.14	3.52	52.96	52.74	3.88	50.72	50.72	4.28	48.29	48.29	4.73	45.62	45.62	5.24	42.65	42.65	5.83
	72 (22.2)	54.87	54.87	3.51	52.85	52.85	3.88	50.64	50.64	4.28	48.23	48.23	4.73	45.56	45.56	5.24	42.60	42.60	5.83
2000	57 (13.9)	66.94	35.49	3.63	63.63	34.26	4.01	60.13	32.98	4.43	56.41	31.66	4.88	52.46	30.30	5.39	48.19	28.86	5.96
	62 (16.7)	61.07	44.91	3.62	58.11	43.67	3.99	55.00	42.39	4.40	51.67	41.04	4.85	48.13	39.62	5.36	44.32	38.08	5.93
	63 (17.2)††	56.81	43.05	3.61	54.12	41.83	3.98	51.26	40.56	4.38	48.20	39.22	4.83	44.93	37.80	5.34	41.42	36.25	5.91
	67 (19.4)	57.02	57.02	3.61	54.82	54.82	3.98	52.43	52.43	4.39	49.82	49.82	4.84	46.96	46.96	5.35	43.79	43.79	5.93
	72 (22.2)	56.95	56.95	3.61	54.75	54.75	3.98	52.36	52.36	4.39	49.76	49.76	4.84	46.90	46.90	5.35	43.74	43.74	5.93
2250	57 (13.9)	67.58	37.19	3.73	64.15	35.93	4.11	60.53	34.64	4.53	56.72	33.31	4.98	52.67	31.92	5.49	48.30	30.47	6.06
	62 (16.7)	61.73	47.68	3.71	58.69	46.41	4.09	55.48	45.08	4.50	52.08	43.68	4.95	48.50	42.18	5.46	44.73	44.51	6.03
	63 (17.2)††	57.47	45.62	3.71	54.69	44.36	4.08	51.76	43.04	4.48	48.64	41.65	4.93	45.33	40.11	5.43	41.94	41.94	6.01
	67 (19.4)	58.71	58.71	3.71	56.35	56.35	4.08	53.80	53.80	4.49	51.03	51.03	4.94	48.01	48.01	5.45	44.66	44.66	6.03
	72 (22.2)	58.64	58.64	3.71	56.29	56.29	4.08	53.74	53.74	4.49	50.98	50.98	4.94	47.96	47.96	5.45	44.62	44.62	6.03

† Total and sensible capacities are net capacities. Blower motor heat has been subtracted.

‡ Sensible capacities shown are based on 80°F (27°C) entering air at the indoor coil. For sensible capacities at other than 80°F (27°C), deduct 835 Btuh (245 kW) per 1000 CFM (480 L/S) of indoor coil air for each degree below 80°F (27°C), or add 835 Btuh (245 kW) per 1000 CFM (480 L/S) of indoor coil air per degree above 80°F (27°C).

Detailed cooling capacities are based on indoor and outdoor unit at the same elevation per AHRI standard 210/240–2008. If additional tubing length and/or indoor unit is located above outdoor unit, a slight variation in capacity may occur.

** System kw is total of indoor and outdoor unit kilowatts.

†† At TVA rating indoor condition (75°F edb/63°F ewb). All other indoor air temperatures are at 80°F edb.

NOTE: When the required data falls between the published data, interpolation may be performed. Extrapolation is not an acceptable practice.

EWB — Entering Wet Bulb

CONDENSER ONLY RATINGS*

SST °F (°C)		CONDENSER ENTERING AIR TEMPERATURES °F (°C)							
		55 (12.78)	65 (18.33)	75 (23.89)	85 (29.44)	95 (35.0)	105 (40.56)	115 (46.11)	125 (51.67)
24ANB618A30**									
30 (−1.11)	TCG	14.00	13.50	13.00	12.40	11.80	11.00	10.20	9.30
	SDT	65.20	74.80	84.40	94.00	103.60	113.10	122.60	132.00
	KW	0.66	0.78	0.91	1.04	1.20	1.37	1.58	1.83
35 (1.67)	TCG	15.60	15.00	14.50	13.80	13.10	12.30	11.40	10.40
	SDT	66.30	75.90	85.40	94.90	104.40	113.80	123.20	132.70
	KW	0.65	0.77	0.90	1.04	1.20	1.38	1.58	1.83
40 (4.44)	TCG	17.30	16.70	16.10	15.30	14.60	13.70	12.70	11.70
	SDT	67.50	76.90	86.40	95.80	105.20	114.60	124.00	133.30
	KW	0.64	0.77	0.90	1.05	1.20	1.38	1.59	1.83
45 (7.22)	TCG	19.10	18.50	17.70	17.00	16.10	15.20	14.20	13.00
	SDT	68.70	78.00	87.40	96.70	106.10	115.40	124.80	134.10
	KW	0.63	0.77	0.90	1.05	1.21	1.39	1.59	1.83
50 (10.0)	TCG	21.10	20.30	19.50	18.70	17.80	16.70	15.70	14.50
	SDT	69.90	79.20	88.40	97.70	107.00	116.30	125.60	134.80
	KW	0.63	0.76	0.90	1.05	1.21	1.39	1.60	1.84
55 (12.78)	TCG	23.10	22.30	21.50	20.50	19.50	18.40	17.20	15.90
	SDT	71.20	80.40	89.60	98.80	108.00	117.20	126.50	135.60
	KW	0.62	0.76	0.91	1.06	1.22	1.40	1.61	1.85
24ANB624A30**									
30 (−1.11)	TCG	20.10	19.40	18.50	17.60	16.70	15.60	14.40	13.10
	SDT	66.10	75.80	85.30	94.90	104.40	114.00	123.40	132.80
	KW	0.97	1.13	1.29	1.46	1.65	1.87	2.13	2.42
35 (1.67)	TCG	22.30	21.40	20.50	19.50	18.50	17.30	16.00	14.70
	SDT	67.20	76.80	86.30	95.80	105.30	114.70	124.10	133.50
	KW	0.96	1.12	1.29	1.46	1.66	1.87	2.13	2.42
40 (4.44)	TCG	24.60	23.70	22.70	21.60	20.40	19.10	17.80	16.30
	SDT	68.40	77.90	87.30	96.70	106.10	115.50	124.80	134.10
	KW	0.95	1.12	1.29	1.46	1.66	1.88	2.13	2.42
45 (7.22)	TCG	27.10	26.00	24.90	23.70	22.40	21.10	19.60	18.00
	SDT	69.60	79.00	88.30	97.60	107.00	116.30	125.60	134.90
	KW	0.94	1.11	1.29	1.47	1.67	1.89	2.14	2.43
50 (10.0)	TCG	29.70	28.60	27.30	26.00	24.60	23.10	21.50	19.80
	SDT	70.80	80.10	89.40	98.70	107.90	117.20	126.40	135.60
	KW	0.93	1.11	1.29	1.47	1.67	1.90	2.15	2.43
55 (12.78)	TCG	32.50	31.20	29.90	28.40	26.90	25.30	23.50	21.70
	SDT	72.10	81.30	90.50	99.70	108.90	118.10	127.30	136.40
	KW	0.93	1.11	1.29	1.48	1.69	1.91	2.16	2.45
24ANB630A30**									
30 (−1.11)	TCG	23.80	22.90	21.90	20.90	19.80	18.50	17.00	15.30
	SDT	68.10	77.50	87.00	96.40	105.80	115.10	124.40	133.60
	KW	1.14	1.32	1.52	1.74	1.99	2.29	2.63	3.02
35 (1.67)	TCG	26.30	25.30	24.30	23.10	21.90	20.50	19.00	17.20
	SDT	69.40	78.70	88.10	97.40	106.70	116.00	125.30	134.40
	KW	1.15	1.33	1.52	1.75	2.00	2.30	2.64	3.03
40 (4.44)	TCG	29.00	27.90	26.80	25.50	24.20	22.80	21.10	19.20
	SDT	70.70	79.90	89.20	98.50	107.70	117.00	126.20	135.30
	KW	1.16	1.33	1.53	1.75	2.01	2.31	2.65	3.05
45 (7.22)	TCG	31.90	30.70	29.40	28.10	26.70	25.10	23.40	21.40
	SDT	72.00	81.20	90.40	99.60	108.80	118.00	127.20	136.30
	KW	1.16	1.33	1.53	1.76	2.01	2.31	2.66	3.06
50 (10.0)	TCG	35.00	33.60	32.30	30.80	29.30	27.60	25.70	23.60
	SDT	73.50	82.50	91.60	100.80	110.00	119.20	128.20	137.20
	KW	1.16	1.33	1.53	1.76	2.02	2.32	2.67	3.07
55 (12.78)	TCG	38.30	36.80	35.30	33.70	32.00	30.20	28.20	26.00
	SDT	75.00	84.00	93.00	102.10	111.20	120.30	129.30	138.20
	KW	1.15	1.33	1.53	1.76	2.02	2.32	2.67	3.08

See notes on page 18

CONDENSER ONLY RATINGS* CONTINUED

SST °F (°C)		CONDENSER ENTERING AIR TEMPERATURES °F (°C)							
		55 (12.78)	65 (18.33)	75 (23.89)	85 (29.44)	95 (35.0)	105 (40.56)	115 (46.11)	125 (51.67)
24ANB636A30**									
30 (−1.11)	TCG	30.50	29.20	27.80	26.30	24.70	23.00	21.20	19.20
	SDT	69.50	78.70	87.90	97.20	106.60	115.90	125.20	134.50
	KW	1.41	1.62	1.85	2.10	2.37	2.69	3.07	3.51
35 (1.67)	TCG	33.70	32.20	30.70	29.10	27.40	25.50	23.60	21.50
	SDT	70.70	79.90	89.10	98.30	107.50	116.80	126.10	135.40
	KW	1.41	1.63	1.86	2.11	2.38	2.70	3.07	3.51
40 (4.44)	TCG	37.10	35.50	33.80	32.10	30.20	28.20	26.10	23.90
	SDT	72.10	81.20	90.30	99.50	108.60	117.80	127.10	136.30
	KW	1.42	1.64	1.87	2.12	2.40	2.71	3.08	3.52
45 (7.22)	TCG	40.80	39.00	37.20	35.30	33.20	31.10	28.80	26.40
	SDT	73.70	82.60	91.60	100.70	109.80	118.90	128.10	137.20
	KW	1.43	1.65	1.88	2.13	2.41	2.73	3.10	3.53
50 (10.0)	TCG	44.80	42.80	40.80	38.70	36.50	34.10	31.70	29.00
	SDT	75.30	84.10	93.10	102.00	111.00	120.10	129.10	138.10
	KW	1.45	1.67	1.90	2.15	2.43	2.75	3.12	3.54
55 (12.78)	TCG	48.90	46.80	44.60	42.30	39.90	37.40	34.70	31.80
	SDT	77.00	85.70	94.60	103.40	112.30	121.30	130.20	139.10
	KW	1.47	1.70	1.93	2.18	2.46	2.77	3.14	3.56
24ANB642A30**									
30 (−1.11)	TCG	33.00	32.30	31.40	30.30	28.90	27.40	25.60	23.70
	SDT	69.80	79.20	88.70	98.10	107.40	116.70	125.90	135.10
	KW	1.61	1.84	2.12	2.45	2.84	3.29	3.81	4.40
35 (1.67)	TCG	36.40	35.70	34.70	33.40	32.00	30.30	28.40	26.30
	SDT	71.20	80.60	89.90	99.20	108.40	117.70	126.80	136.00
	KW	1.62	1.86	2.14	2.47	2.86	3.31	3.83	4.42
40 (4.44)	TCG	40.10	39.30	38.20	36.80	35.20	33.40	31.40	29.10
	SDT	72.70	81.90	91.20	100.40	109.60	118.70	127.80	136.90
	KW	1.63	1.87	2.15	2.49	2.88	3.33	3.85	4.45
45 (7.22)	TCG	44.10	43.10	41.90	40.40	38.60	36.70	34.50	32.00
	SDT	74.20	83.30	92.50	101.60	110.80	119.90	128.90	137.90
	KW	1.64	1.88	2.17	2.51	2.91	3.36	3.88	4.48
50 (10.0)	TCG	48.30	47.20	45.80	44.20	42.30	40.10	37.70	35.00
	SDT	75.80	84.80	93.90	103.00	112.00	121.00	130.00	138.90
	KW	1.65	1.90	2.19	2.54	2.94	3.39	3.92	4.51
55 (12.78)	TCG	52.80	51.50	50.00	48.10	46.00	43.70	41.10	38.20
	SDT	77.40	86.40	95.40	104.40	113.40	122.30	131.20	140.00
	KW	1.67	1.92	2.22	2.57	2.97	3.43	3.96	4.55
24ANB648A30**									
30 (−1.11)	TCG	40.10	38.00	35.90	33.80	31.50	29.20	26.70	24.20
	SDT	67.60	77.00	86.40	95.80	105.10	114.50	123.80	133.10
	KW	1.97	2.26	2.54	2.83	3.13	3.46	3.84	4.29
35 (1.67)	TCG	44.40	42.00	39.70	37.30	34.80	32.30	29.60	26.80
	SDT	68.90	78.20	87.50	96.80	106.10	115.30	124.60	133.80
	KW	1.90	2.22	2.53	2.83	3.14	3.48	3.87	4.30
40 (4.44)	TCG	49.10	46.40	43.80	41.10	38.40	35.60	32.70	29.60
	SDT	70.30	79.40	88.60	97.80	107.00	116.30	125.40	134.60
	KW	1.80	2.15	2.49	2.81	3.14	3.50	3.89	4.32
45 (7.22)	TCG	54.20	51.20	48.20	45.20	42.20	39.20	36.00	32.60
	SDT	71.70	80.70	89.80	99.00	108.10	117.30	126.40	135.40
	KW	1.66	2.05	2.41	2.77	3.13	3.50	3.90	4.34
50 (10.0)	TCG	59.80	56.40	53.00	49.70	46.40	43.00	39.40	35.70
	SDT	73.20	82.10	91.20	100.20	109.30	118.30	127.30	136.30
	KW	1.47	1.90	2.31	2.70	3.09	3.48	3.90	4.35
55 (12.78)	TCG	65.80	62.00	58.30	54.50	50.80	47.00	43.10	39.00
	SDT	74.80	83.60	92.60	101.50	110.50	119.40	128.40	137.30
	KW	1.24	1.72	2.17	2.60	3.02	3.44	3.88	4.35

See notes on page 18

CONDENSER ONLY RATINGS* CONTINUED

SST °F (°C)		CONDENSER ENTERING AIR TEMPERATURES °F (°C)							
		55 (12.78)	65 (18.33)	75 (23.89)	85 (29.44)	95 (35.0)	105 (40.56)	115 (46.11)	125 (51.67)
24ANB660A30**									
30 (–1.11)	TCG	45.10	43.80	42.30	40.50	38.50	36.20	33.50	30.50
	SDT	69.00	78.40	87.70	97.10	106.40	115.60	124.80	134.00
	KW	2.22	2.52	2.83	3.17	3.56	4.00	4.53	5.15
35 (1.67)	TCG	50.00	48.40	46.70	44.70	42.50	40.00	37.10	33.80
	SDT	70.40	79.70	89.00	98.20	107.40	116.60	125.80	134.90
	KW	2.21	2.52	2.85	3.19	3.58	4.03	4.55	5.16
40 (4.44)	TCG	55.10	53.40	51.40	49.20	46.70	44.00	40.80	37.30
	SDT	71.90	81.10	90.20	99.40	108.50	117.60	126.70	135.70
	KW	2.21	2.53	2.86	3.21	3.61	4.05	4.57	5.18
45 (7.22)	TCG	60.70	58.60	56.40	54.00	51.20	48.20	44.80	41.00
	SDT	73.50	82.50	91.60	100.70	109.70	118.70	127.70	136.70
	KW	2.20	2.53	2.87	3.23	3.63	4.08	4.60	5.20
50 (10.0)	TCG	66.50	64.20	61.70	59.00	56.00	52.60	48.90	44.70
	SDT	75.10	84.00	93.00	102.00	111.00	119.90	128.80	137.60
	KW	2.19	2.53	2.89	3.26	3.66	4.11	4.63	5.22
55 (12.78)	TCG	72.80	70.10	67.30	64.20	60.90	57.20	53.10	48.60
	SDT	76.80	85.70	94.50	103.40	112.30	121.10	129.90	138.60
	KW	2.18	2.54	2.90	3.28	3.69	4.15	4.66	5.25

* AHRI listing applies only to systems shown in Combination Ratings table.

KW – Outdoor Unit Kilowatts Only.

SDT – Saturated Temperature Leaving Compressor (°F/°C)

SST – Saturated Temperature Entering Compressor (°F)

TCG – Gross Cooling Capacity (1000 Btuh)

GUIDE SPECIFICATIONS
GENERAL

System Description

Outdoor-mounted, air-cooled, split-system air conditioner unit suitable for ground or rooftop installation. Unit consists of a hermetic compressor, an air-cooled coil, propeller-type condenser fan, and a control box. Unit will discharge supply air upward as shown on contract drawings. Unit will be used in a refrigeration circuit to match up to a packaged fan coil or coil unit.

Quality Assurance

— Unit will be rated in accordance with the latest edition of AHRI Standard 210.

— Unit will be certified for capacity and efficiency, and listed in the latest AHRI directory.

— Unit construction will comply with latest edition of ANSI/ ASHRAE and with NEC.

— Unit will be constructed in accordance with UL standards and will carry the UL label of approval. Unit will have c-UL approval.

— Unit cabinet will be capable of withstanding Federal Test Method Standard No. 141 (Method 6061) 500-hr salt spray test.

— Air-cooled condenser coils will be leak tested and pressure tested.

— Unit constructed in ISO9001 approved facility.

Delivery, Storage, and Handling

— Unit will be shipped as single package only and is stored and handled per unit manufacturer's recommendations.

Warranty (for inclusion by specifying engineer)

— U.S. and Canada only.

PRODUCTS

Equipment

— Factory assembled, single piece, air-cooled air conditioner unit. Contained within the unit enclosure is all factory wiring, piping, controls, compressor, refrigerant charge Puron® (R-410A), and special features required prior to field start-up.

Unit Cabinet

— Unit cabinet, including louvered coil guard, will be constructed of galvanized steel, bonderized, and coated with a powder coat paint.

Fans

— Condenser fan will be direct-drive foward-swept propeller type, discharging air upward.

— Condenser fan motors will be totally enclosed, 1-phase type with class B insulation and permanently lubricated bearings. Shafts will be corrosion resistant.

— Fan blades will be statically and dynamically balanced.

— Condenser fan openings will be equipped with coated steel wire safety guards.

Compressor

— Compressor will be hermetically sealed.

— Compressor will be mounted on rubber split-post vibration isolators.

— Compressor will be covered with a sound absorbing blanket.

Condenser Coil

— Condenser coil will be air cooled.

— Coil will be constructed of aluminum fins mechanically bonded to copper tubes which are then cleaned, dehydrated, and sealed.

Refrigeration Components

— Refrigeration circuit components will include liquid-line back-seating shutoff valve with sweat connections, vapor-line back-seating shutoff valve with sweat connections, system charge of Puron® (R-410A) refrigerant, and compressor oil.

— Unit will be equipped with high-pressure switch, low pressure switch and filter drier for Puron refrigerant.

Operating Characteristics

— The capacity of the unit will meet or exceed _____ Btuh at a suction temperature of _____°F/°C. The power consumption at full load will not exceed _____ kW.

— Combination of the unit and the evaporator or fan coil unit will have a total net cooling capacity of _____ Btuh or greater at conditions of _____ CFM entering air temperature at the evaporator at _____ °F/°C wet bulb and _____ °F/°C dry bulb, and air entering the unit at _____ °F/°C.

— The system will have a SEER of _____ Btuh/watt or greater at DOE conditions.

Electrical Requirements

— Nominal unit electrical characteristics will be _____ v, single phase, 60 hz. The unit will be capable of satisfactory operation within voltage limits of _____ v to _____ v.

— Unit electrical power will be single point connection.

— Control circuit will be 24v.

Special Features

— Refer to section of this literature identifying accessories and descriptions for specific features and available enhancements.

SYSTEM DESIGN SUMMARY

1. Intended for outdoor installation with free air inlet and outlet. Outdoor fan external static pressure available is less than 0.01-in. wc.
2. Minimum outdoor operating air temperature without low-ambient operation accessory is 55°F (12.8°C).
3. Maximum outdoor operating air temperature is 125°F (51.7°C).
4. For reliable operation, unit should be level in all horizontal planes.
5. For interconnecting refrigerant tube lengths greater than 80 ft (23.4 m) and/or 35 ft (10.7 m) vertical differential, consult Residential Piping and Longline Guideline and Service Manual available from equipment distributor.
6. If any refrigerant tubing is buried, provide a 6 in. (152.4 mm) vertical rise to the valve connections at the unit. Refrigerant tubing lengths up to 36 in. (914.4 mm) may be buried without further consideration. Do not bury refrigerant lines longer than 36 in. (914.4 mm).
7. Use only copper wire for electric connection at unit. Aluminum and clad aluminum are not acceptable for the type of connector provided.
8. Do not apply capillary tube indoor coils to these units.
9. Factory-supplied filter drier must be installed.

NOTES:

Copyright 2019 Carrier Corp. ● 7310 W. Morris St. ● Indianapolis, IN 46231
Edition Date: 02/19

Manufacturer reserves the right to change, at any time, specifications and designs without notice and without obligations.
Replaces: 24ANB6−7PD