24ANB7
Infinity™ 17 2–Stage Air Conditioner with Puron® Refrigerant 2 to 5 Nominal Tons

Carrier
turn to the experts™

Product Data

INFINITY™ SERIES

Carrier's Air Conditioners with Puron® refrigerant provide a collection of features unmatched by any other family of equipment. The 24ANB7 has been designed utilizing Carrier's Puron refrigerant. The environmentally sound refrigerant allows you to make a responsible decision in the protection of the earth's ozone layer.

This product has been designed and manufactured to meet Energy Star® criteria for energy efficiency when matched with appropriate coil components. Refer to the combination ratings in the Product Data for system combinations that meet Energy Star® guidelines.

NOTE: Ratings contained in this document are subject to change at any time. Always refer to the AHRI directory (www.ahridirectory.org) for the most up-to-date ratings information.

INDUSTRY LEADING FEATURES / BENEFITS

Efficiency

- 14 - 18 SEER / 11.5 - 13.7 EER
- Microtube Technology™ refrigeration system
- Indoor air quality accessories available

Sound

- Sound level as low as 69 dBA
- Quiet mount split post compressor grommets
- Forward-swept condenser fan blade
- Compressor sound hood
- Laminated steel compressor mounting plate
- 8 pole PSC ball bearing outdoor condenser fan motor

Comfort

- System supports Infinity™ Control or standard 2-stage thermostat controls

Reliability

- Puron® refrigerant - environmentally sound, won't deplete the ozone layer and low lifetime service cost.
- Front-seating service valves
- 2-stage scroll compressor
- Internal pressure relief valve
- Internal thermal overload
- Low pressure switch
- High pressure switch
- Filter drier
- Crankcase Heater standard
- Balanced refrigeration system for maximum reliability

Controls and Diagnostics

- Infinity™ control (Dedicated A,B,C,D only)
- Utility Interface Connection
- Up to 18 point diagnostic capability

Durability

WeatherArmor™ protection package:

- Solid, Durable sheet metal construction
- Steel louver coil guard
- Baked-on, complete outer coverage, powder paint

Applications

- Long-line - up to 250 feet (76.2 m) total equivalent length, up to 200 feet (60.96 m) condenser above evaporator, or up to 80 ft. (24.38 m) evaporator above condenser (See Longline Guide for more information.)
- Low ambient (down to 0°F) with complete Infinity system.

MODEL NUMBER NOMENCLATURE

1	2	3	4	5	6	7	8	9	10	11	12	13
N	N	A	A	A/N	N	N	N	A/N	A/N	A/N	N	N
2	4	A	N	B	7	3	6	A	0	0	3	0
Product Series 24=AC		Product Family A=RES AC	Tier N = Infinity	Major Series B=Puron	SEER 7=17 SEER Nominal	Cooling Capacity		Variations A=Standard	Open 0=Not Defined	Open 0=Not Defined	Voltage 3=208/230–1	Minor Series 0, 1, 2...

24ANB7

Puron™ the environmentally sound refrigerant

AHRI CERTIFIED™ www.ahridirectory.org

Use of the AHRI Certified TM Mark indicates a manufacturer's participation in the program For verification of certification for individual products, go to www.ahridirectory.org.

Certified System ™

ISO 9001 QMI-SAI Global

c UL US

IdealHumidity

ENERGY STAR

This product has been designed and manufactured to meet Energy Star® criteria for energy efficiency when matched with appropriate coil components. However, proper refrigerant charge and proper air flow are critical to achieve rated capacity and efficiency. Installation of this product should follow all manufacturing refrigerant charging and air flow instructions. **Failure to confirm proper charge and air flow may reduce energy efficiency and shorten equipment life.**

STANDARD FEATURES

FEATURES	Unit Size – Voltage, Series			
	24–30	36–30	48–30	60–30
Puron Refrigerant	X	X	X	X
Maximum SEER Rating*	17.0	18.0	17.5	16.8
2–Stage Scroll Compressor	X	X	X	X
Crankcase Heater w/Temperature Switch	X	X	X	X
Long line Capability	X	X	X	X
Low Ambient Capability to 0°F (–17.8°C) w/Infinity Control	X	X	X	X
Enhanced Diagnostics w/Infinity Control	X	X	X	X
Utility Interface Connection	X	X	X	X
Louvered Coil Guard	X	X	X	X
Field Installed Filter Drier	X	X	X	X
Front Seating Service Valves	X	X	X	X
Internal Pressure Relief Valve	X	X	X	X
Internal Thermal Overload	X	X	X	X
Long Line capability	X	X	X	X
Low Pressure Switch	X	X	X	X
High Pressure Switch	X	X	X	X
Sound Blanket	X	X	X	X

X = Standard
* With approved combinations

REFRIGERANT PIPING LENGTH LIMITATIONS

Liquid Line Sizing and Maximum Total Equivalent Lengths† for Cooling Only Systems with Puron® Refrigerant:

The maximum allowable length of a residential split system depends on the liquid line diameter and vertical separation between indoor and outdoor units.

See Table below for liquid line sizing and maximum lengths :

Maximum Total Equivalent Length
Outdoor Unit BELOW Indoor Unit

Size	Liquid Line Connection	Liquid Line Diam. w/TXV	AC with Puron Refrigerant Maximum Total Equivalent Length†: Outdoor unit BELOW Indoor Vertical Separation ft (m)								
			0–5 (0–1.5)	6–10 (1.8–3.0)	11–20 (3.4–6.1)	21–30 (6.4–9.1)	31–40 (9.4–12.2)	41–50 (12.5–15.2)	51–60 (15.5–18.3)	61–70 (18.6–21.3)	71–80 (21.6–24.4)
024 AC with Puron	3/8	1/4	75	75	75	50	50	– –	– –	– –	– –
		5/16	250*	250*	250*	250*	250*	225*	175	125	100
		3/8	250*	250*	250*	250*	250*	250*	250*	250*	250*
036 AC with Puron	3/8	5/16	175	150	150	100	100	100	75	– –	– –
		3/8	250*	250*	250*	250*	250*	250*	250*	250*	250*
048 AC with Puron	3/8	3/8	250*	250*	250*	250*	250*	250*	230	160	– –
060 AC with Puron	3/8	3/8	250*	250*	250*	225*	190	150	110	– –	– –

*** Maximum actual length not to exceed 200 ft (61 m)**

† Total equivalent length accounts for losses due to elbows or fitting. See the Long Line Guideline for details.

– – = outside acceptable range

Maximum Total Equivalent Length
Outdoor Unit ABOVE Indoor Unit

Size	Liquid Line Connection	Liquid Line Diam. w/TXV	AC with Puron Refrigerant Maximum Total Equivalent Length†: Outdoor unit ABOVE Indoor Vertical Separation ft (m)							
			25 (7.6)	26–50 (7.9–15.2)	51–75 (15.5–22.9)	76–100 (23.2–30.5)	101–125 (30.8–38.1)	126–150 (38.4–45.7)	151–175 (46.0–53.3)	176–200 (53.6–61.0)
024 AC with Puron	3/8	1/4	100	125	175	200	225*	250*	250*	250*
		5/16	250*	250*	250*	250*	250*	250*	250*	250*
		3/8	250*	250*	250*	250*	250*	250*	250*	250*
036 AC with Puron	3/8	5/16	225*	250*	250*	250*	250*	250*	250*	250*
		3/8	250*	250*	250*	250*	250*	250*	250*	250*
048 AC with Puron	3/8	3/8	250*	250*	250*	250*	250*	250*	250*	250*
060 AC with Puron	3/8	3/8	250*	250*	250*	250*	250*	250*	250*	250*

*** Maximum actual length not to exceed 200 ft (61 m)**

† Total equivalent length accounts for losses due to elbows or fitting. See the Long Line Guideline for details.

REFRIGERANT CHARGE ADJUSTMENTS

Liquid Line Size	Puron Charge oz/ft (g/m)
3/8	0.60 (17.74) (Factory charge for lineset = 9 oz / 266.16 g)
5/16	0.40 (11.83)
1/4	0.27 (7.98)

Units are factory charged for 15 ft (4.6 m) of 3/8” liquid line. The factory charge for 3/8” lineset 9 oz.(266.16 g). When using other length or diameter liquid lines, charge adjustments are required per the chart above.

Charging Formula:

[(Lineset oz/ft x total length) – (factory charge for lineset)] = charge adjustment

Example 1: System has 15 ft of line set using existing 1/4“ liquid line. What charge adjustment is required?

Formula: (.27 oz/ft x 15ft) – (9 oz) = (-4.95) oz.

Net result is to remove 4.95 oz of refrigerant from the system

Example 2: System has 45 ft of existing 5/16” liquid line. What is the charge adjustment?

Formula: (.40 oz/ft. x 45ft) – (9 oz.) = 9 oz.

Net result is to add 9 oz of refrigerant to the system

LONG LINE APPLICATIONS

An application is considered Long Line, when the refrigerant level in the system requires the use of accessories to maintain acceptable refrigerant management for systems reliability. See Accessory Usage Guideline table for required accessories. Defining a system as long line depends on the liquid line diameter, actual length of the tubing, and vertical separation between the indoor and outdoor units.

For Air Conditioner systems, the chart below shows when an application is considered Long Line.

AC WITH PURON® REFRIGERANT LONG LINE DESCRIPTION ft (m)
Beyond these lengths, long line accessories are required

Liquid Line Size	Units On Same Level	Outdoor Below Indoor	Outdoor Above Indoor
1/4	No accessories needed within allowed lengths	No accessories needed within allowed lengths	175 (53.3)
5/16	120 (36.6)	50 (15.2) vertical or 120 (36.6) total	120 (36.6)
3/8	80 (24.4)	35 (10.7) vertical or 80 24.4) total	80 (24.4)

Note: See Long Line Guideline for details

24ANB7

VAPOR LINE SIZING AND COOLING CAPACITY LOSS

Acceptable vapor line diameters provide adequate oil return to the compressor while avoiding excessive capacity loss. The suction line diameters shown in the chart below are acceptable for AC systems with Puron refrigerant:

Vapor Line Sizing and Cooling Capacity Losses — Puron® Refrigerant 2-Stage Air Conditioner Applications

Unit Nominal Size (Btuh)	Maximum Liquid Line Diameters (In. OD)	Vapor Line Diameters (In.) OD	Cooling Capacity Loss (%) Total Equivalent Line Length ft. (m)								
			26–50 (7.9–15.2)	51–80 (15.5–24.4)	81–100 (24.7–30.5)	101–125 (30.8–38.1)	126–150 (38.4–45.7)	151–175 (46.0–50.3)	176–200 (53.6–60.0)	201–225 (61.3–68.6)	226–250 (68.9–76.2)
024 2–Stage Puron AC	3/8	5/8	0	1	1	2	3	3	4	4	5
		3/4	0	0	0	0	1	1	1	1	1
036 2–Stage Puron AC	3/8	5/8	1	2	4	5	6	7	9	10	11
		3/4	0	0	1	1	2	2	3	3	4
		7/8	0	0	0	0	1	1	1	1	2
048 2–Stage Puron AC	3/8	3/4	1	2	2	3	4	5	6	7	7
		7/8	0	1	1	2	2	2	3	3	3
		1–1/8	0	0	—	—	—	—	—	—	—
060 2–Stage Puron AC	3/8	3/4	1	2	4	5	6	7	9	10	11
		7/8	0	1	2	2	3	4	4	5	5
		1–1/8	0	0	0	1	1	1	1	1	1

Applications in this area may be long line and may have height restrictions. See the *Residential Piping and Long Line Guideline*.
— Applications in this area are not recommended due to insufficient oil return

PHYSICAL DATA

UNIT SIZE – VOLTAGE, SERIES	24–30	36–30	48–30	60–30
Operating Weight lb (kg)	223 (101)	274 (124)	298 (135)	351 (159)
Shipping Weight lb (kg)	274 (124)	309 (140)	341 (155)	397 (180)
Compressor Type	2–Stage Scroll			
REFRIGERANT	Puron (R–410A)			
Control	TXV (Puron Hard Shutoff)			
Charge lb (kg)	6.63 (3.01)	10.83 (4.91)	11.63 (5.27)	15.13 (6.86)
COND FAN	Propeller Type, Direct Drive			
Air Discharge	Vertical			
Air Qty (CFM)	3008	3530	4650	4800
Motor HP	1/10	1/5	1/4	1/4
Motor RPM	800	800	800	800
COND COIL				
Face Area (Sq ft)	21.56	21.56	25.15	30.18
Fins per In.	25	20	20	20
Rows	1	2	2	2
Circuits	5	7	7	8
VALVE CONNECT. (In. ID)				
Vapor	3/4	7/8	7/8	7/8
Liquid	3/8			
REFRIGERANT TUBES (In. OD)				
Rated Vapor*	3/4	7/8	1–1/8	1–1/8
Liquid	3/8			

*Units are rated with 25 ft (7.6 m) of lineset length. See *Vapor Line Sizing and Cooling Capacity Loss* table when using other sizes and lengths of lineset.

ELECTRICAL DATA

Unit Size – Voltage, Series	V/PH	OPER VOLTS*		COMPR		FAN	MCA	MIN WIRE SIZE†	MIN WIRE SIZE†	MAX LENGTH ft. (m)‡	MAX LENGTH ft. (m)‡	MAX FUSE** or CKT BRK AMPS
		MIN	MAX	RLA	LRA	FLA		60° C	75° C	60° C	75° C	
24–30	208/230	197	253	10.3	52.0	0.7	13.6	14.00	14.00	58 (17.7)	55 (16.8)	20
36–30	208/230			16.7	82.0	0.94	21.8	12.00	12.00	57 (17.4)	54 (16.5)	35
48–30	208/230			21.2	96.0	1.3	27.8	10.00	10.00	71 (21.6)	68 (20.7)	40
60–30	208/230			23.0	118.0	1.3	30.1	8.00	10.00	103 (31.4)	63 (19.2)	50

* Permissible limits of the voltage range at which the unit will operate satisfactorily

† If wire is applied at ambient greater than 30°C, consult table 310–16 of the NEC (NFPA 70). The ampacity of non–metallic–sheathed cable (NM), trade name ROMEX, shall be that of 60°C conditions, per the NEC (NFPA 70) Article 336–26. If other than uncoated (no–plated), 60 or 75°C insulation, copper wire (solid wire for 10 AWG or smaller, stranded wire for larger than 10 AWG) is used, consult applicable tables of the NEC (NFPA 70).

‡ Length shown is as measured one way along wire path between unit and service panel for voltage drop not to exceed 2%.

** Time–Delay fuse.

FLA – Full Load Amps
LRA – Locked Rotor Amps
MCA – Minimum Circuit Amps
RLA – Rated Load Amps

NOTE: Control circuit is 24–V on all units and requires external power source. Copper wire must be used from service disconnect to unit. All motors/compressors contain internal overload protection.

Complies with 2010 requirements of ASHRAE Standards 90.1

A-WEIGHTED SOUND POWER (dBA)

Unit Size – Voltage, Series	Standard Rating (dBA)	Typical Octave Band Spectrum (dBA, without tone adjustment)						
		125	250	500	1000	2000	4000	8000
24–30	70–low stage	56.5	58.5	65.0	64.5	61.0	57.0	50.5
	71–high stage	54.5	58.0	65.5	65.0	62.5	58.0	55.0
36–30	69–low stage	55.0	61.0	64.0	63.5	60.0	54.5	48.5
	71–high stage	53.5	60.5	64.5	66.0	60.0	55.5	52.0
48–30	72–low stage	54.5	63.5	65.5	66.0	60.5	57.5	51.5
	72–high stage	55.0	63.5	65.5	66.0	60.0	58.0	54.0
60–30	72–low stage	60.0	65.5	66.5	65.5	60.5	58.0	51.5
	72–high stage	60.0	63.5	64.5	65.0	60.0	57.5	52.0

NOTE: Tested in accordance with AHRI Standard 270–08. (Not listed with AHRI).

CHARGING SUBCOOLING (TXV-TYPE EXPANSION DEVICE)

UNIT SIZE–VOLTAGE, SERIES	REQUIRED SUBCOOLING °F (°C)
24–30	8 (4.4)
36–30	13 (7.2)
48–30	11 (6.1)
60–30	12 (6.7)

ACCESSORY CONTROLS

PART NUMBER	DESCRIPTION
SYSTXCCUID01–V	Infinity Control Deluxe 7–Day Programmable (4–Wire User Interface w/ multiple functionality)
SYSTXCCUIZ01–V	Infinity Control Deluxe Zoning 7–Day Programmable (Wall–mounted control for a multi–zone system. w/ multiple functionality)
SYSTXCCUID01–B	Infinity Control Deluxe 7–Day Programmable (Wall–mounted system control.)
SYSTXCCUIZ01–B	Infinity Control Deluxe Zoning 7–Day Programmable (Wall–mounted control for a multi–zone system.)
SYSTXCC4ZC01	Infinity 4–Zone Damper Control Module (Wall–mounted control for a four–zone system.)
SYSTXCCSMS01	Infinity Smart Sensor (Optional wall control used to monitor temperature and/or fan control in an individual zone.)
SYSTXCCRRS01	Infinity Remote Room Sensor (Monitors temperature in an individual zone.)
SYSTXCCRCT01 or SYSTXCCRWF01	Infinity System Remote Access Module (Hardware for wireless access and control via internet.)
SYSTXCCNIM01	Infinity Network Interface Module (Connects Heat Recovery and Energy Recovery Ventilators on non–zoning applications.)

ACCESSORIES

ORDER NUMBER	DESCRIPTION	24–30	36–30	48–30	60–30
KSAHS2301AAA	HARD START KIT	X			
KSAHS2401AAA	HARD START KIT		X		
KSAHS2501AAA	HARD START KIT			X	
KSAHS2601AAA	HARD START KIT				X
KSASF0101AAA	SUPPORT FEET	X	X	X	X
KSATX0201PUR	TXV PURON HSO	X			
KSATX0301PUR	TXV PURON HSO		X		
KSATX0401PUR	TXV PURON HSO			X	
KSATX0501PUR	TXV PURON HSO				X

x = Accessory

ACCESSORY USAGE GUIDELINE

ACCESSORY	REQUIRED FOR LOW–AMBIENT COOLING APPLICATIONS (Below 55°F/12.8°C)	REQUIRED FOR LONG LINE APPLICATIONS* (Over 80 ft/24.38 m)	REQUIRED FOR SEA COAST APPLICATIONS (Within 2 miles/3.22 km)
Crankcase Heater	Standard	Standard	Standard
Evaporator Freeze Protection	Standard with Infinity™ Control (Low Ambient not allowed with non–communicating thermostat)	No	No
Liquid–Line Solenoid Valve	No	No	No
Low–Ambient Control	Standard with Infinity Control (Low ambient not allowed with non–communicating thermostat)	No	No
Puron Refrigerant Balance Port Hard–ShutOff TXV	Yes†	Yes†	Yes†
Support Feet	Recommended	No	Recommended
Winter Start Control	Standard with Infinity Control (Low Ambient not allowed with non–communicating thermostat)	No	No

* For tubing set lengths between 80 and 200 ft. (24.38 and 60.96 m) horizontal or 35 ft. (10.7 m) vertical differential (total equivalent length), refer to the Long Line Guideline—Air Conditioners and Heat Pumps using Puron® Refrigerant.

† Required on all indoor units. Standard on all new Puron refrigerant fan coils and furnace coils.

Accessory Description and Usage (Listed Alphabetically)

1. Compressor Start Assist - Capacitor and Relay

Start capacitor and relay gives a ”hard” boost to compressor motor at each start up.

Usage Guideline:

Not required on this unit since compressor always starts unloaded.

Available if required by local codes.

2. Crankcase Heater

An electric resistance heater which mounts to the base of the compressor to keep the lubricant warm during off cycles. Improves compressor lubrication on restart and minimizes the chance of liquid slugging.

Usage Guideline:

Required in low ambient cooling applications.

Required in long line applications.

Suggested in all commercial applications.

3. Support Feet

Four stick-on plastic feet that raise the unit 4 in. (101.6 mm) above the mounting pad. This allows sand, dirt, and other debris to be flushed from the unit base, minimizing corrosion.

Usage Guideline:

Suggested in the following applications:

Coastal installations.

Windy areas or where debris is normally circulating.

Rooftop installations.

For improved sound ratings.

4. Thermostatic Expansion Valve (TXV)

A modulating flow-control valve which meters refrigerant liquid flow rate into the evaporator in response to the superheat of the refrigerant gas leaving the evaporator.

Kit includes valve, adapter tubes, and external equalizer tube. Hard shut off types are available.

NOTE: When using a hard shut off TXV with single phase reciprocating compressors, a Compressor Start Assist Capacitor and Relay is required.

Usage Guideline:

Required to achieve AHRI ratings in certain equipment combinations. Refer to combination ratings.

Hard shut off TXV or LLS required in air conditioner long line applications.

DIMENSIONS - ENGLISH

UNIT	SERIES	ELECTRICAL CHARACTERISTICS				A	B	C	D	E	F	G	K	L	M	N	P	OPERATING WEIGHT (lbs)	SHIPPING WEIGHT (lbs)	SHIPPING DIMENSIONS (L x W x H)
24ANB724	0	X	O	O	O	31 3/16"	39 3/4"	3 3/4"	3/4"	6 9/16"	24 11/16"	9 1/8"	2 13/16"	1/2"	16 1/4"	15 3/4"	16 3/4"	223	274	32 5/16" X 35 1/2" X 46 1/8"
24ANB736	0	X	O	O	O	31 3/16"	39 3/4"	3 7/8"	7/8"	6 9/16"	24 11/16"	9 1/8"	2 15/16"	5/8"	15 1/4"	16 1/4"	18"	274	309	32 5/16" X 35 1/2" X 46 1/8"
24ANB748	0	X	O	O	O	35"	40 5/8"	3 7/8"	7/8"	6 9/16"	28 7/16"	9 1/8"	2 15/16"	5/8"	17 3/4"	16 1/2"	18 3/4"	298	341	36 1/8" X 39 1/4" X 46 1/8"
24ANB760	0	X	O	O	O	35"	47 7/16"	3 7/8"	7/8"	6 9/16"	28 7/16"	9 1/8"	2 15/16"	5/8"	17 1/4"	16 3/4"	21"	351	397	36 1/8" X 39 1/4" X 49 9/16"
		208-230-1-60	230-1-60	208/230-3-60	460-3-60															

X = YES
O = NO

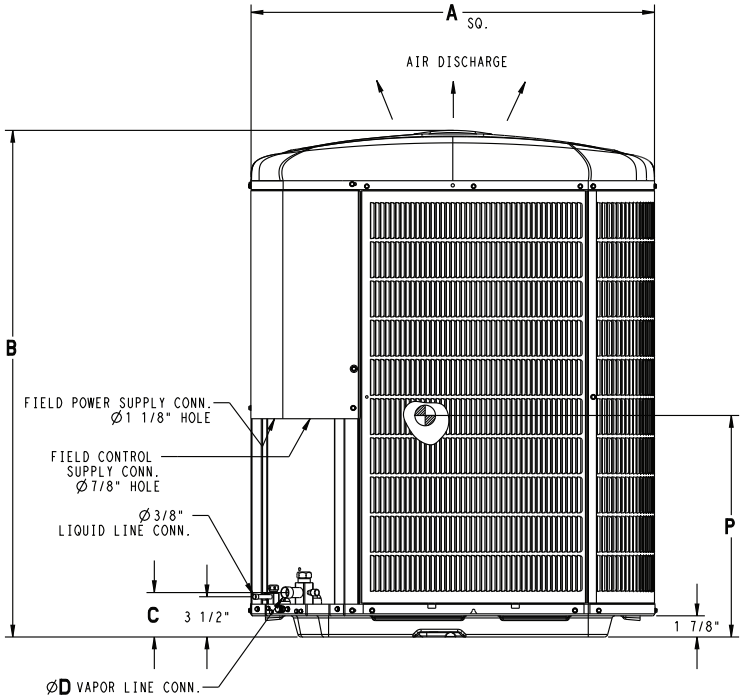

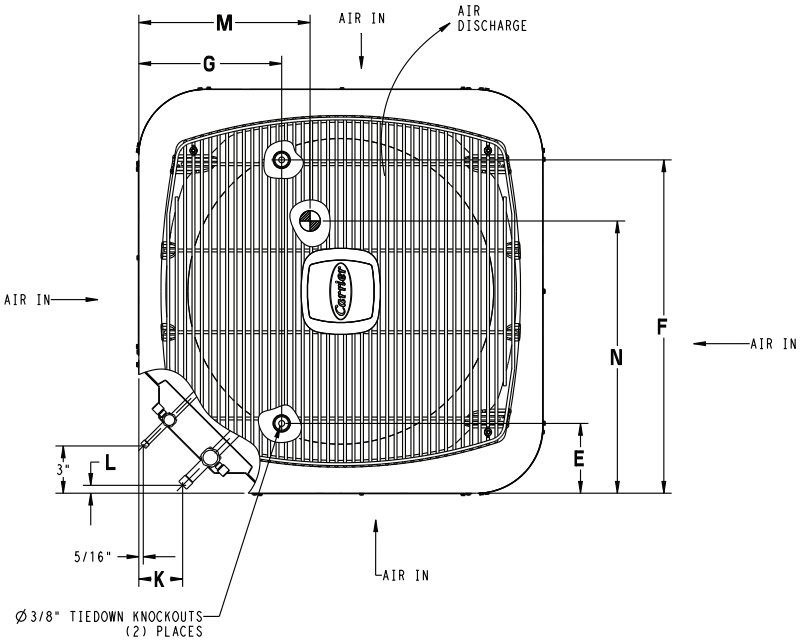

UNIT SIZE	MINIMUM MOUNTING PAD DIMENSIONS
24, 36	31 1/2" X 31 1/2"
48, 60	35" X 35"

DIMENSIONS - SI

UNIT	SERIES	ELECTRICAL CHARACTERISTICS				A	B	C	D	E	F	G	K	L	M	N	P	OPERATING WEIGHT (Kgs)	SHIPPING WEIGHT (Kgs)	SHIPPING DIMENSIONS (L x W x H)
24ANB724	0	X	O	O	O	792.5	1009.4	95.6	19.1	166.1	626.3	231.3	70.9	12.8	412.8	400.1	425.5	101	124	821.2 X 901.2 X 1172.2
24ANB736	0	X	O	O	O	792.5	1009.4	97.9	22.2	166.1	626.3	231.3	74.5	16.3	387.4	412.8	457.2	124	140	821.2 X 901.2 X 1172.2
24ANB748	0	X	O	O	O	889.0	1032.5	97.9	22.2	166.1	722.8	231.3	74.5	16.3	450.9	419.1	476.3	135	155	917.7 X 997.7 X 1172.2
24ANB760	0	X	O	O	O	889.0	1205.3	97.9	22.2	166.1	722.8	231.3	74.5	16.3	438.2	425.5	533.4	159	180	917.7 X 997.7 X 1315.7
		208-230-1-60	230-1-60	208/230-3-60	460-3-60															

X = YES
O = NO

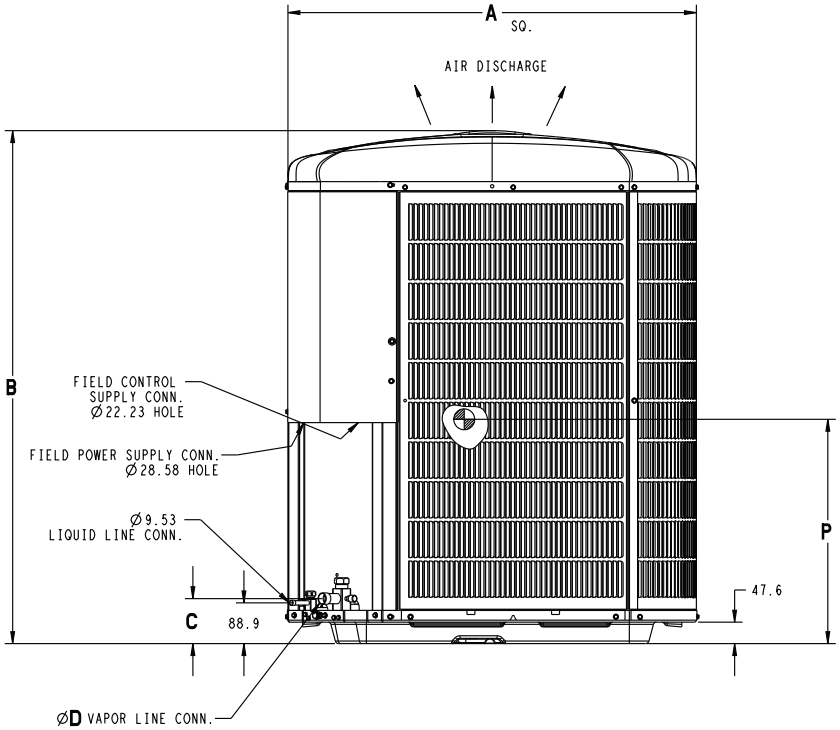

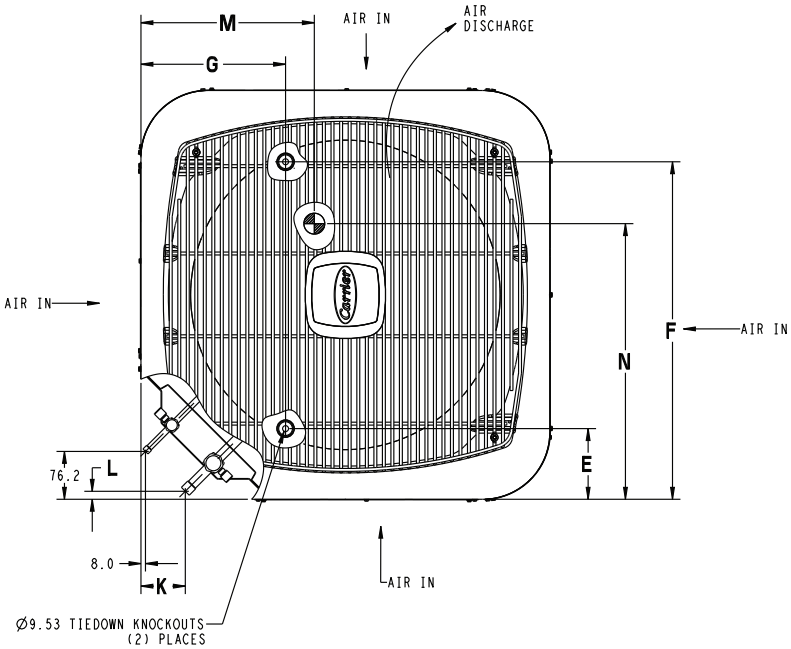

UNIT SIZE	MINIMUM MOUNTING PAD DIMENSIONS
24, 36	800.1 X 800.1
48, 60	889.0 X 889.0

CLEARANCES

Clearances (various examples)

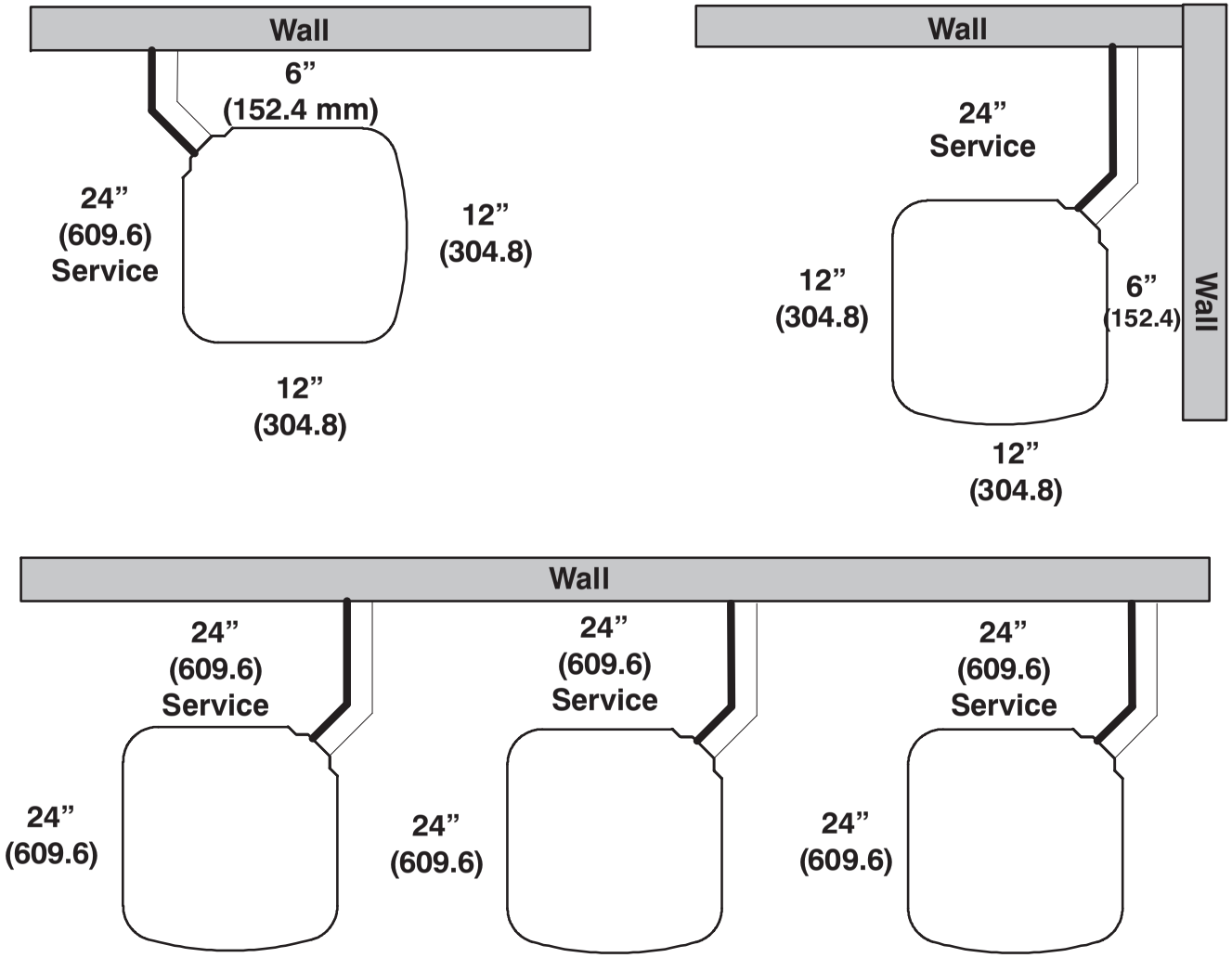

Note: Numbers in ( ) = mm

IMPORTANT: When installing multiple units in an alcove, roof well, or partially enclosed area, ensure there is adequate ventilation to prevent re-circulation of discharge air.

A07833

COMBINATION RATINGS

AHRI Ref. Number	Model Number	Indoor Coil Model Number	Furnace Model Number	AHRI Standard Ratings – Cooling				
				Cooling Capacity	EER	SEER	ID CFM	
							High	Low
4647290	24ANB724A**30	†CNPV*4217A**	58PH*045–08	24,800	13.1	16.0	715	585
4647291	24ANB724A**30	CAP**2414A**+TDR		23,800	11.8	14.0	700	560
4647421	24ANB724A**30	CAP**2414A**+UI	58CV(A,X)070–12	24,400	13.0	16.2	700	560
4647335	24ANB724A**30	CAP**2417A**	58MEB040–12	24,600	13.2	16.5	765	655
4647336	24ANB724A**30	CAP**2417A**	58MEC060–12	24,600	13.0	16.2	780	625
4647552	24ANB724A**30	CAP**2417A**	58UVB060–14	24,400	13.1	16.0	725	500
4647548	24ANB724A**30	CAP**2417A**	58VLR105–12	24,400	13.1	16.1	715	470
4647569	24ANB724A**30	CAP**2417A**	58VMR105–12	24,600	13.0	16.0	800	485
4647369	24ANB724A**30	CAP**2417A**	OVLAAB036098	24,800	12.5	16.0	865	530
4647368	24ANB724A**30	CAP**2417A**	OVMAAB036098	24,400	12.7	16.2	725	550
4647370	24ANB724A**30	CAP**2417A**	OVMAAB042112	24,200	13.0	16.2	690	580
4647292	24ANB724A**30	CAP**2417A**+TDR		23,800	11.8	14.0	700	560
4647423	24ANB724A**30	CAP**2417A**+UI	58CV(A,X)070–12	24,400	13.0	16.2	700	560
4647424	24ANB724A**30	CAP**2417A**+UI	58CV(A,X)090–16	24,400	13.2	16.0	700	560
4647422	24ANB724A**30	CAP**2417A**+UI	58MV(B,C)060–14	24,400	13.2	16.0	700	560
4647337	24ANB724A**30	CAP**3014A**	58MEB040–12	24,800	13.0	16.2	760	650
4647338	24ANB724A**30	CAP**3014A**	58MEC060–12	24,800	13.0	16.2	770	615
4647294	24ANB724A**30	CAP**3014A**	58PH*045–08	24,400	13.0	16.0	720	585
4647293	24ANB724A**30	CAP**3014A**+TDR		24,000	11.8	14.0	700	560
4647425	24ANB724A**30	CAP**3014A**+UI	58CV(A,X)070–12	24,400	13.1	16.0	700	560
4647339	24ANB724A**30	CAP**3017A**	58MEB040–12	24,800	13.4	16.5	785	680
4647340	24ANB724A**30	CAP**3017A**	58MEC060–12	25,000	13.2	16.2	795	650
4647553	24ANB724A**30	CAP**3017A**	58UVB060–14	24,600	13.3	16.1	725	500
4647571	24ANB724A**30	CAP**3017A**	58VLR105–12	25,200	13.0	16.3	880	550
4647570	24ANB724A**30	CAP**3017A**	58VMR105–12	25,000	13.0	16.0	800	485
4647372	24ANB724A**30	CAP**3017A**	OVLAAB036098	25,000	12.7	16.1	865	530
4647371	24ANB724A**30	CAP**3017A**	OVMAAB036098	24,600	13.0	16.2	725	550
4647373	24ANB724A**30	CAP**3017A**	OVMAAB042112	24,400	13.0	16.4	690	580
4647295	24ANB724A**30	CAP**3017A**+TDR		24,000	11.8	14.0	700	560
4647427	24ANB724A**30	CAP**3017A**+UI	58CV(A,X)070–12	24,400	13.0	16.2	700	560
4647428	24ANB724A**30	CAP**3017A**+UI	58CV(A,X)090–16	24,600	13.3	16.0	700	560
4647426	24ANB724A**30	CAP**3017A**+UI	58MV(B,C)060–14	24,400	13.3	16.3	700	560
4647341	24ANB724A**30	CAP**3614A**	58MEB040–12	24,800	13.0	16.2	765	660
4647342	24ANB724A**30	CAP**3614A**	58MEC060–12	25,000	13.0	16.2	780	630
4647297	24ANB724A**30	CAP**3614A**	58PH*045–08	24,600	13.0	16.0	725	590
4647296	24ANB724A**30	CAP**3614A**+TDR		24,000	11.9	14.0	700	560
4647429	24ANB724A**30	CAP**3614A**+UI	58CV(A,X)070–12	24,600	13.1	16.0	700	560
4647343	24ANB724A**30	CAP**3617A**	58MEB040–12	25,000	13.4	16.6	790	695
4647344	24ANB724A**30	CAP**3617A**	58MEC060–12	25,000	13.2	16.2	805	660
4647554	24ANB724A**30	CAP**3617A**	58UVB060–14	24,800	13.3	16.2	725	500
4647573	24ANB724A**30	CAP**3617A**	58VLR105–12	25,200	13.0	16.2	880	550
4647572	24ANB724A**30	CAP**3617A**	58VMR105–12	25,000	13.0	16.0	800	485
4647375	24ANB724A**30	CAP**3617A**	OVLAAB036098	25,200	13.0	16.2	865	530
4647374	24ANB724A**30	CAP**3617A**	OVMAAB036098	24,600	13.0	16.2	725	550
4647376	24ANB724A**30	CAP**3617A**	OVMAAB042112	24,600	13.2	16.5	690	580
4647298	24ANB724A**30	CAP**3617A**+TDR		24,000	11.9	14.0	700	560
4647431	24ANB724A**30	CAP**3617A**+UI	58CV(A,X)070–12	24,600	13.2	16.2	700	560
4647432	24ANB724A**30	CAP**3617A**+UI	58CV(A,X)090–16	24,600	13.3	16.5	700	560
4647430	24ANB724A**30	CAP**3617A**+UI	58MV(B,C)060–14	24,600	13.3	16.4	700	560
4647334	24ANB724A**30	CAP**3619A**	58HDV040––12	24,800	12.9	16.0	765	595
4647601	24ANB724A**30	CAP**3619A**	58HDV060––12	24,600	13.0	16.0	720	575
4647559	24ANB724A**30	CAP**3619A**	58UVB060–14	24,800	13.0	16.0	725	500
4647577	24ANB724A**30	CAP**3619A**	58VLR105–12	25,200	13.0	16.2	880	550
4647576	24ANB724A**30	CAP**3619A**	58VMR105–12	25,000	13.0	16.0	800	485
4647381	24ANB724A**30	CAP**3619A**	OVLAAB036098	25,200	13.0	16.2	865	530
4647380	24ANB724A**30	CAP**3619A**	OVMAAB036098	24,600	13.0	16.2	725	550
4647382	24ANB724A**30	CAP**3619A**	OVMAAB042112	24,600	13.2	16.5	690	580
4647333	24ANB724A**30	CAP**3619A**+TDR		24,000	11.8	14.0	700	560
4647443	24ANB724A**30	CAP**3619A**+UI	58CV(A,X)090–16	24,600	13.2	16.2	700	560
4647444	24ANB724A**30	CAP**3619A**+UI	58CV(A,X)110–20	24,600	13.2	16.2	705	705
4647439	24ANB724A**30	CAP**3619A**+UI	58MV(B,C)060–14	24,600	13.0	16.2	700	560
4647440	24ANB724A**30	CAP**3619A**+UI	58MV(B,C)080–14	24,600	13.0	16.2	700	560
4647441	24ANB724A**30	CAP**3619A**+UI	58MV(B,C)080–20	24,600	13.0	16.0	700	665
4647442	24ANB724A**30	CAP**3619A**+UI	58MV(B,C)100–20	24,600	13.0	16.2	700	680
4647345	24ANB724A**30	CAP**3621A**	58MEC060–12	25,200	13.0	16.5	820	695
4647555	24ANB724A**30	CAP**3621A**	58UVB060–14	24,800	13.2	16.0	725	500
4647556	24ANB724A**30	CAP**3621A**	58UVB080–14	24,400	13.3	16.2	660	490
4647557	24ANB724A**30	CAP**3621A**	58UVB080–20	25,200	13.2	16.0	840	630
4647558	24ANB724A**30	CAP**3621A**	58UVB100–20	25,000	13.3	16.5	800	665
4647575	24ANB724A**30	CAP**3621A**	58VLR105–12	25,200	13.0	16.2	880	550
4647574	24ANB724A**30	CAP**3621A**	58VMR105–12	25,000	13.0	16.0	800	485

See notes on page 25

COMBINATION RATINGS CONTINUED

AHRI Ref. Number	Model Number	Indoor Coil Model Number	Furnace Model Number	AHRI Standard Ratings – Cooling				
				Cooling Capacity	EER	SEER	ID CFM	
							High	Low
4647378	24ANB724A**30	CAP**3621A**	OVLAAB036098	25,200	13.0	16.2	865	530
4647377	24ANB724A**30	CAP**3621A**	OVMAAB036098	24,600	13.0	16.2	725	550
4647379	24ANB724A**30	CAP**3621A**	OVMAAB042112	24,600	13.2	16.5	690	580
4647299	24ANB724A**30	CAP**3621A**+TDR		24,000	11.9	14.0	700	560
4647437	24ANB724A**30	CAP**3621A**+UI	58CV(A,X)090–16	24,600	13.2	16.2	700	560
4647438	24ANB724A**30	CAP**3621A**+UI	58CV(A,X)110–20	24,600	13.3	16.5	705	705
4647433	24ANB724A**30	CAP**3621A**+UI	58MV(B,C)060–14	24,600	13.2	16.2	700	560
4647434	24ANB724A**30	CAP**3621A**+UI	58MV(B,C)080–14	24,600	13.3	16.4	700	560
4647435	24ANB724A**30	CAP**3621A**+UI	58MV(B,C)080–20	24,600	13.2	16.0	700	665
4647436	24ANB724A**30	CAP**3621A**+UI	58MV(B,C)100–20	24,600	13.3	16.5	700	680
4647357	24ANB724A**30	CNPH*2417A**	58MEB040–12	24,400	13.1	16.4	725	610
4647358	24ANB724A**30	CNPH*2417A**	58MEC060–12	24,400	13.0	16.0	735	575
4647310	24ANB724A**30	CNPH*2417A**	58PH*045–08	24,200	12.8	15.9	695	565
4647550	24ANB724A**30	CNPH*2417A**	58VLR105–12	24,400	13.0	16.0	715	470
4647589	24ANB724A**30	CNPH*2417A**	58VMR105–12	24,600	12.5	16.0	800	485
4647401	24ANB724A**30	CNPH*2417A**	OVLAAB036098	24,800	12.2	16.0	865	530
4647400	24ANB724A**30	CNPH*2417A**	OVMAAB036098	24,400	12.5	16.0	725	550
4647402	24ANB724A**30	CNPH*2417A**	OVMAAB042112	24,200	13.0	16.2	690	580
4647309	24ANB724A**30	CNPH*2417A**+TDR		23,800	11.8	14.0	700	560
4647474	24ANB724A**30	CNPH*2417A**+UI	58CV(A,X)070–12	24,400	13.0	16.0	700	560
4647475	24ANB724A**30	CNPH*2417A**+UI	58CV(A,X)090–16	24,400	13.1	16.0	700	560
4647476	24ANB724A**30	CNPH*2417A**+UI	58CV(A,X)110–20	24,400	13.0	16.0	705	705
4647477	24ANB724A**30	CNPH*2417A**+UI	58CV(A,X)135–22	24,400	13.0	16.0	700	680
4647478	24ANB724A**30	CNPH*2417A**+UI	58CV(A,X)155–22	24,400	13.0	16.2	700	680
4647469	24ANB724A**30	CNPH*2417A**+UI	58MV(B,C)060–14	24,400	13.1	16.0	700	560
4647470	24ANB724A**30	CNPH*2417A**+UI	58MV(B,C)080–14	24,200	13.0	16.0	700	560
4647471	24ANB724A**30	CNPH*2417A**+UI	58MV(B,C)080–20	24,200	13.0	16.0	700	665
4647472	24ANB724A**30	CNPH*2417A**+UI	58MV(B,C)100–20	24,200	13.0	16.0	700	680
4647473	24ANB724A**30	CNPH*2417A**+UI	58MV(B,C)120–20	24,400	13.0	16.0	700	680
4647468	24ANB724A**30	CNPH*2417A**+UI	58MVB040–14	24,400	12.9	16.0	700	560
4647313	24ANB724A**30	CNPH*3017A**	58HDV040––12	24,600	12.7	16.0	750	585
4647314	24ANB724A**30	CNPH*3017A**	58HDV060––12	24,800	12.7	16.0	805	630
4647359	24ANB724A**30	CNPH*3017A**	58MEB040–12	24,800	13.4	16.5	775	675
4647360	24ANB724A**30	CNPH*3017A**	58MEC060–12	25,000	13.2	16.2	790	645
4647312	24ANB724A**30	CNPH*3017A**	58PH*045–08	24,600	13.0	16.0	730	595
4647591	24ANB724A**30	CNPH*3017A**	58VLR105–12	25,200	13.0	16.0	880	550
4647590	24ANB724A**30	CNPH*3017A**	58VMR105–12	25,000	13.0	16.0	800	485
4647404	24ANB724A**30	CNPH*3017A**	OVLAAB036098	25,000	12.7	16.1	865	530
4647403	24ANB724A**30	CNPH*3017A**	OVMAAB036098	24,600	13.0	16.2	725	550
4647405	24ANB724A**30	CNPH*3017A**	OVMAAB042112	24,400	13.0	16.4	690	580
4647311	24ANB724A**30	CNPH*3017A**+TDR		24,000	11.9	14.0	700	560
4647485	24ANB724A**30	CNPH*3017A**+UI	58CV(A,X)070–12	24,600	13.1	16.0	700	560
4647486	24ANB724A**30	CNPH*3017A**+UI	58CV(A,X)090–16	24,600	13.3	16.5	700	560
4647487	24ANB724A**30	CNPH*3017A**+UI	58CV(A,X)110–20	24,600	13.0	16.2	705	705
4647488	24ANB724A**30	CNPH*3017A**+UI	58CV(A,X)135–22	24,600	13.2	16.2	700	680
4647489	24ANB724A**30	CNPH*3017A**+UI	58CV(A,X)155–22	24,600	13.2	16.2	700	680
4647480	24ANB724A**30	CNPH*3017A**+UI	58MV(B,C)060–14	24,600	13.3	16.3	700	560
4647481	24ANB724A**30	CNPH*3017A**+UI	58MV(B,C)080–14	24,400	13.2	16.0	700	560
4647482	24ANB724A**30	CNPH*3017A**+UI	58MV(B,C)080–20	24,400	13.0	16.0	700	665
4647483	24ANB724A**30	CNPH*3017A**+UI	58MV(B,C)100–20	24,400	13.0	16.0	700	680
4647484	24ANB724A**30	CNPH*3017A**+UI	58MV(B,C)120–20	24,600	13.0	16.2	700	680
4647479	24ANB724A**30	CNPH*3017A**+UI	58MVB040–14	24,600	13.1	16.0	700	560
4647593	24ANB724A**30	CNPH*3117A**	58VLR105–12	25,800	13.0	16.5	880	550
4647592	24ANB724A**30	CNPH*3117A**	58VMR105–12	25,400	13.2	16.2	800	485
4647407	24ANB724A**30	CNPH*3117A**	OVLAAB036098	25,600	13.0	16.5	865	530
4647406	24ANB724A**30	CNPH*3117A**	OVMAAB036098	25,000	13.0	16.5	725	550
4647408	24ANB724A**30	CNPH*3117A**	OVMAAB042112	25,000	13.2	16.7	690	580
4647496	24ANB724A**30	CNPH*3117A**+UI	58CV(A,X)070–12	25,000	13.2	16.5	700	560
4647497	24ANB724A**30	CNPH*3117A**+UI	58CV(A,X)090–16	25,000	13.2	16.5	700	560
4647498	24ANB724A**30	CNPH*3117A**+UI	58CV(A,X)110–20	25,000	13.2	16.5	705	705
4647499	24ANB724A**30	CNPH*3117A**+UI	58CV(A,X)135–22	25,000	13.5	17.0	700	680
4647500	24ANB724A**30	CNPH*3117A**+UI	58CV(A,X)155–22	25,000	13.5	17.0	700	680
4647491	24ANB724A**30	CNPH*3117A**+UI	58MV(B,C)060–14	25,000	13.2	16.5	700	560
4647492	24ANB724A**30	CNPH*3117A**+UI	58MV(B,C)080–14	25,000	13.2	16.2	700	560
4647493	24ANB724A**30	CNPH*3117A**+UI	58MV(B,C)080–20	25,000	13.2	16.2	700	665
4647494	24ANB724A**30	CNPH*3117A**+UI	58MV(B,C)100–20	25,000	13.2	16.5	700	680
4647495	24ANB724A**30	CNPH*3117A**+UI	58MV(B,C)120–20	25,000	13.2	16.5	700	680
4647490	24ANB724A**30	CNPH*3117A**+UI	58MVB040–14	25,000	13.2	16.5	700	560
4647317	24ANB724A**30	CNPH*3617A**	58HDV040––12	24,600	12.7	16.0	750	590
4647318	24ANB724A**30	CNPH*3617A**	58HDV060––12	24,800	12.7	16.0	805	630
4647361	24ANB724A**30	CNPH*3617A**	58MEC060–12	25,000	13.2	16.2	790	645

See notes on page 25

COMBINATION RATINGS CONTINUED

AHRI Ref. Number	Model Number	Indoor Coil Model Number	Furnace Model Number	AHRI Standard Ratings – Cooling				
				Cooling Capacity	EER	SEER	ID CFM	
							High	Low
4647316	24ANB724A**30	CNPH*3617A**	58PH*045–08	24,600	13.0	16.0	730	595
4647595	24ANB724A**30	CNPH*3617A**	58VLR105–12	25,200	13.0	16.0	880	550
4647594	24ANB724A**30	CNPH*3617A**	58VMR105–12	25,000	13.0	16.0	800	485
4647410	24ANB724A**30	CNPH*3617A**	OVLAAB036098	25,000	12.7	16.1	865	530
4647409	24ANB724A**30	CNPH*3617A**	OVMAAB036098	24,600	13.0	16.2	725	550
4647411	24ANB724A**30	CNPH*3617A**	OVMAAB042112	24,400	13.0	16.4	690	580
4647315	24ANB724A**30	CNPH*3617A**+TDR		24,000	11.9	14.0	700	560
4647507	24ANB724A**30	CNPH*3617A**+UI	58CV(A,X)070–12	24,600	13.1	16.0	700	560
4647508	24ANB724A**30	CNPH*3617A**+UI	58CV(A,X)090–16	24,600	13.3	16.5	700	560
4647509	24ANB724A**30	CNPH*3617A**+UI	58CV(A,X)110–20	24,600	13.0	16.2	705	705
4647510	24ANB724A**30	CNPH*3617A**+UI	58CV(A,X)135–22	24,600	13.2	16.2	700	680
4647511	24ANB724A**30	CNPH*3617A**+UI	58CV(A,X)155–22	24,600	13.2	16.2	700	680
4647502	24ANB724A**30	CNPH*3617A**+UI	58MV(B,C)060–14	24,600	13.3	16.3	700	560
4647503	24ANB724A**30	CNPH*3617A**+UI	58MV(B,C)080–14	24,400	13.2	16.0	700	560
4647504	24ANB724A**30	CNPH*3617A**+UI	58MV(B,C)080–20	24,400	13.0	16.0	700	665
4647505	24ANB724A**30	CNPH*3617A**+UI	58MV(B,C)100–20	24,400	13.0	16.0	700	680
4647506	24ANB724A**30	CNPH*3617A**+UI	58MV(B,C)120–20	24,600	13.0	16.2	700	680
4647501	24ANB724A**30	CNPH*3617A**+UI	58MVB040–14	24,600	13.1	16.0	700	560
4647346	24ANB724A**30	CNPV*2414A**	58MEB040–12	24,400	13.0	16.2	725	610
4647347	24ANB724A**30	CNPV*2414A**	58MEC060–12	24,400	13.0	16.0	735	575
4647301	24ANB724A**30	CNPV*2414A**	58PH*045–08	24,200	12.8	15.9	695	565
4647300	24ANB724A**30	CNPV*2414A**+TDR		23,800	11.8	14.0	700	560
4647445	24ANB724A**30	CNPV*2414A**+UI	58CV(A,X)070–12	24,400	13.0	16.0	700	560
4647348	24ANB724A**30	CNPV*2417A**	58MEB040–12	24,400	13.1	16.4	725	610
4647349	24ANB724A**30	CNPV*2417A**	58MEC060–12	24,400	13.0	16.0	735	575
4647560	24ANB724A**30	CNPV*2417A**	58UVB060–14	24,400	13.0	16.0	725	500
4647549	24ANB724A**30	CNPV*2417A**	58VLR105–12	24,400	13.0	16.0	715	470
4647578	24ANB724A**30	CNPV*2417A**	58VMR105–12	24,600	12.7	16.0	800	485
4647384	24ANB724A**30	CNPV*2417A**	OVLAAB036098	24,800	12.2	16.0	865	530
4647383	24ANB724A**30	CNPV*2417A**	OVMAAB036098	24,400	12.5	16.0	725	550
4647385	24ANB724A**30	CNPV*2417A**	OVMAAB042112	24,200	13.0	16.2	690	580
4647302	24ANB724A**30	CNPV*2417A**+TDR		23,800	11.8	14.0	700	560
4647447	24ANB724A**30	CNPV*2417A**+UI	58CV(A,X)070–12	24,400	13.0	16.2	700	560
4647448	24ANB724A**30	CNPV*2417A**+UI	58CV(A,X)090–16	24,400	13.1	16.0	700	560
4647446	24ANB724A**30	CNPV*2417A**+UI	58MV(B,C)060–14	24,400	13.0	16.0	700	560
4647350	24ANB724A**30	CNPV*3014A**	58MEB040–12	24,600	13.0	16.2	740	630
4647351	24ANB724A**30	CNPV*3014A**	58MEC060–12	24,800	13.0	16.2	750	605
4647304	24ANB724A**30	CNPV*3014A**	58PH*045–08	24,400	12.9	16.0	705	580
4647303	24ANB724A**30	CNPV*3014A**+TDR		24,000	11.9	14.0	700	560
4647449	24ANB724A**30	CNPV*3014A**+UI	58CV(A,X)070–12	24,400	13.1	16.0	700	560
4647352	24ANB724A**30	CNPV*3017A**	58MEC060–12	25,000	13.2	16.2	790	645
4647561	24ANB724A**30	CNPV*3017A**	58UVB060–14	24,600	13.2	16.1	725	500
4647580	24ANB724A**30	CNPV*3017A**	58VLR105–12	25,200	13.0	16.3	880	550
4647579	24ANB724A**30	CNPV*3017A**	58VMR105–12	25,000	13.0	16.0	800	485
4647387	24ANB724A**30	CNPV*3017A**	OVLAAB036098	25,000	12.7	16.1	865	530
4647386	24ANB724A**30	CNPV*3017A**	OVMAAB036098	24,600	13.0	16.2	725	550
4647388	24ANB724A**30	CNPV*3017A**	OVMAAB042112	24,400	13.0	16.4	690	580
4647305	24ANB724A**30	CNPV*3017A**+TDR		24,000	11.9	14.0	700	560
4647451	24ANB724A**30	CNPV*3017A**+UI	58CV(A,X)070–12	24,600	13.0	16.2	700	560
4647452	24ANB724A**30	CNPV*3017A**+UI	58CV(A,X)090–16	24,600	13.3	16.5	700	560
4647450	24ANB724A**30	CNPV*3017A**+UI	58MV(B,C)060–14	24,600	13.3	16.3	700	560
4647353	24ANB724A**30	CNPV*3117A**	58MEC060–12	25,600	13.2	16.5	800	655
4647562	24ANB724A**30	CNPV*3117A**	58UVB060–14	25,200	13.5	16.4	725	500
4647582	24ANB724A**30	CNPV*3117A**	58VLR105–12	25,800	13.3	16.5	880	550
4647581	24ANB724A**30	CNPV*3117A**	58VMR105–12	25,400	13.0	16.5	800	485
4647390	24ANB724A**30	CNPV*3117A**	OVLAAB036098	25,600	13.0	16.4	865	530
4647389	24ANB724A**30	CNPV*3117A**	OVMAAB036098	25,000	13.0	16.5	725	550
4647391	24ANB724A**30	CNPV*3117A**	OVMAAB042112	25,000	13.2	16.7	690	580
4647306	24ANB724A**30	CNPV*3117A**+TDR		24,400	12.1	14.3	700	560
4647454	24ANB724A**30	CNPV*3117A**+UI	58CV(A,X)070–12	25,000	13.2	16.5	700	560
4647455	24ANB724A**30	CNPV*3117A**+UI	58CV(A,X)090–16	25,000	13.5	16.5	700	560
4647453	24ANB724A**30	CNPV*3117A**+UI	58MV(B,C)060–14	25,000	13.5	16.5	700	560
4647563	24ANB724A**30	CNPV*3617A**	58UVB060–14	24,600	13.2	16.1	725	500
4647584	24ANB724A**30	CNPV*3617A**	58VLR105–12	25,200	13.0	16.3	880	550
4647583	24ANB724A**30	CNPV*3617A**	58VMR105–12	25,000	13.0	16.0	800	485
4647393	24ANB724A**30	CNPV*3617A**	OVLAAB036098	25,000	12.7	16.1	865	530
4647392	24ANB724A**30	CNPV*3617A**	OVMAAB036098	24,600	13.0	16.2	725	550
4647394	24ANB724A**30	CNPV*3617A**	OVMAAB042112	24,400	13.0	16.4	690	580
4647307	24ANB724A**30	CNPV*3617A**+TDR		24,000	11.9	14.0	700	560
4647457	24ANB724A**30	CNPV*3617A**+UI	58CV(A,X)070–12	24,600	13.0	16.2	700	560
4647458	24ANB724A**30	CNPV*3617A**+UI	58CV(A,X)090–16	24,600	13.3	16.5	700	560

See notes on page 25

COMBINATION RATINGS CONTINUED

AHRI Ref. Number	Model Number	Indoor Coil Model Number	Furnace Model Number	AHRI Standard Ratings – Cooling				
				Cooling Capacity	EER	SEER	ID CFM	
							High	Low
4647456	24ANB724A**30	CNPV*3617A**+UI	58MV(B,C)060–14	24,600	13.3	16.3	700	560
4647354	24ANB724A**30	CNPV*3621A**	58MEB040–12	25,000	13.4	16.5	780	680
4647355	24ANB724A**30	CNPV*3621A**	58MEC060–12	25,000	13.2	16.2	790	650
4647564	24ANB724A**30	CNPV*3621A**	58UVB060–14	24,600	13.0	16.0	725	500
4647565	24ANB724A**30	CNPV*3621A**	58UVB080–14	24,200	13.0	16.0	660	490
4647566	24ANB724A**30	CNPV*3621A**	58UVB080–20	25,000	13.0	16.0	840	630
4647567	24ANB724A**30	CNPV*3621A**	58UVB100–20	24,800	13.0	16.2	800	665
4647586	24ANB724A**30	CNPV*3621A**	58VLR105–12	25,200	13.0	16.2	880	550
4647585	24ANB724A**30	CNPV*3621A**	58VMR105–12	25,000	13.0	16.0	800	485
4647396	24ANB724A**30	CNPV*3621A**	OVLAAB036098	25,000	12.7	16.2	865	530
4647395	24ANB724A**30	CNPV*3621A**	OVMAAB036098	24,600	13.0	16.2	725	550
4647397	24ANB724A**30	CNPV*3621A**	OVMAAB042112	24,400	13.0	16.4	690	580
4647463	24ANB724A**30	CNPV*3621A**+UI	58CV(A,X)090–16	24,600	13.2	16.2	700	560
4647464	24ANB724A**30	CNPV*3621A**+UI	58CV(A,X)110–20	24,600	13.0	16.2	705	705
4647459	24ANB724A**30	CNPV*3621A**+UI	58MV(B,C)060–14	24,600	13.0	16.2	700	560
4647460	24ANB724A**30	CNPV*3621A**+UI	58MV(B,C)080–14	24,400	13.0	16.0	700	560
4647461	24ANB724A**30	CNPV*3621A**+UI	58MV(B,C)080–20	24,400	13.0	16.0	700	665
4647462	24ANB724A**30	CNPV*3621A**+UI	58MV(B,C)100–20	24,400	13.0	16.3	700	680
4647356	24ANB724A**30	CNPV*3717A**	58MEC060–12	25,800	13.5	17.0	810	680
4647568	24ANB724A**30	CNPV*3717A**	58UVB060–14	25,400	13.7	16.6	725	500
4647588	24ANB724A**30	CNPV*3717A**	58VLR105–12	26,000	13.5	16.5	880	550
4647587	24ANB724A**30	CNPV*3717A**	58VMR105–12	25,800	13.5	16.5	800	485
4647399	24ANB724A**30	CNPV*3717A**	OVLAAB036098	25,800	13.2	16.6	865	530
4647398	24ANB724A**30	CNPV*3717A**	OVMAAB036098	25,200	13.2	16.7	725	550
4647602	24ANB724A**30	CNPV*3717A**	OVMAAB042112	26,000	13.5	17.0	875	785
4647308	24ANB724A**30	CNPV*3717A**+TDR		24,600	12.1	14.5	700	560
4647466	24ANB724A**30	CNPV*3717A**+UI	58CV(A,X)070–12	25,200	13.5	16.5	700	560
4647467	24ANB724A**30	CNPV*3717A**+UI	58CV(A,X)090–16	25,200	13.6	16.5	700	560
4647465	24ANB724A**30	CNPV*3717A**+UI	58MV(B,C)060–14	25,200	13.7	16.8	700	560
4647321	24ANB724A**30	CSPH*2412A**	58HDV040––12	24,400	12.7	15.9	705	540
4647322	24ANB724A**30	CSPH*2412A**	58HDV060––12	24,600	12.7	15.9	735	565
4647362	24ANB724A**30	CSPH*2412A**	58MEB040–12	24,600	13.2	16.4	710	585
4647363	24ANB724A**30	CSPH*2412A**	58MEC060–12	24,800	13.0	16.0	725	545
4647320	24ANB724A**30	CSPH*2412A**	58PH*045–08	24,400	12.9	16.0	685	555
4647551	24ANB724A**30	CSPH*2412A**	58VLR105–12	24,600	13.0	16.0	715	470
4647596	24ANB724A**30	CSPH*2412A**	58VMR105–12	25,000	12.8	16.0	800	485
4647413	24ANB724A**30	CSPH*2412A**	OVLAAB036098	25,000	12.2	16.0	865	530
4647412	24ANB724A**30	CSPH*2412A**	OVMAAB036098	24,600	12.7	16.1	725	550
4647414	24ANB724A**30	CSPH*2412A**	OVMAAB042112	24,400	13.0	16.2	690	580
4647319	24ANB724A**30	CSPH*2412A**+TDR		24,000	11.9	14.2	700	560
4647518	24ANB724A**30	CSPH*2412A**+UI	58CV(A,X)070–12	24,600	13.0	16.0	700	560
4647519	24ANB724A**30	CSPH*2412A**+UI	58CV(A,X)090–16	24,600	13.2	16.0	700	560
4647520	24ANB724A**30	CSPH*2412A**+UI	58CV(A,X)110–20	24,600	13.0	16.0	705	705
4647521	24ANB724A**30	CSPH*2412A**+UI	58CV(A,X)135–22	24,600	13.0	16.0	700	680
4647522	24ANB724A**30	CSPH*2412A**+UI	58CV(A,X)155–22	24,600	13.0	16.2	700	680
4647513	24ANB724A**30	CSPH*2412A**+UI	58MV(B,C)060–14	24,600	13.1	16.0	700	560
4647514	24ANB724A**30	CSPH*2412A**+UI	58MV(B,C)080–14	24,600	13.0	16.0	700	560
4647515	24ANB724A**30	CSPH*2412A**+UI	58MV(B,C)080–20	24,600	13.0	16.0	700	665
4647516	24ANB724A**30	CSPH*2412A**+UI	58MV(B,C)100–20	24,600	13.0	16.0	700	680
4647517	24ANB724A**30	CSPH*2412A**+UI	58MV(B,C)120–20	24,600	13.0	16.0	700	680
4647512	24ANB724A**30	CSPH*2412A**+UI	58MVB040–14	24,600	13.0	16.0	700	560
4647325	24ANB724A**30	CSPH*3012A**	58HDV040––12	24,600	12.8	16.0	735	570
4647326	24ANB724A**30	CSPH*3012A**	58HDV060––12	24,800	12.8	16.0	780	605
4647364	24ANB724A**30	CSPH*3012A**	58MEB040–12	24,800	13.3	16.5	750	640
4647365	24ANB724A**30	CSPH*3012A**	58MEC060–12	25,000	13.0	16.2	765	605
4647324	24ANB724A**30	CSPH*3012A**	58PH*045–08	24,600	13.0	16.0	715	580
4647598	24ANB724A**30	CSPH*3012A**	58VLR105–12	25,400	13.0	16.2	880	550
4647597	24ANB724A**30	CSPH*3012A**	58VMR105–12	25,000	13.0	16.0	800	485
4647416	24ANB724A**30	CSPH*3012A**	OVLAAB036098	25,200	12.7	16.2	865	530
4647415	24ANB724A**30	CSPH*3012A**	OVMAAB036098	24,600	13.0	16.3	725	550
4647417	24ANB724A**30	CSPH*3012A**	OVMAAB042112	24,600	13.0	16.5	690	580
4647323	24ANB724A**30	CSPH*3012A**+TDR		24,000	11.9	14.0	700	560
4647529	24ANB724A**30	CSPH*3012A**+UI	58CV(A,X)070–12	24,600	13.1	16.0	700	560
4647530	24ANB724A**30	CSPH*3012A**+UI	58CV(A,X)090–16	24,800	13.3	16.0	700	560
4647531	24ANB724A**30	CSPH*3012A**+UI	58CV(A,X)110–20	24,800	13.0	16.2	705	705
4647532	24ANB724A**30	CSPH*3012A**+UI	58CV(A,X)135–22	24,800	13.2	16.2	700	680
4647533	24ANB724A**30	CSPH*3012A**+UI	58CV(A,X)155–22	24,800	13.2	16.5	700	680
4647524	24ANB724A**30	CSPH*3012A**+UI	58MV(B,C)060–14	24,600	13.3	16.5	700	560
4647525	24ANB724A**30	CSPH*3012A**+UI	58MV(B,C)080–14	24,600	13.0	16.2	700	560
4647526	24ANB724A**30	CSPH*3012A**+UI	58MV(B,C)080–20	24,600	13.0	16.0	700	665
4647527	24ANB724A**30	CSPH*3012A**+UI	58MV(B,C)100–20	24,600	13.0	16.2	700	680

See notes on page 25

COMBINATION RATINGS CONTINUED

AHRI Ref. Number	Model Number	Indoor Coil Model Number	Furnace Model Number	AHRI Standard Ratings – Cooling				
				Cooling Capacity	EER	SEER	ID CFM	
							High	Low
4647528	24ANB724A**30	CSPH*3012A**+UI	58MV(B,C)120–20	24,600	13.0	16.2	700	680
4647523	24ANB724A**30	CSPH*3012A**+UI	58MVB040–14	24,600	13.1	16.0	700	560
4647329	24ANB724A**30	CSPH*3612A**	58HDV040––12	25,000	13.0	16.2	755	585
4647330	24ANB724A**30	CSPH*3612A**	58HDV060––12	25,400	13.1	16.3	815	630
4647366	24ANB724A**30	CSPH*3612A**	58MEB040–12	25,400	13.6	16.8	780	675
4647367	24ANB724A**30	CSPH*3612A**	58MEC060–12	25,400	13.2	16.5	795	640
4647328	24ANB724A**30	CSPH*3612A**	58PH*045–08	25,000	13.3	16.3	735	590
4647600	24ANB724A**30	CSPH*3612A**	58VLR105–12	25,600	13.0	16.2	880	550
4647599	24ANB724A**30	CSPH*3612A**	58VMR105–12	25,400	13.0	16.4	800	485
4647419	24ANB724A**30	CSPH*3612A**	OVLAAB036098	25,600	13.0	16.2	865	530
4647418	24ANB724A**30	CSPH*3612A**	OVMAAB036098	25,000	13.0	16.4	725	550
4647420	24ANB724A**30	CSPH*3612A**	OVMAAB042112	24,800	13.2	16.6	690	580
4647327	24ANB724A**30	CSPH*3612A**+TDR		24,400	12.0	14.3	700	560
4647540	24ANB724A**30	CSPH*3612A**+UI	58CV(A,X)070–12	25,000	13.3	16.5	700	560
4647541	24ANB724A**30	CSPH*3612A**+UI	58CV(A,X)090–16	25,000	13.5	16.5	700	560
4647542	24ANB724A**30	CSPH*3612A**+UI	58CV(A,X)110–20	25,000	13.2	16.5	705	705
4647543	24ANB724A**30	CSPH*3612A**+UI	58CV(A,X)135–22	25,000	13.2	16.5	700	680
4647544	24ANB724A**30	CSPH*3612A**+UI	58CV(A,X)155–22	25,000	13.5	16.5	700	680
4647535	24ANB724A**30	CSPH*3612A**+UI	58MV(B,C)060–14	25,000	13.5	16.5	700	560
4647536	24ANB724A**30	CSPH*3612A**+UI	58MV(B,C)080–14	25,000	13.4	16.5	700	560
4647537	24ANB724A**30	CSPH*3612A**+UI	58MV(B,C)080–20	25,000	13.2	16.2	700	665
4647538	24ANB724A**30	CSPH*3612A**+UI	58MV(B,C)100–20	25,000	13.2	16.2	700	680
4647539	24ANB724A**30	CSPH*3612A**+UI	58MV(B,C)120–20	25,000	13.2	16.5	700	680
4647534	24ANB724A**30	CSPH*3612A**+UI	58MVB040–14	25,000	13.3	16.5	700	560
4647546	24ANB724A**30	FE4AN(B,F)003+UI		24,600	13.5	16.6	700	560
4647545	24ANB724A**30	FE4ANF002+UI		24,600	13.3	16.5	700	560
4647547	24ANB724A**30	FE5ANB004+UI		25,400	13.5	17.0	700	560
4647332	24ANB724A**30	FV4CN(B,F)003		24,600	13.5	16.5	700	560
4647331	24ANB724A**30	FV4CNF002		24,600	13.3	16.5	700	560
4647603	24ANB736A**30	†FV4CNB006		37,200	13.7	17.7	1050	840
4647605	24ANB736A**30	CAP**3614A**+TDR		34,600	11.8	14.5	1050	840
4647767	24ANB736A**30	CAP**3614A**+UI	58CV(A,X)070–12	35,000	12.4	16.0	1050	840
4647658	24ANB736A**30	CAP**3617A**	58MEC060–12	35,400	12.7	16.2	1080	955
4647659	24ANB736A**30	CAP**3617A**	58MEC080–12	35,200	12.7	16.5	1055	925
4647660	24ANB736A**30	CAP**3617A**	58MEC080–16	35,400	12.7	16.0	1080	985
4647947	24ANB736A**30	CAP**3617A**	58UVB060–14	35,200	12.5	16.2	1055	870
4647686	24ANB736A**30	CAP**3617A**	58VLR105–12	35,200	12.5	16.0	1065	880
4647685	24ANB736A**30	CAP**3617A**	58VMR105–12	34,800	12.6	16.0	975	800
4647717	24ANB736A**30	CAP**3617A**	OVMAAB042112	35,000	12.5	16.2	1035	825
4647606	24ANB736A**30	CAP**3617A**+TDR		34,600	11.8	14.5	1050	840
4647770	24ANB736A**30	CAP**3617A**+UI	58CV(A,X)070–12	35,200	12.2	16.2	1050	840
4647771	24ANB736A**30	CAP**3617A**+UI	58CV(A,X)090–16	35,200	12.8	16.5	1050	840
4647768	24ANB736A**30	CAP**3617A**+UI	58MV(B,C)060–14	35,200	12.7	16.5	1050	840
4647769	24ANB736A**30	CAP**3617A**+UI	58MV(B,C)080–14	35,200	12.5	16.5	1050	840
4647632	24ANB736A**30	CAP**3619A**	58HDV040––12	34,800	12.0	15.5	1055	815
4647633	24ANB736A**30	CAP**3619A**	58HDV060––12	35,200	12.0	16.0	1100	785
4647969	24ANB736A**30	CAP**3619A**	58UVB060–14	35,200	12.5	16.2	1055	870
4647970	24ANB736A**30	CAP**3619A**	58UVB080–14	35,000	12.2	16.2	1030	820
4647971	24ANB736A**30	CAP**3619A**	58UVB080–20	35,000	12.5	16.2	1010	840
4647972	24ANB736A**30	CAP**3619A**	58UVB100–20	35,200	12.5	16.2	1040	800
4647730	24ANB736A**30	CAP**3619A**	OVLAAB048112	35,200	12.5	16.0	1085	880
4647729	24ANB736A**30	CAP**3619A**	OVMAAB042112	35,000	12.5	16.2	1035	825
4647631	24ANB736A**30	CAP**3619A**+TDR		34,600	11.8	14.5	1050	840
4647809	24ANB736A**30	CAP**3619A**+UI	58CV(A,X)090–16	35,200	13.0	16.5	1050	840
4647810	24ANB736A**30	CAP**3619A**+UI	58CV(A,X)110–20	35,200	13.0	16.5	1050	840
4647805	24ANB736A**30	CAP**3619A**+UI	58MV(B,C)060–14	35,200	12.5	16.5	1050	840
4647806	24ANB736A**30	CAP**3619A**+UI	58MV(B,C)080–14	35,200	12.5	16.5	1050	840
4647807	24ANB736A**30	CAP**3619A**+UI	58MV(B,C)080–20	35,200	12.5	16.5	1050	840
4647808	24ANB736A**30	CAP**3619A**+UI	58MV(B,C)100–20	35,200	12.5	16.5	1050	840
4647608	24ANB736A**30	CAP**3621A**	58PH*090–16	35,400	12.9	16.5	1085	955
4647948	24ANB736A**30	CAP**3621A**	58UVB060–14	35,200	12.7	16.5	1055	870
4647949	24ANB736A**30	CAP**3621A**	58UVB080–14	35,000	12.5	16.2	1030	820
4647950	24ANB736A**30	CAP**3621A**	58UVB080–20	35,000	12.5	16.2	1010	840
4647951	24ANB736A**30	CAP**3621A**	58UVB100–20	35,200	12.7	16.2	1040	800
4647688	24ANB736A**30	CAP**3621A**	58VLR105–12	35,200	12.5	16.0	1065	880
4647690	24ANB736A**30	CAP**3621A**	58VLR120–20	35,800	12.5	16.5	1170	1005
4647687	24ANB736A**30	CAP**3621A**	58VMR105–12	34,800	12.5	16.5	975	800
4647689	24ANB736A**30	CAP**3621A**	58VMR120–20	35,600	12.5	16.0	1155	1000
4647719	24ANB736A**30	CAP**3621A**	OVLAAB048112	35,200	12.5	16.2	1085	880
4647718	24ANB736A**30	CAP**3621A**	OVMAAB042112	35,000	12.5	16.2	1035	825

See notes on page 25

COMBINATION RATINGS CONTINUED

AHRI Ref. Number	Model Number	Indoor Coil Model Number	Furnace Model Number	AHRI Standard Ratings – Cooling				
				Cooling Capacity	EER	SEER	ID CFM	
							High	Low
4647607	24ANB736A**30	CAP**3621A**+TDR		34,600	11.8	14.5	1050	840
4647776	24ANB736A**30	CAP**3621A**+UI	58CV(A,X)090–16	35,400	13.0	16.5	1050	840
4647777	24ANB736A**30	CAP**3621A**+UI	58CV(A,X)110–20	35,400	12.8	16.5	1050	840
4647772	24ANB736A**30	CAP**3621A**+UI	58MV(B,C)060–14	35,200	13.0	16.5	1050	840
4647773	24ANB736A**30	CAP**3621A**+UI	58MV(B,C)080–14	35,200	12.5	16.2	1050	840
4647774	24ANB736A**30	CAP**3621A**+UI	58MV(B,C)080–20	35,200	12.5	16.5	1050	840
4647775	24ANB736A**30	CAP**3621A**+UI	58MV(B,C)100–20	35,200	12.8	16.5	1050	840
4647610	24ANB736A**30	CAP**4221A**	58PH*090–16	35,800	13.0	16.5	1085	950
4647952	24ANB736A**30	CAP**4221A**	58UVB060–14	35,600	12.7	16.5	1055	870
4647953	24ANB736A**30	CAP**4221A**	58UVB080–14	35,400	12.5	16.2	1030	820
4647954	24ANB736A**30	CAP**4221A**	58UVB080–20	35,200	12.7	16.2	1010	840
4647955	24ANB736A**30	CAP**4221A**	58UVB100–20	35,400	12.7	16.2	1040	800
4647692	24ANB736A**30	CAP**4221A**	58VLR105–12	35,400	12.5	16.5	1065	880
4647694	24ANB736A**30	CAP**4221A**	58VLR120–20	36,000	12.8	16.5	1170	1005
4647691	24ANB736A**30	CAP**4221A**	58VMR105–12	35,000	12.6	16.5	975	800
4647693	24ANB736A**30	CAP**4221A**	58VMR120–20	35,800	12.7	16.5	1155	1000
4647721	24ANB736A**30	CAP**4221A**	OVLAAB048112	35,600	12.5	16.2	1085	880
4647720	24ANB736A**30	CAP**4221A**	OVMAAB042112	35,400	12.5	16.5	1035	825
4647609	24ANB736A**30	CAP**4221A**+TDR		35,000	12.0	14.5	1050	840
4647781	24ANB736A**30	CAP**4221A**+UI	58CV(A,X)090–16	35,600	13.0	17.0	1050	840
4647782	24ANB736A**30	CAP**4221A**+UI	58CV(A,X)110–20	35,600	12.9	16.5	1050	840
4647778	24ANB736A**30	CAP**4221A**+UI	58MV(B,C)060–14	35,600	13.0	16.5	1050	840
4647779	24ANB736A**30	CAP**4221A**+UI	58MV(B,C)080–14	35,400	12.5	16.5	1050	840
4647939	24ANB736A**30	CAP**4221A**+UI	58MV(B,C)080–20	35,200	12.8	16.5	975	780
4647780	24ANB736A**30	CAP**4221A**+UI	58MV(B,C)100–20	35,600	12.8	16.5	1050	840
4647612	24ANB736A**30	CAP**4224A**	58HDV100––20	35,800	12.8	16.5	1140	900
4647956	24ANB736A**30	CAP**4224A**	58UVB080–14	35,400	12.5	16.5	1030	820
4647957	24ANB736A**30	CAP**4224A**	58UVB080–20	35,400	12.7	16.5	1010	840
4647958	24ANB736A**30	CAP**4224A**	58UVB100–20	35,400	12.7	16.5	1040	800
4647959	24ANB736A**30	CAP**4224A**	58UVB120–20	35,400	12.7	16.7	1010	845
4647722	24ANB736A**30	CAP**4224A**	OVLAAB048112	35,600	12.5	16.2	1085	880
4647723	24ANB736A**30	CAP**4224A**	OVLAAB060154	36,400	13.0	16.7	1250	1020
4647611	24ANB736A**30	CAP**4224A**+TDR		35,000	12.0	14.5	1050	840
4647785	24ANB736A**30	CAP**4224A**+UI	58CV(A,X)110–20	35,600	13.0	17.0	1050	840
4647786	24ANB736A**30	CAP**4224A**+UI	58CV(A,X)135–22	35,600	13.0	16.5	1050	840
4647787	24ANB736A**30	CAP**4224A**+UI	58CV(A,X)155–22	35,800	13.2	17.0	1050	840
4647941	24ANB736A**30	CAP**4224A**+UI	58MV(B,C)080–20	35,200	13.0	16.5	975	780
4647783	24ANB736A**30	CAP**4224A**+UI	58MV(B,C)100–20	35,600	13.0	16.5	1050	840
4647784	24ANB736A**30	CAP**4224A**+UI	58MV(B,C)120–20	35,600	13.0	16.5	1050	840
4647940	24ANB736A**30	CAP**4224A**+UI	58MVB040–14	35,200	13.0	16.5	975	780
4647661	24ANB736A**30	CAP**4817A**	58MEC060–12	36,600	13.0	16.7	1085	960
4647662	24ANB736A**30	CAP**4817A**	58MEC080–12	36,400	13.1	17.0	1060	925
4647663	24ANB736A**30	CAP**4817A**	58MEC080–16	36,600	13.0	16.5	1085	990
4647960	24ANB736A**30	CAP**4817A**	58UVB060–14	36,400	12.7	16.7	1055	870
4647696	24ANB736A**30	CAP**4817A**	58VLR105–12	36,400	12.9	16.5	1065	880
4647695	24ANB736A**30	CAP**4817A**	58VMR105–12	35,800	12.9	16.5	975	800
4647724	24ANB736A**30	CAP**4817A**	OVMAAB042112	36,200	12.7	16.7	1035	825
4647613	24ANB736A**30	CAP**4817A**+TDR		35,800	12.0	15.0	1050	840
4647790	24ANB736A**30	CAP**4817A**+UI	58CV(A,X)070–12	36,400	12.7	16.7	1050	840
4647791	24ANB736A**30	CAP**4817A**+UI	58CV(A,X)090–16	36,400	13.1	17.0	1050	840
4647788	24ANB736A**30	CAP**4817A**+UI	58MV(B,C)060–14	36,400	13.0	17.0	1050	840
4647789	24ANB736A**30	CAP**4817A**+UI	58MV(B,C)080–14	36,200	13.0	17.0	1050	840
4647961	24ANB736A**30	CAP**4821A**	58UVB060–14	36,000	12.7	16.7	1055	870
4647962	24ANB736A**30	CAP**4821A**	58UVB080–14	35,800	12.7	16.5	1030	820
4647963	24ANB736A**30	CAP**4821A**	58UVB080–20	35,800	12.7	16.7	1010	840
4647964	24ANB736A**30	CAP**4821A**	58UVB100–20	36,000	12.7	16.5	1040	800
4647698	24ANB736A**30	CAP**4821A**	58VLR105–12	36,000	12.8	16.5	1065	880
4647697	24ANB736A**30	CAP**4821A**	58VMR105–12	35,600	12.8	16.5	975	800
4647726	24ANB736A**30	CAP**4821A**	OVLAAB048112	36,000	12.5	16.5	1085	880
4647725	24ANB736A**30	CAP**4821A**	OVMAAB042112	36,000	12.5	16.7	1035	825
4647614	24ANB736A**30	CAP**4821A**+TDR		35,600	12.0	14.5	1050	840
4647796	24ANB736A**30	CAP**4821A**+UI	58CV(A,X)090–16	36,200	13.0	17.0	1050	840
4647797	24ANB736A**30	CAP**4821A**+UI	58CV(A,X)110–20	36,200	13.0	16.5	1050	840
4647792	24ANB736A**30	CAP**4821A**+UI	58MV(B,C)060–14	36,200	13.0	17.0	1050	840
4647793	24ANB736A**30	CAP**4821A**+UI	58MV(B,C)080–14	36,000	12.8	16.5	1050	840
4647794	24ANB736A**30	CAP**4821A**+UI	58MV(B,C)080–20	36,000	12.9	16.5	1050	840
4647795	24ANB736A**30	CAP**4821A**+UI	58MV(B,C)100–20	36,000	13.0	16.5	1050	840
4647635	24ANB736A**30	CAP**4823A**	58HDV040––12	35,800	12.0	16.0	1070	825
4647636	24ANB736A**30	CAP**4823A**	58HDV060––12	36,000	12.5	16.5	1115	800
4647637	24ANB736A**30	CAP**4823A**	58HDV080––20	36,600	12.5	16.5	1200	935
4647973	24ANB736A**30	CAP**4823A**	58UVB080–14	35,800	12.7	16.5	1030	820

See notes on page 25

COMBINATION RATINGS CONTINUED

AHRI Ref. Number	Model Number	Indoor Coil Model Number	Furnace Model Number	AHRI Standard Ratings – Cooling				
				Cooling Capacity	EER	SEER	ID CFM	
							High	Low
4647974	24ANB736A**30	CAP**4823A**	58UVB080–20	35,800	12.7	16.7	1010	840
4647975	24ANB736A**30	CAP**4823A**	58UVB100–20	36,000	12.7	16.5	1040	800
4647976	24ANB736A**30	CAP**4823A**	58UVB120–20	36,000	13.0	16.7	1010	845
4647731	24ANB736A**30	CAP**4823A**	OVLAAB048112	36,000	12.5	16.5	1085	880
4647634	24ANB736A**30	CAP**4823A**+TDR		35,600	12.0	14.5	1050	840
4647815	24ANB736A**30	CAP**4823A**+UI	58CV(A,X)110–20	36,200	13.0	17.0	1050	840
4647816	24ANB736A**30	CAP**4823A**+UI	58CV(A,X)135–22	36,200	13.0	17.0	1050	840
4647817	24ANB736A**30	CAP**4823A**+UI	58CV(A,X)155–22	36,200	13.0	17.5	1050	840
4647812	24ANB736A**30	CAP**4823A**+UI	58MV(B,C)080–20	36,000	13.0	16.5	1050	840
4647813	24ANB736A**30	CAP**4823A**+UI	58MV(B,C)100–20	36,000	13.0	17.0	1050	840
4647814	24ANB736A**30	CAP**4823A**+UI	58MV(B,C)120–20	36,200	13.0	17.0	1050	840
4647811	24ANB736A**30	CAP**4823A**+UI	58MVB040–14	36,000	13.0	17.0	1050	840
4647965	24ANB736A**30	CAP**4824A**	58UVB080–14	36,000	12.7	16.7	1030	820
4647966	24ANB736A**30	CAP**4824A**	58UVB080–20	35,800	12.7	16.7	1010	840
4647967	24ANB736A**30	CAP**4824A**	58UVB100–20	36,000	12.7	16.7	1040	800
4647968	24ANB736A**30	CAP**4824A**	58UVB120–20	36,000	13.0	16.7	1010	845
4647727	24ANB736A**30	CAP**4824A**	OVLAAB048112	36,200	12.5	16.5	1085	880
4647728	24ANB736A**30	CAP**4824A**	OVLAAB060154	37,000	13.0	17.0	1250	1020
4647615	24ANB736A**30	CAP**4824A**+TDR		35,600	12.0	14.5	1050	840
4647802	24ANB736A**30	CAP**4824A**+UI	58CV(A,X)110–20	36,200	13.0	17.0	1050	840
4647803	24ANB736A**30	CAP**4824A**+UI	58CV(A,X)135–22	36,200	13.2	17.0	1050	840
4647804	24ANB736A**30	CAP**4824A**+UI	58CV(A,X)155–22	36,200	13.3	17.0	1050	840
4647799	24ANB736A**30	CAP**4824A**+UI	58MV(B,C)080–20	36,000	13.0	17.0	1050	840
4647800	24ANB736A**30	CAP**4824A**+UI	58MV(B,C)100–20	36,000	13.0	17.0	1050	840
4647801	24ANB736A**30	CAP**4824A**+UI	58MV(B,C)120–20	36,200	13.1	17.0	1050	840
4647798	24ANB736A**30	CAP**4824A**+UI	58MVB040–14	36,000	13.0	17.0	1050	840
4647638	24ANB736A**30	CAP**6025A**	58HDV080––20	37,200	13.0	17.0	1220	950
4647639	24ANB736A**30	CAP**6025A**	58HDV100––20	37,000	13.0	17.0	1140	900
4647673	24ANB736A**30	CNPH*3617A**	58MEC060–12	35,200	12.6	16.2	1055	935
4647674	24ANB736A**30	CNPH*3617A**	58MEC080–12	35,000	12.7	16.0	1035	905
4647675	24ANB736A**30	CNPH*3617A**	58MEC080–16	35,200	12.6	16.0	1055	965
4647625	24ANB736A**30	CNPH*3617A**	58PH*090–16	35,200	12.7	16.0	1035	905
4647746	24ANB736A**30	CNPH*3617A**	OVLAAB048112	35,000	12.0	16.0	1085	880
4647747	24ANB736A**30	CNPH*3617A**	OVLAAB060154	35,800	12.5	16.2	1250	1020
4647745	24ANB736A**30	CNPH*3617A**	OVMAAB042112	35,000	12.5	16.2	1035	825
4647624	24ANB736A**30	CNPH*3617A**+TDR		34,600	11.8	14.5	1050	840
4647866	24ANB736A**30	CNPH*3617A**+UI	58CV(A,X)070–12	35,000	12.2	16.2	1050	840
4647867	24ANB736A**30	CNPH*3617A**+UI	58CV(A,X)090–16	35,200	12.7	16.5	1050	840
4647868	24ANB736A**30	CNPH*3617A**+UI	58CV(A,X)110–20	35,200	12.5	16.5	1050	840
4647869	24ANB736A**30	CNPH*3617A**+UI	58CV(A,X)135–22	35,200	13.0	16.5	1050	840
4647870	24ANB736A**30	CNPH*3617A**+UI	58CV(A,X)155–22	35,200	12.8	16.5	1050	840
4647861	24ANB736A**30	CNPH*3617A**+UI	58MV(B,C)060–14	35,200	12.5	16.0	1050	840
4647862	24ANB736A**30	CNPH*3617A**+UI	58MV(B,C)080–14	35,000	12.4	16.0	1050	840
4647863	24ANB736A**30	CNPH*3617A**+UI	58MV(B,C)080–20	35,000	12.5	16.0	1050	840
4647864	24ANB736A**30	CNPH*3617A**+UI	58MV(B,C)100–20	35,200	12.6	16.0	1050	840
4647865	24ANB736A**30	CNPH*3617A**+UI	58MV(B,C)120–20	35,200	12.7	16.5	1050	840
4647860	24ANB736A**30	CNPH*3617A**+UI	58MVB040–14	35,000	12.5	16.0	1050	840
4647676	24ANB736A**30	CNPH*4221A**	58MEC060–12	35,600	12.8	16.2	1080	950
4647677	24ANB736A**30	CNPH*4221A**	58MEC080–12	35,600	12.8	16.5	1055	920
4647678	24ANB736A**30	CNPH*4221A**	58MEC080–16	35,600	12.8	16.5	1075	980
4647627	24ANB736A**30	CNPH*4221A**	58PH*090–16	35,600	12.9	16.5	1055	925
4647749	24ANB736A**30	CNPH*4221A**	OVLAAB048112	35,600	12.5	16.2	1085	880
4647750	24ANB736A**30	CNPH*4221A**	OVLAAB060154	36,400	12.5	16.5	1250	1020
4647748	24ANB736A**30	CNPH*4221A**	OVMAAB042112	35,400	12.5	16.2	1035	825
4647626	24ANB736A**30	CNPH*4221A**+TDR		35,000	11.9	14.5	1050	840
4647876	24ANB736A**30	CNPH*4221A**+UI	58CV(A,X)070–12	35,400	12.6	16.0	1050	840
4647877	24ANB736A**30	CNPH*4221A**+UI	58CV(A,X)090–16	35,600	12.9	16.5	1050	840
4647878	24ANB736A**30	CNPH*4221A**+UI	58CV(A,X)110–20	35,600	12.9	16.5	1050	840
4647879	24ANB736A**30	CNPH*4221A**+UI	58CV(A,X)135–22	35,600	13.0	17.0	1050	840
4647880	24ANB736A**30	CNPH*4221A**+UI	58CV(A,X)155–22	35,800	13.0	17.0	1050	840
4647872	24ANB736A**30	CNPH*4221A**+UI	58MV(B,C)060–14	35,600	12.8	16.5	1050	840
4647873	24ANB736A**30	CNPH*4221A**+UI	58MV(B,C)080–14	35,400	12.6	16.5	1050	840
4647874	24ANB736A**30	CNPH*4221A**+UI	58MV(B,C)080–20	35,600	12.7	16.5	1050	840
4647944	24ANB736A**30	CNPH*4221A**+UI	58MV(B,C)100–20	35,200	12.8	16.0	975	780
4647875	24ANB736A**30	CNPH*4221A**+UI	58MV(B,C)120–20	35,600	13.0	16.5	1050	840
4647871	24ANB736A**30	CNPH*4221A**+UI	58MVB040–14	35,600	12.5	16.5	1050	840
4647752	24ANB736A**30	CNPH*4321A**	OVLAAB048112	36,600	13.0	16.7	1085	880
4647753	24ANB736A**30	CNPH*4321A**	OVLAAB060154	37,000	13.0	17.2	1250	1020
4647751	24ANB736A**30	CNPH*4321A**	OVMAAB042112	36,400	13.0	17.0	1035	825
4647887	24ANB736A**30	CNPH*4321A**+UI	58CV(A,X)070–12	36,600	13.0	17.0	1050	840
4647888	24ANB736A**30	CNPH*4321A**+UI	58CV(A,X)090–16	36,800	13.0	17.5	1050	840

See notes on page 25

COMBINATION RATINGS CONTINUED

AHRI Ref. Number	Model Number	Indoor Coil Model Number	Furnace Model Number	AHRI Standard Ratings – Cooling				
				Cooling Capacity	EER	SEER	ID CFM	
							High	Low
4647889	24ANB736A**30	CNPH*4321A**+UI	58CV(A,X)110–20	36,800	13.0	17.5	1050	840
4647890	24ANB736A**30	CNPH*4321A**+UI	58CV(A,X)135–22	36,800	13.0	17.5	1050	840
4647891	24ANB736A**30	CNPH*4321A**+UI	58CV(A,X)155–22	36,800	13.5	17.5	1050	840
4647882	24ANB736A**30	CNPH*4321A**+UI	58MV(B,C)060–14	36,600	13.0	17.0	1050	840
4647883	24ANB736A**30	CNPH*4321A**+UI	58MV(B,C)080–14	36,600	13.0	17.0	1050	840
4647884	24ANB736A**30	CNPH*4321A**+UI	58MV(B,C)080–20	36,600	13.0	17.0	1050	840
4647885	24ANB736A**30	CNPH*4321A**+UI	58MV(B,C)100–20	36,600	13.0	17.0	1050	840
4647886	24ANB736A**30	CNPH*4321A**+UI	58MV(B,C)120–20	36,600	13.0	17.0	1050	840
4647881	24ANB736A**30	CNPH*4321A**+UI	58MVB040–14	36,600	13.0	17.0	1050	840
4647679	24ANB736A**30	CNPH*4821A**	58MEC060–12	36,400	13.1	16.7	1115	985
4647680	24ANB736A**30	CNPH*4821A**	58MEC080–12	36,400	13.1	17.0	1085	945
4647681	24ANB736A**30	CNPH*4821A**	58MEC080–16	36,400	13.1	16.5	1110	1010
4647755	24ANB736A**30	CNPH*4821A**	OVLAAB048112	36,200	12.5	16.5	1085	880
4647756	24ANB736A**30	CNPH*4821A**	OVLAAB060154	37,000	13.0	17.0	1250	1020
4647754	24ANB736A**30	CNPH*4821A**	OVMAAB042112	36,000	13.0	16.7	1035	825
4647628	24ANB736A**30	CNPH*4821A**+TDR		35,600	12.1	14.5	1050	840
4647898	24ANB736A**30	CNPH*4821A**+UI	58CV(A,X)070–12	36,200	12.7	16.7	1050	840
4647899	24ANB736A**30	CNPH*4821A**+UI	58CV(A,X)090–16	36,200	13.1	17.0	1050	840
4647900	24ANB736A**30	CNPH*4821A**+UI	58CV(A,X)110–20	36,200	13.1	17.0	1050	840
4647901	24ANB736A**30	CNPH*4821A**+UI	58CV(A,X)135–22	36,400	13.2	17.0	1050	840
4647902	24ANB736A**30	CNPH*4821A**+UI	58CV(A,X)155–22	36,400	13.4	17.0	1050	840
4647893	24ANB736A**30	CNPH*4821A**+UI	58MV(B,C)060–14	36,200	13.0	17.0	1050	840
4647894	24ANB736A**30	CNPH*4821A**+UI	58MV(B,C)080–14	36,000	12.9	16.5	1050	840
4647895	24ANB736A**30	CNPH*4821A**+UI	58MV(B,C)080–20	36,200	13.0	16.5	1050	840
4647896	24ANB736A**30	CNPH*4821A**+UI	58MV(B,C)100–20	36,200	13.0	16.5	1050	840
4647897	24ANB736A**30	CNPH*4821A**+UI	58MV(B,C)120–20	36,200	13.2	17.0	1050	840
4647892	24ANB736A**30	CNPH*4821A**+UI	58MVB040–14	36,200	13.0	17.0	1050	840
4647664	24ANB736A**30	CNPV*3617A**	58MEC060–12	35,200	12.6	16.2	1055	935
4647665	24ANB736A**30	CNPV*3617A**	58MEC080–12	35,000	12.7	16.0	1035	905
4647666	24ANB736A**30	CNPV*3617A**	58MEC080–16	35,200	12.6	16.0	1055	965
4647977	24ANB736A**30	CNPV*3617A**	58UVB060–14	35,200	12.5	16.2	1055	870
4647700	24ANB736A**30	CNPV*3617A**	58VLR105–12	35,000	12.4	16.0	1065	880
4647699	24ANB736A**30	CNPV*3617A**	58VMR105–12	34,600	12.4	16.0	975	800
4647732	24ANB736A**30	CNPV*3617A**	OVMAAB042112	35,000	12.2	16.2	1035	825
4647616	24ANB736A**30	CNPV*3617A**+TDR		34,600	11.8	14.5	1050	840
4647820	24ANB736A**30	CNPV*3617A**+UI	58CV(A,X)070–12	35,000	12.2	16.2	1050	840
4647821	24ANB736A**30	CNPV*3617A**+UI	58CV(A,X)090–16	35,200	12.7	16.5	1050	840
4647818	24ANB736A**30	CNPV*3617A**+UI	58MV(B,C)060–14	35,200	12.5	16.0	1050	840
4647819	24ANB736A**30	CNPV*3617A**+UI	58MV(B,C)080–14	35,000	12.5	16.0	1050	840
4647618	24ANB736A**30	CNPV*3621A**	58PH*090–16	35,200	12.8	16.0	1045	910
4647978	24ANB736A**30	CNPV*3621A**	58UVB060–14	35,200	12.5	16.2	1055	870
4647979	24ANB736A**30	CNPV*3621A**	58UVB080–14	35,000	12.2	16.0	1030	820
4647980	24ANB736A**30	CNPV*3621A**	58UVB080–20	34,800	12.5	16.0	1010	840
4647981	24ANB736A**30	CNPV*3621A**	58UVB100–20	35,000	12.5	16.0	1040	800
4647702	24ANB736A**30	CNPV*3621A**	58VLR105–12	35,000	12.4	16.0	1065	880
4647701	24ANB736A**30	CNPV*3621A**	58VMR105–12	34,600	12.5	16.0	975	800
4647734	24ANB736A**30	CNPV*3621A**	OVLAAB048112	35,000	12.0	16.0	1085	880
4647733	24ANB736A**30	CNPV*3621A**	OVMAAB042112	35,000	12.5	16.2	1035	825
4647617	24ANB736A**30	CNPV*3621A**+TDR		34,600	11.8	14.5	1050	840
4647826	24ANB736A**30	CNPV*3621A**+UI	58CV(A,X)090–16	35,200	12.5	16.5	1050	840
4647827	24ANB736A**30	CNPV*3621A**+UI	58CV(A,X)110–20	35,200	12.7	16.5	1050	840
4647822	24ANB736A**30	CNPV*3621A**+UI	58MV(B,C)060–14	35,200	12.5	16.5	1050	840
4647823	24ANB736A**30	CNPV*3621A**+UI	58MV(B,C)080–14	35,000	12.4	16.0	1050	840
4647824	24ANB736A**30	CNPV*3621A**+UI	58MV(B,C)080–20	35,200	12.5	16.0	1050	840
4647825	24ANB736A**30	CNPV*3621A**+UI	58MV(B,C)100–20	35,200	12.6	16.0	1050	840
4647667	24ANB736A**30	CNPV*3717A**	58MEC060–12	36,800	13.1	17.0	1090	965
4647668	24ANB736A**30	CNPV*3717A**	58MEC080–12	36,600	13.2	17.0	1060	930
4647669	24ANB736A**30	CNPV*3717A**	58MEC080–16	36,800	13.1	17.0	1085	990
4647982	24ANB736A**30	CNPV*3717A**	58UVB060–14	36,600	13.0	17.0	1055	870
4647704	24ANB736A**30	CNPV*3717A**	58VLR105–12	36,600	13.0	16.5	1065	880
4647703	24ANB736A**30	CNPV*3717A**	58VMR105–12	36,200	13.0	16.5	975	800
4647735	24ANB736A**30	CNPV*3717A**	OVMAAB042112	36,400	13.0	17.0	1035	825
4647619	24ANB736A**30	CNPV*3717A**+TDR		36,000	12.0	15.0	1050	840
4647830	24ANB736A**30	CNPV*3717A**+UI	58CV(A,X)070–12	36,600	13.0	16.7	1050	840
4647831	24ANB736A**30	CNPV*3717A**+UI	58CV(A,X)090–16	36,600	13.2	17.0	1050	840
4647828	24ANB736A**30	CNPV*3717A**+UI	58MV(B,C)060–14	36,600	13.1	17.0	1050	840
4647829	24ANB736A**30	CNPV*3717A**+UI	58MV(B,C)080–14	36,600	13.0	17.0	1050	840
4647670	24ANB736A**30	CNPV*4217A**	58MEC060–12	36,000	12.9	16.5	1075	950
4647671	24ANB736A**30	CNPV*4217A**	58MEC080–12	35,800	12.9	16.5	1050	920
4647672	24ANB736A**30	CNPV*4217A**	58MEC080–16	36,000	12.9	16.5	1075	980
4647983	24ANB736A**30	CNPV*4217A**	58UVB060–14	35,800	12.7	16.5	1055	870

See notes on page 25

COMBINATION RATINGS CONTINUED

AHRI Ref. Number	Model Number	Indoor Coil Model Number	Furnace Model Number	AHRI Standard Ratings – Cooling				
				Cooling Capacity	EER	SEER	ID CFM	
							High	Low
4647706	24ANB736A**30	CNPV*4217A**	58VLR105–12	35,800	12.5	16.5	1065	880
4647705	24ANB736A**30	CNPV*4217A**	58VMR105–12	35,400	12.7	16.5	975	800
4647736	24ANB736A**30	CNPV*4217A**	OVMAAB042112	35,600	12.5	16.5	1035	825
4647620	24ANB736A**30	CNPV*4217A**+TDR		35,400	12.0	14.5	1050	840
4647942	24ANB736A**30	CNPV*4217A**+UI	58CV(A,X)070–12	35,400	12.5	16.5	975	780
4647834	24ANB736A**30	CNPV*4217A**+UI	58CV(A,X)090–16	36,000	12.9	16.5	1050	840
4647832	24ANB736A**30	CNPV*4217A**+UI	58MV(B,C)060–14	36,000	12.8	16.0	1050	840
4647833	24ANB736A**30	CNPV*4217A**+UI	58MV(B,C)080–14	35,800	12.5	16.5	1050	840
4647984	24ANB736A**30	CNPV*4221A**	58UVB060–14	35,600	12.7	16.5	1055	870
4647985	24ANB736A**30	CNPV*4221A**	58UVB080–14	35,400	12.5	16.2	1030	820
4647986	24ANB736A**30	CNPV*4221A**	58UVB080–20	35,400	12.5	16.2	1010	840
4647987	24ANB736A**30	CNPV*4221A**	58UVB100–20	35,400	12.7	16.2	1040	800
4647708	24ANB736A**30	CNPV*4221A**	58VLR105–12	35,600	12.6	16.0	1065	880
4647710	24ANB736A**30	CNPV*4221A**	58VLR120–20	36,000	12.7	16.5	1170	1005
4647707	24ANB736A**30	CNPV*4221A**	58VMR105–12	35,000	12.6	16.5	975	800
4647709	24ANB736A**30	CNPV*4221A**	58VMR120–20	36,000	12.5	16.0	1155	1000
4647738	24ANB736A**30	CNPV*4221A**	OVLAAB048112	35,600	12.5	16.2	1085	880
4647737	24ANB736A**30	CNPV*4221A**	OVMAAB042112	35,400	12.5	16.2	1035	825
4647621	24ANB736A**30	CNPV*4221A**+TDR		35,000	12.0	14.5	1050	840
4647838	24ANB736A**30	CNPV*4221A**+UI	58CV(A,X)090–16	35,600	12.8	16.5	1050	840
4647839	24ANB736A**30	CNPV*4221A**+UI	58CV(A,X)110–20	35,600	13.0	16.5	1050	840
4647835	24ANB736A**30	CNPV*4221A**+UI	58MV(B,C)060–14	35,600	13.0	16.5	1050	840
4647836	24ANB736A**30	CNPV*4221A**+UI	58MV(B,C)080–14	35,400	12.6	16.0	1050	840
4647837	24ANB736A**30	CNPV*4221A**+UI	58MV(B,C)080–20	35,600	12.7	16.5	1050	840
4647943	24ANB736A**30	CNPV*4221A**+UI	58MV(B,C)100–20	35,200	12.8	16.5	975	780
4647715	24ANB736A**30	CNPV*4324A**	58HDV100––20	37,200	13.2	17.2	1155	920
4647988	24ANB736A**30	CNPV*4324A**	58UVB080–14	36,400	13.0	17.0	1030	820
4647989	24ANB736A**30	CNPV*4324A**	58UVB080–20	36,400	13.0	17.0	1010	840
4647990	24ANB736A**30	CNPV*4324A**	58UVB100–20	36,600	13.2	17.0	1040	800
4647991	24ANB736A**30	CNPV*4324A**	58UVB120–20	36,400	13.2	17.2	1010	845
4647739	24ANB736A**30	CNPV*4324A**	OVLAAB048112	36,800	13.0	17.0	1085	880
4647740	24ANB736A**30	CNPV*4324A**	OVLAAB060154	37,000	13.0	17.2	1250	1020
4647844	24ANB736A**30	CNPV*4324A**+UI	58CV(A,X)110–20	36,800	13.0	17.5	1050	840
4647845	24ANB736A**30	CNPV*4324A**+UI	58CV(A,X)135–22	36,800	13.5	17.5	1050	840
4647846	24ANB736A**30	CNPV*4324A**+UI	58CV(A,X)155–22	36,800	13.5	17.5	1050	840
4647841	24ANB736A**30	CNPV*4324A**+UI	58MV(B,C)080–20	36,600	13.0	17.0	1050	840
4647842	24ANB736A**30	CNPV*4324A**+UI	58MV(B,C)100–20	36,600	13.0	17.0	1050	840
4647843	24ANB736A**30	CNPV*4324A**+UI	58MV(B,C)120–20	36,800	13.0	17.0	1050	840
4647840	24ANB736A**30	CNPV*4324A**+UI	58MVB040–14	36,600	13.0	17.0	1050	840
4647683	24ANB736A**30	CNPV*4821A**	58MEC060–12	36,400	13.1	17.0	1115	835
4647682	24ANB736A**30	CNPV*4821A**	58MEC080–16	36,400	13.0	16.5	1090	995
4647604	24ANB736A**30	CNPV*4821A**	58PH*090–16	36,400	13.2	16.5	1090	960
4647992	24ANB736A**30	CNPV*4821A**	58UVB060–14	36,200	13.0	16.7	1055	870
4647993	24ANB736A**30	CNPV*4821A**	58UVB080–14	36,000	12.7	16.7	1030	820
4647994	24ANB736A**30	CNPV*4821A**	58UVB080–20	36,000	12.7	16.7	1010	840
4647995	24ANB736A**30	CNPV*4821A**	58UVB100–20	36,200	13.0	16.7	1040	800
4647712	24ANB736A**30	CNPV*4821A**	58VLR105–12	36,200	12.9	16.5	1065	880
4647714	24ANB736A**30	CNPV*4821A**	58VLR120–20	36,800	13.0	16.5	1170	1005
4647711	24ANB736A**30	CNPV*4821A**	58VMR105–12	35,800	12.9	16.5	975	800
4647713	24ANB736A**30	CNPV*4821A**	58VMR120–20	36,600	13.0	16.5	1155	1000
4647742	24ANB736A**30	CNPV*4821A**	OVLAAB048112	36,200	12.5	16.5	1085	880
4647741	24ANB736A**30	CNPV*4821A**	OVMAAB042112	36,000	13.0	16.7	1035	825
4647622	24ANB736A**30	CNPV*4821A**+TDR		35,600	12.0	14.5	1050	840
4647851	24ANB736A**30	CNPV*4821A**+UI	58CV(A,X)090–16	36,200	13.1	17.0	1050	840
4647852	24ANB736A**30	CNPV*4821A**+UI	58CV(A,X)110–20	36,200	13.1	17.0	1050	840
4647847	24ANB736A**30	CNPV*4821A**+UI	58MV(B,C)060–14	36,200	13.0	17.0	1050	840
4647848	24ANB736A**30	CNPV*4821A**+UI	58MV(B,C)080–14	36,000	12.9	16.5	1050	840
4647849	24ANB736A**30	CNPV*4821A**+UI	58MV(B,C)080–20	36,200	13.0	16.5	1050	840
4647850	24ANB736A**30	CNPV*4821A**+UI	58MV(B,C)100–20	36,200	13.0	16.5	1050	840
4647716	24ANB736A**30	CNPV*4824A**	58HDV100––20	36,600	13.0	16.7	1140	905
4647996	24ANB736A**30	CNPV*4824A**	58UVB080–14	36,000	12.7	16.7	1030	820
4647997	24ANB736A**30	CNPV*4824A**	58UVB080–20	36,000	12.7	16.7	1010	840
4647998	24ANB736A**30	CNPV*4824A**	58UVB100–20	36,200	13.0	16.7	1040	800
4647999	24ANB736A**30	CNPV*4824A**	58UVB120–20	36,000	13.0	17.0	1010	845
4647743	24ANB736A**30	CNPV*4824A**	OVLAAB048112	36,200	12.5	16.5	1085	880
4647744	24ANB736A**30	CNPV*4824A**	OVLAAB060154	37,000	13.0	17.0	1250	1020
4647623	24ANB736A**30	CNPV*4824A**+TDR		35,600	12.0	14.5	1050	840
4647857	24ANB736A**30	CNPV*4824A**+UI	58CV(A,X)110–20	36,200	13.0	17.0	1050	840
4647858	24ANB736A**30	CNPV*4824A**+UI	58CV(A,X)135–22	36,400	13.2	17.0	1050	840
4647859	24ANB736A**30	CNPV*4824A**+UI	58CV(A,X)155–22	36,400	13.4	17.0	1050	840
4647854	24ANB736A**30	CNPV*4824A**+UI	58MV(B,C)080–20	36,200	13.0	16.5	1050	840

See notes on page 25

COMBINATION RATINGS CONTINUED

AHRI Ref. Number	Model Number	Indoor Coil Model Number	Furnace Model Number	AHRI Standard Ratings – Cooling				
				Cooling Capacity	EER	SEER	ID CFM	
							High	Low
4647855	24ANB736A**30	CNPV*4824A**+UI	58MV(B,C)100–20	36,200	13.1	16.5	1050	840
4647856	24ANB736A**30	CNPV*4824A**+UI	58MV(B,C)120–20	36,200	13.1	17.0	1050	840
4647853	24ANB736A**30	CNPV*4824A**+UI	58MVB040–14	36,200	13.0	17.0	1050	840
4647645	24ANB736A**30	CSPH*3612A**	58HDV060––12	36,000	12.5	16.0	1100	775
4647642	24ANB736A**30	CSPH*3612A**	58MEC060–12	36,200	13.0	16.7	1080	805
4647643	24ANB736A**30	CSPH*3612A**	58MEC080–12	36,000	13.0	16.5	1055	920
4647644	24ANB736A**30	CSPH*3612A**	58MEC080–16	36,200	12.9	16.5	1080	980
4647766	24ANB736A**30	CSPH*3612A**	58PH*070–16	35,800	12.2	16.0	1045	920
4647641	24ANB736A**30	CSPH*3612A**	58PH*090–16	36,200	13.1	16.5	1060	925
4647758	24ANB736A**30	CSPH*3612A**	OVLAAB048112	36,000	12.5	16.2	1085	880
4647759	24ANB736A**30	CSPH*3612A**	OVLAAB060154	36,800	12.7	16.7	1250	1020
4647757	24ANB736A**30	CSPH*3612A**	OVMAAB042112	35,800	12.5	16.5	1035	825
4647640	24ANB736A**30	CSPH*3612A**+TDR		35,400	12.0	14.5	1050	840
4647946	24ANB736A**30	CSPH*3612A**+UI	58CV(A,X)070–12	35,600	12.8	16.5	975	780
4647908	24ANB736A**30	CSPH*3612A**+UI	58CV(A,X)090–16	36,200	13.0	16.5	1050	840
4647909	24ANB736A**30	CSPH*3612A**+UI	58CV(A,X)110–20	36,200	13.0	16.5	1050	840
4647910	24ANB736A**30	CSPH*3612A**+UI	58CV(A,X)135–22	36,200	13.1	17.0	1050	840
4647911	24ANB736A**30	CSPH*3612A**+UI	58CV(A,X)155–22	36,200	13.2	17.0	1050	840
4647904	24ANB736A**30	CSPH*3612A**+UI	58MV(B,C)060–14	36,000	13.0	17.0	1050	840
4647945	24ANB736A**30	CSPH*3612A**+UI	58MV(B,C)080–14	35,600	13.0	16.5	975	780
4647905	24ANB736A**30	CSPH*3612A**+UI	58MV(B,C)080–20	36,000	12.9	16.5	1050	840
4647906	24ANB736A**30	CSPH*3612A**+UI	58MV(B,C)100–20	36,000	12.9	16.5	1050	840
4647907	24ANB736A**30	CSPH*3612A**+UI	58MV(B,C)120–20	36,000	13.0	16.5	1050	840
4647903	24ANB736A**30	CSPH*3612A**+UI	58MVB040–14	36,000	13.0	16.5	1050	840
4647651	24ANB736A**30	CSPH*4212A**	58HDV060––12	36,200	12.5	16.5	1110	785
4647648	24ANB736A**30	CSPH*4212A**	58MEC060–12	36,600	13.1	17.0	1095	815
4647649	24ANB736A**30	CSPH*4212A**	58MEC080–12	36,400	13.1	17.0	1065	780
4647650	24ANB736A**30	CSPH*4212A**	58MEC080–16	36,400	13.0	16.5	1090	990
4647647	24ANB736A**30	CSPH*4212A**	58PH*090–16	36,400	13.2	16.5	1070	935
4647761	24ANB736A**30	CSPH*4212A**	OVLAAB048112	36,200	12.5	16.5	1085	880
4647762	24ANB736A**30	CSPH*4212A**	OVLAAB060154	37,200	13.0	17.0	1250	1020
4647760	24ANB736A**30	CSPH*4212A**	OVMAAB042112	36,000	12.7	16.7	1035	825
4647646	24ANB736A**30	CSPH*4212A**+TDR		35,800	12.0	15.0	1050	840
4647918	24ANB736A**30	CSPH*4212A**+UI	58CV(A,X)070–12	36,200	12.9	16.5	1050	840
4647919	24ANB736A**30	CSPH*4212A**+UI	58CV(A,X)090–16	36,400	13.1	17.0	1050	840
4647920	24ANB736A**30	CSPH*4212A**+UI	58CV(A,X)110–20	36,400	13.1	17.0	1050	840
4647921	24ANB736A**30	CSPH*4212A**+UI	58CV(A,X)135–22	36,400	13.2	17.0	1050	840
4647922	24ANB736A**30	CSPH*4212A**+UI	58CV(A,X)155–22	36,400	13.3	17.0	1050	840
4647913	24ANB736A**30	CSPH*4212A**+UI	58MV(B,C)060–14	36,400	13.0	17.0	1050	840
4647914	24ANB736A**30	CSPH*4212A**+UI	58MV(B,C)080–14	36,200	12.9	16.5	1050	840
4647915	24ANB736A**30	CSPH*4212A**+UI	58MV(B,C)080–20	36,200	13.0	16.5	1050	840
4647916	24ANB736A**30	CSPH*4212A**+UI	58MV(B,C)100–20	36,200	13.0	16.5	1050	840
4647917	24ANB736A**30	CSPH*4212A**+UI	58MV(B,C)120–20	36,400	13.1	17.0	1050	840
4647912	24ANB736A**30	CSPH*4212A**+UI	58MVB040–14	36,200	13.0	17.0	1050	840
4647657	24ANB736A**30	CSPH*4812A**	58HDV060––12	36,400	12.6	16.5	1110	790
4647654	24ANB736A**30	CSPH*4812A**	58MEC060–12	36,600	13.1	17.0	1095	820
4647655	24ANB736A**30	CSPH*4812A**	58MEC080–12	36,600	13.1	17.0	1065	930
4647656	24ANB736A**30	CSPH*4812A**	58MEC080–16	36,600	13.1	16.5	1090	990
4647653	24ANB736A**30	CSPH*4812A**	58PH*090–16	36,600	13.2	16.5	1070	940
4647764	24ANB736A**30	CSPH*4812A**	OVLAAB048112	36,400	12.5	16.5	1085	880
4647765	24ANB736A**30	CSPH*4812A**	OVLAAB060154	37,200	13.0	17.0	1250	1020
4647763	24ANB736A**30	CSPH*4812A**	OVMAAB042112	36,200	13.0	16.7	1035	825
4647652	24ANB736A**30	CSPH*4812A**+TDR		35,800	12.0	15.0	1050	840
4647929	24ANB736A**30	CSPH*4812A**+UI	58CV(A,X)070–12	36,400	12.9	16.5	1050	840
4647930	24ANB736A**30	CSPH*4812A**+UI	58CV(A,X)090–16	36,400	13.1	17.0	1050	840
4647931	24ANB736A**30	CSPH*4812A**+UI	58CV(A,X)110–20	36,600	13.1	17.0	1050	840
4647932	24ANB736A**30	CSPH*4812A**+UI	58CV(A,X)135–22	36,600	13.2	17.0	1050	840
4647933	24ANB736A**30	CSPH*4812A**+UI	58CV(A,X)155–22	36,600	13.3	17.0	1050	840
4647924	24ANB736A**30	CSPH*4812A**+UI	58MV(B,C)060–14	36,400	13.0	17.0	1050	840
4647925	24ANB736A**30	CSPH*4812A**+UI	58MV(B,C)080–14	36,400	12.9	16.5	1050	840
4647926	24ANB736A**30	CSPH*4812A**+UI	58MV(B,C)080–20	36,400	13.0	16.5	1050	840
4647927	24ANB736A**30	CSPH*4812A**+UI	58MV(B,C)100–20	36,400	13.1	16.5	1050	840
4647928	24ANB736A**30	CSPH*4812A**+UI	58MV(B,C)120–20	36,400	13.2	17.0	1050	840
4647923	24ANB736A**30	CSPH*4812A**+UI	58MVB040–14	36,400	13.0	17.0	1050	840
4647935	24ANB736A**30	FE4AN(B,F)003+UI		35,400	13.0	17.0	1050	840
4647936	24ANB736A**30	FE4AN(B,F)005+UI		36,800	13.5	17.5	1050	840
4647937	24ANB736A**30	FE4ANB006+UI		37,200	13.7	17.5	1050	840
4647934	24ANB736A**30	FE4ANF002+UI		35,200	12.5	16.5	1050	840
4647938	24ANB736A**30	FE5ANB004+UI		37,200	13.7	18.0	1050	840
4647629	24ANB736A**30	FV4CN(B,F)003		35,400	13.0	17.0	1050	840
4647630	24ANB736A**30	FV4CN(B,F)005		36,800	13.5	17.5	1050	840

See notes on page 25

COMBINATION RATINGS CONTINUED

AHRI Ref. Number	Model Number	Indoor Coil Model Number	Furnace Model Number	AHRI Standard Ratings – Cooling				
				Cooling Capacity	EER	SEER	ID CFM	
							High	Low
4647684	24ANB736A**30	FV4CNF002		35,200	12.6	16.0	1050	840
4648000	24ANB748A**30	†CNPH*6124A**+UI	58MV(B,C)100–20	49,000	13.1	16.5	1400	1120
4648001	24ANB748A**30	CAP**4817A**+TDR		48,000	12.5	14.5	1400	1120
4648131	24ANB748A**30	CAP**4817A**+UI	58CV(A,X)090–16	48,500	12.5	16.0	1400	1120
4648053	24ANB748A**30	CAP**4821A**	58MEC080–16	48,000	12.5	16.0	1430	1105
4648054	24ANB748A**30	CAP**4821A**	58MEC100–20	48,000	13.0	16.0	1385	1050
4648003	24ANB748A**30	CAP**4821A**	58PH*110–20	48,000	13.0	16.0	1350	1110
4648220	24ANB748A**30	CAP**4821A**	58UVB080–20	47,500	12.5	16.0	1310	1010
4648221	24ANB748A**30	CAP**4821A**	58UVB100–20	48,000	12.5	15.7	1395	1145
4648083	24ANB748A**30	CAP**4821A**	58VLR120–20	48,000	12.5	16.0	1350	1170
4648082	24ANB748A**30	CAP**4821A**	58VMR120–20	47,500	12.5	15.5	1355	1155
4648125	24ANB748A**30	CAP**4821A**	OVLAAB048112	47,500	12.2	15.7	1450	1170
4648002	24ANB748A**30	CAP**4821A**+TDR		48,500	12.0	14.5	1600	1120
4648134	24ANB748A**30	CAP**4821A**+UI	58CV(A,X)090–16	48,000	12.5	16.0	1400	1120
4648135	24ANB748A**30	CAP**4821A**+UI	58CV(A,X)110–20	48,000	13.0	16.0	1400	1120
4648132	24ANB748A**30	CAP**4821A**+UI	58MV(B,C)080–20	48,000	12.3	15.5	1400	1120
4648133	24ANB748A**30	CAP**4821A**+UI	58MV(B,C)100–20	48,000	12.2	15.5	1400	1120
4648049	24ANB748A**30	CAP**4823A**	58HDV080––20	48,000	12.5	15.0	1470	1160
4648230	24ANB748A**30	CAP**4823A**	58UVB080–20	47,500	12.5	16.0	1310	1010
4648231	24ANB748A**30	CAP**4823A**	58UVB100–20	48,000	12.5	15.7	1395	1145
4648232	24ANB748A**30	CAP**4823A**	58UVB120–20	48,000	12.7	16.0	1360	1175
4648105	24ANB748A**30	CAP**4823A**	OVLAAB048112	47,500	12.2	15.7	1450	1170
4648048	24ANB748A**30	CAP**4823A**+TDR		47,500	12.0	14.5	1400	1120
4648155	24ANB748A**30	CAP**4823A**+UI	58CV(A,X)110–20	48,000	13.0	16.0	1400	1120
4648156	24ANB748A**30	CAP**4823A**+UI	58CV(A,X)135–22	48,000	13.0	16.2	1400	1120
4648157	24ANB748A**30	CAP**4823A**+UI	58CV(A,X)155–22	48,500	13.0	16.2	1400	1120
4648152	24ANB748A**30	CAP**4823A**+UI	58MV(B,C)080–20	48,000	12.2	15.7	1400	1120
4648153	24ANB748A**30	CAP**4823A**+UI	58MV(B,C)100–20	48,000	12.2	15.7	1400	1120
4648154	24ANB748A**30	CAP**4823A**+UI	58MV(B,C)120–20	48,000	12.5	16.0	1400	1120
4648055	24ANB748A**30	CAP**4824A**	58MEC100–20	48,000	13.0	16.0	1410	1065
4648056	24ANB748A**30	CAP**4824A**	58MEC120–20	48,500	13.0	16.0	1425	1260
4648005	24ANB748A**30	CAP**4824A**	58PH*090–16	48,000	12.5	16.0	1415	1100
4648006	24ANB748A**30	CAP**4824A**	58PH*110–20	48,000	13.0	16.0	1375	1130
4648222	24ANB748A**30	CAP**4824A**	58UVB080–20	47,500	12.7	16.0	1310	1010
4648223	24ANB748A**30	CAP**4824A**	58UVB100–20	48,000	12.5	15.7	1395	1145
4648224	24ANB748A**30	CAP**4824A**	58UVB120–20	48,000	12.7	16.2	1360	1175
4648085	24ANB748A**30	CAP**4824A**	58VLR120–20	48,000	13.0	16.0	1350	1170
4648084	24ANB748A**30	CAP**4824A**	58VMR120–20	47,500	12.5	15.5	1355	1155
4648100	24ANB748A**30	CAP**4824A**	OVLAAB048112	48,000	12.2	15.7	1450	1170
4648101	24ANB748A**30	CAP**4824A**	OVLAAB060154	48,500	13.0	16.7	1445	1170
4648004	24ANB748A**30	CAP**4824A**+TDR		47,500	12.0	14.5	1400	1120
4648139	24ANB748A**30	CAP**4824A**+UI	58CV(A,X)110–20	48,000	13.0	16.0	1400	1120
4648140	24ANB748A**30	CAP**4824A**+UI	58CV(A,X)135–22	48,500	13.0	16.0	1400	1120
4648141	24ANB748A**30	CAP**4824A**+UI	58CV(A,X)155–22	48,500	13.0	16.5	1400	1120
4648136	24ANB748A**30	CAP**4824A**+UI	58MV(B,C)080–20	48,000	12.2	15.7	1400	1120
4648137	24ANB748A**30	CAP**4824A**+UI	58MV(B,C)100–20	48,000	12.2	15.7	1400	1120
4648138	24ANB748A**30	CAP**4824A**+UI	58MV(B,C)120–20	48,000	12.5	16.0	1400	1120
4648008	24ANB748A**30	CAP**6021A**	58PH*090–16	49,000	13.0	16.0	1410	1100
4648009	24ANB748A**30	CAP**6021A**	58PH*110–20	49,000	13.0	16.5	1370	1125
4648225	24ANB748A**30	CAP**6021A**	58UVB080–20	48,500	12.7	15.7	1310	1200
4648226	24ANB748A**30	CAP**6021A**	58UVB100–20	49,000	12.7	16.0	1395	1145
4648087	24ANB748A**30	CAP**6021A**	58VLR120–20	49,000	13.0	16.0	1350	1170
4648086	24ANB748A**30	CAP**6021A**	58VMR120–20	49,000	13.0	16.0	1355	1155
4648102	24ANB748A**30	CAP**6021A**	OVLAAB048112	49,000	12.5	16.0	1450	1170
4648007	24ANB748A**30	CAP**6021A**+TDR		48,500	12.5	14.5	1400	1120
4648144	24ANB748A**30	CAP**6021A**+UI	58CV(A,X)090–16	49,000	13.0	16.2	1400	1120
4648145	24ANB748A**30	CAP**6021A**+UI	58CV(A,X)110–20	49,000	13.0	16.0	1400	1120
4648142	24ANB748A**30	CAP**6021A**+UI	58MV(B,C)080–20	49,000	12.6	16.0	1400	1120
4648143	24ANB748A**30	CAP**6021A**+UI	58MV(B,C)100–20	49,000	12.5	16.0	1400	1120
4648057	24ANB748A**30	CAP**6024A**	58MEC100–20	49,500	13.0	16.5	1410	1070
4648058	24ANB748A**30	CAP**6024A**	58MEC120–20	49,500	13.0	16.7	1425	1260
4648010	24ANB748A**30	CAP**6024A**	58PH*110–20	49,000	13.1	16.5	1380	1130
4648011	24ANB748A**30	CAP**6024A**	58PH*135–20	49,000	13.0	16.0	1400	1235
4648227	24ANB748A**30	CAP**6024A**	58UVB080–20	48,500	12.7	16.2	1310	1010
4648228	24ANB748A**30	CAP**6024A**	58UVB100–20	49,000	12.7	16.0	1395	1145
4648229	24ANB748A**30	CAP**6024A**	58UVB120–20	49,000	13.0	16.2	1360	1175
4648103	24ANB748A**30	CAP**6024A**	OVLAAB048112	49,000	12.5	16.0	1450	1170
4648104	24ANB748A**30	CAP**6024A**	OVLAAB060154	49,500	13.2	16.7	1445	1170
4648149	24ANB748A**30	CAP**6024A**+UI	58CV(A,X)110–20	49,000	13.0	16.0	1400	1120
4648150	24ANB748A**30	CAP**6024A**+UI	58CV(A,X)135–22	49,500	13.0	16.5	1400	1120

See notes on page 25

COMBINATION RATINGS CONTINUED

AHRI Ref. Number	Model Number	Indoor Coil Model Number	Furnace Model Number	AHRI Standard Ratings – Cooling				
				Cooling Capacity	EER	SEER	ID CFM	
							High	Low
4648151	24ANB748A**30	CAP**6024A**+UI	58CV(A,X)155–22	49,500	13.1	17.0	1400	1120
4648146	24ANB748A**30	CAP**6024A**+UI	58MV(B,C)080–20	49,000	12.5	16.0	1400	1120
4648147	24ANB748A**30	CAP**6024A**+UI	58MV(B,C)100–20	49,000	12.5	16.0	1400	1120
4648148	24ANB748A**30	CAP**6024A**+UI	58MV(B,C)120–20	49,000	12.8	16.0	1400	1120
4648051	24ANB748A**30	CAP**6025A**	58HDV080––20	49,500	12.5	16.0	1495	1180
4648052	24ANB748A**30	CAP**6025A**	58HDV100––20	49,000	13.0	15.5	1430	1120
4648233	24ANB748A**30	CAP**6025A**	58UVB080–20	48,500	12.7	16.2	1310	1010
4648234	24ANB748A**30	CAP**6025A**	58UVB100–20	49,000	12.7	16.0	1395	1145
4648235	24ANB748A**30	CAP**6025A**	58UVB120–20	49,000	13.0	16.2	1360	1175
4648106	24ANB748A**30	CAP**6025A**	OVLAAB048112	49,000	12.5	16.0	1450	1170
4648107	24ANB748A**30	CAP**6025A**	OVLAAB060154	49,500	13.2	16.7	1445	1170
4648050	24ANB748A**30	CAP**6025A**+TDR		48,500	12.5	14.5	1400	1120
4648161	24ANB748A**30	CAP**6025A**+UI	58CV(A,X)110–20	49,000	13.0	16.2	1400	1120
4648162	24ANB748A**30	CAP**6025A**+UI	58CV(A,X)135–22	49,500	13.0	16.5	1400	1120
4648163	24ANB748A**30	CAP**6025A**+UI	58CV(A,X)155–22	49,500	13.5	17.0	1400	1120
4648158	24ANB748A**30	CAP**6025A**+UI	58MV(B,C)080–20	49,000	12.5	16.0	1400	1120
4648159	24ANB748A**30	CAP**6025A**+UI	58MV(B,C)100–20	49,000	12.5	16.0	1400	1120
4648160	24ANB748A**30	CAP**6025A**+UI	58MV(B,C)120–20	49,000	12.7	16.2	1400	1120
4648067	24ANB748A**30	CNPH*4821A**	58MEC080–16	48,000	12.5	16.0	1450	1020
4648068	24ANB748A**30	CNPH*4821A**	58MEC100–20	48,500	13.0	16.0	1410	1070
4648069	24ANB748A**30	CNPH*4821A**	58MEC120–20	48,500	13.0	16.0	1425	1260
4648023	24ANB748A**30	CNPH*4821A**	58PH*090–16	48,500	13.0	16.0	1420	1105
4648024	24ANB748A**30	CNPH*4821A**	58PH*110–20	48,500	13.0	16.0	1380	1130
4648115	24ANB748A**30	CNPH*4821A**	OVLAAB048112	48,000	12.2	15.7	1450	1170
4648116	24ANB748A**30	CNPH*4821A**	OVLAAB060154	48,500	13.0	16.7	1445	1170
4648022	24ANB748A**30	CNPH*4821A**+TDR		48,000	12.1	14.5	1400	1120
4648189	24ANB748A**30	CNPH*4821A**+UI	58CV(A,X)090–16	48,000	13.0	16.0	1400	1120
4648190	24ANB748A**30	CNPH*4821A**+UI	58CV(A,X)110–20	48,500	13.0	16.0	1400	1120
4648191	24ANB748A**30	CNPH*4821A**+UI	58CV(A,X)135–22	48,500	13.0	16.5	1400	1120
4648192	24ANB748A**30	CNPH*4821A**+UI	58CV(A,X)155–22	48,500	13.0	16.5	1400	1120
4648186	24ANB748A**30	CNPH*4821A**+UI	58MV(B,C)080–20	48,000	12.4	16.0	1400	1120
4648187	24ANB748A**30	CNPH*4821A**+UI	58MV(B,C)100–20	48,000	12.3	15.5	1400	1120
4648188	24ANB748A**30	CNPH*4821A**+UI	58MV(B,C)120–20	48,000	12.5	16.0	1400	1120
4648070	24ANB748A**30	CNPH*6024A**	58MEC080–16	49,000	12.6	16.0	1455	1130
4648071	24ANB748A**30	CNPH*6024A**	58MEC100–20	49,500	13.0	16.5	1425	1085
4648072	24ANB748A**30	CNPH*6024A**	58MEC120–20	49,500	13.0	16.5	1440	1275
4648026	24ANB748A**30	CNPH*6024A**	58PH*110–20	49,000	13.1	16.5	1395	1145
4648027	24ANB748A**30	CNPH*6024A**	58PH*135–20	49,000	13.0	16.0	1420	1255
4648117	24ANB748A**30	CNPH*6024A**	OVLAAB048112	49,000	12.5	16.0	1450	1170
4648118	24ANB748A**30	CNPH*6024A**	OVLAAB060154	49,500	13.2	17.0	1445	1170
4648025	24ANB748A**30	CNPH*6024A**+TDR		48,500	12.5	14.5	1400	1120
4648196	24ANB748A**30	CNPH*6024A**+UI	58CV(A,X)090–16	49,000	13.0	16.2	1400	1120
4648197	24ANB748A**30	CNPH*6024A**+UI	58CV(A,X)110–20	49,000	13.0	16.5	1400	1120
4648198	24ANB748A**30	CNPH*6024A**+UI	58CV(A,X)135–22	49,500	13.0	16.5	1400	1120
4648199	24ANB748A**30	CNPH*6024A**+UI	58CV(A,X)155–22	49,500	13.2	16.5	1400	1120
4648193	24ANB748A**30	CNPH*6024A**+UI	58MV(B,C)080–20	49,000	12.7	16.0	1400	1120
4648194	24ANB748A**30	CNPH*6024A**+UI	58MV(B,C)100–20	49,000	12.6	16.0	1400	1120
4648195	24ANB748A**30	CNPH*6024A**+UI	58MV(B,C)120–20	49,000	12.8	16.5	1400	1120
4648073	24ANB748A**30	CNPH*6124A**	58MEC080–16	49,500	13.1	16.8	1445	1010
4648074	24ANB748A**30	CNPH*6124A**	58MEC100–20	49,500	13.0	16.5	1400	1060
4648075	24ANB748A**30	CNPH*6124A**	58MEC120–20	49,500	13.0	16.5	1420	1250
4648047	24ANB748A**30	CNPH*6124A**	58PH*090–16	49,500	13.3	16.9	1410	1095
4648028	24ANB748A**30	CNPH*6124A**	58PH*110–20	49,500	13.6	17.0	1370	1120
4648029	24ANB748A**30	CNPH*6124A**	58PH*135–20	49,500	13.4	16.7	1390	1220
4648119	24ANB748A**30	CNPH*6124A**	OVLAAB048112	49,000	12.5	16.0	1450	1170
4648120	24ANB748A**30	CNPH*6124A**	OVLAAB060154	49,500	13.2	17.0	1445	1170
4648202	24ANB748A**30	CNPH*6124A**+UI	58CV(A,X)090–16	49,500	13.0	16.2	1400	1120
4648203	24ANB748A**30	CNPH*6124A**+UI	58CV(A,X)110–20	49,000	13.5	17.0	1300	1040
4648204	24ANB748A**30	CNPH*6124A**+UI	58CV(A,X)135–22	49,500	13.5	17.0	1400	1120
4648205	24ANB748A**30	CNPH*6124A**+UI	58CV(A,X)155–22	49,500	13.5	16.5	1400	1120
4648200	24ANB748A**30	CNPH*6124A**+UI	58MV(B,C)080–20	49,000	12.5	16.0	1400	1120
4648201	24ANB748A**30	CNPH*6124A**+UI	58MV(B,C)120–20	49,000	13.4	16.9	1300	1040
4648059	24ANB748A**30	CNPV*4821A**	58MEC080–16	48,000	12.5	16.0	1450	1120
4648060	24ANB748A**30	CNPV*4821A**	58MEC100–20	48,500	13.0	16.0	1410	1070
4648013	24ANB748A**30	CNPV*4821A**	58PH*110–20	48,500	13.0	16.0	1380	1130
4648236	24ANB748A**30	CNPV*4821A**	58UVB080–20	47,500	12.7	16.2	1310	1010
4648237	24ANB748A**30	CNPV*4821A**	58UVB100–20	48,000	12.5	16.0	1395	1145
4648089	24ANB748A**30	CNPV*4821A**	58VLR120–20	48,000	13.0	16.0	1350	1170
4648088	24ANB748A**30	CNPV*4821A**	58VMR120–20	48,000	12.5	16.0	1355	1155
4648108	24ANB748A**30	CNPV*4821A**	OVLAAB048112	48,000	12.2	15.7	1450	1170
4648012	24ANB748A**30	CNPV*4821A**+TDR		48,000	12.1	14.5	1400	1120

See notes on page 25

COMBINATION RATINGS CONTINUED

AHRI Ref. Number	Model Number	Indoor Coil Model Number	Furnace Model Number	AHRI Standard Ratings – Cooling				
				Cooling Capacity	EER	SEER	ID CFM	
							High	Low
4648166	24ANB748A**30	CNPV*4821A**+UI	58CV(A,X)090–16	48,000	13.0	16.0	1400	1120
4648167	24ANB748A**30	CNPV*4821A**+UI	58CV(A,X)110–20	48,500	13.0	16.0	1400	1120
4648164	24ANB748A**30	CNPV*4821A**+UI	58MV(B,C)080–20	48,000	12.4	16.0	1400	1120
4648165	24ANB748A**30	CNPV*4821A**+UI	58MV(B,C)100–20	48,000	12.3	15.5	1400	1120
4648098	24ANB748A**30	CNPV*4824A**	58HDV100––20	48,000	12.5	16.0	1430	1125
4648062	24ANB748A**30	CNPV*4824A**	58MEC100–20	48,500	13.0	16.0	1410	1070
4648061	24ANB748A**30	CNPV*4824A**	58MEC120–20	48,500	13.0	16.0	1425	1260
4648015	24ANB748A**30	CNPV*4824A**	58PH*110–20	48,500	13.0	16.0	1380	1130
4648016	24ANB748A**30	CNPV*4824A**	58PH*135–20	48,000	13.0	16.0	1400	1235
4648128	24ANB748A**30	CNPV*4824A**	58UVB080–20	47,500	12.5	16.2	1310	840
4648129	24ANB748A**30	CNPV*4824A**	58UVB100–20	48,000	12.5	16.5	1395	1040
4648130	24ANB748A**30	CNPV*4824A**	58UVB120–20	48,000	13.0	16.5	1360	845
4648091	24ANB748A**30	CNPV*4824A**	58VLR120–20	48,000	13.0	16.0	1350	1170
4648090	24ANB748A**30	CNPV*4824A**	58VMR120–20	48,000	12.5	16.0	1355	1155
4648109	24ANB748A**30	CNPV*4824A**	OVLAAB048112	48,000	12.2	15.7	1450	1170
4648110	24ANB748A**30	CNPV*4824A**	OVLAAB060154	48,500	13.0	16.7	1445	1170
4648014	24ANB748A**30	CNPV*4824A**+TDR		48,000	12.1	14.5	1400	1120
4648171	24ANB748A**30	CNPV*4824A**+UI	58CV(A,X)110–20	48,500	13.0	16.0	1400	1120
4648172	24ANB748A**30	CNPV*4824A**+UI	58CV(A,X)135–22	48,500	13.0	16.0	1400	1120
4648173	24ANB748A**30	CNPV*4824A**+UI	58CV(A,X)155–22	48,500	13.0	16.5	1400	1120
4648168	24ANB748A**30	CNPV*4824A**+UI	58MV(B,C)080–20	48,000	12.2	16.2	1400	1120
4648169	24ANB748A**30	CNPV*4824A**+UI	58MV(B,C)100–20	48,000	12.2	16.2	1400	1120
4648170	24ANB748A**30	CNPV*4824A**+UI	58MV(B,C)120–20	48,000	12.5	16.5	1400	1120
4648126	24ANB748A**30	CNPV*6024A**	58HDV100––20	49,000	13.0	16.0	1440	1135
4648063	24ANB748A**30	CNPV*6024A**	58MEC100–20	49,500	13.0	16.5	1425	1085
4648064	24ANB748A**30	CNPV*6024A**	58MEC120–20	49,500	13.0	16.5	1440	1275
4648018	24ANB748A**30	CNPV*6024A**	58PH*110–20	49,000	13.1	16.5	1395	1145
4648019	24ANB748A**30	CNPV*6024A**	58PH*135–20	49,000	13.0	16.0	1420	1255
4648238	24ANB748A**30	CNPV*6024A**	58UVB080–20	48,500	13.0	16.2	1310	1010
4648239	24ANB748A**30	CNPV*6024A**	58UVB100–20	49,000	12.7	16.2	1395	1145
4648240	24ANB748A**30	CNPV*6024A**	58UVB120–20	49,000	13.0	16.5	1360	1175
4648093	24ANB748A**30	CNPV*6024A**	58VLR120–20	49,000	13.0	16.0	1350	1170
4648092	24ANB748A**30	CNPV*6024A**	58VMR120–20	48,500	13.0	16.0	1355	1155
4648111	24ANB748A**30	CNPV*6024A**	OVLAAB048112	49,000	12.5	16.0	1450	1170
4648112	24ANB748A**30	CNPV*6024A**	OVLAAB060154	49,500	13.2	17.0	1445	1170
4648017	24ANB748A**30	CNPV*6024A**+TDR		48,500	12.5	14.5	1400	1120
4648177	24ANB748A**30	CNPV*6024A**+UI	58CV(A,X)110–20	49,000	13.0	16.5	1400	1120
4648178	24ANB748A**30	CNPV*6024A**+UI	58CV(A,X)135–22	49,500	13.0	16.5	1400	1120
4648179	24ANB748A**30	CNPV*6024A**+UI	58CV(A,X)155–22	49,500	13.5	16.5	1400	1120
4648174	24ANB748A**30	CNPV*6024A**+UI	58MV(B,C)080–20	49,000	12.6	16.0	1400	1120
4648175	24ANB748A**30	CNPV*6024A**+UI	58MV(B,C)100–20	49,000	12.6	16.0	1400	1120
4648176	24ANB748A**30	CNPV*6024A**+UI	58MV(B,C)120–20	49,000	12.8	16.0	1400	1120
4648099	24ANB748A**30	CNPV*6124A**	58HDV100––20	50,000	13.0	16.5	1445	1145
4648065	24ANB748A**30	CNPV*6124A**	58MEC100–20	50,000	13.0	16.7	1430	1095
4648066	24ANB748A**30	CNPV*6124A**	58MEC120–20	50,000	13.5	16.7	1445	1285
4648046	24ANB748A**30	CNPV*6124A**	58PH*090–16	50,000	13.5	17.2	1435	1125
4648020	24ANB748A**30	CNPV*6124A**	58PH*110–20	50,000	13.7	17.3	1400	1160
4648021	24ANB748A**30	CNPV*6124A**	58PH*135–20	50,000	13.6	17.0	1425	1265
4648241	24ANB748A**30	CNPV*6124A**	58UVB080–20	49,000	13.0	16.7	1310	1010
4648242	24ANB748A**30	CNPV*6124A**	58UVB100–20	49,500	13.0	16.5	1395	1145
4648243	24ANB748A**30	CNPV*6124A**	58UVB120–20	49,500	13.2	16.7	1360	1175
4648095	24ANB748A**30	CNPV*6124A**	58VLR120–20	49,500	13.0	16.5	1350	1170
4648094	24ANB748A**30	CNPV*6124A**	58VMR120–20	49,500	13.0	16.5	1355	1155
4648113	24ANB748A**30	CNPV*6124A**	OVLAAB048112	49,500	12.7	16.2	1450	1170
4648114	24ANB748A**30	CNPV*6124A**	OVLAAB060154	50,000	13.5	17.0	1445	1170
4648127	24ANB748A**30	CNPV*6124A**+TDR		49,000	12.9	15.4	1400	1120
4648183	24ANB748A**30	CNPV*6124A**+UI	58CV(A,X)110–20	49,500	13.7	17.3	1300	1040
4648184	24ANB748A**30	CNPV*6124A**+UI	58CV(A,X)135–22	50,000	13.5	17.5	1400	1120
4648185	24ANB748A**30	CNPV*6124A**+UI	58CV(A,X)155–22	50,000	13.5	17.0	1400	1120
4648180	24ANB748A**30	CNPV*6124A**+UI	58MV(B,C)080–20	49,500	12.7	16.2	1400	1120
4648181	24ANB748A**30	CNPV*6124A**+UI	58MV(B,C)100–20	49,000	13.4	17.0	1300	1040
4648182	24ANB748A**30	CNPV*6124A**+UI	58MV(B,C)120–20	49,500	13.6	17.2	1300	1040
4648034	24ANB748A**30	CSPH*4812A**	58HDV080––20	48,500	12.5	16.0	1465	1160
4648035	24ANB748A**30	CSPH*4812A**	58HDV100––20	48,500	12.5	16.0	1400	1100
4648076	24ANB748A**30	CSPH*4812A**	58MEC080–16	48,500	12.5	16.0	1425	1100
4648077	24ANB748A**30	CSPH*4812A**	58MEC100–20	48,500	13.0	16.0	1380	1045
4648078	24ANB748A**30	CSPH*4812A**	58MEC120–20	49,000	13.0	16.0	1395	1230
4648031	24ANB748A**30	CSPH*4812A**	58PH*090–16	48,500	13.0	16.0	1390	1080
4648032	24ANB748A**30	CSPH*4812A**	58PH*110–20	48,500	13.0	16.5	1340	1105
4648033	24ANB748A**30	CSPH*4812A**	58PH*135–20	48,500	13.0	16.0	1360	1200
4648096	24ANB748A**30	CSPH*4812A**	58VMR120–20	48,500	12.5	16.0	1355	1155

See notes on page 25

COMBINATION RATINGS CONTINUED

AHRI Ref. Number	Model Number	Indoor Coil Model Number	Furnace Model Number	AHRI Standard Ratings – Cooling				
				Cooling Capacity	EER	SEER	ID CFM	
							High	Low
4648121	24ANB748A**30	CSPH*4812A**	OVLAAB048112	48,500	12.2	15.7	1450	1170
4648122	24ANB748A**30	CSPH*4812A**	OVLAAB060154	49,000	13.0	16.5	1445	1170
4648030	24ANB748A**30	CSPH*4812A**+TDR		48,000	12.5	14.5	1400	1120
4648209	24ANB748A**30	CSPH*4812A**+UI	58CV(A,X)090–16	48,500	13.0	15.5	1400	1120
4648210	24ANB748A**30	CSPH*4812A**+UI	58CV(A,X)110–20	48,500	13.0	15.5	1400	1120
4648211	24ANB748A**30	CSPH*4812A**+UI	58CV(A,X)135–22	49,000	13.0	16.0	1400	1120
4648212	24ANB748A**30	CSPH*4812A**+UI	58CV(A,X)155–22	49,000	13.0	16.5	1400	1120
4648206	24ANB748A**30	CSPH*4812A**+UI	58MV(B,C)080–20	48,500	12.2	15.7	1400	1120
4648207	24ANB748A**30	CSPH*4812A**+UI	58MV(B,C)100–20	48,500	12.2	15.7	1400	1120
4648208	24ANB748A**30	CSPH*4812A**+UI	58MV(B,C)120–20	48,500	12.5	16.0	1400	1120
4648040	24ANB748A**30	CSPH*6012A**	58HDV080––20	49,500	13.0	16.0	1510	1190
4648041	24ANB748A**30	CSPH*6012A**	58HDV100––20	49,500	13.0	16.5	1440	1130
4648079	24ANB748A**30	CSPH*6012A**	58MEC080–16	49,500	13.0	16.0	1460	1125
4648080	24ANB748A**30	CSPH*6012A**	58MEC100–20	49,500	13.0	16.5	1425	1075
4648081	24ANB748A**30	CSPH*6012A**	58MEC120–20	50,000	13.0	16.5	1440	1270
4648037	24ANB748A**30	CSPH*6012A**	58PH*090–16	49,500	13.0	16.5	1430	1110
4648038	24ANB748A**30	CSPH*6012A**	58PH*110–20	49,500	13.1	16.5	1395	1135
4648039	24ANB748A**30	CSPH*6012A**	58PH*135–20	49,500	13.0	16.5	1420	1250
4648097	24ANB748A**30	CSPH*6012A**	58VMR120–20	49,000	13.0	16.0	1355	1155
4648123	24ANB748A**30	CSPH*6012A**	OVLAAB048112	49,000	12.7	16.0	1450	1170
4648124	24ANB748A**30	CSPH*6012A**	OVLAAB060154	49,500	13.2	17.0	1445	1170
4648036	24ANB748A**30	CSPH*6012A**+TDR		49,000	12.5	15.0	1400	1120
4648216	24ANB748A**30	CSPH*6012A**+UI	58CV(A,X)090–16	49,500	13.0	16.5	1400	1120
4648217	24ANB748A**30	CSPH*6012A**+UI	58CV(A,X)110–20	49,500	13.0	16.5	1400	1120
4648218	24ANB748A**30	CSPH*6012A**+UI	58CV(A,X)135–22	49,500	13.5	16.5	1400	1120
4648219	24ANB748A**30	CSPH*6012A**+UI	58CV(A,X)155–22	49,500	13.5	16.5	1400	1120
4648213	24ANB748A**30	CSPH*6012A**+UI	58MV(B,C)080–20	49,000	12.7	16.0	1400	1120
4648214	24ANB748A**30	CSPH*6012A**+UI	58MV(B,C)100–20	49,000	12.6	16.0	1400	1120
4648215	24ANB748A**30	CSPH*6012A**+UI	58MV(B,C)120–20	49,500	12.9	16.5	1400	1120
4648042	24ANB748A**30	FE4AN(B,F)005+UI		49,000	13.1	16.5	1400	1120
4648043	24ANB748A**30	FE4ANB006+UI		50,000	13.5	17.0	1400	1120
4648044	24ANB748A**30	FV4CN(B,F)005		49,000	13.1	16.5	1400	1120
4648045	24ANB748A**30	FV4CNB006		50,000	13.5	17.0	1400	1120
4648244	24ANB760A**30	†CNPH*6124A**	58PH*110–20	58,000	13.0	16.5	1675	1245
4648246	24ANB760A**30	CAP**6021A**	58PH*110–20	57,500	12.9	16.4	1670	1250
4648343	24ANB760A**30	CAP**6021A**	58UVB080–20	57,000	11.7	15.2	1730	1310
4648344	24ANB760A**30	CAP**6021A**	58UVB100–20	57,000	12.0	15.2	1660	1395
4648279	24ANB760A**30	CAP**6021A**	58VLR120–20	58,500	12.5	15.8	1735	1350
4648278	24ANB760A**30	CAP**6021A**	58VMR120–20	58,000	12.0	15.5	1740	1355
4648245	24ANB760A**30	CAP**6021A**+TDR		57,500	12.6	14.9	1750	1400
4648299	24ANB760A**30	CAP**6021A**+UI	58CV(A,X)110–20	57,000	12.7	16.0	1625	1300
4648297	24ANB760A**30	CAP**6021A**+UI	58MV(B,C)080–20	56,500	12.0	15.5	1625	1300
4648298	24ANB760A**30	CAP**6021A**+UI	58MV(B,C)100–20	57,000	12.3	15.5	1625	1300
4648266	24ANB760A**30	CAP**6024A**	58MEC100–20	58,000	12.7	16.0	1630	1260
4648267	24ANB760A**30	CAP**6024A**	58MEC120–20	58,500	13.0	16.0	1640	1280
4648248	24ANB760A**30	CAP**6024A**	58PH*135–20	57,500	12.9	16.0	1650	1260
4648345	24ANB760A**30	CAP**6024A**	58UVB080–20	57,000	11.7	15.2	1730	1310
4648346	24ANB760A**30	CAP**6024A**	58UVB100–20	57,000	12.0	15.2	1660	1395
4648347	24ANB760A**30	CAP**6024A**	58UVB120–20	57,000	12.2	15.5	1680	1360
4648281	24ANB760A**30	CAP**6024A**	58VLR120–20	58,500	12.6	15.9	1735	1350
4648280	24ANB760A**30	CAP**6024A**	58VMR120–20	58,000	12.2	15.5	1740	1355
4648290	24ANB760A**30	CAP**6024A**	OVLAAB060154	58,000	11.5	15.2	2110	1675
4648247	24ANB760A**30	CAP**6024A**+TDR		57,500	12.6	14.9	1750	1400
4648303	24ANB760A**30	CAP**6024A**+UI	58CV(A,X)110–20	57,500	12.2	15.7	1750	1400
4648304	24ANB760A**30	CAP**6024A**+UI	58CV(A,X)135–22	57,500	13.0	16.0	1625	1300
4648305	24ANB760A**30	CAP**6024A**+UI	58CV(A,X)155–22	58,000	13.0	16.5	1750	1400
4648300	24ANB760A**30	CAP**6024A**+UI	58MV(B,C)080–20	57,000	11.7	15.2	1750	1400
4648301	24ANB760A**30	CAP**6024A**+UI	58MV(B,C)100–20	57,000	12.0	15.2	1750	1400
4648302	24ANB760A**30	CAP**6024A**+UI	58MV(B,C)120–20	57,000	12.6	15.5	1625	1300
4648287	24ANB760A**30	CAP**6025A**	58HDV080––20	58,500	11.6	15.4	1845	1445
4648265	24ANB760A**30	CAP**6025A**	58HDV100––20	57,500	12.0	15.5	1775	1415
4648348	24ANB760A**30	CAP**6025A**	58UVB080–20	57,000	11.7	15.2	1730	1310
4648349	24ANB760A**30	CAP**6025A**	58UVB100–20	57,000	12.0	15.2	1660	1395
4648350	24ANB760A**30	CAP**6025A**	58UVB120–20	57,000	12.2	15.5	1680	1360
4648291	24ANB760A**30	CAP**6025A**	OVLAAB060154	58,000	11.5	15.2	2110	1675
4648264	24ANB760A**30	CAP**6025A**+TDR		57,500	12.2	14.5	1750	1400
4648309	24ANB760A**30	CAP**6025A**+UI	58CV(A,X)110–20	57,500	12.2	15.7	1750	1400
4648310	24ANB760A**30	CAP**6025A**+UI	58CV(A,X)135–22	58,000	12.5	16.0	1750	1400
4648311	24ANB760A**30	CAP**6025A**+UI	58CV(A,X)155–22	58,000	13.0	16.0	1750	1400
4648306	24ANB760A**30	CAP**6025A**+UI	58MV(B,C)080–20	57,000	11.7	15.2	1750	1400

See notes on page 25

COMBINATION RATINGS CONTINUED

AHRI Ref. Number	Model Number	Indoor Coil Model Number	Furnace Model Number	AHRI Standard Ratings – Cooling				
				Cooling Capacity	EER	SEER	ID CFM	
							High	Low
4648307	24ANB760A**30	CAP**6025A**+UI	58MV(B,C)100–20	57,000	12.0	15.2	1750	1400
4648308	24ANB760A**30	CAP**6025A**+UI	58MV(B,C)120–20	57,500	12.2	15.5	1750	1400
4648272	24ANB760A**30	CNPH*6024A**	58MEC100–20	58,000	12.7	16.0	1645	1275
4648273	24ANB760A**30	CNPH*6024A**	58MEC120–20	58,500	13.0	16.0	1655	1290
4648254	24ANB760A**30	CNPH*6024A**	58PH*110–20	57,500	13.0	16.5	1700	1275
4648255	24ANB760A**30	CNPH*6024A**	58PH*135–20	57,500	12.9	16.0	1670	1280
4648294	24ANB760A**30	CNPH*6024A**	OVLAAB060154	58,000	11.5	15.2	2110	1675
4648253	24ANB760A**30	CNPH*6024A**+TDR		57,500	12.6	14.9	1750	1400
4648327	24ANB760A**30	CNPH*6024A**+UI	58CV(A,X)110–20	57,000	12.8	16.0	1625	1300
4648328	24ANB760A**30	CNPH*6024A**+UI	58CV(A,X)135–22	57,500	13.0	16.0	1625	1300
4648329	24ANB760A**30	CNPH*6024A**+UI	58CV(A,X)155–22	58,000	13.1	16.5	1750	1400
4648324	24ANB760A**30	CNPH*6024A**+UI	58MV(B,C)080–20	57,000	11.7	15.2	1750	1400
4648325	24ANB760A**30	CNPH*6024A**+UI	58MV(B,C)100–20	56,500	12.3	15.5	1625	1300
4648326	24ANB760A**30	CNPH*6024A**+UI	58MV(B,C)120–20	57,000	12.6	16.0	1625	1300
4648274	24ANB760A**30	CNPH*6124A**	58MEC100–20	58,500	12.7	16.0	1625	1255
4648275	24ANB760A**30	CNPH*6124A**	58MEC120–20	58,500	13.0	16.0	1630	1270
4648257	24ANB760A**30	CNPH*6124A**	58PH*135–20	57,500	12.9	16.0	1640	1245
4648295	24ANB760A**30	CNPH*6124A**	OVLAAB060154	58,500	11.5	15.2	2110	1675
4648256	24ANB760A**30	CNPH*6124A**+TDR		58,000	12.6	15.0	1750	1400
4648333	24ANB760A**30	CNPH*6124A**+UI	58CV(A,X)110–20	57,500	12.8	16.0	1625	1300
4648334	24ANB760A**30	CNPH*6124A**+UI	58CV(A,X)135–22	57,500	13.0	16.0	1625	1300
4648335	24ANB760A**30	CNPH*6124A**+UI	58CV(A,X)155–22	58,000	13.2	16.5	1625	1300
4648330	24ANB760A**30	CNPH*6124A**+UI	58MV(B,C)080–20	57,500	11.7	15.2	1750	1400
4648331	24ANB760A**30	CNPH*6124A**+UI	58MV(B,C)100–20	57,000	12.3	15.5	1625	1300
4648332	24ANB760A**30	CNPH*6124A**+UI	58MV(B,C)120–20	57,500	12.6	15.5	1625	1300
4648288	24ANB760A**30	CNPV*6024A**	58HDV100––20	57,500	12.0	15.5	1785	1425
4648268	24ANB760A**30	CNPV*6024A**	58MEC100–20	58,000	12.7	16.0	1645	1275
4648269	24ANB760A**30	CNPV*6024A**	58MEC120–20	58,500	13.0	16.0	1655	1290
4648263	24ANB760A**30	CNPV*6024A**	58PH*110–20	57,500	13.0	16.0	1700	1425
4648250	24ANB760A**30	CNPV*6024A**	58PH*135–20	57,500	12.9	16.0	1670	1280
4648351	24ANB760A**30	CNPV*6024A**	58UVB080–20	57,000	11.7	15.5	1730	1310
4648352	24ANB760A**30	CNPV*6024A**	58UVB100–20	56,500	12.0	15.2	1660	1395
4648353	24ANB760A**30	CNPV*6024A**	58UVB120–20	57,000	12.2	15.5	1680	1360
4648283	24ANB760A**30	CNPV*6024A**	58VLR120–20	58,500	12.6	16.0	1735	1350
4648282	24ANB760A**30	CNPV*6024A**	58VMR120–20	58,000	12.2	15.5	1740	1355
4648292	24ANB760A**30	CNPV*6024A**	OVLAAB060154	58,000	11.5	15.2	2110	1675
4648249	24ANB760A**30	CNPV*6024A**+TDR		57,500	12.6	14.9	1750	1400
4648315	24ANB760A**30	CNPV*6024A**+UI	58CV(A,X)110–20	57,000	12.8	16.0	1625	1300
4648316	24ANB760A**30	CNPV*6024A**+UI	58CV(A,X)135–22	57,500	13.0	16.0	1625	1300
4648317	24ANB760A**30	CNPV*6024A**+UI	58CV(A,X)155–22	58,000	13.1	16.5	1750	1400
4648312	24ANB760A**30	CNPV*6024A**+UI	58MV(B,C)080–20	57,000	11.7	15.2	1750	1400
4648313	24ANB760A**30	CNPV*6024A**+UI	58MV(B,C)100–20	56,500	12.3	15.5	1625	1300
4648314	24ANB760A**30	CNPV*6024A**+UI	58MV(B,C)120–20	57,000	12.6	16.0	1625	1300
4648289	24ANB760A**30	CNPV*6124A**	58HDV100––20	58,500	12.2	15.7	1790	1430
4648270	24ANB760A**30	CNPV*6124A**	58MEC100–20	59,000	13.0	16.5	1650	1285
4648271	24ANB760A**30	CNPV*6124A**	58MEC120–20	59,000	13.0	16.5	1660	1300
4648262	24ANB760A**30	CNPV*6124A**	58PH*110–20	58,500	13.1	16.5	1710	1435
4648252	24ANB760A**30	CNPV*6124A**	58PH*135–20	58,000	13.0	16.5	1675	1290
4648354	24ANB760A**30	CNPV*6124A**	58UVB080–20	57,500	12.0	15.7	1730	1310
4648355	24ANB760A**30	CNPV*6124A**	58UVB100–20	57,500	12.2	15.5	1660	1395
4648356	24ANB760A**30	CNPV*6124A**	58UVB120–20	58,000	12.5	15.7	1680	1360
4648285	24ANB760A**30	CNPV*6124A**	58VLR120–20	59,000	12.8	16.2	1735	1350
4648284	24ANB760A**30	CNPV*6124A**	58VMR120–20	59,000	12.4	15.9	1740	1355
4648293	24ANB760A**30	CNPV*6124A**	OVLAAB060154	59,000	11.7	15.5	2110	1675
4648251	24ANB760A**30	CNPV*6124A**+TDR		58,500	12.7	15.0	1750	1400
4648321	24ANB760A**30	CNPV*6124A**+UI	58CV(A,X)110–20	58,000	13.0	16.0	1625	1300
4648322	24ANB760A**30	CNPV*6124A**+UI	58CV(A,X)135–22	58,000	13.2	16.5	1625	1300
4648323	24ANB760A**30	CNPV*6124A**+UI	58CV(A,X)155–22	59,000	13.3	16.5	1750	1400
4648318	24ANB760A**30	CNPV*6124A**+UI	58MV(B,C)080–20	58,000	12.0	15.5	1750	1400
4648319	24ANB760A**30	CNPV*6124A**+UI	58MV(B,C)100–20	57,500	12.5	15.5	1625	1300
4648320	24ANB760A**30	CNPV*6124A**+UI	58MV(B,C)120–20	58,000	12.8	16.0	1625	1300
4648276	24ANB760A**30	CSPH*6012A**	58MEC100–20	58,500	13.0	16.0	1650	1270
4648277	24ANB760A**30	CSPH*6012A**	58MEC120–20	59,000	13.0	16.5	1660	1290
4648259	24ANB760A**30	CSPH*6012A**	58PH*110–20	58,000	13.0	16.5	1710	1270
4648260	24ANB760A**30	CSPH*6012A**	58PH*135–20	57,500	13.0	16.4	1675	1275
4648286	24ANB760A**30	CSPH*6012A**	58VMR120–20	58,500	12.4	15.8	1740	1355
4648296	24ANB760A**30	CSPH*6012A**	OVLAAB060154	58,500	11.7	15.2	2110	1675
4648258	24ANB760A**30	CSPH*6012A**+TDR		58,000	12.6	15.0	1750	1400
4648339	24ANB760A**30	CSPH*6012A**+UI	58CV(A,X)110–20	57,500	12.9	16.0	1625	1300
4648340	24ANB760A**30	CSPH*6012A**+UI	58CV(A,X)135–22	58,000	13.1	16.5	1625	1300
4648341	24ANB760A**30	CSPH*6012A**+UI	58CV(A,X)155–22	58,500	13.2	16.5	1750	1400

See notes on page 25

COMBINATION RATINGS CONTINUED

AHRI Ref. Number	Model Number	Indoor Coil Model Number	Furnace Model Number	AHRI Standard Ratings – Cooling				
				Cooling Capacity	EER	SEER	ID CFM	
							High	Low
4648336	24ANB760A**30	CSPH*6012A**+UI	58MV(B,C)080–20	57,500	12.2	15.5	1750	1400
4648337	24ANB760A**30	CSPH*6012A**+UI	58MV(B,C)100–20	57,000	12.4	15.5	1625	1300
4648338	24ANB760A**30	CSPH*6012A**+UI	58MV(B,C)120–20	57,500	12.7	16.0	1625	1300
4648342	24ANB760A**30	FE4ANB006+UI		58,500	13.4	16.5	1750	1400
4648261	24ANB760A**30	FV4CNB006		58,500	13.4	16.5	1750	1400

EER — Energy Efficiency Ratio
SEER — Seasonal Energy Efficiency Ratio
TDR — Time–Delay Relay. In most cases, only 1 method should be used to achieve TDR function. Using more than 1 method in a system may cause degradation in performance. Use either the accessory Time–Delay Relay KAATD0101TDR or a furnace equipped with TDR. Most Carrier furnaces are equipped with TDR.
UI — User Interface

NOTES:
1. Ratings are net values reflecting the effects of circulating fan motor heat. Supplemental electric heat is not included.
2. Tested outdoor/indoor combinations have been tested in accordance with DOE test procedures for central air conditioners. Ratings for other combinations are determined under DOE computer simulation procedures.
3. Determine actual CFM values obtainable for your system by referring to fan performance data in fan coil or furnace coil literature.
4. Do not apply with capillary tube coils as performance and reliability are affected.

DETAILED COOLING CAPACITIES#

EVAPORATOR AIR		CONDENSER ENTERING AIR TEMPERATURES °F (°C)																	
		75 (23.9)			85 (29.4)			95 (35)			105 (40.6)			115 (46.1)			125 (51.7)		
CFM	EWB °F (°C)	Capacity MBtuh		Total Sys. KW**	Capacity MBtuh		Total Sys. KW**	Capacity MBtuh		Total Sys. KW**	Capacity MBtuh		Total Sys. KW**	Capacity MBtuh		Total Sys. KW**	Capacity MBtuh		Total Sys. KW**
		Total	Sens‡		Total	Sens‡		Total	Sens‡		Total	Sens‡		Total	Sens‡		Total	Sens‡	
24ANB724A30 Outdoor Section With CNPVP4217 Indoor Section – HI**																			
600	57 (13.9)	22.74	22.74	1.53	22.01	22.01	1.69	21.22	21.22	1.86	20.36	20.36	2.04	19.42	19.42	2.25	18.39	18.39	2.48
	62 (16.7)	24.16	20.32	1.54	23.17	19.64	1.69	22.12	18.95	1.86	20.99	18.24	2.05	19.77	17.52	2.25	18.48	18.30	2.48
	63 (17.2)††	24.67	16.79	1.54	23.66	16.15	1.70	22.58	15.49	1.87	21.42	14.81	2.05	20.17	14.12	2.25	18.82	13.42	2.48
	67 (19.4)	26.67	17.43	1.56	25.58	16.77	1.71	24.42	16.11	1.88	23.17	15.43	2.07	21.86	14.74	2.24	20.41	14.03	2.46
	72 (22.2)	29.46	14.49	1.58	28.27	13.87	1.73	27.00	13.23	1.90	25.64	12.58	2.09	24.17	11.92	2.29	22.61	11.26	2.52
715	57 (13.9)	24.28	24.28	1.56	23.47	23.47	1.72	22.59	22.59	1.89	21.63	21.63	2.07	20.60	20.60	2.28	19.47	19.47	2.51
	62 (16.7)	25.09	22.44	1.57	24.02	21.72	1.72	22.91	20.99	1.89	21.73	20.23	2.07	20.63	20.63	2.28	19.50	19.50	2.51
	63 (17.2)††	25.58	18.25	1.57	24.48	17.57	1.73	23.32	16.88	1.89	22.08	16.18	2.08	20.75	15.46	2.28	19.32	14.73	2.51
	67 (19.4)	27.63	18.98	1.59	26.44	18.29	1.74	25.20	17.60	1.91	23.86	16.89	2.09	22.44	16.17	2.30	20.92	15.44	2.53
	72 (22.2)	30.50	15.49	1.61	29.21	14.84	1.76	27.84	14.18	1.93	26.39	13.51	2.12	24.83	12.82	2.32	23.18	12.13	2.55
750	57 (13.9)	24.69	24.69	1.57	23.85	23.85	1.73	22.95	22.95	1.90	21.97	21.97	2.08	20.91	20.91	2.29	19.76	19.76	2.52
	62 (16.7)	25.32	23.06	1.57	24.25	22.33	1.73	23.12	21.58	1.90	22.01	22.01	2.08	20.94	20.94	2.29	19.79	19.79	2.52
	63 (17.2)††	25.80	18.68	1.58	24.68	17.99	1.74	23.50	17.29	1.90	22.24	16.58	2.09	20.89	15.85	2.29	19.44	15.11	2.52
	67 (19.4)	27.86	19.44	1.59	26.66	18.74	1.75	25.39	18.04	1.92	24.03	17.32	2.10	22.59	16.59	2.31	21.05	15.85	2.53
	72 (22.2)	30.75	15.78	1.62	29.44	15.12	1.77	28.05	14.45	1.94	26.57	13.78	2.12	24.99	13.08	2.33	23.32	12.38	2.56
800	57 (13.9)	25.24	25.24	1.58	24.37	24.37	1.74	23.43	23.43	1.91	22.42	22.42	2.10	21.32	21.32	2.30	20.13	20.13	2.53
	62 (16.7)	25.64	23.93	1.59	24.55	23.18	1.74	23.47	23.47	1.91	22.45	22.45	2.10	21.35	21.35	2.30	20.16	20.16	2.53
	63 (17.2)††	26.09	19.27	1.59	24.94	18.57	1.75	23.73	17.86	1.91	22.44	17.14	2.10	21.07	16.41	2.30	19.62	15.66	2.49
	67 (19.4)	28.16	20.08	1.61	26.93	19.37	1.76	25.62	18.66	1.93	24.25	17.93	2.11	22.77	17.19	2.32	21.21	16.44	2.54
	72 (22.2)	31.07	16.19	1.63	29.73	15.52	1.78	28.30	14.84	1.95	26.80	14.15	2.14	25.19	13.45	2.34	23.48	12.75	2.57

EVAPORATOR AIR		CONDENSER ENTERING AIR TEMPERATURES °F (°C)																	
		75 (23.9)			85 (29.4)			95 (35)			105 (40.6)			115 (46.1)			125 (51.7)		
CFM	EWB °F (°C)	Capacity MBtuh		Total Sys. KW**	Capacity MBtuh		Total Sys. KW**	Capacity MBtuh		Total Sys. KW**	Capacity MBtuh		Total Sys. KW**	Capacity MBtuh		Total Sys. KW**	Capacity MBtuh		Total Sys. KW**
		Total	Sens‡		Total	Sens‡		Total	Sens‡		Total	Sens‡		Total	Sens‡		Total	Sens‡	
24ANB724A30 Outdoor Section With CNPVP4217 Indoor Section – LOW**																			
450	57 (13.9)	16.09	16.09	1.00	15.51	15.51	1.16	14.87	14.87	1.35	14.19	14.19	1.56	13.44	13.44	1.81	12.64	12.64	2.11
	62 (16.7)	17.22	13.77	1.01	16.42	13.42	1.17	15.57	13.04	1.35	14.65	12.64	1.56	13.67	12.23	1.81	12.66	12.66	2.11
	63 (17.2)††	17.64	11.41	1.01	16.83	11.06	1.17	15.95	10.68	1.35	15.00	10.28	1.57	14.00	9.87	1.81	12.92	9.42	2.11
	67 (19.4)	19.26	11.92	1.02	18.39	11.56	1.18	17.45	11.19	1.36	16.44	10.79	1.57	15.36	10.37	1.82	14.20	9.93	2.12
	72 (22.2)	21.55	10.03	1.04	20.59	9.68	1.19	19.56	9.30	1.37	18.46	8.90	1.58	17.28	8.49	1.83	16.01	8.05	2.13
500	57 (13.9)	16.84	16.84	1.01	16.22	16.22	1.17	15.54	15.54	1.36	14.81	14.81	1.57	14.01	14.01	1.83	13.16	13.16	2.12
	62 (16.7)	17.70	14.66	1.02	16.87	14.29	1.18	15.97	13.91	1.36	15.02	13.50	1.57	14.05	14.05	1.82	13.19	13.19	2.12
	63 (17.2)††	18.12	12.03	1.02	17.27	11.67	1.18	16.35	11.28	1.36	15.37	10.88	1.57	14.31	10.45	1.82	13.19	10.00	2.12
	67 (19.4)	19.79	12.59	1.03	18.86	12.22	1.19	17.88	11.83	1.37	16.82	11.42	1.58	15.70	11.00	1.83	14.48	10.55	2.13
	72 (22.2)	22.13	10.48	1.05	21.12	10.11	1.20	20.04	9.72	1.38	18.88	9.32	1.59	17.65	8.89	1.84	16.33	8.45	2.13
585	57 (13.9)	17.96	17.96	1.03	17.27	17.27	1.19	16.53	16.53	1.37	15.73	15.73	1.59	14.86	14.86	1.84	13.93	13.93	2.14
	62 (16.7)	18.37	16.12	1.03	17.49	15.74	1.19	16.57	16.53	1.37	15.76	15.76	1.59	14.89	14.89	1.84	13.95	13.95	2.14
	63 (17.2)††	18.78	13.04	1.04	17.86	12.67	1.20	16.89	12.27	1.38	15.84	11.85	1.59	14.73	11.41	1.84	13.54	10.94	2.13
	67 (19.4)	20.49	13.67	1.05	19.50	13.29	1.20	18.45	12.89	1.38	17.33	12.47	1.59	16.14	12.02	1.84	14.87	11.56	2.14
	72 (22.2)	22.90	11.19	1.06	21.82	10.81	1.22	20.67	10.41	1.40	19.44	9.99	1.61	18.14	9.55	1.85	16.74	9.09	2.15
640	57 (13.9)	18.58	18.58	1.04	17.86	17.86	1.20	17.08	17.08	1.38	16.24	16.24	1.60	15.33	15.33	1.85	14.35	14.35	2.14
	62 (16.7)	18.75	17.02	1.04	17.89	17.89	1.20	17.11	17.11	1.38	16.27	16.27	1.60	15.36	15.36	1.85	14.38	14.38	2.14
	63 (17.2)††	19.12	13.67	1.05	18.17	13.29	1.20	17.16	12.88	1.38	16.09	12.45	1.60	14.94	12.01	1.84	13.73	11.53	2.14
	67 (19.4)	20.85	14.34	1.06	19.83	13.95	1.21	18.74	13.55	1.39	17.59	13.12	1.60	16.36	12.67	1.85	15.06	12.20	2.15
	72 (22.2)	23.29	11.62	1.07	22.18	11.23	1.23	20.99	10.83	1.41	19.72	10.41	1.62	18.38	9.96	1.86	16.95	9.49	2.16

DETAILED COOLING CAPACITIES# (CONTINUED)

24ANB724A30 Outdoor Section With CNPVP4217 Indoor Section**

Cooling Indoor Model	High Speed Cap.	Power	Low Speed Cap.	Power	Furnace Model
*CNPV*4217A**	1.00	1.00	1.00	1.00	58PH*045–08
CAP**2414A**	0.96	1.07	0.95	1.12	
CAP**2417A**	0.96	1.07	0.95	1.12	
CAP**3014A**	0.97	1.07	0.95	1.12	
CAP**3017A**	0.97	1.07	0.95	1.12	
CAP**3614A**	0.97	1.07	0.96	1.13	
CAP**3617A**	0.97	1.07	0.96	1.13	
CAP**3619A**	0.97	1.07	0.96	1.13	
CAP**3621A**	0.97	1.07	0.96	1.13	
CNPH*2417A**	0.96	1.07	0.96	1.13	
CNPH*3017A**	0.97	1.07	0.95	1.12	
CNPH*3617A**	0.97	1.07	0.95	1.12	
CNPV*2414A**	0.96	1.07	0.96	1.13	
CNPV*2417A**	0.96	1.07	0.96	1.13	
CNPV*3014A**	0.97	1.07	0.95	1.12	
CNPV*3017A**	0.97	1.07	0.95	1.12	
CNPV*3117A**	0.98	1.07	0.97	1.12	
CNPV*3617A**	0.97	1.07	0.95	1.12	
CNPV*3717A**	0.99	1.07	0.98	1.12	
CSPH*2412A**	0.97	1.07	0.97	1.13	
CSPH*3012A**	0.97	1.07	0.96	1.13	
CSPH*3612A**	0.98	1.07	0.97	1.12	
FE4AN(B,F)003	0.99	0.96	0.98	0.95	
FE4ANF002	0.99	0.98	0.99	0.96	
FE5ANB004	1.02	0.99	1.01	0.94	
FV4CN(B,F)003	0.99	0.96	0.98	0.95	
FV4CNF002	0.99	0.98	0.99	0.97	
CAP**2414A**	0.98	0.99	0.98	0.96	58CV(A,X)070–12
CAP**2417A**	0.98	0.99	0.98	0.96	58CV(A,X)070–12
CAP**3014A**	0.98	0.98	0.98	0.96	58CV(A,X)070–12
CAP**3017A**	0.98	0.99	0.98	0.96	58CV(A,X)070–12
CAP**3614A**	0.99	0.99	0.98	0.96	58CV(A,X)070–12
CAP**3617A**	0.99	0.98	0.98	0.95	58CV(A,X)070–12
CNPH*2417A**	0.98	0.99	0.98	0.96	58CV(A,X)070–12
CNPH*3017A**	0.99	0.99	0.98	0.96	58CV(A,X)070–12
CNPH*3117A**	1.01	1.00	1.00	0.96	58CV(A,X)070–12
CNPH*3617A**	0.99	0.99	0.98	0.96	58CV(A,X)070–12
CNPV*2414A**	0.98	0.99	0.98	0.96	58CV(A,X)070–12
CNPV*2417A**	0.98	0.99	0.98	0.96	58CV(A,X)070–12
CNPV*3014A**	0.98	0.98	0.98	0.96	58CV(A,X)070–12
CNPV*3017A**	0.99	1.00	0.98	0.96	58CV(A,X)070–12
CNPV*3117A**	1.01	1.00	1.00	0.96	58CV(A,X)070–12
CNPV*3617A**	0.99	1.00	0.98	0.96	58CV(A,X)070–12
CNPV*3717A**	1.02	0.99	1.01	0.96	58CV(A,X)070–12
CSPH*2412A**	0.99	1.00	0.99	0.97	58CV(A,X)070–12
CSPH*3012A**	0.99	0.99	0.99	0.96	58CV(A,X)070–12
CSPH*3612A**	1.01	0.99	1.00	0.96	58CV(A,X)070–12
CAP**2417A**	0.98	0.98	0.98	0.96	58CV(A,X)090–16
CAP**3017A**	0.99	0.98	0.98	0.95	58CV(A,X)090–16
CAP**3617A**	0.99	0.98	0.98	0.95	58CV(A,X)090–16
CAP**3619A**	0.99	0.98	0.98	0.95	58CV(A,X)090–16
CAP**3621A**	0.99	0.98	0.98	0.95	58CV(A,X)090–16
CNPH*2417A**	0.98	0.98	0.98	0.96	58CV(A,X)090–16
CNPH*3017A**	0.99	0.98	0.98	0.95	58CV(A,X)090–16
CNPH*3117A**	1.01	1.00	1.00	0.95	58CV(A,X)090–16
CNPH*3617A**	0.99	0.98	0.98	0.95	58CV(A,X)090–16
CNPV*2417A**	0.98	0.98	0.98	0.96	58CV(A,X)090–16
CNPV*3017A**	0.99	0.98	0.98	0.95	58CV(A,X)090–16
CNPV*3117A**	1.01	0.98	1.00	0.95	58CV(A,X)090–16

Cooling Indoor Model	High Speed Cap.	Power	Low Speed Cap.	Power	Furnace Model
CNPV*3617A**	0.99	0.98	0.98	0.95	58CV(A,X)090–16
CNPV*3621A**	0.99	0.98	0.98	0.95	58CV(A,X)090–16
CNPV*3717A**	1.02	0.98	1.01	0.95	58CV(A,X)090–16
CSPH*2412A**	0.99	0.98	0.99	0.97	58CV(A,X)090–16
CSPH*3012A**	1.00	0.98	0.99	0.95	58CV(A,X)090–16
CSPH*3612A**	1.01	0.98	1.00	0.96	58CV(A,X)090–16
CAP**3619A**	0.99	0.98	1.02	1.00	58CV(A,X)110–20
CAP**3621A**	0.99	0.98	1.02	0.99	58CV(A,X)110–20
CNPH*2417A**	0.98	0.99	1.02	1.03	58CV(A,X)110–20
CNPH*3017A**	0.99	1.00	1.02	1.00	58CV(A,X)110–20
CNPH*3117A**	1.01	1.00	1.04	0.99	58CV(A,X)110–20
CNPH*3617A**	0.99	1.00	1.02	1.00	58CV(A,X)110–20
CNPV*3621A**	0.99	1.00	1.02	1.00	58CV(A,X)110–20
CSPH*2412A**	0.99	1.00	1.03	1.03	58CV(A,X)110–20
CSPH*3012A**	1.00	1.01	1.03	1.01	58CV(A,X)110–20
CSPH*3612A**	1.01	1.00	1.04	1.00	58CV(A,X)110–20
CNPH*2417A**	0.98	0.99	1.01	1.00	58CV(A,X)135–22
CNPH*3017A**	0.99	0.98	1.01	0.98	58CV(A,X)135–22
CNPH*3117A**	1.01	0.98	1.04	0.98	58CV(A,X)135–22
CNPH*3617A**	0.99	0.98	1.01	0.98	58CV(A,X)135–22
CSPH*2412A**	0.99	1.00	1.02	1.01	58CV(A,X)135–22
CSPH*3012A**	1.00	0.99	1.03	1.00	58CV(A,X)135–22
CSPH*3612A**	1.01	1.00	1.03	0.98	58CV(A,X)135–22
CNPH*2417A**	0.98	0.99	1.01	1.00	58CV(A,X)155–22
CNPH*3017A**	0.99	0.98	1.02	0.98	58CV(A,X)155–22
CNPH*3117A**	1.01	0.98	1.04	0.98	58CV(A,X)155–22
CNPH*3617A**	0.99	0.98	1.02	0.98	58CV(A,X)155–22
CSPH*2412A**	0.99	1.00	1.02	1.01	58CV(A,X)155–22
CSPH*3012A**	1.00	0.99	1.03	0.99	58CV(A,X)155–22
CSPH*3612A**	1.01	0.98	1.04	0.99	58CV(A,X)155–22
CAP**3619A**	1.00	1.02	0.99	0.99	58HDV040––12
CNPH*3017A**	0.99	1.02	0.98	0.99	58HDV040––12
CNPH*3617A**	0.99	1.02	0.98	0.99	58HDV040––12
CSPH*2412A**	0.98	1.01	0.98	1.00	58HDV040––12
CSPH*3012A**	0.99	1.02	0.98	0.99	58HDV040––12
CSPH*3612A**	1.01	1.02	1.00	0.99	58HDV040––12
CAP**3619A**	0.99	1.00	0.98	0.98	58HDV060––12
CNPH*3017A**	1.00	1.03	1.00	1.01	58HDV060––12
CNPH*3617A**	1.00	1.03	1.00	1.01	58HDV060––12
CSPH*2412A**	0.99	1.02	0.99	1.01	58HDV060––12
CSPH*3012A**	1.00	1.02	0.99	1.00	58HDV060––12
CSPH*3612A**	1.02	1.02	1.02	1.01	58HDV060––12
CAP**2417A**	0.99	0.98	1.01	0.99	58MEB040–12
CAP**3014A**	1.00	1.01	1.00	0.98	58MEB040–12
CAP**3017A**	1.00	0.98	1.01	0.98	58MEB040–12
CAP**3614A**	1.00	1.01	1.01	0.98	58MEB040–12
CAP**3617A**	1.01	0.99	1.02	0.99	58MEB040–12
CNPH*2417A**	0.98	0.98	1.00	0.98	58MEB040–12
CNPH*3017A**	1.00	0.98	1.01	0.98	58MEB040–12
CNPV*2414A**	0.98	0.99	1.00	0.98	58MEB040–12
CNPV*2417A**	0.98	0.98	1.00	0.98	58MEB040–12
CNPV*3014A**	0.99	1.00	1.00	0.98	58MEB040–12
CNPV*3621A**	1.01	0.99	1.01	0.98	58MEB040–12
CSPH*2412A**	0.99	0.98	1.00	0.98	58MEB040–12
CSPH*3012A**	1.00	0.98	1.01	0.98	58MEB040–12
CSPH*3612A**	1.02	0.99	1.03	0.98	58MEB040–12
CAP**2417A**	0.99	1.00	1.00	0.98	58MEC060–12
CAP**3014A**	1.00	1.01	0.99	0.97	58MEC060–12
CAP**3017A**	1.01	1.00	1.00	0.97	58MEC060–12

Cooling Indoor Model	High Speed Cap.	Power	Low Speed Cap.	Power	Furnace Model
CAP**3614A**	1.01	1.02	1.00	0.97	58MEC060–12
CAP**3617A**	1.01	1.00	1.01	0.98	58MEC060–12
CAP**3621A**	1.02	1.02	1.02	0.98	58MEC060–12
CNPH*2417A**	0.98	0.99	0.98	0.96	58MEC060–12
CNPH*3017A**	1.01	1.00	1.00	0.97	58MEC060–12
CNPH*3617A**	1.01	1.00	1.00	0.97	58MEC060–12
CNPV*2414A**	0.98	0.99	0.98	0.96	58MEC060–12
CNPV*2417A**	0.98	0.99	0.98	0.96	58MEC060–12
CNPV*3014A**	1.00	1.01	0.99	0.97	58MEC060–12
CNPV*3017A**	1.01	1.00	1.00	0.97	58MEC060–12
CNPV*3117A**	1.03	1.02	1.03	0.98	58MEC060–12
CNPV*3621A**	1.01	1.00	1.01	0.98	58MEC060–12
CNPV*3717A**	1.04	1.01	1.05	0.99	58MEC060–12
CSPH*2412A**	1.00	1.01	0.98	0.96	58MEC060–12
CSPH*3012A**	1.01	1.02	1.00	0.98	58MEC060–12
CSPH*3612A**	1.02	1.02	1.02	0.98	58MEC060–12
CAP**2417A**	0.98	0.98	0.98	0.97	58MV(B,C)060–14
CAP**3017A**	0.98	0.97	0.98	0.96	58MV(B,C)060–14
CAP**3617A**	0.99	0.98	0.98	0.96	58MV(B,C)060–14
CAP**3619A**	0.99	1.00	0.98	0.96	58MV(B,C)060–14
CAP**3621A**	0.99	0.98	0.98	0.96	58MV(B,C)060–14
CNPH*2417A**	0.98	0.98	0.98	0.97	58MV(B,C)060–14
CNPH*3017A**	0.99	0.98	0.98	0.96	58MV(B,C)060–14
CNPH*3117A**	1.01	1.00	1.00	0.96	58MV(B,C)060–14
CNPH*3617A**	0.99	0.98	0.98	0.96	58MV(B,C)060–14
CNPV*2417A**	0.98	0.99	0.98	0.97	58MV(B,C)060–14
CNPV*3017A**	0.99	0.98	0.98	0.96	58MV(B,C)060–14
CNPV*3117A**	1.01	0.98	1.00	0.96	58MV(B,C)060–14
CNPV*3617A**	0.99	0.98	0.98	0.96	58MV(B,C)060–14
CNPV*3621A**	0.99	1.00	0.98	0.96	58MV(B,C)060–14
CNPV*3717A**	1.02	0.97	1.01	0.96	58MV(B,C)060–14
CSPH*2412A**	0.99	0.99	0.99	0.98	58MV(B,C)060–14
CSPH*3012A**	0.99	0.98	0.99	0.97	58MV(B,C)060–14
CSPH*3612A**	1.01	0.98	1.00	0.97	58MV(B,C)060–14
CAP**3619A**	0.99	1.00	0.98	0.96	58MV(B,C)080–14
CAP**3621A**	0.99	0.98	0.98	0.96	58MV(B,C)080–14
CNPH*2417A**	0.98	0.98	0.98	0.98	58MV(B,C)080–14
CNPH*3017A**	0.98	0.98	0.98	0.97	58MV(B,C)080–14
CNPH*3117A**	1.01	1.00	1.00	0.97	58MV(B,C)080–14
CNPH*3617A**	0.98	0.98	0.98	0.97	58MV(B,C)080–14
CNPV*3621A**	0.98	0.99	0.98	0.96	58MV(B,C)080–14
CSPH*2412A**	0.99	1.00	0.99	0.99	58MV(B,C)080–14
CSPH*3012A**	0.99	1.00	0.99	0.97	58MV(B,C)080–14
CSPH*3612A**	1.01	0.99	0.99	0.96	58MV(B,C)080–14
CAP**3619A**	0.99	1.00	1.01	1.00	58MV(B,C)080–20
CAP**3621A**	0.99	0.98	1.01	0.99	58MV(B,C)080–20
CNPH*2417A**	0.98	0.98	1.01	1.02	58MV(B,C)080–20
CNPH*3017A**	0.98	0.99	1.01	1.00	58MV(B,C)080–20
CNPH*3117A**	1.01	1.00	1.03	1.00	58MV(B,C)080–20
CNPH*3617A**	0.98	0.99	1.01	1.00	58MV(B,C)080–20
CNPV*3621A**	0.98	0.99	1.01	1.00	58MV(B,C)080–20
CSPH*2412A**	0.99	1.00	1.02	1.03	58MV(B,C)080–20
CSPH*3012A**	0.99	1.00	1.02	1.01	58MV(B,C)080–20
CSPH*3612A**	1.01	1.00	1.03	1.01	58MV(B,C)080–20
CAP**3619A**	0.99	1.00	1.02	1.00	58MV(B,C)100–20
CAP**3621A**	0.99	0.98	1.02	1.00	58MV(B,C)100–20
CNPH*2417A**	0.98	0.98	1.01	1.02	58MV(B,C)100–20
CNPH*3017A**	0.98	0.99	1.01	1.00	58MV(B,C)100–20
CNPH*3117A**	1.01	1.00	1.04	1.00	58MV(B,C)100–20

DETAILED COOLING CAPACITIES# (CONTINUED)

24ANB724A30 Outdoor Section With CNPVP4217 Indoor Section**

Cooling Indoor Model	High Speed Cap.	Power	Low Speed Cap.	Power	Furnace Model
CNPH*3617A**	0.98	0.99	1.01	1.00	58MV(B,C)100–20
CNPV*3621A**	0.98	0.99	1.01	1.00	58MV(B,C)100–20
CSPH*2412A**	0.99	1.00	1.02	1.02	58MV(B,C)100–20
CSPH*3012A**	0.99	1.00	1.03	1.01	58MV(B,C)100–20
CSPH*3612A**	1.01	1.00	1.03	1.00	58MV(B,C)100–20
CNPH*2417A**	0.98	0.99	1.01	1.01	58MV(B,C)120–20
CNPH*3017A**	0.99	1.00	1.01	0.99	58MV(B,C)120–20
CNPH*3117A**	1.01	1.00	1.04	1.00	58MV(B,C)120–20
CNPH*3617A**	0.99	1.00	1.01	0.99	58MV(B,C)120–20
CSPH*2412A**	0.99	1.00	1.02	1.02	58MV(B,C)120–20
CSPH*3012A**	0.99	1.00	1.03	1.01	58MV(B,C)120–20
CSPH*3612A**	1.01	1.00	1.03	0.99	58MV(B,C)120–20
CNPH*2417A**	0.98	1.00	0.98	0.97	58MVB040–14
CNPH*3017A**	0.99	0.99	0.98	0.96	58MVB040–14
CNPH*3117A**	1.01	1.00	1.00	0.96	58MVB040–14
CNPH*3617A**	0.99	0.99	0.98	0.96	58MVB040–14
CSPH*2412A**	0.99	1.00	0.99	0.98	58MVB040–14
CSPH*3012A**	0.99	0.99	0.99	0.96	58MVB040–14
CSPH*3612A**	1.01	0.99	1.00	0.96	58MVB040–14
CAP**3014A**	0.98	0.99	0.98	0.99	58PH*045–08
CAP**3614A**	0.99	1.00	0.99	0.99	58PH*045–08
CNPH*2417A**	0.98	1.00	0.98	0.99	58PH*045–08
CNPH*3017A**	0.99	1.00	0.99	0.99	58PH*045–08
CNPH*3617A**	0.99	1.00	0.99	0.99	58PH*045–08
CNPV*2414A**	0.98	1.00	0.98	0.99	58PH*045–08
CNPV*3014A**	0.98	1.00	0.98	0.99	58PH*045–08
CSPH*2412A**	0.98	1.00	0.98	0.99	58PH*045–08
CSPH*3012A**	0.99	1.00	0.99	0.99	58PH*045–08
CSPH*3612A**	1.01	0.99	1.00	0.99	58PH*045–08
CAP**2417A**	0.98	0.98	0.95	0.96	58UVB060–14
CAP**3017A**	0.99	0.98	0.95	0.95	58UVB060–14
CAP**3617A**	1.00	0.98	0.95	0.95	58UVB060–14
CAP**3619A**	1.00	1.01	0.95	0.95	58UVB060–14
CAP**3621A**	1.00	0.99	0.95	0.94	58UVB060–14
CNPV*2417A**	0.98	0.99	0.95	0.96	58UVB060–14
CNPV*3017A**	0.99	0.98	0.95	0.95	58UVB060–14
CNPV*3117A**	1.02	0.99	0.97	0.95	58UVB060–14
CNPV*3617A**	0.99	0.98	0.95	0.95	58UVB060–14
CNPV*3621A**	0.99	1.00	0.95	0.95	58UVB060–14
CNPV*3717A**	1.02	0.98	0.98	0.95	58UVB060–14
CAP**3621A**	0.98	0.97	0.95	0.94	58UVB080–14
CNPV*3621A**	0.98	0.98	0.96	0.95	58UVB080–14
CAP**3621A**	1.02	1.01	1.00	0.98	58UVB080–20
CNPV*3621A**	1.01	1.02	1.00	0.99	58UVB080–20
CAP**3621A**	1.01	0.99	1.01	0.98	58UVB100–20
CNPV*3621A**	1.00	1.01	1.01	0.99	58UVB100–20
CAP**2417A**	0.98	0.98	0.95	0.95	58VLR105–12
CAP**3017A**	1.02	1.02	0.97	0.95	58VLR105–12
CAP**3617A**	1.02	1.02	0.98	0.96	58VLR105–12
CAP**3619A**	1.02	1.02	0.98	0.96	58VLR105–12
CAP**3621A**	1.02	1.02	0.98	0.95	58VLR105–12
CNPH*2417A**	0.98	0.99	0.95	0.95	58VLR105–12
CNPH*3017A**	1.02	1.02	0.97	0.95	58VLR105–12
CNPH*3117A**	1.04	1.05	0.99	0.95	58VLR105–12
CNPH*3617A**	1.02	1.02	0.97	0.95	58VLR105–12
CNPV*2417A**	0.98	0.99	0.95	0.95	58VLR105–12
CNPV*3017A**	1.02	1.02	0.97	0.95	58VLR105–12
CNPV*3117A**	1.04	1.02	0.99	0.95	58VLR105–12
CNPV*3617A**	1.02	1.02	0.97	0.95	58VLR105–12
CNPV*3621A**	1.02	1.02	0.97	0.95	58VLR105–12

Cooling Indoor Model	High Speed Cap.	Power	Low Speed Cap.	Power	Furnace Model
CNPV*3717A**	1.05	1.02	1.00	0.95	58VLR105–12
CSPH*2412A**	0.99	1.00	0.95	0.95	58VLR105–12
CSPH*3012A**	1.02	1.03	0.99	0.97	58VLR105–12
CSPH*3612A**	1.03	1.04	0.99	0.96	58VLR105–12
CAP**2417A**	0.99	1.00	0.96	0.95	58VMR105–12
CAP**3017A**	1.01	1.02	0.96	0.95	58VMR105–12
CAP**3617A**	1.01	1.02	0.95	0.94	58VMR105–12
CAP**3619A**	1.01	1.02	0.95	0.94	58VMR105–12
CAP**3621A**	1.01	1.02	0.95	0.93	58VMR105–12
CNPH*2417A**	0.99	1.04	0.95	0.95	58VMR105–12
CNPH*3017A**	1.01	1.02	0.96	0.95	58VMR105–12
CNPH*3117A**	1.02	1.02	0.96	0.93	58VMR105–12
CNPH*3617A**	1.01	1.02	0.96	0.95	58VMR105–12
CNPV*2417A**	0.99	1.02	0.95	0.95	58VMR105–12
CNPV*3017A**	1.01	1.02	0.96	0.95	58VMR105–12
CNPV*3117A**	1.02	1.03	0.96	0.93	58VMR105–12
CNPV*3617A**	1.01	1.02	0.96	0.95	58VMR105–12
CNPV*3621A**	1.01	1.02	0.96	0.95	58VMR105–12
CNPV*3717A**	1.04	1.01	0.97	0.93	58VMR105–12
CSPH*2412A**	1.01	1.03	0.96	0.96	58VMR105–12
CSPH*3012A**	1.01	1.02	0.96	0.95	58VMR105–12
CSPH*3612A**	1.02	1.03	0.96	0.94	58VMR105–12
CAP**2417A**	1.00	1.05	0.96	0.96	OVLAAB036098
CAP**3017A**	1.01	1.04	0.96	0.96	OVLAAB036098
CAP**3617A**	1.02	1.02	0.97	0.96	OVLAAB036098
CAP**3619A**	1.02	1.02	0.97	0.96	OVLAAB036098
CAP**3621A**	1.02	1.02	0.97	0.96	OVLAAB036098
CNPH*2417A**	1.00	1.07	0.97	0.98	OVLAAB036098
CNPH*3017A**	1.01	1.04	0.96	0.95	OVLAAB036098
CNPH*3117A**	1.03	1.04	0.98	0.96	OVLAAB036098
CNPH*3617A**	1.01	1.04	0.96	0.95	OVLAAB036098
CNPV*2417A**	1.00	1.07	0.97	0.98	OVLAAB036098
CNPV*3017A**	1.01	1.04	0.96	0.95	OVLAAB036098
CNPV*3117A**	1.03	1.04	0.98	0.96	OVLAAB036098
CNPV*3617A**	1.01	1.04	0.96	0.95	OVLAAB036098
CNPV*3621A**	1.01	1.04	0.96	0.95	OVLAAB036098
CNPV*3717A**	1.04	1.03	0.99	0.95	OVLAAB036098
CSPH*2412A**	1.01	1.08	0.98	0.98	OVLAAB036098
CSPH*3012A**	1.02	1.05	0.98	0.97	OVLAAB036098
CSPH*3612A**	1.03	1.04	0.98	0.96	OVLAAB036098
CAP**2417A**	0.98	1.01	0.97	0.96	OVMAAB036098
CAP**3017A**	0.99	1.00	0.97	0.96	OVMAAB036098
CAP**3617A**	0.99	1.00	0.97	0.96	OVMAAB036098
CAP**3619A**	0.99	1.00	0.97	0.96	OVMAAB036098
CAP**3621A**	0.99	1.00	0.98	0.96	OVMAAB036098
CNPH*2417A**	0.98	1.03	0.97	0.97	OVMAAB036098
CNPH*3017A**	0.99	1.00	0.97	0.96	OVMAAB036098
CNPH*3117A**	1.01	1.02	0.99	0.96	OVMAAB036098
CNPH*3617A**	0.99	1.00	0.97	0.96	OVMAAB036098
CNPV*2417A**	0.98	1.03	0.97	0.97	OVMAAB036098
CNPV*3017A**	0.99	1.00	0.97	0.96	OVMAAB036098
CNPV*3117A**	1.01	1.02	0.99	0.96	OVMAAB036098
CNPV*3617A**	0.99	1.00	0.97	0.96	OVMAAB036098
CNPV*3621A**	0.99	1.00	0.97	0.96	OVMAAB036098
CNPV*3717A**	1.02	1.01	1.00	0.96	OVMAAB036098
CSPH*2412A**	0.99	1.02	0.98	0.98	OVMAAB036098
CSPH*3012A**	0.99	1.00	0.99	0.97	OVMAAB036098
CSPH*3612A**	1.01	1.02	0.99	0.97	OVMAAB036098
CAP**2417A**	0.98	0.98	0.98	0.96	OVMAAB042112
CAP**3017A**	0.98	0.99	0.98	0.96	OVMAAB042112

Cooling Indoor Model	High Speed Cap.	Power	Low Speed Cap.	Power	Furnace Model
CAP**3617A**	0.99	0.98	0.99	0.97	OVMAAB042112
CAP**3619A**	0.99	0.98	0.99	0.97	OVMAAB042112
CAP**3621A**	0.99	0.98	0.99	0.96	OVMAAB042112
CNPH*2417A**	0.98	0.98	0.99	0.98	OVMAAB042112
CNPH*3017A**	0.98	0.99	0.98	0.96	OVMAAB042112
CNPH*3117A**	1.01	1.00	1.01	0.97	OVMAAB042112
CNPH*3617A**	0.98	0.99	0.98	0.96	OVMAAB042112
CNPV*2417A**	0.98	0.98	0.99	0.98	OVMAAB042112
CNPV*3017A**	0.98	0.99	0.98	0.96	OVMAAB042112
CNPV*3117A**	1.01	1.00	1.01	0.97	OVMAAB042112
CNPV*3617A**	0.98	0.99	0.98	0.96	OVMAAB042112
CNPV*3621A**	0.98	0.99	0.98	0.96	OVMAAB042112
CNPV*3717A**	1.05	1.02	1.08	1.01	OVMAAB042112
CSPH*2412A**	0.98	0.99	0.99	0.99	OVMAAB042112
CSPH*3012A**	0.99	1.00	1.00	0.97	OVMAAB042112
CSPH*3612A**	1.00	0.99	1.00	0.97	OVMAAB042112

See notes on page 36

DETAILED COOLING CAPACITIES# (CONTINUED)

EVAPORATOR AIR		CONDENSER ENTERING AIR TEMPERATURES °F (°C)																	
		75 (23.9)			85 (29.4)			95 (35)			105 (40.6)			115 (46.1)			125 (51.7)		
CFM	EWB °F (°C)	Capacity MBtuh		Total Sys. KW**	Capacity MBtuh		Total Sys. KW**	Capacity MBtuh		Total Sys. KW**	Capacity MBtuh		Total Sys. KW**	Capacity MBtuh		Total Sys. KW**	Capacity MBtuh		Total Sys. KW**
		Total	Sens‡		Total	Sens‡		Total	Sens‡		Total	Sens‡		Total	Sens‡		Total	Sens‡	
24ANB736A**30 Outdoor Section With FV4CNB006 Indoor Section – HI																			
900	57 (13.9)	33.82	33.82	2.17	32.59	32.59	2.40	31.29	31.29	2.64	29.91	29.91	2.90	28.45	28.45	3.19	26.87	26.87	3.51
	62 (16.7)	36.00	31.08	2.19	34.36	30.28	2.41	32.64	29.45	2.65	30.83	28.58	2.91	28.95	27.69	3.20	26.98	26.83	3.52
	63 (17.2)††	36.79	25.72	2.20	35.11	24.92	2.42	33.35	24.09	2.66	31.49	23.24	2.92	29.55	22.36	3.20	27.48	21.44	3.52
	67 (19.4)	39.85	26.73	2.22	38.05	25.93	2.45	36.15	25.10	2.69	34.16	24.25	2.95	32.06	23.36	3.23	29.82	22.44	3.55
	72 (22.2)	44.03	22.25	2.26	42.06	21.45	2.49	39.98	20.63	2.73	37.81	19.79	2.99	35.52	18.91	3.28	33.05	17.99	3.60
975	57 (13.9)	34.90	34.90	2.19	33.61	33.61	2.42	32.25	32.25	2.66	30.81	30.81	2.92	29.28	29.28	3.21	27.62	27.62	3.53
	62 (16.7)	36.67	32.52	2.21	34.98	31.70	2.43	33.20	30.85	2.67	31.35	29.96	2.92	29.45	29.02	3.21	27.67	27.67	3.53
	63 (17.2)††	37.47	26.73	2.21	35.73	25.91	2.44	33.90	25.07	2.67	31.99	24.21	2.93	29.98	23.31	3.22	27.86	22.38	3.54
	67 (19.4)	40.55	27.80	2.24	38.68	26.98	2.46	36.71	26.14	2.70	34.67	25.28	2.96	32.49	24.37	3.25	30.19	23.44	3.57
	72 (22.2)	44.77	22.95	2.28	42.73	22.13	2.50	40.59	21.30	2.74	38.35	20.44	3.00	35.98	19.55	3.29	33.45	18.62	3.61
1050	57 (13.9)	35.89	35.89	2.21	34.54	34.54	2.43	33.12	33.12	2.67	31.61	31.61	2.94	30.02	30.02	3.23	28.29	28.29	3.55
	62 (16.7)	37.27	33.93	2.22	35.53	33.09	2.44	33.71	32.22	2.68	31.84	31.29	2.94	30.07	30.07	3.23	28.34	28.34	3.55
	63 (17.2)††	38.05	27.71	2.23	36.25	26.88	2.45	34.38	26.03	2.69	32.41	25.15	2.95	30.36	24.24	3.23	28.17	23.29	3.55
	67 (19.4)	41.15	28.84	2.26	39.22	28.01	2.48	37.20	27.16	2.72	35.09	26.28	2.98	32.87	25.37	3.26	30.52	24.42	3.58
	72 (22.2)	45.41	23.60	2.30	43.31	22.79	2.52	41.11	21.94	2.76	38.81	21.08	3.02	36.37	20.18	3.31	33.78	19.23	3.63
1200	57 (13.9)	37.63	37.63	2.24	36.17	36.17	2.47	34.64	34.64	2.71	33.02	33.02	2.97	31.30	31.30	3.26	29.44	29.44	3.59
	62 (16.7)	38.29	36.63	2.25	36.50	35.72	2.47	34.70	34.70	2.71	33.07	33.07	2.97	31.34	31.34	3.26	29.48	29.48	3.59
	63 (17.2)††	39.02	29.60	2.26	37.12	28.75	2.48	35.15	27.87	2.71	33.10	26.97	2.97	30.94	26.03	3.26	28.68	25.06	3.57
	67 (19.4)	42.13	30.85	2.28	40.10	30.00	2.51	37.99	29.13	2.74	35.79	28.23	3.00	33.47	27.30	3.29	31.03	26.32	3.61
	72 (22.2)	46.45	24.88	2.33	44.24	24.04	2.55	41.94	23.18	2.78	39.54	22.30	3.05	37.00	21.38	3.33	34.30	20.42	3.65
1350	57 (13.9)	39.10	39.10	2.28	37.54	37.54	2.50	35.91	35.91	2.74	34.19	34.19	3.00	32.36	32.36	3.29	30.39	30.39	3.62
	62 (16.7)	39.22	39.06	2.28	37.60	37.60	2.50	35.97	35.97	2.74	34.24	34.24	3.00	32.40	32.40	3.29	30.43	30.43	3.62
	63 (17.2)††	39.75	31.41	2.28	37.78	30.54	2.50	35.75	29.64	2.74	33.62	28.72	3.00	31.40	27.76	3.28	29.09	26.75	3.60
	67 (19.4)	42.88	32.79	2.31	40.78	31.92	2.53	38.60	31.03	2.77	36.33	30.12	3.03	33.94	29.16	3.31	31.43	28.15	3.63
	72 (22.2)	47.24	26.09	2.35	44.96	25.25	2.57	42.58	24.38	2.81	40.09	23.48	3.07	37.47	22.54	3.36	34.70	21.57	3.68

EVAPORATOR AIR		CONDENSER ENTERING AIR TEMPERATURES °F (°C)																	
		75 (23.9)			85 (29.4)			95 (35)			105 (40.6)			115 (46.1)			125 (51.7)		
CFM	EWB °F (°C)	Capacity MBtuh		Total Sys. KW**	Capacity MBtuh		Total Sys. KW**	Capacity MBtuh		Total Sys. KW**	Capacity MBtuh		Total Sys. KW**	Capacity MBtuh		Total Sys. KW**	Capacity MBtuh		Total Sys. KW**
		Total	Sens‡		Total	Sens‡		Total	Sens‡		Total	Sens‡		Total	Sens‡		Total	Sens‡	
24ANB736A**30 Outdoor Section With FV4CNB006 Indoor Section – LOW																			
720	57 (13.9)	25.24	25.24	1.40	22.73	22.73	1.61	20.30	20.30	1.83	17.96	17.96	2.10	15.72	15.72	2.40	13.58	13.58	2.76
	62 (16.7)	26.24	23.93	1.39	23.34	21.89	1.60	20.59	19.91	1.83	18.01	17.97	2.10	15.75	15.75	2.40	13.60	13.60	2.76
	63 (17.2)††	26.80	19.56	1.39	23.83	17.77	1.60	20.99	16.06	1.83	18.30	14.42	2.09	15.75	12.84	2.40	13.35	11.34	2.77
	67 (19.4)	29.24	20.46	1.38	26.01	18.62	1.58	22.93	16.85	1.81	20.00	15.15	2.07	17.23	13.52	2.37	14.62	11.97	2.73
	72 (22.2)	32.65	16.92	1.37	29.07	15.28	1.57	25.65	13.72	1.79	22.40	12.23	2.04	19.33	10.82	2.33	16.42	9.48	2.68
780	57 (13.9)	26.05	26.05	1.40	23.43	23.43	1.60	20.91	20.91	1.83	18.49	18.49	2.09	16.17	16.17	2.40	13.95	13.95	2.75
	62 (16.7)	26.73	25.11	1.40	23.77	22.98	1.60	20.99	20.88	1.83	18.52	18.52	2.09	16.20	16.20	2.40	13.98	13.98	2.75
	63 (17.2)††	27.28	20.39	1.39	24.23	18.54	1.60	21.32	16.76	1.83	18.57	15.06	2.09	15.97	13.44	2.40	13.52	11.88	2.77
	67 (19.4)	29.75	21.35	1.38	26.44	19.44	1.59	23.28	17.60	1.81	20.29	15.84	2.07	17.46	14.16	2.37	14.81	12.55	2.73
	72 (22.2)	33.21	17.50	1.37	29.53	15.82	1.57	26.03	14.21	1.79	22.71	12.68	2.04	19.57	11.23	2.34	16.61	9.86	2.68
840	57 (13.9)	26.78	26.78	1.40	24.08	24.08	1.61	21.47	21.47	1.83	18.97	18.97	2.09	16.58	16.58	2.39	14.29	14.29	2.75
	62 (16.7)	27.19	26.25	1.40	24.19	24.01	1.60	21.51	21.51	1.83	19.01	19.01	2.09	16.61	16.61	2.39	14.31	14.31	2.75
	63 (17.2)††	27.69	21.19	1.40	24.58	19.29	1.60	21.61	17.45	1.83	18.80	15.70	2.10	16.16	14.02	2.40	13.67	12.41	2.77
	67 (19.4)	30.19	22.21	1.39	26.81	20.24	1.59	23.59	18.35	1.81	20.54	16.53	2.07	17.66	14.79	2.37	14.97	13.12	2.73
	72 (22.2)	33.68	18.06	1.38	29.92	16.34	1.57	26.36	14.69	1.79	22.98	13.12	2.04	19.78	11.65	2.34	16.78	10.21	2.68
960	57 (13.9)	28.10	28.10	1.41	25.23	25.23	1.61	22.47	22.47	1.83	19.82	19.82	2.09	17.29	17.29	2.39	14.88	14.88	2.74
	62 (16.7)	28.15	28.15	1.41	25.28	25.28	1.61	22.51	22.51	1.83	19.85	19.85	2.09	17.32	17.32	2.39	14.90	14.90	2.74
	63 (17.2)††	28.38	22.76	1.40	25.15	20.74	1.61	22.09	18.80	1.84	19.19	16.93	2.10	16.48	15.14	2.41	13.94	13.42	2.77
	67 (19.4)	30.91	23.89	1.40	27.41	21.80	1.60	24.09	19.79	1.82	20.95	17.86	2.08	18.00	16.01	2.38	15.24	14.22	2.73
	72 (22.2)	34.46	19.14	1.39	30.57	17.34	1.58	26.89	15.61	1.80	23.40	13.97	2.05	20.12	12.41	2.34	17.04	10.92	2.69
1080	57 (13.9)	29.23	29.23	1.41	26.21	26.21	1.61	23.31	23.31	1.83	20.54	20.54	2.09	17.89	17.89	2.39	15.37	15.37	2.74
	62 (16.7)	29.28	29.28	1.41	26.26	26.26	1.61	23.35	23.35	1.83	20.57	20.57	2.09	17.92	17.92	2.39	15.39	15.39	2.74
	63 (17.2)††	28.93	24.27	1.41	25.62	22.14	1.62	22.48	20.09	1.84	19.52	18.12	2.11	16.76	16.20	2.41	14.23	14.23	2.77
	67 (19.4)	31.48	25.51	1.40	27.89	23.31	1.60	24.48	21.19	1.83	21.28	19.15	2.08	18.27	17.18	2.38	15.48	15.25	2.73
	72 (22.2)	35.07	20.17	1.39	31.07	18.29	1.59	27.30	16.50	1.81	23.73	14.79	2.05	20.38	13.16	2.35	17.23	11.60	2.69

See notes on page 36

DETAILED COOLING CAPACITIES# (CONTINUED)

24ANB736 Outdoor Section With CNPVP4821 Indoor Section

Cooling Indoor Model	High Speed Cap.	Power	Low Speed Cap.	Power	Furnace Model
*FV4CNB006	1.00	1.00	1.00	1.00	
CAP**3614A**	0.93	1.08	0.94	1.19	
CAP**3617A**	0.93	1.08	0.94	1.19	
CAP**3619A**	0.93	1.08	0.94	1.19	
CAP**3621A**	0.93	1.08	0.94	1.19	
CAP**4221A**	0.94	1.07	0.95	1.19	
CAP**4224A**	0.94	1.07	0.95	1.19	
CAP**4817A**	0.96	1.10	0.97	1.19	
CAP**4821A**	0.96	1.09	0.96	1.19	
CAP**4823A**	0.96	1.09	0.96	1.19	
CAP**4824A**	0.96	1.09	0.96	1.19	
CNPH*3617A**	0.93	1.08	0.94	1.20	
CNPH*4221A**	0.94	1.08	0.95	1.19	
CNPH*4821A**	0.96	1.08	0.97	1.20	
CNPV*3617A**	0.93	1.08	0.94	1.20	
CNPV*3621A**	0.93	1.08	0.94	1.20	
CNPV*3717A**	0.97	1.10	0.97	1.19	
CNPV*4217A**	0.95	1.09	0.96	1.20	
CNPV*4221A**	0.94	1.07	0.95	1.19	
CNPV*4821A**	0.96	1.09	0.97	1.20	
CNPV*4824A**	0.96	1.09	0.97	1.20	
CSPH*3612A**	0.95	1.09	0.96	1.19	
CSPH*4212A**	0.96	1.10	0.97	1.19	
CSPH*4812A**	0.96	1.10	0.97	1.20	
FE4AN(B,F)003	0.95	1.00	0.97	1.02	
FE4AN(B,F)005	0.99	1.00	0.99	1.01	
FE4ANB006	1.00	1.00	1.00	1.01	
FE4ANF002	0.95	1.04	0.97	1.05	
FE5ANB004	1.00	1.00	1.01	1.00	
FV4CN(B,F)003	0.95	1.00	0.97	1.02	
FV4CN(B,F)005	0.99	1.00	0.99	1.01	
FV4CNF002	0.95	1.03	0.96	1.05	
CAP**3614A**	0.94	1.04	0.96	1.05	58CV(A,X)070–12
CAP**3617A**	0.95	1.06	0.96	1.04	58CV(A,X)070–12
CAP**4817A**	0.98	1.06	0.99	1.04	58CV(A,X)070–12
CNPH*3617A**	0.94	1.06	0.96	1.05	58CV(A,X)070–12
CNPH*4221A**	0.95	1.03	0.97	1.04	58CV(A,X)070–12
CNPH*4321A**	0.98	1.04	0.99	1.04	58CV(A,X)070–12
CNPH*4821A**	0.97	1.05	0.99	1.04	58CV(A,X)070–12
CNPV*3617A**	0.94	1.06	0.96	1.05	58CV(A,X)070–12
CNPV*3717A**	0.98	1.04	0.99	1.04	58CV(A,X)070–12
CNPV*4217A**	0.95	1.04	0.97	1.03	58CV(A,X)070–12
CSPH*3612A**	0.96	1.02	0.97	1.03	58CV(A,X)070–12
CSPH*4212A**	0.97	1.03	0.99	1.04	58CV(A,X)070–12
CSPH*4812A**	0.98	1.04	0.99	1.04	58CV(A,X)070–12
CAP**3617A**	0.95	1.01	0.96	1.03	58CV(A,X)090–16
CAP**3619A**	0.95	1.00	0.96	1.03	58CV(A,X)090–16
CAP**3621A**	0.95	1.00	0.97	1.03	58CV(A,X)090–16
CAP**4221A**	0.96	1.01	0.97	1.03	58CV(A,X)090–16
CAP**4817A**	0.98	1.02	0.99	1.02	58CV(A,X)090–16
CAP**4821A**	0.97	1.03	0.98	1.02	58CV(A,X)090–16
CNPH*3617A**	0.95	1.02	0.96	1.03	58CV(A,X)090–16
CNPH*4221A**	0.96	1.02	0.97	1.03	58CV(A,X)090–16
CNPH*4321A**	0.99	1.04	1.00	1.03	58CV(A,X)090–16
CNPH*4821A**	0.97	1.02	0.99	1.02	58CV(A,X)090–16
CNPV*3617A**	0.95	1.02	0.96	1.03	58CV(A,X)090–16
CNPV*3621A**	0.95	1.04	0.96	1.03	58CV(A,X)090–16
CNPV*3717A**	0.98	1.02	0.99	1.02	58CV(A,X)090–16
CNPV*4217A**	0.97	1.03	0.98	1.03	58CV(A,X)090–16
CNPV*4221A**	0.96	1.02	0.97	1.03	58CV(A,X)090–16
CNPV*4821A**	0.97	1.02	0.99	1.02	58CV(A,X)090–16

Cooling Indoor Model	High Speed Cap.	Power	Low Speed Cap.	Power	Furnace Model
CSPH*3612A**	0.97	1.03	0.98	1.03	58CV(A,X)090–16
CSPH*4212A**	0.98	1.02	0.99	1.03	58CV(A,X)090–16
CSPH*4812A**	0.98	1.02	0.99	1.03	58CV(A,X)090–16
CAP**3619A**	0.95	1.00	0.96	1.03	58CV(A,X)110–20
CAP**3621A**	0.95	1.02	0.96	1.02	58CV(A,X)110–20
CAP**4221A**	0.96	1.02	0.97	1.03	58CV(A,X)110–20
CAP**4224A**	0.96	1.01	0.97	1.03	58CV(A,X)110–20
CAP**4821A**	0.97	1.03	0.98	1.02	58CV(A,X)110–20
CAP**4823A**	0.97	1.03	0.98	1.02	58CV(A,X)110–20
CAP**4824A**	0.97	1.03	0.98	1.02	58CV(A,X)110–20
CNPH*3617A**	0.95	1.04	0.96	1.04	58CV(A,X)110–20
CNPH*4221A**	0.96	1.02	0.97	1.04	58CV(A,X)110–20
CNPH*4321A**	0.99	1.04	1.00	1.03	58CV(A,X)110–20
CNPH*4821A**	0.97	1.02	0.99	1.02	58CV(A,X)110–20
CNPV*3621A**	0.95	1.02	0.96	1.04	58CV(A,X)110–20
CNPV*4221A**	0.96	1.01	0.97	1.04	58CV(A,X)110–20
CNPV*4324A**	0.99	1.04	1.00	1.02	58CV(A,X)110–20
CNPV*4821A**	0.97	1.02	0.99	1.02	58CV(A,X)110–20
CNPV*4824A**	0.97	1.03	0.99	1.02	58CV(A,X)110–20
CSPH*3612A**	0.97	1.03	0.98	1.03	58CV(A,X)110–20
CSPH*4212A**	0.98	1.02	0.99	1.03	58CV(A,X)110–20
CSPH*4812A**	0.98	1.03	0.99	1.03	58CV(A,X)110–20
CAP**4224A**	0.96	1.01	0.97	1.02	58CV(A,X)135–22
CAP**4823A**	0.97	1.03	0.99	1.02	58CV(A,X)135–22
CAP**4824A**	0.97	1.01	0.99	1.02	58CV(A,X)135–22
CNPH*3617A**	0.95	1.00	0.96	1.03	58CV(A,X)135–22
CNPH*4221A**	0.96	1.01	0.97	1.03	58CV(A,X)135–22
CNPH*4321A**	0.99	1.04	1.00	1.02	58CV(A,X)135–22
CNPH*4821A**	0.98	1.02	0.99	1.01	58CV(A,X)135–22
CNPV*4324A**	0.99	1.00	1.00	1.01	58CV(A,X)135–22
CNPV*4824A**	0.98	1.02	0.99	1.01	58CV(A,X)135–22
CSPH*3612A**	0.97	1.02	0.99	1.03	58CV(A,X)135–22
CSPH*4212A**	0.98	1.02	0.99	1.02	58CV(A,X)135–22
CSPH*4812A**	0.98	1.02	0.99	1.02	58CV(A,X)135–22
CAP**4224A**	0.96	1.00	0.97	1.01	58CV(A,X)155–22
CAP**4823A**	0.97	1.03	0.99	1.01	58CV(A,X)155–22
CAP**4824A**	0.97	1.00	0.99	1.01	58CV(A,X)155–22
CNPH*3617A**	0.95	1.01	0.96	1.03	58CV(A,X)155–22
CNPH*4221A**	0.96	1.01	0.97	1.02	58CV(A,X)155–22
CNPH*4321A**	0.99	1.00	1.00	1.01	58CV(A,X)155–22
CNPH*4821A**	0.98	1.00	0.99	1.01	58CV(A,X)155–22
CNPV*4324A**	0.99	1.00	1.00	1.00	58CV(A,X)155–22
CNPV*4824A**	0.98	1.00	0.99	1.01	58CV(A,X)155–22
CSPH*3612A**	0.97	1.01	0.99	1.02	58CV(A,X)155–22
CSPH*4212A**	0.98	1.01	0.99	1.01	58CV(A,X)155–22
CSPH*4812A**	0.98	1.01	0.99	1.01	58CV(A,X)155–22
CAP**3619A**	0.94	1.07	0.95	1.08	58HDV040––12
CAP**4823A**	0.96	1.10	0.97	1.09	58HDV040––12
CAP**3619A**	0.95	1.08	0.95	1.05	58HDV060––12
CAP**4823A**	0.97	1.06	0.97	1.05	58HDV060––12
CSPH*3612A**	0.97	1.06	0.97	1.06	58HDV060––12
CSPH*4212A**	0.97	1.07	0.97	1.06	58HDV060––12
CSPH*4812A**	0.98	1.06	0.97	1.05	58HDV060––12
CAP**4823A**	0.98	1.08	1.00	1.07	58HDV080––20
CAP**6025A**	1.00	1.05	1.01	1.07	58HDV080––20
CAP**4224A**	0.96	1.03	0.98	1.05	58HDV100––20
CAP**6025A**	0.99	1.05	1.00	1.05	58HDV100––20
CNPV*4324A**	1.00	1.04	1.01	1.04	58HDV100––20
CNPV*4824A**	0.98	1.04	1.00	1.05	58HDV100––20
CAP**3617A**	0.95	1.03	0.98	1.07	58MEC060–12
CAP**4817A**	0.98	1.04	1.01	1.07	58MEC060–12

Cooling Indoor Model	High Speed Cap.	Power	Low Speed Cap.	Power	Furnace Model
CNPH*3617A**	0.95	1.03	0.97	1.08	58MEC060–12
CNPH*4221A**	0.96	1.02	0.99	1.07	58MEC060–12
CNPH*4821A**	0.98	1.02	1.01	1.06	58MEC060–12
CNPV*3617A**	0.95	1.03	0.97	1.08	58MEC060–12
CNPV*3717A**	0.99	1.03	1.02	1.07	58MEC060–12
CNPV*4217A**	0.97	1.03	0.99	1.07	58MEC060–12
CNPV*4821A**	0.98	1.02	0.99	1.03	58MEC060–12
CSPH*3612A**	0.97	1.03	0.97	1.03	58MEC060–12
CSPH*4212A**	0.98	1.03	0.98	1.02	58MEC060–12
CSPH*4812A**	0.98	1.03	0.99	1.02	58MEC060–12
CAP**3617A**	0.95	1.02	0.97	1.06	58MEC080–12
CAP**4817A**	0.98	1.02	1.01	1.07	58MEC080–12
CNPH*3617A**	0.94	1.01	0.97	1.06	58MEC080–12
CNPH*4221A**	0.96	1.02	0.98	1.06	58MEC080–12
CNPH*4821A**	0.98	1.02	1.00	1.06	58MEC080–12
CNPV*3617A**	0.94	1.01	0.97	1.06	58MEC080–12
CNPV*3717A**	0.98	1.02	1.01	1.06	58MEC080–12
CNPV*4217A**	0.96	1.02	0.99	1.07	58MEC080–12
CSPH*3612A**	0.97	1.02	0.99	1.06	58MEC080–12
CSPH*4212A**	0.98	1.02	0.97	1.02	58MEC080–12
CSPH*4812A**	0.98	1.03	1.01	1.06	58MEC080–12
CAP**3617A**	0.95	1.03	0.98	1.09	58MEC080–16
CAP**4817A**	0.98	1.04	1.01	1.08	58MEC080–16
CNPH*3617A**	0.95	1.03	0.98	1.10	58MEC080–16
CNPH*4221A**	0.96	1.02	0.99	1.09	58MEC080–16
CNPH*4821A**	0.98	1.02	1.01	1.08	58MEC080–16
CNPV*3617A**	0.95	1.03	0.98	1.10	58MEC080–16
CNPV*3717A**	0.99	1.03	1.02	1.08	58MEC080–16
CNPV*4217A**	0.97	1.03	1.00	1.09	58MEC080–16
CNPV*4821A**	0.98	1.03	1.01	1.08	58MEC080–16
CSPH*3612A**	0.97	1.03	1.01	1.09	58MEC080–16
CSPH*4212A**	0.98	1.03	1.01	1.09	58MEC080–16
CSPH*4812A**	0.98	1.03	1.01	1.08	58MEC080–16
CAP**3617A**	0.95	1.02	0.96	1.04	58MV(B,C)060–14
CAP**3619A**	0.95	1.04	0.96	1.04	58MV(B,C)060–14
CAP**3621A**	0.95	1.00	0.96	1.03	58MV(B,C)060–14
CAP**4221A**	0.96	1.01	0.97	1.03	58MV(B,C)060–14
CAP**4817A**	0.98	1.03	0.99	1.03	58MV(B,C)060–14
CAP**4821A**	0.97	1.03	0.98	1.03	58MV(B,C)060–14
CNPH*3617A**	0.95	1.04	0.96	1.05	58MV(B,C)060–14
CNPH*4221A**	0.96	1.02	0.97	1.04	58MV(B,C)060–14
CNPH*4321A**	0.98	1.04	0.99	1.03	58MV(B,C)060–14
CNPH*4821A**	0.97	1.03	0.99	1.03	58MV(B,C)060–14
CNPV*3617A**	0.95	1.04	0.96	1.05	58MV(B,C)060–14
CNPV*3621A**	0.95	1.04	0.96	1.04	58MV(B,C)060–14
CNPV*3717A**	0.98	1.03	0.99	1.03	58MV(B,C)060–14
CNPV*4217A**	0.97	1.04	0.98	1.04	58MV(B,C)060–14
CNPV*4221A**	0.96	1.01	0.97	1.04	58MV(B,C)060–14
CNPV*4821A**	0.97	1.03	0.99	1.03	58MV(B,C)060–14
CSPH*3612A**	0.97	1.02	0.98	1.04	58MV(B,C)060–14
CSPH*4212A**	0.98	1.03	0.99	1.03	58MV(B,C)060–14
CSPH*4812A**	0.98	1.03	0.99	1.04	58MV(B,C)060–14
CAP**3617A**	0.95	1.04	0.96	1.05	58MV(B,C)080–14
CAP**3619A**	0.95	1.04	0.96	1.05	58MV(B,C)080–14
CAP**3621A**	0.95	1.04	0.96	1.04	58MV(B,C)080–14
CAP**4221A**	0.95	1.04	0.97	1.04	58MV(B,C)080–14
CAP**4817A**	0.97	1.03	0.99	1.05	58MV(B,C)080–14
CAP**4821A**	0.97	1.04	0.98	1.04	58MV(B,C)080–14

DETAILED COOLING CAPACITIES# (CONTINUED)

24ANB736 Outdoor Section With CNPVP4821 Indoor Section

Cooling Indoor Model	High Speed Cap.	Power	Low Speed Cap.	Power	Furnace Model
CNPH*3617A**	0.94	1.04	0.96	1.06	58MV(B,C)080 – 14
CNPH*4221A**	0.95	1.03	0.97	1.05	58MV(B,C)080 – 14
CNPH*4321A**	0.98	1.04	0.99	1.04	58MV(B,C)080 – 14
CNPH*4821A**	0.97	1.03	0.98	1.04	58MV(B,C)080 – 14
CNPV*3617A**	0.94	1.03	0.96	1.06	58MV(B,C)080 – 14
CNPV*3621A**	0.94	1.04	0.96	1.06	58MV(B,C)080 – 14

See notes on page 36

DETAILED COOLING CAPACITIES# (CONTINUED)

EVAPORATOR AIR		CONDENSER ENTERING AIR TEMPERATURES °F (°C)																	
		75 (23.9)			85 (29.4)			95 (35)			105 (40.6)			115 (46.1)			125 (51.7)		
CFM	EWB °F (°C)	Capacity MBtuh		Total Sys. KW**	Capacity MBtuh		Total Sys. KW**	Capacity MBtuh		Total Sys. KW**	Capacity MBtuh		Total Sys. KW**	Capacity MBtuh		Total Sys. KW**	Capacity MBtuh		Total Sys. KW**
		Total	Sens‡		Total	Sens‡		Total	Sens‡		Total	Sens‡		Total	Sens‡		Total	Sens‡	
24ANB748A**30 Outdoor Section With CNPH*6124** Indoor Section – HI																			
1200	57 (13.9)	44.24	44.24	3.05	42.90	42.90	3.32	41.40	41.40	3.61	39.74	39.74	3.92	37.90	37.90	4.27	35.83	35.83	4.65
	62 (16.7)	47.01	40.52	3.08	45.17	39.70	3.34	43.18	38.81	3.63	41.00	37.85	3.93	38.63	36.78	4.28	36.06	35.57	4.65
	63 (17.2)††	48.01	33.38	3.08	46.12	32.54	3.35	44.08	31.63	3.63	41.83	30.65	3.94	39.37	29.58	4.28	36.64	28.42	4.66
	67 (19.4)	52.01	34.70	3.12	49.96	33.85	3.38	47.77	32.95	3.67	45.34	31.97	3.98	42.67	30.90	4.32	39.73	29.74	4.70
	72 (22.2)	57.54	28.76	3.16	55.28	27.89	3.43	52.84	26.96	3.71	50.18	25.96	4.02	47.25	24.88	4.37	44.00	23.69	4.75
1300	57 (13.9)	45.59	45.59	3.10	44.16	44.16	3.36	42.59	42.59	3.65	40.85	40.85	3.96	38.91	38.91	4.31	36.74	36.74	4.69
	62 (16.7)	47.81	42.31	3.11	45.90	41.48	3.38	43.86	40.58	3.66	41.63	39.58	3.97	39.23	38.47	4.31	36.79	36.79	4.69
	63 (17.2)††	48.79	34.60	3.12	46.83	33.75	3.38	44.71	32.83	3.67	42.39	31.83	3.98	39.85	30.75	4.32	37.05	29.58	4.70
	67 (19.4)	52.83	36.01	3.16	50.71	35.14	3.42	48.44	34.23	3.70	45.91	33.23	4.01	43.18	32.15	4.35	40.14	30.97	4.73
	72 (22.2)	58.42	29.58	3.20	56.08	28.70	3.47	53.55	27.76	3.75	50.72	26.71	4.06	47.78	25.64	4.41	44.44	24.44	4.78
1400	57 (13.9)	46.80	46.80	3.14	45.30	45.30	3.40	43.66	43.66	3.69	41.83	41.83	4.01	39.82	39.82	4.35	37.55	37.55	4.73
	62 (16.7)	48.51	44.05	3.15	46.56	43.20	3.41	44.47	42.27	3.70	42.21	41.23	4.01	39.88	39.88	4.35	37.61	37.61	4.73
	63 (17.2)††	49.46	35.79	3.16	47.43	34.91	3.42	45.25	33.98	3.71	42.87	32.98	4.02	0.00	0.00	0.00	37.39	30.70	4.73
	67 (19.4)	53.53	37.27	3.19	51.34	36.40	3.45	49.00	35.48	3.74	46.30	34.42	4.05	43.59	33.37	4.39	40.49	32.18	4.77
	72 (22.2)	59.18	30.37	3.24	56.75	29.47	3.50	54.15	28.52	3.79	51.15	27.43	4.10	48.22	26.38	4.44	44.81	25.17	4.82
1600	57 (13.9)	48.91	48.91	3.22	47.28	47.28	3.48	45.51	45.51	3.77	43.54	43.54	4.09	41.37	41.37	4.43	38.93	38.93	4.81
	62 (16.7)	49.73	47.36	3.23	47.72	46.44	3.49	45.63	45.38	3.77	43.61	43.61	4.09	41.43	41.43	4.43	38.98	38.98	4.81
	63 (17.2)††	50.52	38.04	3.23	48.39	37.15	3.49	46.11	36.21	3.78	43.61	35.18	4.08	40.91	34.08	4.42	37.94	32.86	4.80
	67 (19.4)	54.65	39.69	3.27	52.34	38.80	3.53	49.87	37.86	3.81	47.19	36.84	4.12	44.26	35.73	4.46	41.05	34.52	4.84
	72 (22.2)	60.37	31.86	3.32	57.84	30.95	3.58	55.10	29.97	3.86	52.13	28.92	4.17	48.92	27.80	4.51	45.36	26.57	4.89
1800	57 (13.9)	50.69	50.69	3.30	48.94	48.94	3.56	47.06	47.06	3.85	44.96	44.96	4.16	42.64	42.64	4.51	40.06	40.06	4.89
	62 (16.7)	50.87	50.38	3.30	49.01	49.01	3.56	47.13	47.13	3.85	45.02	45.02	4.16	42.70	42.70	4.51	40.10	40.10	4.89
	63 (17.2)††	51.34	40.19	3.30	49.12	39.29	3.56	46.77	38.34	3.85	44.20	37.30	4.15	41.40	36.16	4.49	38.36	34.91	4.87
	67 (19.4)	55.49	42.00	3.34	53.13	41.12	3.60	50.48	40.13	3.88	47.77	39.12	4.19	44.74	37.98	4.53	41.46	36.75	4.91
	72 (22.2)	61.28	33.26	3.39	58.64	32.33	3.65	55.80	31.34	3.93	52.73	30.28	4.24	49.37	29.13	4.58	45.74	27.90	4.96

EVAPORATOR AIR		CONDENSER ENTERING AIR TEMPERATURES °F (°C)																	
		75 (23.9)			85 (29.4)			95 (35)			105 (40.6)			115 (46.1)			125 (51.7)		
CFM	EWB °F (°C)	Capacity MBtuh		Total Sys. KW**	Capacity MBtuh		Total Sys. KW**	Capacity MBtuh		Total Sys. KW**	Capacity MBtuh		Total Sys. KW**	Capacity MBtuh		Total Sys. KW**	Capacity MBtuh		Total Sys. KW**
		Total	Sens‡		Total	Sens‡		Total	Sens‡		Total	Sens‡		Total	Sens‡		Total	Sens‡	
24ANB748A**30 Outdoor Section With CNPH*6124** Indoor Section – LOW																			
960	57 (13.9)	33.76	33.76	2.02	31.12	31.12	2.27	28.49	28.49	2.54	25.87	25.87	2.85	23.27	23.27	3.20	20.69	20.69	3.61
	62 (16.7)	35.22	31.85	2.02	32.16	29.71	2.26	29.13	27.59	2.53	26.15	25.48	2.84	23.31	23.31	3.20	20.72	20.72	3.61
	63 (17.2)††	35.99	26.01	2.01	32.84	24.14	2.26	29.72	22.29	2.53	26.63	20.47	2.84	23.59	18.68	3.19	20.61	16.92	3.61
	67 (19.4)	39.32	27.23	2.00	35.89	25.30	2.24	32.49	23.39	2.51	29.14	21.51	2.81	25.84	19.66	3.16	22.60	17.85	3.57
	72 (22.2)	43.93	22.52	1.99	40.11	20.79	2.22	36.34	19.08	2.48	32.60	17.41	2.77	28.93	15.77	3.11	25.33	14.17	3.51
1040	57 (13.9)	34.83	34.83	2.03	32.08	32.08	2.28	29.34	29.34	2.55	26.63	26.63	2.85	23.93	23.93	3.20	21.25	21.25	3.61
	62 (16.7)	35.87	33.37	2.03	32.73	31.14	2.27	29.65	28.92	2.54	26.67	26.67	2.85	23.97	23.97	3.20	21.29	21.29	3.61
	63 (17.2)††	36.60	27.06	2.03	33.36	25.13	2.27	30.17	23.22	2.54	27.01	21.34	2.85	23.91	19.49	3.20	20.86	17.68	3.62
	67 (19.4)	39.97	28.36	2.02	36.45	26.36	2.25	32.98	24.39	2.52	29.55	22.45	2.82	26.18	20.54	3.17	22.87	18.66	3.58
	72 (22.2)	44.63	23.24	2.00	40.72	21.46	2.24	36.83	19.71	2.49	33.03	18.00	2.79	29.28	16.32	3.13	25.60	14.67	3.52
1120	57 (13.9)	35.80	35.80	2.05	32.96	32.96	2.29	30.13	30.13	2.56	27.32	27.32	2.86	24.53	24.53	3.21	21.76	21.76	3.61
	62 (16.7)	36.46	34.83	2.04	33.28	32.51	2.29	30.18	30.18	2.56	27.36	27.36	2.86	24.57	24.57	3.21	21.80	21.80	3.61
	63 (17.2)††	37.12	28.08	2.04	33.82	26.09	2.28	30.56	24.13	2.55	27.34	22.19	2.86	24.18	20.29	3.22	21.09	18.42	3.63
	67 (19.4)	40.53	29.45	2.03	36.94	27.40	2.27	33.39	25.36	2.53	29.89	23.36	2.83	26.46	21.40	3.18	23.10	19.46	3.59
	72 (22.2)	45.23	23.93	2.02	41.22	22.11	2.25	37.27	20.32	2.51	33.40	18.57	2.80	29.57	16.85	3.14	25.83	15.16	3.53
1280	57 (13.9)	37.52	37.52	2.07	34.50	34.50	2.31	31.50	31.50	2.58	28.52	28.52	2.88	25.56	25.56	3.22	22.64	22.64	3.62
	62 (16.7)	37.62	37.50	2.07	34.56	34.56	2.31	31.55	31.55	2.58	28.56	28.56	2.88	25.60	25.60	3.22	22.67	22.67	3.62
	63 (17.2)††	37.99	30.05	2.07	34.57	27.95	2.31	31.21	25.88	2.58	27.89	23.84	2.88	24.64	21.82	3.24	21.47	19.84	3.65
	67 (19.4)	41.45	31.57	2.06	37.73	29.40	2.30	34.06	27.25	2.56	30.46	25.14	2.86	26.92	23.05	3.20	23.48	21.01	3.61
	72 (22.2)	46.20	25.24	2.05	42.06	23.35	2.28	37.97	21.48	2.53	33.95	19.65	2.82	30.03	17.87	3.16	26.18	16.11	3.56
1440	57 (13.9)	38.99	38.99	2.10	35.81	35.81	2.34	32.65	32.65	2.60	29.52	29.52	2.90	26.43	26.43	3.24	23.37	23.37	3.64
	62 (16.7)	39.05	39.05	2.10	35.86	35.86	2.34	32.70	32.70	2.60	29.57	29.57	2.90	26.47	26.47	3.24	23.40	23.40	3.64
	63 (17.2)††	38.68	31.94	2.10	35.17	29.73	2.34	31.71	27.56	2.61	28.32	25.41	2.91	25.01	23.28	3.26	21.80	21.16	3.67
	67 (19.4)	42.16	33.60	2.09	38.35	31.32	2.33	34.59	29.06	2.59	30.90	26.84	2.88	27.30	24.64	3.23	23.78	22.46	3.63
	72 (22.2)	46.94	26.50	2.08	42.68	24.53	2.31	38.50	22.60	2.56	34.39	20.70	2.85	30.37	18.84	3.19	26.43	17.02	3.58

DETAILED COOLING CAPACITIES# (CONTINUED)

24ANB748A30 Outdoor Section With CNPH*6124** Indoor Section**

Cooling Indoor Model	High Speed Cap.	Power	Low Speed Cap.	Power	Furnace Model
*CNPH*6124A**	1.00	1.00	1.00	1.00	58MV(B,C)100–20
CAP**4817A**	0.98	1.03	0.98	1.10	
CAP**4821A**	0.99	1.08	0.98	1.11	
CAP**4823A**	0.97	1.06	0.98	1.11	
CAP**4824A**	0.97	1.06	0.98	1.11	
CAP**6021A**	0.99	1.04	0.99	1.11	
CAP**6025A**	0.99	1.04	0.99	1.11	
CNPH*4821A**	0.98	1.06	0.98	1.11	
CNPH*6024A**	0.99	1.04	0.99	1.11	
CNPV*4821A**	0.98	1.06	0.98	1.11	
CNPV*4821A**	0.98	1.06	0.98	1.11	
CNPV*4824A**	0.98	1.06	0.98	1.11	
CNPV*6024A**	0.99	1.04	0.99	1.11	
CNPV*6124A**	1.00	1.02	1.00	1.10	
CSPH*4812A**	0.98	1.03	0.99	1.11	
CSPH*6012A**	1.00	1.05	0.99	1.10	
FE4AN(B,F)005	1.00	1.00	1.00	0.97	
FE4AN(B,F)005	1.00	1.00	1.00	0.97	
FE4ANB006	1.02	0.99	1.01	0.95	
FE4ANB006	1.02	0.99	1.01	0.96	
FV4CN(B,F)005	1.00	1.00	1.00	0.97	
FV4CNB006	1.02	0.99	1.01	0.95	
CAP**4817A**	0.99	1.04	1.00	1.00	58CV(A,X)090–16
CAP**4821A**	0.98	1.03	0.99	0.99	58CV(A,X)090–16
CAP**6021A**	1.00	1.01	1.00	0.99	58CV(A,X)090–16
CNPH*4821A**	0.98	0.99	0.99	0.99	58CV(A,X)090–16
CNPH*6024A**	1.00	1.01	1.00	0.98	58CV(A,X)090–16
CNPH*6124A**	1.01	1.02	1.01	1.00	58CV(A,X)090–16
CNPV*4821A**	0.98	0.99	0.99	0.99	58CV(A,X)090–16
CSPH*4812A**	0.99	1.00	1.00	1.00	58CV(A,X)090–16
CSPH*6012A**	1.01	1.02	1.01	0.99	58CV(A,X)090–16
CAP**4821A**	0.98	0.99	0.99	0.99	58CV(A,X)110–20
CAP**4823A**	0.98	0.99	0.99	0.99	58CV(A,X)110–20
CAP**4824A**	0.98	0.99	0.99	0.98	58CV(A,X)110–20
CAP**6021A**	1.00	1.01	1.00	0.98	58CV(A,X)110–20
CAP**6024A**	1.00	1.01	1.00	0.98	58CV(A,X)110–20
CAP**6025A**	1.00	1.01	1.00	0.98	58CV(A,X)110–20
CNPH*4821A**	0.99	1.00	0.99	0.98	58CV(A,X)110–20
CNPH*6024A**	1.00	1.01	1.00	0.97	58CV(A,X)110–20
CNPH*6124A**	1.00	0.97	0.99	0.96	58CV(A,X)110–20
CNPV*4821A**	0.99	1.00	0.99	0.98	58CV(A,X)110–20
CNPV*4824A**	0.99	1.00	0.99	0.98	58CV(A,X)110–20
CNPV*6024A**	1.00	1.01	1.00	0.97	58CV(A,X)110–20
CNPV*6124A**	1.01	0.97	1.00	0.95	58CV(A,X)110–20
CSPH*4812A**	0.99	1.00	1.00	0.99	58CV(A,X)110–20
CSPH*6012A**	1.01	1.02	1.01	0.98	58CV(A,X)110–20
CAP**4823A**	0.98	0.99	0.99	0.98	58CV(A,X)135–22
CAP**4824A**	0.99	1.00	0.99	0.97	58CV(A,X)135–22
CAP**6024A**	1.01	1.02	1.00	0.97	58CV(A,X)135–22
CAP**6025A**	1.01	1.02	1.00	0.97	58CV(A,X)135–22
CNPH*4821A**	0.99	1.00	0.99	0.97	58CV(A,X)135–22
CNPH*6024A**	1.01	1.02	1.00	0.96	58CV(A,X)135–22
CNPH*6124A**	1.01	0.98	1.01	0.98	58CV(A,X)135–22
CNPV*4824A**	0.99	1.00	0.99	0.97	58CV(A,X)135–22
CNPV*6024A**	1.01	1.02	1.00	0.96	58CV(A,X)135–22
CNPV*6124A**	1.02	0.99	1.01	0.96	58CV(A,X)135–22
CSPH*4812A**	1.00	1.01	1.00	0.98	58CV(A,X)135–22
CSPH*6012A**	1.01	0.98	1.01	0.97	58CV(A,X)135–22
CAP**4823A**	0.99	1.00	0.99	0.97	58CV(A,X)155–22
CAP**4824A**	0.99	1.00	0.99	0.96	58CV(A,X)155–22
CAP**6024A**	1.01	1.01	1.00	0.96	58CV(A,X)155–22

Cooling Indoor Model	High Speed Cap.	Power	Low Speed Cap.	Power	Furnace Model
CAP**6025A**	1.01	0.98	1.00	0.96	58CV(A,X)155–22
CNPH*4821A**	0.99	1.00	1.00	0.97	58CV(A,X)155–22
CNPH*6024A**	1.01	1.00	1.00	0.95	58CV(A,X)155–22
CNPH*6124A**	1.01	0.98	1.01	0.97	58CV(A,X)155–22
CNPV*4824A**	0.99	1.00	1.00	0.97	58CV(A,X)155–22
CNPV*6024A**	1.01	0.98	1.00	0.95	58CV(A,X)155–22
CNPV*6124A**	1.02	0.99	1.03	0.96	58CV(A,X)155–22
CSPH*4812A**	1.00	1.01	1.00	0.97	58CV(A,X)155–22
CSPH*6012A**	1.01	0.98	1.01	0.96	58CV(A,X)155–22
CAP**4823A**	0.98	1.03	0.99	1.02	58HDV080––20
CAP**6025A**	1.01	1.06	1.00	1.01	58HDV080––20
CAP**6025A**	1.01	1.06	1.01	1.02	58HDV080––20
CSPH*4812A**	0.99	1.04	1.00	1.02	58HDV080––20
CSPH*6012A**	1.01	1.02	1.01	1.01	58HDV080––20
CAP**6025A**	1.00	1.01	1.00	1.00	58HDV100––20
CAP**6025A**	1.00	1.01	1.00	1.00	58HDV100––20
CNPV*4824A**	0.98	1.03	0.99	1.00	58HDV100––20
CNPV*6024A**	1.00	1.01	1.00	1.00	58HDV100––20
CNPV*6124A**	1.02	1.03	1.01	0.99	58HDV100––20
CSPH*4812A**	0.99	1.04	1.00	1.01	58HDV100––20
CSPH*6012A**	1.01	1.02	1.01	1.00	58HDV100––20
CAP**4821A**	0.98	1.03	0.99	1.01	58MEC080–16
CNPH*4821A**	0.98	1.03	0.98	0.97	58MEC080–16
CNPH*6024A**	1.00	1.04	1.00	1.00	58MEC080–16
CNPH*6124A**	1.01	1.01	0.99	0.97	58MEC080–16
CNPV*4821A**	0.98	1.03	0.99	1.00	58MEC080–16
CSPH*4812A**	0.99	1.04	1.00	1.01	58MEC080–16
CSPH*6012A**	1.01	1.02	1.01	1.00	58MEC080–16
CAP**4821A**	0.98	0.99	0.98	0.97	58MEC100–20
CAP**4824A**	0.98	0.99	0.98	0.96	58MEC100–20
CAP**6024A**	1.01	1.02	0.99	0.96	58MEC100–20
CNPH*4821A**	0.99	1.00	0.99	0.97	58MEC100–20
CNPH*6024A**	1.01	1.02	1.00	0.97	58MEC100–20
CNPH*6124A**	1.01	1.02	1.00	0.97	58MEC100–20
CNPV*4821A**	0.99	1.00	0.99	0.97	58MEC100–20
CNPV*4824A**	0.99	1.00	0.99	0.97	58MEC100–20
CNPV*6024A**	1.01	1.02	1.00	0.97	58MEC100–20
CNPV*6124A**	1.02	1.03	1.01	0.96	58MEC100–20
CSPH*4812A**	0.99	1.00	0.99	0.97	58MEC100–20
CSPH*6012A**	1.01	1.02	1.00	0.96	58MEC100–20
CAP**4824A**	0.99	1.00	1.01	1.01	58MEC120–20
CAP**6024A**	1.01	1.02	1.03	1.01	58MEC120–20
CNPH*4821A**	0.99	1.00	1.01	1.01	58MEC120–20
CNPH*6024A**	1.01	1.02	1.03	1.00	58MEC120–20
CNPH*6124A**	1.01	1.02	1.03	1.01	58MEC120–20
CNPV*4824A**	0.99	1.00	1.01	1.01	58MEC120–20
CNPV*4824A**	0.99	1.00	1.01	1.01	58MEC120–20
CNPV*6024A**	1.01	1.02	1.03	1.00	58MEC120–20
CNPV*6124A**	1.02	0.99	1.04	1.00	58MEC120–20
CSPH*4812A**	1.00	1.01	1.01	1.01	58MEC120–20
CSPH*6012A**	1.02	1.03	1.04	1.01	58MEC120–20
CAP**4821A**	0.98	1.04	0.99	1.02	58MV(B,C)080–20
CAP**4823A**	0.98	1.05	0.99	1.02	58MV(B,C)080–20
CAP**4824A**	0.98	1.05	0.99	1.01	58MV(B,C)080–20
CAP**6021A**	1.00	1.04	1.00	1.01	58MV(B,C)080–20
CAP**6024A**	1.00	1.05	1.00	1.01	58MV(B,C)080–20
CAP**6025A**	1.00	1.05	1.00	1.01	58MV(B,C)080–20
CNPH*4821A**	0.98	1.03	0.99	1.01	58MV(B,C)080–20
CNPH*6024A**	1.00	1.03	1.00	1.00	58MV(B,C)080–20
CNPH*6124A**	1.00	1.05	1.00	1.01	58MV(B,C)080–20
CNPV*4821A**	0.98	1.03	0.99	1.01	58MV(B,C)080–20

Cooling Indoor Model	High Speed Cap.	Power	Low Speed Cap.	Power	Furnace Model
CNPV*4824A**	0.98	1.05	0.99	1.01	58MV(B,C)080–20
CNPV*6024A**	1.00	1.04	1.00	1.00	58MV(B,C)080–20
CNPV*6124A**	1.01	1.04	1.01	1.00	58MV(B,C)080–20
CSPH*4812A**	0.99	1.06	1.00	1.02	58MV(B,C)080–20
CSPH*6012A**	1.00	1.03	1.01	1.01	58MV(B,C)080–20
CAP**4821A**	0.98	1.05	0.99	1.01	58MV(B,C)100–20
CAP**4823A**	0.98	1.05	0.99	1.01	58MV(B,C)100–20
CAP**4824A**	0.98	1.05	0.99	1.01	58MV(B,C)100–20
CAP**6021A**	1.00	1.05	1.00	1.01	58MV(B,C)100–20
CAP**6024A**	1.00	1.05	1.00	1.00	58MV(B,C)100–20
CAP**6025A**	1.00	1.05	1.00	1.00	58MV(B,C)100–20
CNPH*4821A**	0.98	1.04	0.99	1.00	58MV(B,C)100–20
CNPH*6024A**	1.00	1.04	1.00	1.00	58MV(B,C)100–20
CNPV*4821A**	0.98	1.04	0.99	1.00	58MV(B,C)100–20
CNPV*4824A**	0.98	1.05	0.99	1.00	58MV(B,C)100–20
CNPV*6024A**	1.00	1.04	1.00	1.00	58MV(B,C)100–20
CNPV*6124A**	1.00	0.98	1.00	0.97	58MV(B,C)100–20
CSPH*4812A**	0.99	1.06	1.00	1.01	58MV(B,C)100–20
CSPH*6012A**	1.00	1.04	1.01	1.01	58MV(B,C)100–20
CAP**4823A**	0.98	1.03	0.99	1.00	58MV(B,C)120–20
CAP**4824A**	0.98	1.03	0.99	0.99	58MV(B,C)120–20
CAP**6024A**	1.00	1.02	1.00	0.99	58MV(B,C)120–20
CAP**6025A**	1.00	1.03	1.00	0.99	58MV(B,C)120–20
CNPH*4821A**	0.98	1.03	0.99	0.99	58MV(B,C)120–20
CNPH*6024A**	1.00	1.02	1.00	0.98	58MV(B,C)120–20
CNPH*6124A**	1.00	0.98	0.99	0.97	58MV(B,C)120–20
CNPV*4824A**	0.98	1.03	0.99	0.99	58MV(B,C)120–20
CNPV*6024A**	1.00	1.02	1.00	0.98	58MV(B,C)120–20
CNPV*6124A**	1.01	0.97	1.00	0.96	58MV(B,C)120–20
CSPH*4812A**	0.99	1.04	1.00	1.00	58MV(B,C)120–20
CSPH*6012A**	1.01	1.03	1.01	0.99	58MV(B,C)120–20
CAP**4824A**	0.98	1.03	0.99	0.99	58PH*090–16
CAP**6021A**	1.00	1.01	1.00	0.99	58PH*090–16
CNPH*4821A**	0.99	1.00	0.99	0.98	58PH*090–16
CNPH*6124A**	1.01	1.00	1.00	0.98	58PH*090–16
CNPV*6124A**	1.02	0.99	1.01	0.98	58PH*090–16
CSPH*4812A**	0.99	1.00	0.99	0.98	58PH*090–16
CSPH*6012A**	1.01	1.02	1.01	0.99	58PH*090–16
CAP**4821A**	0.98	0.99	0.99	0.99	58PH*110–20
CAP**4824A**	0.98	0.99	0.99	0.98	58PH*110–20
CAP**6021A**	1.00	1.01	1.00	0.98	58PH*110–20
CAP**6024A**	1.00	1.00	1.00	0.98	58PH*110–20
CNPH*4821A**	0.99	1.00	1.00	0.99	58PH*110–20
CNPH*6024A**	1.00	1.00	1.01	0.99	58PH*110–20
CNPH*6124A**	1.01	0.97	1.01	0.99	58PH*110–20
CNPV*4821A**	0.99	1.00	1.00	0.99	58PH*110–20
CNPV*4824A**	0.99	1.00	1.00	0.99	58PH*110–20
CNPV*6024A**	1.00	1.00	1.01	0.99	58PH*110–20
CNPV*6124A**	1.02	0.98	1.03	0.98	58PH*110–20
CSPH*4812A**	0.99	1.00	1.00	0.99	58PH*110–20
CSPH*6012A**	1.01	1.01	1.01	0.98	58PH*110–20
CAP**6024A**	1.00	1.01	1.01	1.02	58PH*135–20
CNPH*6024A**	1.00	1.01	1.03	1.02	58PH*135–20
CNPH*6124A**	1.01	0.99	1.03	1.02	58PH*135–20
CNPV*4824A**	0.98	0.99	1.00	1.01	58PH*135–20
CNPV*6024A**	1.00	1.01	1.03	1.02	58PH*135–20
CNPV*6124A**	1.02	0.98	1.04	1.02	58PH*135–20
CSPH*4812A**	0.99	1.00	1.01	1.03	58PH*135–20
CSPH*6012A**	1.01	1.02	1.03	1.01	58PH*135–20
CNPV*4824A**	0.97	1.02	0.94	0.95	58UVB080–20
CNPV*4824A**	0.98	1.03	0.98	0.98	58UVB100–20

DETAILED COOLING CAPACITIES# (CONTINUED)

24ANB748A30 Outdoor Section With CNPH*6124** Indoor Section**

Cooling Indoor Model	High Speed Cap.	Power	Low Speed Cap.	Power	Furnace Model
CNPV*4824A**	0.98	0.99	0.94	0.94	58UVB120–20
CAP**4821A**	0.98	1.03	0.99	1.01	58VLR120–20
CAP**4824A**	0.98	0.99	0.99	1.00	58VLR120–20
CAP**6021A**	1.00	1.01	1.00	1.00	58VLR120–20
CNPV*4821A**	0.98	0.99	1.00	1.01	58VLR120–20
CNPV*4824A**	0.98	0.99	1.00	1.01	58VLR120–20
CNPV*6024A**	1.00	1.01	1.01	1.01	58VLR120–20
CNPV*6124A**	1.01	1.02	1.03	1.00	58VLR120–20
CAP**4821A**	0.97	1.02	0.99	1.02	58VMR120–20
CAP**4824A**	0.97	1.02	0.99	1.01	58VMR120–20
CAP**6021A**	1.00	1.01	1.00	1.01	58VMR120–20
CNPV*4821A**	0.98	1.03	0.99	1.01	58VMR120–20
CNPV*4824A**	0.98	1.03	0.99	1.01	58VMR120–20
CNPV*6024A**	0.99	1.00	1.00	1.00	58VMR120–20
CNPV*6124A**	1.01	1.02	1.01	1.00	58VMR120–20
CSPH*4812A**	0.99	1.04	1.00	1.02	58VMR120–20
CSPH*6012A**	1.00	1.01	1.01	1.01	58VMR120–20
CAP**4821A**	0.97	1.04	0.99	1.05	OVLAAB048112
CAP**4823A**	0.97	1.04	0.99	1.05	OVLAAB048112
CAP**4824A**	0.98	1.05	0.99	1.04	OVLAAB048112
CAP**6021A**	1.00	1.05	1.00	1.04	OVLAAB048112
CAP**6024A**	1.00	1.05	1.00	1.04	OVLAAB048112
CAP**6025A**	1.00	1.05	1.00	1.04	OVLAAB048112
CNPH*4821A**	0.98	1.05	0.99	1.04	OVLAAB048112
CNPH*6024A**	1.00	1.05	1.00	1.03	OVLAAB048112
CNPH*6124A**	1.00	1.05	1.01	1.05	OVLAAB048112
CNPV*4821A**	0.98	1.05	0.99	1.04	OVLAAB048112
CNPV*4824A**	0.98	1.05	0.99	1.04	OVLAAB048112
CNPV*6024A**	1.00	1.05	1.00	1.03	OVLAAB048112
CNPV*6124A**	1.01	1.04	1.01	1.03	OVLAAB048112
CSPH*4812A**	0.99	1.06	1.00	1.05	OVLAAB048112
CSPH*6012A**	1.00	1.03	1.01	1.04	OVLAAB048112
CAP**4824A**	0.99	1.00	1.00	1.00	OVLAAB060154
CAP**6024A**	1.01	1.00	1.01	1.00	OVLAAB060154
CAP**6025A**	1.01	1.00	1.01	1.00	OVLAAB060154
CNPH*4821A**	0.99	1.00	1.00	0.99	OVLAAB060154
CNPH*6024A**	1.01	1.00	1.01	0.99	OVLAAB060154
CNPH*6124A**	1.01	1.00	1.01	0.99	OVLAAB060154
CNPV*4824A**	0.99	1.00	1.00	0.99	OVLAAB060154
CNPV*6024A**	1.01	1.00	1.01	0.99	OVLAAB060154
CNPV*6124A**	1.02	0.99	1.03	0.99	OVLAAB060154
CSPH*4812A**	1.00	1.01	1.01	1.01	OVLAAB060154
CSPH*6012A**	1.01	1.00	1.03	0.99	OVLAAB060154

See notes on page 36

DETAILED COOLING CAPACITIES# (CONTINUED)

EVAPORATOR AIR		CONDENSER ENTERING AIR TEMPERATURES °F (°C)																	
		75 (23.9)			85 (29.4)			95 (35)			105 (40.6)			115 (46.1)			125 (51.7)		
CFM	EWB °F (°C)	Capacity MBtuh		Total Sys. KW**	Capacity MBtuh		Total Sys. KW**	Capacity MBtuh		Total Sys. KW**	Capacity MBtuh		Total Sys. KW**	Capacity MBtuh		Total Sys. KW**	Capacity MBtuh		Total Sys. KW**
		Total	Sens‡		Total	Sens‡		Total	Sens‡		Total	Sens‡		Total	Sens‡		Total	Sens‡	
24ANB760A**30 Outdoor Section With CNPH*6124A** Indoor Section – HI																			
1500	57 (13.9)	52.75	52.75	3.58	51.54	51.54	3.93	50.11	50.11	4.31	48.43	48.43	4.72	46.45	46.45	5.17	44.13	44.13	5.66
	62 (16.7)	55.58	48.38	3.61	53.83	47.84	3.96	51.86	47.19	4.33	49.60	46.41	4.73	47.03	45.46	5.17	44.17	44.17	5.66
	63 (17.2)††	56.71	39.71	3.62	54.90	39.06	3.97	52.85	38.31	4.34	50.49	37.43	4.74	47.78	36.42	5.18	44.71	35.27	5.66
	67 (19.4)	61.30	41.24	3.67	59.31	40.59	4.02	57.06	39.84	4.39	54.35	38.91	4.79	51.57	37.97	5.24	48.22	36.82	5.72
	72 (22.2)	67.60	33.98	3.75	65.39	33.22	4.09	62.89	32.37	4.47	60.03	31.40	4.87	56.79	30.30	5.31	53.09	29.05	5.80
1625	57 (13.9)	54.24	54.24	3.64	52.95	52.95	3.99	51.44	51.44	4.37	49.66	49.66	4.77	47.57	47.57	5.22	45.12	45.12	5.71
	62 (16.7)	56.46	50.47	3.66	54.64	49.92	4.01	52.62	49.27	4.38	50.30	48.46	4.78	47.74	47.30	5.22	45.19	45.19	5.71
	63 (17.2)††	57.54	41.12	3.67	55.66	40.47	4.02	53.48	39.69	4.39	51.08	38.83	4.79	48.29	37.82	5.23	45.13	36.66	5.71
	67 (19.4)	62.16	42.75	3.72	60.10	42.10	4.07	57.76	41.35	4.44	54.79	40.34	4.84	52.09	39.48	5.29	48.64	38.32	5.77
	72 (22.2)	68.53	34.91	3.80	66.25	34.16	4.14	63.63	33.29	4.52	60.68	32.31	4.92	57.33	31.20	5.36	53.30	29.86	5.84
1750	57 (13.9)	55.59	55.59	3.69	54.21	54.21	4.04	52.63	52.63	4.42	50.75	50.75	4.83	48.57	48.57	5.27	46.01	46.01	5.76
	62 (16.7)	57.23	52.49	3.71	55.38	51.94	4.06	53.25	51.24	4.43	50.98	50.38	4.83	48.64	48.64	5.28	46.07	46.07	5.77
	63 (17.2)††	58.26	42.49	3.72	56.29	41.82	4.06	53.98	41.02	4.43	51.58	40.19	4.84	48.72	39.18	5.27	45.49	38.02	5.75
	67 (19.4)	62.90	44.21	3.77	60.77	43.56	4.12	58.35	42.81	4.49	55.61	41.94	4.89	52.51	40.94	5.33	48.99	39.79	5.81
	72 (22.2)	69.33	35.81	3.85	66.95	35.05	4.19	64.25	34.18	4.56	61.22	33.19	4.97	57.77	32.08	5.41	53.42	30.65	5.88
2000	57 (13.9)	57.92	57.92	3.80	56.39	56.39	4.15	54.54	54.54	4.52	52.62	52.62	4.93	50.25	50.25	5.38	47.50	47.50	5.87
	62 (16.7)	58.62	56.31	3.81	56.71	55.68	4.15	54.72	54.72	4.52	52.70	52.70	4.93	50.32	50.32	5.38	47.55	47.55	5.87
	63 (17.2)††	59.39	45.08	3.81	57.31	44.43	4.16	54.98	43.68	4.53	52.35	42.81	4.93	49.39	41.80	5.36	46.04	40.62	5.84
	67 (19.4)	64.09	47.01	3.87	61.82	46.36	4.21	59.27	45.62	4.58	56.40	44.75	4.98	53.09	43.73	5.42	49.53	42.59	5.90
	72 (22.2)	70.58	37.51	3.94	68.07	36.74	4.29	65.24	35.87	4.66	62.05	34.87	5.06	58.47	33.75	5.50	54.41	32.48	5.98
2250	57 (13.9)	59.81	59.81	3.90	58.18	58.18	4.25	56.30	56.30	4.62	53.98	53.98	5.03	51.59	51.59	5.48	48.66	48.66	5.96
	62 (16.7)	59.84	59.84	3.90	58.25	58.25	4.25	56.37	56.37	4.63	53.96	53.96	5.03	51.65	51.65	5.48	48.72	48.72	5.96
	63 (17.2)††	60.23	47.54	3.90	58.07	46.90	4.25	55.65	46.16	4.61	52.85	45.25	5.01	49.89	44.26	5.45	46.46	43.04	5.92
	67 (19.4)	64.95	49.65	3.96	62.60	49.03	4.30	59.95	48.30	4.67	56.98	47.44	5.07	53.34	46.30	5.50	49.95	45.25	5.98
	72 (22.2)	71.53	39.11	4.04	68.89	38.33	4.38	65.94	37.45	4.75	62.64	36.46	5.15	58.93	35.34	5.58	54.76	34.06	6.06

EVAPORATOR AIR		CONDENSER ENTERING AIR TEMPERATURES °F (°C)																	
		75 (23.9)			85 (29.4)			95 (35)			105 (40.6)			115 (46.1)			125 (51.7)		
CFM	EWB °F (°C)	Capacity MBtuh		Total Sys. KW**	Capacity MBtuh		Total Sys. KW**	Capacity MBtuh		Total Sys. KW**	Capacity MBtuh		Total Sys. KW**	Capacity MBtuh		Total Sys. KW**	Capacity MBtuh		Total Sys. KW**
		Total	Sens‡		Total	Sens‡		Total	Sens‡		Total	Sens‡		Total	Sens‡		Total	Sens‡	
24ANB760A**30 Outdoor Section With CNPH*6124A** Indoor Section – LOW																			
1200	57 (13.9)	40.42	40.42	2.41	37.04	37.04	2.72	33.67	33.67	3.06	30.32	30.32	3.45	27.03	27.03	3.89	23.78	23.78	4.41
	62 (16.7)	41.72	38.50	2.40	37.89	35.71	2.71	34.11	32.93	3.05	30.43	30.24	3.44	27.07	27.07	3.89	23.82	23.82	4.40
	63 (17.2)††	42.56	31.28	2.40	38.62	28.87	2.71	34.71	26.50	3.05	30.87	24.16	3.44	27.13	21.87	3.89	23.49	19.65	4.42
	67 (19.4)	46.26	32.68	2.39	41.97	30.19	2.69	37.72	27.73	3.02	33.54	25.31	3.40	29.47	22.94	3.85	25.52	20.64	4.36
	72 (22.2)	51.35	26.72	2.37	46.58	24.52	2.67	41.88	22.37	2.99	37.25	20.25	3.37	32.73	18.19	3.80	28.33	16.18	4.30
1300	57 (13.9)	41.61	41.61	2.42	38.10	38.10	2.73	34.60	34.60	3.07	31.14	31.14	3.45	27.72	27.72	3.89	24.36	24.36	4.41
	62 (16.7)	42.43	40.29	2.42	38.53	37.38	2.73	34.72	34.50	3.07	31.19	31.19	3.45	27.76	27.76	3.89	24.39	24.39	4.41
	63 (17.2)††	43.20	32.52	2.42	39.17	30.04	2.72	35.18	27.59	3.06	31.26	25.17	3.45	27.45	22.82	3.90	23.74	20.51	4.43
	67 (19.4)	46.92	34.00	2.40	42.53	31.43	2.70	38.19	28.89	3.04	33.94	26.40	3.42	29.79	23.96	3.86	25.76	21.57	4.37
	72 (22.2)	52.06	27.56	2.39	47.19	25.31	2.68	42.39	23.09	3.01	37.67	20.92	3.38	33.07	18.81	3.81	28.59	16.76	4.31
1400	57 (13.9)	42.69	42.69	2.44	39.06	39.06	2.74	35.45	35.45	3.08	31.86	31.86	3.46	28.33	28.33	3.90	24.87	24.87	4.41
	62 (16.7)	43.10	42.00	2.43	39.18	38.97	2.74	35.50	35.50	3.08	31.91	31.91	3.46	28.38	28.38	3.90	24.90	24.90	4.41
	63 (17.2)††	43.75	33.73	2.43	39.64	31.18	2.74	35.58	28.65	3.08	31.59	26.16	3.47	27.71	23.73	3.91	23.95	21.35	4.44
	67 (19.4)	47.48	35.29	2.42	43.01	32.64	2.72	38.60	30.03	3.05	34.26	27.45	3.43	30.06	24.94	3.87	25.98	22.48	4.39
	72 (22.2)	52.67	28.37	2.41	47.70	26.06	2.70	42.82	23.80	3.02	38.02	21.58	3.39	33.34	19.42	3.82	28.80	17.31	4.33
1600	57 (13.9)	44.57	44.57	2.47	40.72	40.72	2.77	36.88	36.88	3.10	33.11	33.11	3.48	29.38	29.38	3.92	25.73	25.73	4.42
	62 (16.7)	44.65	44.65	2.47	40.78	40.78	2.77	36.94	36.94	3.10	33.15	33.15	3.48	29.42	29.42	3.92	25.77	25.77	4.42
	63 (17.2)††	44.65	36.06	2.47	40.41	33.36	2.77	36.23	30.69	3.11	32.13	28.06	3.49	28.15	25.48	3.94	24.32	22.94	4.46
	67 (19.4)	48.40	37.78	2.45	43.78	34.98	2.75	39.26	32.22	3.08	34.82	29.50	3.46	30.50	26.83	3.90	26.34	24.21	4.41
	72 (22.2)	53.64	29.91	2.44	48.53	27.51	2.73	43.50	25.15	3.06	38.57	22.84	3.42	33.77	20.58	3.85	29.12	18.39	4.35
1800	57 (13.9)	46.13	46.13	2.50	42.09	42.09	2.80	38.10	38.10	3.13	34.13	34.13	3.50	30.25	30.25	3.94	26.44	26.44	4.44
	62 (16.7)	46.19	46.19	2.50	42.15	42.15	2.79	38.13	38.13	3.13	34.18	34.18	3.50	30.29	30.29	3.94	26.47	26.47	4.44
	63 (17.2)††	45.34	38.27	2.50	40.99	35.43	2.80	36.72	32.62	3.14	32.56	29.85	3.52	28.53	27.12	3.97	24.67	24.48	4.49
	67 (19.4)	49.11	40.17	2.49	44.40	37.22	2.78	39.78	34.32	3.11	35.25	31.45	3.49	30.86	28.62	3.93	26.66	25.82	4.44
	72 (22.2)	54.38	31.38	2.48	49.15	28.89	2.77	44.01	26.44	3.09	38.97	24.04	3.46	34.08	21.70	3.88	29.34	19.42	4.38

DETAILED COOLING CAPACITIES# (CONTINUED)

24ANB760A30 Outdoor Section With CNPH*6124A** Indoor Section**

Cooling Indoor Model	High Speed Cap.	Power	Low Speed Cap.	Power	Furnace Model
*CNPH*6124A**	1.00	1.00	1.00	1.00	58PH*110–20
CAP**6021A**	0.99	1.02	0.99	1.12	
CAP**6024A**	0.99	1.02	0.99	1.12	
CAP**6025A**	0.99	1.06	0.99	1.12	
CNPH*6024A**	0.99	1.02	0.99	1.12	
CNPH*6124A**	1.00	1.03	1.00	1.13	
CNPV*6024A**	0.99	1.02	0.99	1.12	
CNPV*6124A**	1.01	1.03	1.01	1.13	
CSPH*6012A**	1.00	1.03	1.00	1.12	
FE4ANB006	1.01	0.98	1.02	1.00	
FV4CNB006	1.01	0.98	1.02	1.00	
CAP**6021A**	0.98	1.01	1.00	1.02	58CV(A,X)110–20
CAP**6024A**	0.99	1.06	1.01	1.04	58CV(A,X)110–20
CAP**6025A**	0.99	1.06	1.01	1.04	58CV(A,X)110–20
CNPH*6024A**	0.98	1.00	1.00	1.01	58CV(A,X)110–20
CNPH*6124A**	0.99	1.01	1.00	1.01	58CV(A,X)110–20
CNPV*6024A**	0.98	1.00	1.00	1.01	58CV(A,X)110–20
CNPV*6124A**	1.00	1.00	1.01	1.00	58CV(A,X)110–20
CSPH*6012A**	0.99	1.00	1.01	1.02	58CV(A,X)110–20
CAP**6024A**	0.99	0.99	1.00	1.00	58CV(A,X)135–22
CAP**6025A**	1.00	1.04	1.01	1.02	58CV(A,X)135–22
CNPH*6024A**	0.99	0.99	1.00	1.00	58CV(A,X)135–22
CNPH*6124A**	0.99	0.99	1.00	1.00	58CV(A,X)135–22
CNPV*6024A**	0.99	0.99	1.00	1.00	58CV(A,X)135–22
CNPV*6124A**	1.00	0.98	1.01	0.99	58CV(A,X)135–22
CSPH*6012A**	1.00	0.99	1.01	1.00	58CV(A,X)135–22
CAP**6024A**	1.00	1.00	1.01	1.01	58CV(A,X)155–22
CAP**6025A**	1.00	1.00	1.01	1.01	58CV(A,X)155–22
CNPH*6024A**	1.00	0.99	1.01	1.00	58CV(A,X)155–22
CNPH*6124A**	1.00	0.98	1.01	1.00	58CV(A,X)155–22
CNPV*6024A**	1.00	0.99	1.01	1.00	58CV(A,X)155–22
CNPV*6124A**	1.02	0.99	1.02	1.00	58CV(A,X)155–22
CSPH*6012A**	1.01	0.99	1.02	1.01	58CV(A,X)155–22

Cooling Indoor Model	High Speed Cap.	Power	Low Speed Cap.	Power	Furnace Model
CAP**6025A**	1.01	1.13	1.01	1.09	58HDV080––20
CAP**6025A**	0.99	1.07	1.01	1.07	58HDV100––20
CAP**6025A**	1.01	1.09	1.01	1.08	58HDV100––20
CNPV*6024A**	0.99	1.07	1.01	1.06	58HDV100––20
CNPV*6124A**	1.01	1.07	1.02	1.06	58HDV100––20
CAP**6024A**	1.00	1.02	1.00	1.02	58MEC100–20
CNPH*6024A**	1.00	1.02	1.00	1.02	58MEC100–20
CNPH*6124A**	1.01	1.03	1.00	1.01	58MEC100–20
CNPV*6024A**	1.00	1.02	1.00	1.02	58MEC100–20
CNPV*6124A**	1.02	1.02	1.01	1.01	58MEC100–20
CSPH*6012A**	1.01	1.01	1.01	1.02	58MEC100–20
CAP**6024A**	1.01	1.01	1.00	1.01	58MEC120–20
CNPH*6024A**	1.01	1.01	1.00	1.01	58MEC120–20
CNPH*6124A**	1.01	1.01	1.01	1.02	58MEC120–20
CNPV*6024A**	1.01	1.01	1.00	1.01	58MEC120–20
CNPV*6124A**	1.02	1.02	1.02	1.01	58MEC120–20
CSPH*6012A**	1.02	1.02	1.01	1.01	58MEC120–20
CAP**6021A**	0.97	1.06	0.99	1.04	58MV(B,C)080–20
CAP**6024A**	0.98	1.09	1.00	1.08	58MV(B,C)080–20
CAP**6025A**	0.98	1.09	1.00	1.08	58MV(B,C)080–20
CNPH*6024A**	0.98	1.09	1.00	1.07	58MV(B,C)080–20
CNPH*6124A**	0.99	1.10	1.01	1.09	58MV(B,C)080–20
CNPV*6024A**	0.98	1.09	1.00	1.07	58MV(B,C)080–20
CNPV*6124A**	1.00	1.08	1.02	1.08	58MV(B,C)080–20
CSPH*6012A**	0.99	1.06	1.01	1.08	58MV(B,C)080–20
CAP**6021A**	0.98	1.04	0.99	1.04	58MV(B,C)100–20
CAP**6024A**	0.98	1.06	1.00	1.07	58MV(B,C)100–20
CAP**6025A**	0.98	1.06	1.00	1.07	58MV(B,C)100–20
CNPH*6024A**	0.97	1.03	0.99	1.03	58MV(B,C)100–20
CNPH*6124A**	0.98	1.04	1.00	1.04	58MV(B,C)100–20
CNPV*6024A**	0.97	1.03	0.99	1.03	58MV(B,C)100–20
CNPV*6124A**	0.99	1.03	1.01	1.04	58MV(B,C)100–20
CSPH*6012A**	0.98	1.03	1.00	1.04	58MV(B,C)100–20

Cooling Indoor Model	High Speed Cap.	Power	Low Speed Cap.	Power	Furnace Model
CAP**6024A**	0.98	1.01	1.00	1.03	58MV(B,C)120–20
CAP**6025A**	0.99	1.06	1.00	1.05	58MV(B,C)120–20
CNPH*6024A**	0.98	1.01	1.00	1.02	58MV(B,C)120–20
CNPH*6124A**	0.99	1.02	1.00	1.02	58MV(B,C)120–20
CNPV*6024A**	0.98	1.01	1.00	1.02	58MV(B,C)120–20
CNPV*6124A**	1.00	1.02	1.01	1.02	58MV(B,C)120–20
CSPH*6012A**	0.99	1.01	1.00	1.02	58MV(B,C)120–20
CAP**6021A**	0.99	1.00	0.99	0.99	58PH*110–20
CNPH*6024A**	0.99	0.99	1.00	1.00	58PH*110–20
CNPV*6024A**	0.99	0.99	1.01	1.03	58PH*110–20
CNPV*6124A**	1.01	1.00	1.03	1.04	58PH*110–20
CSPH*6012A**	1.00	1.00	1.00	0.99	58PH*110–20
CAP**6024A**	0.99	1.00	0.99	1.00	58PH*135–20
CNPH*6024A**	0.99	1.00	1.00	1.01	58PH*135–20
CNPH*6124A**	0.99	1.00	1.00	1.01	58PH*135–20
CNPV*6024A**	0.99	1.00	1.00	1.01	58PH*135–20
CNPV*6124A**	1.00	1.00	1.01	1.00	58PH*135–20
CSPH*6012A**	0.99	0.99	1.00	1.00	58PH*135–20
CAP**6021A**	1.01	1.05	1.01	1.06	58VLR120–20
CAP**6024A**	1.01	1.04	1.01	1.05	58VLR120–20
CNPV*6024A**	1.01	1.04	1.01	1.05	58VLR120–20
CNPV*6124A**	1.02	1.03	1.02	1.04	58VLR120–20
CAP**6021A**	1.00	1.08	1.00	1.07	58VMR120–20
CAP**6024A**	1.00	1.07	1.00	1.06	58VMR120–20
CNPV*6024A**	1.00	1.07	1.00	1.06	58VMR120–20
CNPV*6124A**	1.02	1.07	1.02	1.06	58VMR120–20
CSPH*6012A**	1.01	1.06	1.01	1.06	58VMR120–20
CAP**6024A**	1.00	1.13	1.02	1.11	OVLAAB060154
CAP**6025A**	1.00	1.13	1.02	1.11	OVLAAB060154
CNPH*6024A**	1.00	1.13	1.02	1.11	OVLAAB060154
CNPH*6124A**	1.01	1.14	1.03	1.12	OVLAAB060154
CNPV*6024A**	1.00	1.13	1.02	1.11	OVLAAB060154
CNPV*6124A**	1.02	1.13	1.04	1.12	OVLAAB060154
CSPH*6012A**	1.01	1.12	1.03	1.11	OVLAAB060154

† Total and sensible capacities are net capacities. Blower motor heat has been subtracted.

‡ Sensible capacities shown are based on 80°F (27°C) entering air at the indoor coil. For sensible capacities at other than 80°F (27°C), deduct 835 Btuh (245 kW) per 1000 CFM (480 L/S) of indoor coil air for each degree below 80°F (27°C), or add 835 Btuh (245 kW) per 1000 CFM (480 L/S) of indoor coil air per degree above 80°F (27°C).

Detailed cooling capacities are based on indoor and outdoor unit at the same elevation per AHRI standard 210/240–2008. If additional tubing length and/or indoor unit is located above outdoor unit, a slight variation in capacity may occur.

** System kw is total of indoor and outdoor unit kilowatts.

EWB — Entering Wet Bulb

NOTE: When the required data fall between the published data, interpolation may be performed. Extrapolation is not an acceptable practice.

CONDENSER ONLY RATINGS*

SST °F (°C)		CONDENSER ENTERING AIR TEMPERATURES °F (°C)							
		55 (12.78)	65 (18.33)	75 (23.89)	85 (29.44)	95 (35.0)	105 (40.56)	115 (46.11)	125 (51.67)
24ANB724A30 – HI**									
30 (–1.11)	TCG	21.50	20.40	19.20	18.00	16.80	15.50	14.20	12.80
	SDT	68.60	78.50	88.30	98.10	108.00	117.80	127.80	137.90
	KW	0.99	1.14	1.30	1.47	1.66	1.87	2.11	2.39
35 (1.67)	TCG	23.70	22.50	21.20	20.00	18.60	17.20	15.80	14.30
	SDT	69.90	79.70	89.50	99.20	109.00	118.80	128.80	138.80
	KW	1.01	1.16	1.32	1.50	1.69	1.90	2.14	2.43
40 (4.44)	TCG	26.10	24.80	23.40	22.00	20.60	19.00	17.50	15.90
	SDT	71.20	81.00	90.60	100.40	110.20	120.00	129.80	139.70
	KW	1.03	1.18	1.35	1.52	1.71	1.93	2.17	2.46
45 (7.22)	TCG	28.80	27.30	25.80	24.20	22.60	21.00	19.30	17.60
	SDT	72.60	82.20	91.90	101.60	111.30	121.00	130.80	140.70
	KW	1.05	1.21	1.37	1.54	1.74	1.96	2.20	2.49
50 (10.0)	TCG	31.60	29.90	28.30	26.60	24.90	23.10	21.30	19.50
	SDT	74.00	83.70	93.30	102.90	112.50	122.10	131.90	141.70
	KW	1.08	1.23	1.40	1.57	1.77	1.98	2.24	2.53
55 (12.78)	TCG	34.60	32.80	31.00	29.20	27.30	25.40	23.40	21.50
	SDT	75.60	85.10	94.60	104.20	113.70	123.30	133.00	142.70
	KW	1.11	1.26	1.42	1.60	1.79	2.02	2.27	2.56
60 (15.56)	TCG	37.80	35.80	33.90	31.90	29.90	27.80	25.70	23.60
	SDT	77.10	86.50	96.00	105.50	115.00	124.50	134.10	143.80
	KW	1.14	1.29	1.45	1.63	1.83	2.05	2.31	2.60
24ANB724A30 – LOW**									
30 (–1.11)	TCG	14.20	13.40	12.50	11.60	10.70	9.70	8.70	7.60
	SDT	64.60	74.40	84.20	94.00	103.90	113.70	123.60	133.60
	KW	0.65	0.79	0.94	1.10	1.28	1.49	1.74	2.05
35 (1.67)	TCG	16.00	15.10	14.20	13.20	12.20	11.10	10.00	8.80
	SDT	65.70	75.50	85.30	95.10	104.90	114.70	124.60	134.60
	KW	0.67	0.81	0.96	1.12	1.30	1.51	1.77	2.08
40 (4.44)	TCG	18.00	17.00	16.00	14.90	13.80	12.60	11.40	10.20
	SDT	66.90	76.70	86.40	96.20	106.00	115.80	125.60	135.70
	KW	0.69	0.83	0.97	1.13	1.32	1.53	1.79	2.10
45 (7.22)	TCG	20.20	19.10	18.00	16.80	15.60	14.30	13.00	11.60
	SDT	68.20	77.90	87.70	97.40	107.10	116.90	126.70	136.70
	KW	0.71	0.85	0.99	1.15	1.34	1.56	1.81	2.13
50 (10.0)	TCG	22.50	21.30	20.10	18.80	17.50	16.10	14.60	0.00
	SDT	69.60	79.30	88.90	98.70	108.30	118.00	127.80	0.00
	KW	0.73	0.87	1.01	1.17	1.36	1.58	1.84	0.00
55 (12.78)	TCG	25.10	23.70	22.40	21.00	19.50	18.00	16.50	14.80
	SDT	71.10	80.70	90.30	99.90	109.50	119.10	128.90	138.60
	KW	0.76	0.89	1.03	1.19	1.38	1.59	1.86	2.17
60 (15.56)	TCG	27.80	26.30	24.90	23.30	21.80	20.10	18.40	16.70
	SDT	72.60	82.10	91.70	101.20	110.80	120.30	130.00	139.80
	KW	0.79	0.92	1.05	1.21	1.40	1.62	1.88	2.20
24ANB736A30 – HI**									
30 (–1.11)	TCG	32.30	30.50	28.60	26.70	24.70	22.70	20.60	18.50
	SDT	69.50	79.00	88.50	98.00	107.50	117.00	126.50	136.00
	KW	1.48	1.70	1.92	2.16	2.42	2.71	3.04	3.41
35 (1.67)	TCG	35.90	33.90	31.90	29.80	27.60	25.40	23.20	20.90
	SDT	70.90	80.40	89.90	99.30	108.70	118.20	127.60	137.10
	KW	1.51	1.73	1.96	2.20	2.46	2.75	3.09	3.47
40 (4.44)	TCG	39.80	37.60	35.40	33.10	30.80	28.40	26.00	23.60
	SDT	72.50	81.90	91.30	100.70	110.00	119.40	128.80	138.20
	KW	1.55	1.77	1.99	2.24	2.50	2.80	3.13	3.52
45 (7.22)	TCG	44.00	41.60	39.20	36.70	34.20	31.60	29.00	26.40
	SDT	74.10	83.50	92.80	102.10	111.40	120.70	130.00	139.30
	KW	1.59	1.81	2.03	2.28	2.55	2.85	3.18	3.57
50 (10.0)	TCG	48.50	45.90	43.20	40.50	37.80	35.10	32.30	29.50
	SDT	75.90	85.10	94.30	103.60	112.80	122.00	131.20	140.50
	KW	1.64	1.85	2.08	2.32	2.59	2.90	3.24	3.63
55 (12.78)	TCG	53.30	50.40	47.60	44.70	41.80	38.80	35.80	32.80
	SDT	77.70	86.80	95.90	105.10	114.30	123.40	132.50	141.70
	KW	1.69	1.90	2.12	2.37	2.64	2.95	3.30	3.69
60 (15.56)	TCG	58.40	55.30	52.20	49.10	46.00	42.80	39.60	36.30
	SDT	79.50	88.60	97.60	106.70	115.80	124.90	133.90	143.00
	KW	1.74	1.95	2.17	2.42	2.70	3.01	3.36	3.75

See notes on page 39

CONDENSER ONLY RATINGS*

SST °F (°C)		CONDENSER ENTERING AIR TEMPERATURES °F (°C)							
		55 (12.78)	65 (18.33)	75 (23.89)	85 (29.44)	95 (35.0)	105 (40.56)	115 (46.11)	125 (51.67)
24ANB736A30 – LOW**									
30 (−1.11)	TCG	20.70	19.30	17.90	16.50	15.10	13.60	12.20	10.60
	SDT	62.20	71.70	81.30	90.90	100.50	110.10	119.60	129.20
	KW	1.05	1.23	1.42	1.63	1.85	2.10	2.39	2.74
35 (1.67)	TCG	23.30	21.80	20.20	18.70	17.10	15.50	13.90	12.20
	SDT	63.00	72.60	82.10	91.60	101.20	110.70	120.20	129.70
	KW	1.04	1.22	1.41	1.60	1.82	2.07	2.36	2.69
40 (4.44)	TCG	26.20	24.50	22.80	21.00	19.30	17.50	15.70	13.90
	SDT	64.00	73.50	82.90	92.40	101.90	111.30	120.80	130.30
	KW	1.03	1.21	1.39	1.58	1.79	2.04	2.32	2.64
45 (7.22)	TCG	29.30	27.40	25.50	23.60	21.60	19.70	17.70	15.80
	SDT	65.10	74.40	83.80	93.20	102.60	112.10	121.50	130.90
	KW	1.03	1.20	1.38	1.56	1.77	2.00	2.28	2.60
50 (10.0)	TCG	32.70	30.50	28.40	26.30	24.20	22.00	19.90	17.70
	SDT	66.10	75.50	84.80	94.10	103.50	112.80	122.10	131.50
	KW	1.02	1.19	1.36	1.54	1.75	1.97	2.24	2.55
55 (12.78)	TCG	36.30	33.90	31.50	29.20	26.90	24.50	22.10	19.70
	SDT	67.30	76.60	85.80	95.10	104.30	113.60	122.90	132.10
	KW	1.02	1.19	1.35	1.53	1.72	1.95	2.21	2.51
60 (15.56)	TCG	40.10	37.50	34.90	32.30	29.70	27.10	24.50	21.90
	SDT	68.60	77.70	86.90	96.10	105.30	114.50	123.60	132.80
	KW	1.03	1.19	1.35	1.52	1.71	1.92	2.17	2.47
24ANB748A30 – HI**									
30 (−1.11)	TCG	42.60	40.50	38.40	36.10	33.60	31.10	28.40	25.50
	SDT	69.70	79.20	88.70	98.20	107.60	117.00	126.40	135.80
	KW	2.05	2.30	2.56	2.83	3.13	3.45	3.80	4.20
35 (1.67)	TCG	47.30	45.00	42.70	40.10	37.50	34.70	31.80	28.70
	SDT	71.20	80.60	90.10	99.40	108.80	118.20	127.50	136.80
	KW	2.09	2.34	2.60	2.87	3.17	3.49	3.85	4.25
40 (4.44)	TCG	52.40	49.90	47.30	44.60	41.70	38.70	35.50	32.20
	SDT	72.80	82.10	91.50	100.80	110.10	119.40	128.60	137.90
	KW	2.14	2.39	2.64	2.92	3.21	3.54	3.90	4.31
45 (7.22)	TCG	57.90	55.20	52.30	49.30	46.20	43.00	39.60	36.00
	SDT	74.50	83.70	92.90	102.20	111.40	120.60	129.80	139.00
	KW	2.19	2.43	2.69	2.96	3.26	3.59	3.96	4.37
50 (10.0)	TCG	63.90	60.80	57.70	54.50	51.10	47.60	43.90	40.10
	SDT	76.30	85.40	94.50	103.70	112.80	122.00	131.10	140.10
	KW	2.24	2.48	2.74	3.02	3.32	3.65	4.02	4.43
55 (12.78)	TCG	70.20	66.90	63.50	60.00	56.30	52.60	48.60	44.50
	SDT	78.10	87.10	96.20	105.30	114.40	123.40	132.40	141.30
	KW	2.30	2.54	2.80	3.07	3.37	3.71	4.08	4.49
60 (15.56)	TCG	77.00	73.40	69.70	65.90	62.00	57.90	53.60	49.20
	SDT	80.10	89.00	98.00	106.90	115.90	124.80	133.70	142.60
	KW	2.36	2.60	2.86	3.13	3.44	3.77	4.14	4.56
24ANB748A30 – LOW**									
30 (−1.11)	TCG	27.90	26.40	24.90	23.30	21.60	19.80	17.90	15.90
	SDT	64.80	74.50	84.20	93.80	103.50	113.10	122.70	132.30
	KW	1.41	1.65	1.91	2.18	2.48	2.84	3.25	3.73
35 (1.67)	TCG	31.40	29.80	28.10	26.30	24.50	22.50	20.40	18.20
	SDT	65.90	75.60	85.20	94.80	104.40	114.00	123.60	133.20
	KW	1.41	1.64	1.89	2.16	2.46	2.80	3.21	3.68
40 (4.44)	TCG	35.20	33.40	31.60	29.60	27.50	25.40	23.10	20.70
	SDT	67.20	76.80	86.30	95.90	105.40	115.00	124.50	134.00
	KW	1.40	1.64	1.88	2.14	2.43	2.77	3.17	3.64
45 (7.22)	TCG	39.40	37.40	35.30	33.10	30.90	28.50	26.10	23.50
	SDT	68.50	78.00	87.50	97.00	106.50	116.00	125.40	134.90
	KW	1.40	1.63	1.87	2.12	2.41	2.74	3.13	3.59
50 (10.0)	TCG	43.90	41.70	39.40	37.00	34.50	32.00	29.30	26.50
	SDT	70.00	79.30	88.80	98.20	107.60	117.00	126.40	135.70
	KW	1.41	1.63	1.86	2.11	2.39	2.71	3.09	3.54
55 (12.78)	TCG	48.70	46.30	43.80	41.20	38.50	35.70	32.80	29.70
	SDT	71.50	80.80	90.10	99.50	108.80	118.10	127.40	136.70
	KW	1.42	1.63	1.85	2.09	2.37	2.68	3.06	3.50
60 (15.56)	TCG	53.90	51.20	48.50	45.60	42.70	39.70	36.50	33.20
	SDT	73.10	82.30	91.50	100.80	110.00	119.20	128.50	137.70
	KW	1.43	1.64	1.85	2.08	2.35	2.66	3.02	3.45

See notes on page 39

CONDENSER ONLY RATINGS*

SST °F (°C)		CONDENSER ENTERING AIR TEMPERATURES °F (°C)							
		55 (12.78)	65 (18.33)	75 (23.89)	85 (29.44)	95 (35.0)	105 (40.56)	115 (46.11)	125 (51.67)
24ANB760A30 – HI**									
30 (–1.11)	TCG	51.80	49.30	46.70	44.00	41.10	38.10	34.90	31.60
	SDT	71.10	80.30	89.80	99.20	108.50	117.80	127.10	136.30
	KW	2.24	2.57	2.93	3.30	3.70	4.13	4.61	5.15
35 (1.67)	TCG	57.40	54.70	51.80	48.80	45.70	42.40	39.00	35.40
	SDT	72.70	82.00	91.20	100.50	109.80	119.00	128.20	137.40
	KW	2.30	2.64	2.99	3.36	3.76	4.20	4.69	5.23
40 (4.44)	TCG	63.50	60.50	57.30	54.10	50.70	47.10	43.40	39.50
	SDT	74.40	83.60	92.70	101.90	111.10	120.30	129.40	138.50
	KW	2.37	2.70	3.05	3.42	3.82	4.27	4.76	5.31
45 (7.22)	TCG	70.00	66.70	63.30	59.70	56.00	52.20	48.10	43.90
	SDT	76.20	85.30	94.30	103.50	112.50	121.60	130.60	139.70
	KW	2.44	2.77	3.12	3.49	3.89	4.34	4.84	5.39
50 (10.0)	TCG	77.00	73.40	69.70	65.80	61.80	57.60	53.20	48.70
	SDT	78.10	87.10	96.10	105.10	114.10	123.00	132.00	140.80
	KW	2.52	2.84	3.19	3.57	3.97	4.42	4.92	5.48
55 (12.78)	TCG	84.50	80.60	76.50	72.30	68.00	63.40	58.70	53.80
	SDT	80.10	89.00	97.90	106.80	115.70	124.50	133.30	142.00
	KW	2.60	2.93	3.27	3.65	4.06	4.51	5.01	5.56
60 (15.56)	TCG	92.60	88.30	83.90	79.30	74.60	69.70	64.60	59.20
	SDT	82.30	91.00	99.80	108.60	117.30	126.10	134.70	143.40
	KW	2.70	3.02	3.36	3.74	4.15	4.60	5.10	5.66
24ANB760A30 – LOW**									
30 (–1.11)	TCG	34.10	32.60	30.80	28.90	26.80	24.70	22.40	20.10
	SDT	65.50	75.10	84.80	94.40	103.90	113.50	123.00	132.60
	KW	1.64	1.94	2.25	2.58	2.96	3.39	3.89	4.47
35 (1.67)	TCG	38.20	36.50	34.50	32.40	30.20	27.80	25.30	22.80
	SDT	66.60	76.20	85.80	95.40	104.90	114.40	123.90	133.40
	KW	1.64	1.93	2.23	2.56	2.92	3.35	3.84	4.41
40 (4.44)	TCG	42.70	40.70	38.50	36.20	33.80	31.20	28.50	25.80
	SDT	67.90	77.50	87.00	96.50	105.90	115.40	124.80	134.20
	KW	1.63	1.92	2.22	2.53	2.89	3.31	3.79	4.35
45 (7.22)	TCG	47.50	45.30	42.90	40.40	37.70	34.90	32.00	29.00
	SDT	69.30	78.70	88.20	97.60	107.00	116.30	125.70	135.00
	KW	1.64	1.91	2.20	2.51	2.86	3.27	3.74	4.29
50 (10.0)	TCG	52.70	50.30	47.60	44.90	42.00	38.90	35.80	32.50
	SDT	70.80	80.10	89.50	98.80	108.10	117.40	126.70	136.00
	KW	1.64	1.91	2.19	2.50	2.84	3.23	3.69	4.24
55 (12.78)	TCG	58.30	55.60	52.70	49.70	46.50	43.30	39.80	36.30
	SDT	72.30	81.50	90.80	100.10	109.30	118.50	127.70	136.90
	KW	1.65	1.91	2.18	2.48	2.81	3.20	3.65	4.18
60 (15.56)	TCG	64.30	61.40	58.20	54.90	51.50	47.90	44.20	40.40
	SDT	73.90	83.10	92.30	101.40	110.60	119.70	128.80	137.90
	KW	1.67	1.92	2.18	2.47	2.79	3.17	3.61	4.13

* AHRI listing applies only to systems shown in Combination Ratings table.
KW – Outdoor Unit Kilowatts Only.
SDT – Saturated Temperature Leaving Compressor (°F)
SST – Saturated Temperature Entering Compressor (°F/°C)
TCG – Gross Cooling Capacity (1000 Btuh)

GUIDE SPECIFICATIONS
GENERAL

System Description

Outdoor-mounted, air-cooled, split-system air conditioner unit suitable for ground or rooftop installation. Unit consists of a hermetic compressor, an air-cooled coil, propeller-type condenser fan, and a control box. Unit will discharge supply air upward as shown on contract drawings. Unit will be used in a refrigeration circuit to match up to a packaged fan coil or coil unit.

Quality Assurance

— Unit will be rated in accordance with the latest edition of AHRI Standard 210.

— Unit will be certified for capacity and efficiency, and listed in the latest AHRI directory.

— Unit construction will comply with latest edition of ANSI/ ASHRAE and with NEC.

— Unit will be constructed in accordance with UL standards and will carry the UL label of approval. Unit will have c-UL approval.

— Unit cabinet will be capable of withstanding Federal Test Method Standard No. 141 (Method 6061) 500-hr salt spray test.

— Air-cooled condenser coils will be leak tested and pressure tested.

— Unit constructed in ISO9001 approved facility.

Delivery, Storage, and Handling

— Unit will be shipped as single package only and is stored and handled per unit manufacturer's recommendations.

Warranty (for inclusion by specifying engineer)

— U.S. and Canada only.

PRODUCTS

Equipment

— Factory assembled, single piece, air-cooled air conditioner unit. Contained within the unit enclosure is all factory wiring, piping, controls, compressor, refrigerant charge Puron® (R-410A), and special features required prior to field start-up.

Unit Cabinet

— Unit cabinet, including louvered coil guard, will be constructed of galvanized steel, bonderized, and coated with a powder coat paint.

Fans

— Condenser fan will be direct-drive propeller type, discharging air upward.

— Condenser fan motors will be totally enclosed, 1-phase type with class B insulation and permanently lubricated bearings. Shafts will be corrosion resistant.

— Fan blades will be statically and dynamically balanced.

— Condenser fan openings will be equipped with coated steel wire safety guards.

Compressor

— Compressor will be hermetically sealed.

— Compressor will be mounted on rubber vibration isolators.

Condenser Coil

— Condenser coil will be air cooled.

— Coil will be constructed of aluminum fins mechanically bonded to copper tubes which are then cleaned, dehydrated, and sealed.

Refrigeration Components

— Refrigeration circuit components will include liquid-line shutoff valve with sweat connections, vapor-line shutoff valve with sweat connections, system charge of Puron® (R-410A) refrigerant, and compressor oil.

— Unit will be equipped with high-pressure switch, low pressure switch and filter drier for Puron refrigerant.

Operating Characteristics

— The capacity of the unit will meet or exceed _____ Btuh at a suction temperature of _____ °F/°C. The power consumption at full load will not exceed _____ kW.

— Combination of the unit and the evaporator or fan coil unit will have a total net cooling capacity of _____ Btuh or greater at conditions of _____ CFM entering air temperature at the evaporator at _____ °F/°C wet bulb and _____ °F/°C dry bulb, and air entering the unit at _____ °F/°C.

— The system will have a SEER of _____ Btuh/watt or greater at DOE conditions.

Electrical Requirements

— Nominal unit electrical characteristics will be _____ v, single phase, 60 hz. The unit will be capable of satisfactory operation within voltage limits of _____ v to _____ v.

— Unit electrical power will be single point connection.

— Control circuit will be 24v.

Special Features

— Refer to section of this literature identifying accessories and descriptions for specific features and available enhancements.

SYSTEM DESIGN SUMMARY

1. Intended for outdoor installation with free air inlet and outlet. Outdoor fan external static pressure available is less than 0.01-in. w.c.
2. This product is qualified for low ambient cooling operation (below 55°F/12.8°C) when used with an Infinity User Interface ONLY.
3. The maximum outdoor operating ambient in cooling mode is 125°F (51.67°C).
4. For reliable operation, unit should be level in all horizontal planes.
5. For interconnecting refrigerant tube lengths greater than 80 ft (23.4 m) and/or 35 ft (10.7 m) vertical differential, consult Residential Piping and Longline Guideline and Service Manual available from equipment distributor.
6. If any refrigerant tubing is buried, provide a 6 in. (152.4 mm) vertical rise to the valve connections at the unit. Refrigerant tubing lengths up to 36 in. (914.4 mm) may be buried without further consideration. Do not bury refrigerant lines longer than 36 in. (914.4 mm).
7. Use only copper wire for electric connection at unit. Aluminum and clad aluminum are not acceptable for the type of connector provided.
8. Do not apply capillary tube indoor coils to these units.
9. Factory-supplied filter drier must be installed.

Copyright 2011 Carrier Corp. • 7310 W. Morris St. • Indianapolis, IN 46231 Printed in U.S.A. Edition Date: 06/11

Catalog No. 24ANB7–2PD

Manufacturer reserves the right to change, at any time, specifications and designs without notice and without obligations.

Replaces: 24ANB7–1PD