24ANB7**C
Infinity® 2–Stage Air Conditioner with Puron® Refrigerant for Coastal Applications 2 to 5 Nominal Tons

Carrier
turn to the experts™

Product Data

WeatherShield™ INFINITY® SERIES

Carrier's Air Conditioners with Puron® refrigerant provide a collection of features unmatched by any other family of equipment. The 24ANB7 has been designed utilizing Carrier's Puron refrigerant. The environmentally sound refrigerant allows you to make a responsible decision in the protection of the earth's ozone layer.

This product has been designed and manufactured to meet Energy Star® criteria for energy efficiency when matched with appropriate coil components. Refer to the combination ratings in the Product Data for system combinations that meet Energy Star® guidelines.

NOTE: **Ratings contained in this document are subject to change at any time. Always refer to the AHRI directory (www.ahridirectory.org) for the most up-to-date ratings information.**

INDUSTRY LEADING FEATURES / BENEFITS

Efficiency
- 14 - 17.7 SEER / 11.3 - 13.7 EER
- Microtube Technology™ refrigeration system

Sound
- Sound level as low as 67 dBA
- Quiet mount split post compressor grommets
- Forward-swept condenser fan blade
- Compressor sound hood
- Laminated steel compressor mounting plate
- 8 pole PSC ball bearing outdoor condenser fan motor

Comfort
- System supports Infinity™ Control or standard 2-stage thermostat controls

Reliability
- Puron® refrigerant - environmentally sound, won't deplete the ozone layer and low lifetime service cost.
- Front-seating service valves
- 2-stage scroll compressor
- Internal pressure relief valve
- Internal thermal overload
- Low pressure switch
- High pressure switch
- Filter drier
- Balanced refrigeration system for maximum reliability

Controls and Diagnostics
- Infinity™ Control or 2-Stage Thermostat
- 2 control wires to outdoor unit with Infinity Control (serial numbers 0213E and newer)
- Utility Interface Connection
- Enhanced diagnostics capability with Infinity™ Control

Durability
WeatherArmor Ultra™ protection package:
- Solid, Durable sheet metal construction
- Steel louver coil guard
- 2-Sided, baked-on, complete coverage, powder paint
- Industry leading standard coastal warranty coverage

ArmorPlate™ Condenser Coil
- Aluminum fin material is pre-coated on both sides with a corrosion protective epoxy phenolic thermoset coating.
- Industry leading standard coastal warranty coverage

Applications
- Long-line - up to 250 feet (76.2 m) total equivalent length.
- Low ambient cooling (down to 0°F / -17.8°C) with approved low ambient accessory kits or complete Infinity system.

MODEL NUMBER NOMENCLATURE

1	2	3	4	5	6	7	8	9	10	11	12	13
N	N	A	A	A/N	N	N	N	A/N	A/N	A/N	N	N
2	4	A	N	B	7	3	6	C	0	0	3	0
Product Series 24=AC		Product Family A=RES AC	Tier N = Infinity	Major Series B=Puron	SEER 7=17 SEER Nominal		Cooling Capacity	Variations C=Coastal	Open 0=Not Defined	Open 0=Not Defined	Voltage 3=208–230–1	Minor Series 0, 1, 2...

Puron™ the environmentally sound refrigerant

AHRI CERTIFIED™ www.ahridirectory.org

Use of the AHRI Certified TM Mark indicates a manufacturer's participation in the program For verification of certification for individual products, go to www.ahridirectory.org.

Certified System™

ISO 9001
QMI-SAI Global

c UL US

ENERGY STAR

This product has been designed and manufactured to meet Energy Star® criteria for energy efficiency when matched with appropriate coil components. However, proper refrigerant charge and proper air flow are critical to achieve rated capacity and efficiency. Installation of this product should follow all manufacturing refrigerant charging and air flow instructions. **Failure to confirm proper charge and air flow may reduce energy efficiency and shorten equipment life.**

IdealHumidity™

WeatherShield™

STANDARD FEATURES

FEATURES	Unit Size – Voltage, Series			
	24–31	36–31	48–31	60–31
Puron Refrigerant	X	X	X	X
Maximum SEER Rating*	17.0	17.7	17.0	16.5
Inner and Outer Sheet Metal Surfaces Coated with Baked on Powder Paint	X	X	X	X
2 control wires to outdoor unit with Infinity Control (serial numbers 0213E and newer)	X	X	X	X
2–Stage Scroll Compressor	X	X	X	X
Crankcase Heater	O	O	X	X
Long line Capability	X	X	X	X
Low Ambient Cooling Capability to 0°F (–17.8°C) w/Infinity Control or Approved Kits	X	X	X	X
Enhanced Diagnostics w/Infinity Control	X	X	X	X
Utility Interface Connection	X	X	X	X
Louvered Coil Guard	X	X	X	X
Field Installed Filter Drier	X	X	X	X
Front Seating Service Valves	X	X	X	X
Internal Pressure Relief Valve	X	X	X	X
Internal Thermal Overload	X	X	X	X
Long Line capability	X	X	X	X
Low Pressure Switch	X	X	X	X
High Pressure Switch	X	X	X	X
Sound Blanket	X	X	X	X

X = Standard O = Accessory
* With approved combinations

REFRIGERANT PIPING LENGTH LIMITATIONS

Liquid Line Sizing and Maximum Total Equivalent Lengths† for Cooling Only Systems with Puron® Refrigerant:

The maximum allowable length of a residential split system depends on the liquid line diameter and vertical separation between indoor and outdoor units.

See Table below for liquid line sizing and maximum lengths :

Maximum Total Equivalent Length
Outdoor Unit BELOW Indoor Unit

Size	Liquid Line Connection	Liquid Line Diam. w/TXV	AC with Puron Refrigerant Maximum Total Equivalent Length†: Outdoor unit BELOW Indoor Vertical Separation ft (m)								
			0–5 (0–1.5)	6–10 (1.8–3.0)	11–20 (3.4–6.1)	21–30 (6.4–9.1)	31–40 (9.4–12.2)	41–50 (12.5–15.2)	51–60 (15.5–18.3)	61–70 (18.6–21.3)	71–80 (21.6–24.4)
024 AC with Puron	3/8	1/4	75	75	75	50	50	– –	– –	– –	– –
		5/16	250*	250*	250*	250*	250*	225*	175	125	100
		3/8	250*	250*	250*	250*	250*	250*	250*	250*	250*
036 AC with Puron	3/8	5/16	175	150	150	100	100	100	75	– –	– –
		3/8	250*	250*	250*	250*	250*	250*	250*	250*	250*
048 AC with Puron	3/8	3/8	250*	250*	250*	250*	250*	250*	230	160	– –
060 AC with Puron	3/8	3/8	250*	250*	250*	225*	190	150	110	– –	– –

*** Maximum actual length not to exceed 200 ft (61 m)**

† Total equivalent length accounts for losses due to elbows or fitting. See the Long Line Guideline for details.

– – = outside acceptable range

Maximum Total Equivalent Length
Outdoor Unit ABOVE Indoor Unit

Size	Liquid Line Connection	Liquid Line Diam. w/TXV	AC with Puron Refrigerant Maximum Total Equivalent Length†: Outdoor unit ABOVE Indoor Vertical Separation ft (m)							
			25 (7.6)	26–50 (7.9–15.2)	51–75 (15.5–22.9)	76–100 (23.2–30.5)	101–125 (30.8–38.1)	126–150 (38.4–45.7)	151–175 (46.0–53.3)	176–200 (53.6–61.0)
024 AC with Puron	3/8	1/4	100	125	175	200	225*	250*	250*	250*
		5/16	250*	250*	250*	250*	250*	250*	250*	250*
		3/8	250*	250*	250*	250*	250*	250*	250*	250*
036 AC with Puron	3/8	5/16	225*	250*	250*	250*	250*	250*	250*	250*
		3/8	250*	250*	250*	250*	250*	250*	250*	250*
048 AC with Puron	3/8	3/8	250*	250*	250*	250*	250*	250*	250*	250*
060 AC with Puron	3/8	3/8	250*	250*	250*	250*	250*	250*	250*	250*

*** Maximum actual length not to exceed 200 ft (61 m)**

† Total equivalent length accounts for losses due to elbows or fitting. See the Long Line Guideline for details.

REFRIGERANT CHARGE ADJUSTMENTS

Liquid Line Size	Puron Charge oz/ft (g/m)
3/8	0.60 (17.74) (Factory charge for lineset = 9 oz / 266.16 g)
5/16	0.40 (11.83)
1/4	0.27 (7.98)

Units are factory charged for 15 ft (4.6 m) of 3/8” liquid line. The factory charge for 3/8” lineset 9 oz.(266.16 g). When using other length or diameter liquid lines, charge adjustments are required per the chart above.

Charging Formula:

[(Lineset oz/ft x total length) – (factory charge for lineset)] = charge adjustment

Example 1: System has 15 ft of line set using existing 1/4“ liquid line. What charge adjustment is required?

Formula: (.27 oz/ft x 15ft) – (9 oz) = (-4.95) oz.

Net result is to remove 4.95 oz of refrigerant from the system

Example 2: System has 45 ft of existing 5/16” liquid line. What is the charge adjustment?

Formula: (.40 oz/ft. x 45ft) – (9 oz.) = 9 oz.

Net result is to add 9 oz of refrigerant to the system

LONG LINE APPLICATIONS

An application is considered Long Line, when the refrigerant level in the system requires the use of accessories to maintain acceptable refrigerant management for systems reliability. See Accessory Usage Guideline table for required accessories. Defining a system as long line depends on the liquid line diameter, actual length of the tubing, and vertical separation between the indoor and outdoor units.

For Air Conditioner systems, the chart below shows when an application is considered Long Line.

AC WITH PURON® REFRIGERANT LONG LINE DESCRIPTION ft (m)
Beyond these lengths, long line accessories are required

Liquid Line Size	Units On Same Level	Outdoor Below Indoor	Outdoor Above Indoor
1/4	No accessories needed within allowed lengths	No accessories needed within allowed lengths	175 (53.3)
5/16	120 (36.6)	50 (15.2) vertical or 120 (36.6) total	120 (36.6)
3/8	80 (24.4)	35 (10.7) vertical or 80 24.4) total	80 (24.4)

Note: See Long Line Guideline for details

VAPOR LINE SIZING AND COOLING CAPACITY LOSS

Acceptable vapor line diameters provide adequate oil return to the compressor while avoiding excessive capacity loss. The suction line diameters shown in the chart below are acceptable for AC systems with Puron refrigerant:

Vapor Line Sizing and Cooling Capacity Losses — Puron® Refrigerant 2-Stage Air Conditioner Applications

Unit Nominal Size (Btuh)	Maximum Liquid Line Diameters (In. OD)	Vapor Line Diameters (In.) OD	Cooling Capacity Loss (%) Total Equivalent Line Length ft. (m)								
			26–50 (7.9–15.2)	51–80 (15.5–24.4)	81–100 (24.7–30.5)	101–125 (30.8–38.1)	126–150 (38.4–45.7)	151–175 (46.0–50.3)	176–200 (53.6–60.0)	201–225 (61.3–68.6)	226–250 (68.9–76.2)
024 2–Stage Puron AC	3/8	5/8	0	1	1	2	3	3	4	4	5
		3/4	0	0	0	0	1	1	1	1	1
036 2–Stage Puron AC	3/8	5/8	1	2	4	5	6	7	9	10	11
		3/4	0	0	1	1	2	2	3	3	4
		7/8	0	0	0	0	1	1	1	1	2
048 2–Stage Puron AC	3/8	3/4	1	2	2	3	4	5	6	7	7
		7/8	0	1	1	2	2	2	3	3	3
		1–1/8	0	0	—	—	—	—	—	—	—
060 2–Stage Puron AC	3/8	3/4	1	2	4	5	6	7	9	10	11
		7/8	0	1	2	2	3	4	4	5	5
		1–1/8	0	0	0	1	1	1	1	1	1

Applications in this area may be long line and may have height restrictions. See the *Residential Piping and Long Line Guideline*.
— Applications in this area are not recommended due to insufficient oil return

PHYSICAL DATA

UNIT SIZE – VOLTAGE, SERIES	24–31	36–31	48–31	60–31
Operating Weight lb (kg)	203 (92.1)	236 (107.0)	310 (140.6)	311 (141.1)
Shipping Weight lb (kg)	242 (109.8)	275 (124.7)	352 (159.7)	353 (160.1)
Compressor Type	Ultratech 2–Stage Scroll			
REFRIGERANT	Puron® (R–410A)			
Control	TXV (Puron Hard Shutoff)			
Charge lb (kg)	6.64 (3.01)	9.26 (4.20)	12.94 (5.87)	12.70 (5.76)
COND FAN	Forward Swept Propeller Type, Direct Drive			
Air Discharge	Vertical			
Air Qty (CFM)	2481	3068	4700	4700
Motor HP	1/12	1/10	1/4	1/4
Motor RPM	800	825	825	825
COND COIL				
Face Area (Sq ft)	19.38	19.38	25.12	25.12
Fins per In.	25	20	20	20
Rows	1	2	2	2
Circuits	5	7	7	7
VALVE CONNECT. (In. ID)				
Vapor	3/4	7/8	7/8	7/8
Liquid	3/8			
REFRIGERANT TUBES (In. OD)				
Rated Vapor*	3/4	7/8	1–1/8	1–1/8
Liquid	3/8			

*Units are rated with 25 ft (7.6 m) of lineset length. See *Vapor Line Sizing and Cooling Capacity Loss* table when using other sizes and lengths of lineset.

ELECTRICAL DATA

Unit Size – Voltage, Series	V/PH	OPER VOLTS*		COMPR		FAN	MCA	MIN WIRE SIZE†	MIN WIRE SIZE†	MAX LENGTH ft. (m)‡	MAX LENGTH ft. (m)‡	MAX FUSE** or CKT BRK AMPS
		MIN	MAX	LRA	RLA	FLA		60° C	75° C	60° C	75° C	
24–31	208–230–1	197	253	58.3	11.1	0.6	14.5	14	14	54 (16.6)	52 (15.7)	20
36–31				83.0	15.3	0.7	19.8	12	12	63 (19.2)	60 (18.3)	35
48–31				104.0	21.2	1.3	27.8	10	10	72 (21.9)	68 (20.8)	40
60–31				152.9	28.8	1.3	37.3	8	8	83 (25.4)	79 (24.2)	60

* Permissible limits of the voltage range at which the unit will operate satisfactorily

† If wire is applied at ambient greater than 30°C, consult table 310–16 of the NEC (NFPA 70). The ampacity of non–metallic–sheathed cable (NM), trade name ROMEX, shall be that of 60°C conditions, per the NEC (NFPA 70) Article 336–26. If other than uncoated (no–plated), 60 or 75°C insulation, copper wire (solid wire for 10 AWG or smaller, stranded wire for larger than 10 AWG) is used, consult applicable tables of the NEC (NFPA 70).

‡ Length shown is as measured one way along wire path between unit and service panel for voltage drop not to exceed 2%.

** Time–Delay fuse.

FLA – Full Load Amps
LRA – Locked Rotor Amps
MCA – Minimum Circuit Amps
RLA – Rated Load Amps

NOTE: Control circuit is 24–V on all units and requires external power source. Copper wire must be used from service disconnect to unit. All motors/compressors contain internal overload protection.

Complies with 2010 requirements of ASHRAE Standards 90.1

A-WEIGHTED SOUND POWER (dBA)

Unit Size – Voltage, Series	Standard Rating (dBA)	Typical Octave Band Spectrum (dBA, without tone adjustment)						
		125	250	500	1000	2000	4000	8000
24–31	71 – High Stage	51.0	55.5	61.5	66.0	59.0	54.5	51.0
	69 – Low Stage	49.5	55.5	61.0	64.0	59.5	54.5	49.0
36–31	69 – High Stage	58.5	57.5	61.5	63.5	57.5	53.5	50.5
	67 – Low Stage	57.0	58.0	62.0	61.5	57.5	53.5	49.0
48–31	70 – High Stage	55.0	62.0	63.5	65.0	59.0	55.5	48.5
	69 – Low Stage	54.5	61.5	63.5	63.5	59.0	56.0	49.5
60–31	72 – High Stage	52.0	63.5	65.5	66.0	60.0	58.5	52.5
	71 – Low Stage	53.5	63.5	65.5	65.0	60.5	58.5	54.5

NOTE: Tested in accordance with AHRI Standard 270–08. (Not listed with AHRI).

CHARGING SUBCOOLING (TXV-TYPE EXPANSION DEVICE)

UNIT SIZE–VOLTAGE, SERIES	REQUIRED SUBCOOLING °F (°C)
24–31	10 (5.6)
36–31	14 (7.8)
48–31	13 (7.2)
60–31	14 (7.8)

ACCESSORY CONTROLS

PART NUMBER	DESCRIPTION
SYSTXCCITN01	Infinity Touch Control (non–Wi–Fi)
SYSTXCCITW01	Infinity Touch Control with Wi–Fi & Wireless Access Point
SYSTXCCUID01–V	Infinity Control Deluxe 7–Day Programmable (4–Wire User Interface w/ multiple functionality)
SYSTXCCUIZ01–V	Infinity Control Deluxe Zoning 7–Day Programmable (Wall–mounted control for a multi–zone system. w/ multiple functionality)
SYSTXCCUID01–B	Infinity Control Deluxe 7–Day Programmable (Wall–mounted system control.)
SYSTXCCUIZ01–B	Infinity Control Deluxe Zoning 7–Day Programmable (Wall–mounted control for a multi–zone system.)
SYSTXCC4ZC01	Infinity 4–Zone Damper Control Module (Wall–mounted control for a four–zone system.)
SYSTXCCSMS01	Infinity Smart Sensor (Optional wall control used to monitor temperature and/or fan control in an individual zone.)
SYSTXCCRRS01	Infinity Remote Room Sensor (Monitors temperature in an individual zone.)
SYSTXCCRCT01 or SYSTXCCRWF01	Infinity System Remote Access Module (Hardware for wireless access and control via internet.)
SYSTXCCNIM01	Infinity Network Interface Module (Connects Heat Recovery and Energy Recovery Ventilators on non–zoning applications.)

ACCESSORIES

ORDER NUMBER	DESCRIPTION	24–31	36–31	48–31	60–31
KAACH2401AAA	CRANKCASE HEATER	X	X	S	S
KSAHS2501AAA*	HARD START KIT	X	X		
KSAHS2801AAA*	HARD START KIT			X	X
KAALS0201LLS	SOLENOID VALVE	X	X	X	X
KSALA0301410	LOW AMBIENT PSW	X	X	X	X
KAAFT0101AAA	FREEZE THERMOSTAT	X	X	X	X
KAAWS0101AAA	WINTER START CONTROL	X	X	X	X
KSASF0101AAA	SUPPORT FEET	X	X	X	X

x = Accessory S = Standard

* Not backward compatible to previous series.

ACCESSORY USAGE GUIDELINE

Accessory	Required for Low Ambient Cooling Applications Utilizing 2–Stage Thermostat on 17 SEER Models Only (Below 55° F / 12.8° C)	Required for Low Ambient Cooling Applications Utilizing UI (Below 55° F / 12.8° C)	Required for Long Line Applications*	Required for Sea Coast Applications (within 2 miles/3.2 km)
Compressor Start Assist Capacitor and Relay	No	No	No	No
Crankcase Heater	Yes (standard on some units)	Yes (standard on some units)	Yes (standard on some units)	No
Evaporator Freeze Thermostat	Yes (kit required)	Standard with Infinity Control (no kit required)	No	No
Liquid Line Solenoid Valve	No	No	See Residential Piping and Long Line Guideline	No
Low–Ambient Pressure Switch	Yes (kit required)	Standard with Infinity Control (no kit required)	No	No
Puron Refrigerant Balance Port Hard Shutoff TXV	Yes (standard w/factory approved indoor unit)	Yes (standard w/factory approved indoor unit)	Yes (standard w/factory approved indoor unit)	Yes (standard w/factory approved indoor unit)
Support Feet	Recommended	Recommended	No	Recommended
Winter Start Control	Yes (kit required)	Standard with Infinity Control (no kit required)	No	No

* For tubing set lengths between 80 and 200 ft. (24.38 and 60.96 m) horizontal or 35 ft. (10.7 m) vertical differential (total equivalent length), refer to the Residential Piping and Long Line Guideline.

Accessory Description and Usage (Listed Alphabetically)

1. Compressor Start Assist - Capacitor and Relay

Start capacitor and relay gives a ”hard” boost to compressor motor at each start up.

Usage Guideline:

Not required on this unit since compressor always starts unloaded.

Available if required by local codes.

2. Crankcase Heater

An electric resistance heater which mounts to the base of the compressor to keep the lubricant warm during off cycles. Improves compressor lubrication on restart and minimizes the chance of liquid slugging.

Usage Guideline:

Required in low ambient cooling applications.

Required in long line applications.

Suggested in all commercial applications.

3. Evaporator Freeze Thermostat

An SPST temperature-actuated switch that stops unit operation when evaporator reaches freeze-up conditions.

Usage Guideline:

Required when low ambient kit has been added.

4. Low-Ambient Pressure Switch

A long life pressure switch which is mounted to outdoor unit service valve. It is designed to cycle the outdoor fan motor in order to maintain head pressure within normal operating limits. The control will maintain working head pressure at low-ambient temperatures down to 0°F (-17.8°C) when properly installed.

Usage Guideline:

A Low-Ambient Pressure Switch must be used when cooling operation is used at outdoor temperatures below 55°F (12.8°C).

5. Support Feet

Four stick-on plastic feet that raise the unit 4 in. (101.6 mm) above the mounting pad. This allows sand, dirt, and other debris to be flushed from the unit base, minimizing corrosion.

Usage Guideline:

Suggested in the following applications:

Coastal installations.

Windy areas or where debris is normally circulating.

Rooftop installations.

For improved sound ratings.

6. Thermostatic Expansion Valve (TXV)

A modulating flow-control valve which meters refrigerant liquid flow rate into the evaporator in response to the superheat of the refrigerant gas leaving the evaporator.

Kit includes valve, adapter tubes, and external equalizer tube. Hard shut off types are available.

NOTE: When using a hard shut off TXV with single phase reciprocating compressors, a Compressor Start Assist Capacitor and Relay is required.

Usage Guideline:

Required to achieve AHRI ratings in certain equipment combinations. Refer to combination ratings.

Hard shut off TXV or LLS required in air conditioner long line applications.

7. Winter Start Control

This control is designed to alleviate nuisance opening of the low-pressure switch by bypassing it for the first 3 minutes of operation.

DIMENSIONS - ENGLISH

UNIT	SERIES	ELECTRICAL CHARACTERISTICS				A	B	C	D	E	F	G	K	L	M	N	P	OPERATING WEIGHT (lbs)	SHIPPING WEIGHT (lbs)	SHIPPING DIMENSIONS (L x W x H)
24ANB724C	1	X	O	O	O	31 3/16"	36 3/8"	3 3/4"	3/4"	6 9/16"	24 11/16"	9 1/8"	2 13/16"	1/2"	15 7/8"	16 1/2"	17 3/4"	203	242	33 5/16" X 33 5/16" X 42 3/4"
24ANB736C	1	X	O	O	O	31 3/16"	36 3/8"	3 7/8"	7/8"	6 9/16"	24 11/16"	9 1/8"	2 15/16"	5/8"	16"	15 1/2"	17 1/2"	236	275	33 5/16" X 33 5/16" X 42 3/4"
24ANB748C	1	X	O	O	O	35"	40 5/8"	3 7/8"	7/8"	6 9/16"	28 7/16"	9 1/8"	2 15/16"	5/8"	17 1/4"	17 1/4"	18 1/2"	310	352	37 1/8" X 37 1/8" X 46 1/8"
24ANB760C	1	X	O	O	O	35"	40 5/8"	3 7/8"	7/8"	6 9/16"	28 7/16"	9 1/8"	2 15/16"	5/8"	16 1/2"	16 1/4"	17 1/2"	311	353	37 1/8" X 37 1/8" X 46 1/8"
		208-230-1-60	230-1-60	208/230-3-60	460-3-60															

X = YES
O = NO

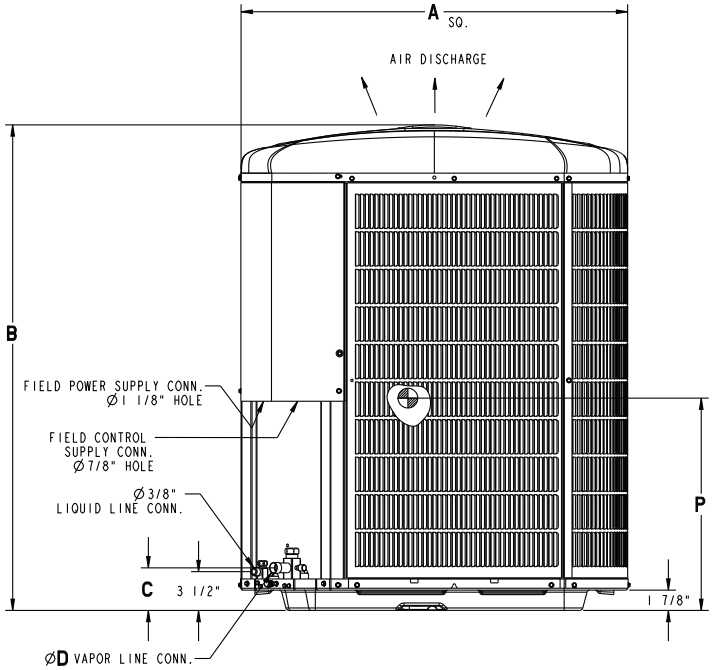

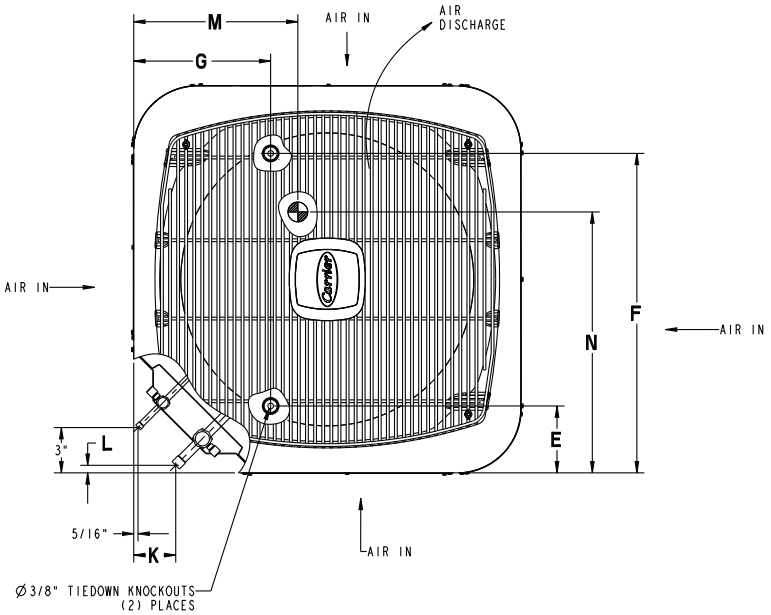

UNIT SIZE	MINIMUM MOUNTING PAD DIMENSIONS
24,36	31 1/2" X 31 1/2"
48,60	35" X 35"

DIMENSIONS - SI

UNIT	SERIES	ELECTRICAL CHARACTERISTICS				A	B	C	D	E	F	G	K	L	M	N	P	OPERATING WEIGHT (Kgs)	SHIPPING WEIGHT (Kgs)	SHIPPING DIMENSIONS (L x W x H)
24ANB724C	1	X	O	O	O	792.5	923.9	95.6	19.1	166.1	626.3	231.3	70.9	12.8	403.2	419.1	450.9	92.1	109.8	846.4 X 846.4 X 1085.8
24ANB736C	1	X	O	O	O	792.5	923.9	97.9	22.2	166.1	626.3	231.3	74.5	16.3	406.4	393.7	444.5	107.0	124.7	846.4 X 846.4 X 1085.8
24ANB748C	1	X	O	O	O	889.0	1032.5	97.9	22.2	166.1	722.8	231.3	74.5	16.3	438.2	438.2	469.9	140.6	159.7	942.9 X 942.9 X 1172.2
24ANB760C	1	X	O	O	O	889.0	1032.5	97.9	22.2	166.1	722.8	231.3	74.5	16.3	419.1	412.8	444.5	141.1	160.1	942.9 X 942.9 X 1172.2
		208-230-1-60	230-1-60	208/230-3-60	460-3-60															

X = YES
O = NO

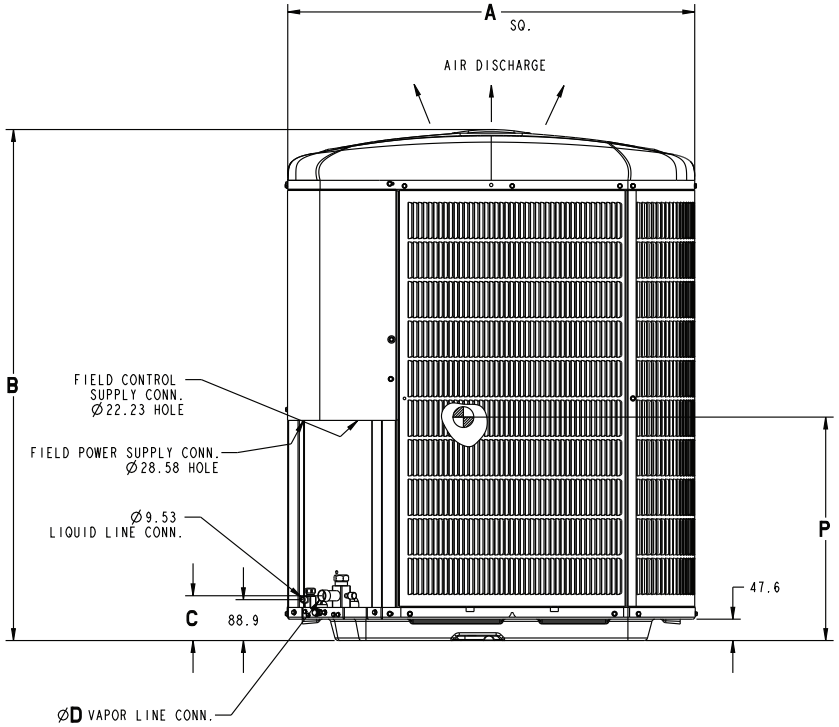

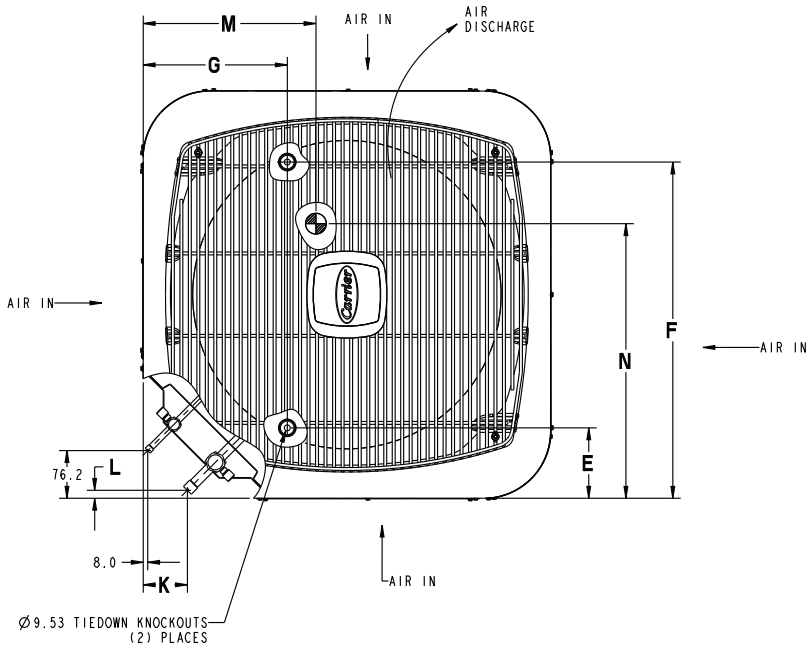

UNIT SIZE	MINIMUM MOUNTING PAD DIMENSIONS
24,36	800.1 X 800.1
48,60	889.0 X 889.0

CLEARANCES

Clearances (various examples)

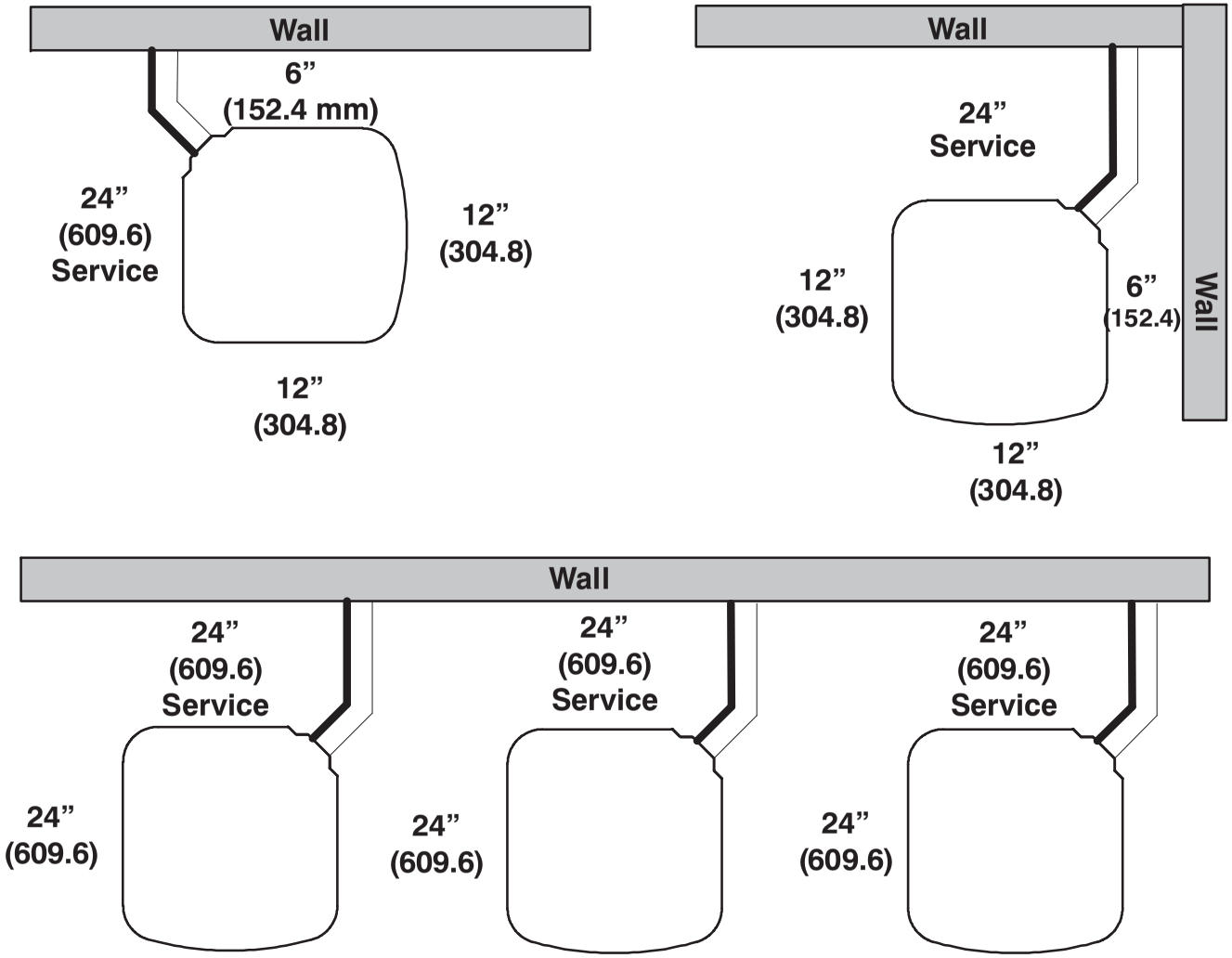

Note: Numbers in ( ) = mm

IMPORTANT: When installing multiple units in an alcove, roof well, or partially enclosed area, ensure there is adequate ventilation to prevent re-circulation of discharge air.

A07833

TESTED AHRI COMBINATION RATINGS

NOTE: Ratings contained in this document are subject to change at any time.

For AHRI ratings certificates, please refer to the AHRI directory www.ahridirectory.org

Additional ratings and system combinations can be accessed via the Carrier database at: www.MyCarrierRatings.com

For performance data at specific application &/or design conditions with various indoor unit combinations, the equipment performance calculator can be accessed at : http://rpmob.wrightsoft.com/

Model Number	Indoor Coil Model Number	AHRI STANDARD RATINGS						FURNACE MODEL
		COOLING						
		CAPACITY		SEER	EER	ID CFM		
		HIGH	LOW			HIGH	LOW	
24ANB7C24A**31	CNPV*3117A**	24,000	21,600	17.0	13.0	835	670	58CV(A,X)090–16
24ANB7C36A**31	CNPV*4821A**	36,000	29,400	17.0	13.0	1005	835	58CV(A,X)090–16
24ANB7C48A**31	CNPV*6124A**	48,000	40,000	17.0	13.0	1355	1010	58CV(A,X)135–22
24ANB7C60A**31	CNPV*6124A**	58,000	47,000	16.5	13.0	1685	1355	58CV(A,X)135–22

AHRI — Air Conditioning, Heating & Refrigeration Institute
EER — Energy Efficiency Ratio – 80°F (26.6°C) indoor db/67°F (19.4°C) indoor wb & 95°F (35°C) outdoor wb.
SEER — Seasonal Energy Efficiency Ratio
TDR — Time–Delay Relay. In most cases, only 1 method should be used to achieve TDR function. Using more than 1 method in a system may cause degradation in performance. Use either the accessory Time–Delay Relay KAATD0101TDR or a furnace equipped with TDR. Most Carrier furnaces are equipped with TDR.

NOTES:
1. Ratings are net values reflecting the effects of circulating fan motor heat. Supplemental electric heat is not included.
2. Tested outdoor/indoor combinations have been tested in accordance with DOE test procedures for central air conditioners. Ratings for other combinations are determined under DOE computer simulation procedures.
3. Determine actual CFM values obtainable for your system by referring to fan performance data in fan coil or furnace coil literature.
4. Do not apply with capillary tube coils as performance and reliability are affected.

DETAILED COOLING CAPACITIES#

EVAPORATOR AIR		CONDENSER ENTERING AIR TEMPERATURES °F (°C)																	
		75 (23.9)			85 (29.4)			95 (35)			105 (40.6)			115 (46.1)			125 (51.7)		
CFM	EWB °F (°C)	Capacity MBtuh		Total Sys. KW**	Capacity MBtuh		Total Sys. KW**	Capacity MBtuh		Total Sys. KW**	Capacity MBtuh		Total Sys. KW**	Capacity MBtuh		Total Sys. KW**	Capacity MBtuh		Total Sys. KW**
		Total	Sens‡		Total	Sens‡		Total	Sens‡		Total	Sens‡		Total	Sens‡		Total	Sens‡	
24ANB724C**31 Outdoor Section With CNPV*3117A**+58CV(A,X)090–16 Indoor Section – High																			
600	57 (13.9)	24.35	24.35	1.59	21.95	21.95	1.68	19.59	19.59	1.78	17.29	17.29	1.90	15.06	15.06	2.03	12.92	12.92	2.18
	62 (16.7)	25.97	21.39	1.60	23.22	19.39	1.69	20.53	17.42	1.79	17.94	15.51	1.90	15.45	13.65	2.03	13.09	11.86	2.18
	63 (17.2)††	26.50	17.74	1.60	23.69	16.00	1.69	20.94	14.30	1.79	18.29	12.65	1.91	15.74	11.06	2.03	13.32	9.54	2.18
	67 (19.4)	28.68	18.42	1.61	25.64	16.63	1.71	22.68	14.88	1.80	19.82	13.18	1.92	17.07	11.54	2.04	14.47	9.98	2.19
	72 (22.2)	31.66	15.36	1.63	28.31	13.79	1.72	25.04	12.27	1.82	21.89	10.80	1.93	18.87	9.39	2.06	16.01	8.05	2.21
650	57 (13.9)	25.14	25.14	1.60	22.64	22.64	1.69	20.19	20.19	1.80	17.81	17.81	1.91	15.50	15.50	2.04	13.29	13.29	2.18
	62 (16.7)	26.46	22.38	1.61	23.65	20.29	1.70	20.90	18.25	1.80	18.25	16.26	1.91	15.71	14.32	2.04	13.33	13.26	2.19
	63 (17.2)††	26.98	18.42	1.61	24.11	16.62	1.70	21.29	14.87	1.80	18.57	13.16	1.92	15.98	11.52	2.04	13.51	9.95	2.19
	67 (19.4)	29.19	19.14	1.63	26.08	17.29	1.72	23.05	15.48	1.81	20.12	13.72	1.93	17.32	12.03	2.05	14.66	10.41	2.20
	72 (22.2)	32.19	15.83	1.64	28.75	14.22	1.73	25.41	12.65	1.83	22.20	11.14	1.94	19.12	9.70	2.07	16.20	8.32	2.21
700	57 (13.9)	25.85	25.85	1.61	23.27	23.27	1.71	20.74	20.74	1.81	18.28	18.28	1.92	15.90	15.90	2.05	13.62	13.62	2.19
	62 (16.7)	26.90	23.34	1.62	24.03	21.18	1.71	21.23	19.06	1.81	18.53	16.98	1.92	15.97	15.81	2.05	13.65	13.65	2.20
	63 (17.2)††	27.40	19.08	1.62	24.46	17.23	1.71	21.59	15.42	1.81	18.83	13.66	1.92	16.18	11.97	2.05	13.67	10.34	2.20
	67 (19.4)	29.63	19.84	1.64	26.45	17.93	1.73	23.35	16.07	1.82	20.38	14.26	1.93	17.52	12.51	2.06	14.82	10.84	2.21
	72 (22.2)	32.64	16.28	1.65	29.13	14.63	1.74	25.73	13.02	1.84	22.46	11.48	1.95	19.33	10.00	2.08	16.37	8.58	2.22
750	57 (13.9)	26.50	26.50	1.63	23.85	23.85	1.72	21.24	21.24	1.82	18.71	18.71	1.93	16.26	16.26	2.06	13.93	13.93	2.20
	62 (16.7)	27.30	24.28	1.63	24.37	22.04	1.72	21.53	19.84	1.82	18.80	17.68	1.93	16.29	16.29	2.06	13.95	13.95	2.20
	63 (17.2)††	27.76	19.72	1.63	24.77	17.82	1.72	21.86	15.96	1.82	19.04	14.15	1.93	16.35	12.41	2.06	13.82	10.73	2.20
	67 (19.4)	30.00	20.53	1.65	26.77	18.56	1.73	23.63	16.64	1.83	20.59	14.78	1.94	17.70	12.98	2.07	14.96	11.25	2.21
	72 (22.2)	33.03	16.71	1.66	29.46	15.02	1.75	26.01	13.38	1.85	22.68	11.80	1.96	19.51	10.29	2.08	16.51	8.84	2.23
800	57 (13.9)	27.10	27.10	1.64	24.38	24.38	1.73	21.70	21.70	1.83	19.10	19.10	1.94	16.60	16.60	2.07	14.20	14.20	2.21
	62 (16.7)	27.65	25.20	1.64	24.69	22.88	1.73	21.82	20.59	1.83	19.13	19.13	1.94	16.62	16.62	2.07	14.22	14.22	2.21
	63 (17.2)††	28.08	20.35	1.64	25.05	18.40	1.73	22.09	16.49	1.83	19.23	14.63	1.94	16.51	12.83	2.07	13.94	11.11	2.21
	67 (19.4)	30.34	21.20	1.66	27.05	19.18	1.74	23.86	17.21	1.84	20.78	15.29	1.95	17.85	13.44	2.08	15.08	11.66	2.22
	72 (22.2)	33.37	17.13	1.67	29.75	15.40	1.76	26.25	13.73	1.85	22.88	12.12	1.96	19.67	10.57	2.09	16.63	9.09	2.24
835	57 (13.9)	27.50	27.50	1.65	24.72	24.72	1.74	22.00	22.00	1.83	19.36	19.36	1.95	16.81	16.81	2.07	14.38	14.38	2.22
	62 (16.7)	27.89	25.83	1.65	24.90	23.45	1.74	22.03	22.03	1.83	19.39	19.39	1.95	16.84	16.84	2.07	14.40	14.40	2.22
	63 (17.2)††	28.29	20.79	1.65	25.22	18.80	1.74	22.23	16.85	1.84	19.35	14.96	1.95	16.61	13.13	2.07	14.02	11.38	2.22
	67 (19.4)	30.54	21.66	1.66	27.22	19.61	1.75	24.00	17.60	1.85	20.90	15.65	1.96	17.95	13.76	2.08	15.16	11.94	2.23
	72 (22.2)	33.58	17.41	1.68	29.93	15.67	1.76	26.39	13.97	1.86	23.00	12.33	1.97	19.77	10.77	2.10	16.70	9.27	2.24
900	57 (13.9)	28.17	28.17	1.66	25.31	25.31	1.75	22.51	22.51	1.85	19.79	19.79	1.96	17.18	17.18	2.08	14.67	14.67	2.23
	62 (16.7)	28.32	26.95	1.66	25.34	25.34	1.75	22.55	22.55	1.85	19.82	19.82	1.96	17.20	17.20	2.08	14.70	14.70	2.23
	63 (17.2)††	28.63	21.58	1.66	25.50	19.52	1.75	22.47	17.51	1.85	19.55	15.56	1.96	16.77	13.67	2.08	14.15	11.85	2.23
	67 (19.4)	30.88	22.51	1.68	27.51	20.38	1.76	24.24	18.31	1.86	21.10	16.29	1.97	18.11	14.34	2.09	15.28	12.46	2.24
	72 (22.2)	33.93	17.93	1.69	30.22	16.14	1.78	26.64	14.41	1.87	23.20	12.73	1.98	19.92	11.12	2.11	16.82	9.58	2.25

See notes on page 16

DETAILED COOLING CAPACITIES# (CONTINUED)

EVAPORATOR AIR		CONDENSER ENTERING AIR TEMPERATURES °F (°C)																	
		75 (23.9)			85 (29.4)			95 (35)			105 (40.6)			115 (46.1)			125 (51.7)		
CFM	EWB °F (°C)	Capacity MBtuh		Total Sys. KW**	Capacity MBtuh		Total Sys. KW**	Capacity MBtuh		Total Sys. KW**	Capacity MBtuh		Total Sys. KW**	Capacity MBtuh		Total Sys. KW**	Capacity MBtuh		Total Sys. KW**
		Total	Sens‡		Total	Sens‡		Total	Sens‡		Total	Sens‡		Total	Sens‡		Total	Sens‡	
24ANB724C**31 Outdoor Section With CNPV*3117A**+58CV(A,X)090−16 Indoor Section − Low																			
450	57 (13.9)	17.62	17.62	1.05	16.16	16.16	1.25	14.68	14.68	1.48	13.20	13.20	1.76	11.79	11.79	2.07	10.43	10.43	2.44
	62 (16.7)	18.73	15.76	1.04	17.00	14.15	1.24	15.27	12.56	1.48	13.57	11.03	1.75	11.95	9.57	2.07	10.46	10.45	2.44
	63 (17.2)††	19.10	13.04	1.04	17.34	11.64	1.24	15.56	10.27	1.47	13.83	8.95	1.75	12.16	7.70	2.07	10.58	6.53	2.44
	67 (19.4)	20.70	13.55	1.02	18.79	12.11	1.22	16.89	10.70	1.46	15.02	9.35	1.73	13.24	8.06	2.06	11.55	6.85	2.43
	72 (22.2)	22.95	11.31	1.00	20.84	10.04	1.20	18.74	8.82	1.44	16.71	7.65	1.71	14.76	6.54	2.04	12.91	5.51	2.42
500	57 (13.9)	18.38	18.38	1.05	16.84	16.84	1.25	15.28	15.28	1.48	13.74	13.74	1.75	12.25	12.25	2.07	10.84	10.84	2.44
	62 (16.7)	19.20	16.75	1.04	17.41	15.05	1.24	15.63	13.38	1.48	13.90	11.76	1.75	12.28	12.28	2.07	10.85	10.85	2.44
	63 (17.2)††	19.56	13.72	1.04	17.73	12.26	1.24	15.90	10.83	1.48	14.11	9.45	1.75	12.40	8.15	2.07	10.78	6.92	2.44
	67 (19.4)	21.19	14.29	1.02	19.21	12.78	1.22	17.25	11.30	1.46	15.33	9.89	1.74	13.49	8.54	2.06	11.76	7.27	2.44
	72 (22.2)	23.47	11.79	1.00	21.29	10.47	1.20	19.13	9.20	1.44	17.03	7.99	1.72	15.02	6.85	2.05	13.12	5.78	2.43
550	57 (13.9)	19.06	19.06	1.05	17.44	17.44	1.25	15.81	15.81	1.48	14.21	14.21	1.75	12.66	12.66	2.07	11.19	11.19	2.44
	62 (16.7)	19.60	17.71	1.04	17.77	15.93	1.24	15.96	14.17	1.48	14.23	14.23	1.75	12.68	12.68	2.07	11.21	11.21	2.45
	63 (17.2)††	19.94	14.38	1.04	18.06	12.86	1.24	16.18	11.37	1.48	14.34	9.94	1.75	12.59	8.58	2.08	10.94	7.29	2.45
	67 (19.4)	21.60	15.00	1.02	19.57	13.42	1.22	17.55	11.89	1.46	15.58	10.42	1.74	13.70	9.01	2.06	11.93	7.68	2.44
	72 (22.2)	23.90	12.24	1.00	21.66	10.89	1.20	19.44	9.57	1.44	17.29	8.32	1.72	15.24	7.14	2.05	13.30	6.04	2.43
600	57 (13.9)	19.66	19.66	1.05	17.98	17.98	1.25	16.28	16.28	1.48	14.62	14.62	1.75	13.02	13.02	2.08	11.50	11.50	2.45
	62 (16.7)	19.96	18.65	1.04	18.11	16.78	1.24	16.31	16.31	1.48	14.65	14.65	1.75	13.04	13.04	2.08	11.52	11.52	2.45
	63 (17.2)††	20.26	15.03	1.04	18.33	13.45	1.24	16.41	11.90	1.48	14.54	10.42	1.76	12.76	9.00	2.08	11.08	7.67	2.45
	67 (19.4)	21.94	15.69	1.03	19.86	14.06	1.23	17.80	12.47	1.46	15.79	10.93	1.74	13.88	9.47	2.07	12.08	8.09	2.45
	72 (22.2)	24.26	12.68	1.00	21.96	11.29	1.20	19.70	9.94	1.44	17.50	8.65	1.72	15.41	7.44	2.06	13.44	6.30	2.44
650	57 (13.9)	20.20	20.20	1.05	18.46	18.46	1.25	16.71	16.71	1.48	15.00	15.00	1.76	13.35	13.35	2.08	11.78	11.78	2.45
	62 (16.7)	20.31	19.56	1.05	18.49	18.49	1.25	16.74	16.74	1.48	15.02	15.02	1.76	13.37	13.37	2.08	11.80	11.80	2.45
	63 (17.2)††	20.54	15.66	1.05	18.58	14.03	1.25	16.62	12.42	1.48	14.72	10.89	1.76	12.90	9.42	2.09	11.21	8.03	2.46
	67 (19.4)	22.24	16.37	1.03	20.11	14.68	1.23	18.01	13.03	1.47	15.97	11.44	1.75	14.03	9.92	2.07	12.21	8.48	2.45
	72 (22.2)	24.57	13.12	1.00	22.22	11.68	1.20	19.91	10.29	1.44	17.68	8.97	1.73	15.56	7.72	2.06	13.56	6.54	2.45
670	57 (13.9)	20.41	20.41	1.05	18.64	18.64	1.25	16.87	16.87	1.48	15.14	15.14	1.76	13.47	13.47	2.08	11.88	11.88	2.46
	62 (16.7)	20.46	20.36	1.05	18.67	18.67	1.25	16.90	16.90	1.48	15.16	15.16	1.76	13.49	13.49	2.08	11.90	11.90	2.46
	63 (17.2)††	20.64	15.91	1.05	18.66	14.25	1.25	16.69	12.63	1.48	14.78	11.07	1.76	12.96	9.58	2.09	11.26	8.17	2.46
	67 (19.4)	22.34	16.64	1.03	20.20	14.92	1.23	18.09	13.25	1.47	16.04	11.64	1.75	14.09	10.10	2.08	12.26	8.64	2.45
	72 (22.2)	24.67	13.29	1.01	22.31	11.84	1.21	19.99	10.43	1.45	17.75	9.09	1.73	15.61	7.83	2.06	13.60	6.64	2.45
700	57 (13.9)	20.70	20.70	1.05	18.90	18.90	1.25	17.10	17.10	1.48	15.34	15.34	1.76	13.64	13.64	2.08	12.03	12.03	2.46
	62 (16.7)	20.73	20.73	1.05	18.93	18.93	1.25	17.13	17.13	1.48	15.36	15.36	1.76	13.66	13.66	2.08	12.05	12.05	2.46
	63 (17.2)††	20.79	16.28	1.05	18.79	14.59	1.25	16.80	12.94	1.49	14.87	11.35	1.77	13.04	9.83	2.09	11.33	8.38	2.47
	67 (19.4)	22.49	17.03	1.03	20.33	15.28	1.23	18.20	13.58	1.47	16.13	11.93	1.75	14.16	10.36	2.08	12.33	8.87	2.46
	72 (22.2)	24.82	13.53	1.01	22.44	12.06	1.21	20.10	10.64	1.45	17.84	9.28	1.73	15.69	7.99	2.07	13.66	6.78	2.45

See notes on page 16

DETAILED COOLING CAPACITIES# (CONTINUED)

EVAPORATOR AIR		CONDENSER ENTERING AIR TEMPERATURES °F (°C)																	
		75 (23.9)			85 (29.4)			95 (35)			105 (40.6)			115 (46.1)			125 (51.7)		
CFM	EWB °F (°C)	Capacity MBtuh		Total Sys. KW**	Capacity MBtuh		Total Sys. KW**	Capacity MBtuh		Total Sys. KW**	Capacity MBtuh		Total Sys. KW**	Capacity MBtuh		Total Sys. KW**	Capacity MBtuh		Total Sys. KW**
		Total	Sens‡		Total	Sens‡		Total	Sens‡		Total	Sens‡		Total	Sens‡		Total	Sens‡	
24ANB736C31 Outdoor Section With CNPV*4821A**+58CV(A,X)090–16 Indoor Section – High**																			
900	57 (13.9)	35.84	35.84	2.28	33.31	33.31	2.47	30.78	30.78	2.70	28.23	28.23	2.96	25.63	25.63	3.26	22.99	22.99	3.58
	62 (16.7)	38.02	31.58	2.30	35.06	29.75	2.49	32.11	27.93	2.72	29.14	26.10	2.97	26.15	24.26	3.26	23.16	22.40	3.58
	63 (17.2)††	38.77	26.12	2.30	35.74	24.49	2.50	32.71	22.86	2.72	29.66	21.22	2.98	26.58	19.58	3.27	23.48	17.94	3.58
	67 (19.4)	41.84	27.07	2.33	38.59	25.41	2.52	35.31	23.74	2.74	32.02	22.07	3.00	28.69	20.39	3.29	25.34	18.71	3.60
	72 (22.2)	46.07	22.49	2.37	42.48	20.99	2.56	38.88	19.49	2.77	35.25	17.98	3.03	31.59	16.46	3.31	27.88	14.95	3.63
975	57 (13.9)	36.91	36.91	2.30	34.29	34.29	2.50	31.67	31.67	2.73	29.01	29.01	2.99	26.31	26.31	3.28	23.57	23.57	3.60
	62 (16.7)	38.68	32.98	2.32	35.66	31.09	2.51	32.63	29.20	2.74	29.60	27.31	2.99	26.56	25.39	3.28	23.61	23.61	3.60
	63 (17.2)††	39.40	27.07	2.32	36.30	25.40	2.52	33.20	23.73	2.74	30.07	22.04	3.00	26.93	20.36	3.28	23.76	18.68	3.60
	67 (19.4)	42.51	28.10	2.35	39.17	26.38	2.54	35.82	24.67	2.76	32.44	22.95	3.02	29.04	21.23	3.30	25.62	19.50	3.62
	72 (22.2)	46.76	23.13	2.40	43.10	21.60	2.58	39.41	20.07	2.79	35.69	18.53	3.04	31.95	16.98	3.33	28.17	15.43	3.64
1005	57 (13.9)	37.31	37.31	2.31	34.65	34.65	2.51	31.99	31.99	2.74	29.30	29.30	2.99	26.56	26.56	3.28	23.78	23.78	3.60
	62 (16.7)	38.93	33.53	2.33	35.87	31.61	2.52	32.83	29.70	2.74	29.77	27.78	3.00	26.72	25.82	3.29	23.82	23.82	3.60
	63 (17.2)††	39.63	27.45	2.33	36.51	25.76	2.52	33.38	24.06	2.75	30.22	22.37	3.00	27.05	20.67	3.29	23.85	18.96	3.60
	67 (19.4)	42.75	28.49	2.36	39.37	26.76	2.55	36.00	25.03	2.77	32.59	23.29	3.02	29.17	21.56	3.31	25.71	19.81	3.62
	72 (22.2)	47.01	23.39	2.40	43.32	21.84	2.58	39.60	20.29	2.80	35.85	18.74	3.05	32.08	17.18	3.34	28.27	15.62	3.65
1200	57 (13.9)	39.58	39.58	2.37	36.72	36.72	2.56	33.84	33.84	2.79	30.92	30.92	3.04	27.97	27.97	3.33	24.98	24.98	3.65
	62 (16.7)	40.28	36.94	2.38	37.11	34.86	2.57	33.98	32.74	2.79	30.97	30.97	3.04	28.01	28.01	3.33	25.01	25.01	3.65
	63 (17.2)††	40.84	29.78	2.38	37.56	27.98	2.57	34.29	26.19	2.79	31.00	24.39	3.04	27.69	22.59	3.33	24.38	20.78	3.64
	67 (19.4)	44.00	30.99	2.41	40.46	29.14	2.59	36.93	27.31	2.81	33.39	25.47	3.07	29.82	23.62	3.35	26.24	21.77	3.66
	72 (22.2)	48.33	24.94	2.45	44.46	23.32	2.63	40.57	21.70	2.84	36.66	20.07	3.09	32.73	18.44	3.38	28.78	16.81	3.69
1350	57 (13.9)	41.01	41.01	2.41	38.01	38.01	2.60	34.98	34.98	2.82	31.93	31.93	3.08	28.84	28.84	3.37	25.70	25.70	3.68
	62 (16.7)	41.19	39.34	2.41	38.05	38.05	2.60	35.03	35.03	2.82	31.97	31.97	3.08	28.88	28.88	3.37	25.73	25.73	3.68
	63 (17.2)††	41.54	31.48	2.42	38.18	29.61	2.60	34.82	27.74	2.82	31.44	25.87	3.07	28.06	23.99	3.36	24.68	22.09	3.67
	67 (19.4)	44.70	32.80	2.45	41.09	30.89	2.63	37.47	28.98	2.85	33.83	27.06	3.10	30.19	25.13	3.38	26.53	23.19	3.69
	72 (22.2)	49.07	26.06	2.49	45.10	24.39	2.67	41.11	22.71	2.88	37.11	21.04	3.12	33.08	19.36	3.41	29.04	17.68	3.72
24ANB736C31 Outdoor Section With CNPV*4821A**+58CV(A,X)090–16 Indoor Section – Low**																			
720	57 (13.9)	26.16	26.16	1.51	24.56	24.56	1.75	22.93	22.93	2.02	21.26	21.26	2.34	19.53	19.53	2.71	17.74	17.74	3.15
	62 (16.7)	27.22	23.86	1.51	25.33	21.80	1.74	23.44	19.77	2.02	21.51	17.78	2.34	19.57	19.55	2.71	17.77	17.77	3.15
	63 (17.2)††	27.75	19.50	1.50	25.81	17.73	1.74	23.86	15.99	2.01	21.86	14.30	2.34	19.80	12.63	2.71	17.68	11.01	3.15
	67 (19.4)	30.15	20.35	1.48	28.03	18.51	1.72	25.90	16.71	2.00	23.75	14.95	2.32	21.53	13.24	2.70	19.24	11.56	3.13
	72 (22.2)	33.42	16.77	1.46	31.06	15.17	1.70	28.71	13.59	1.98	26.32	12.07	2.30	23.88	10.60	2.67	21.37	9.16	3.10
780	57 (13.9)	26.97	26.97	1.52	25.30	25.30	1.75	23.60	23.60	2.02	21.87	21.87	2.34	20.07	20.07	2.72	18.21	18.21	3.15
	62 (16.7)	27.71	25.00	1.51	25.78	22.85	1.75	23.85	20.74	2.02	21.92	21.84	2.34	20.11	20.11	2.72	18.24	18.24	3.15
	63 (17.2)††	28.20	20.29	1.51	26.21	18.45	1.74	24.21	16.66	2.02	22.17	14.90	2.34	20.07	13.18	2.72	17.90	11.50	3.16
	67 (19.4)	30.62	21.18	1.49	28.44	19.28	1.73	26.27	17.42	2.00	24.06	15.60	2.33	21.79	13.82	2.70	19.46	12.09	3.13
	72 (22.2)	33.92	17.30	1.46	31.51	15.64	1.70	29.09	14.04	1.98	26.65	12.48	2.31	24.16	10.96	2.68	21.60	9.49	3.11
835	57 (13.9)	27.64	27.64	1.52	25.91	25.91	1.75	24.16	24.16	2.03	22.37	22.37	2.35	20.52	20.52	2.72	18.59	18.59	3.15
	62 (16.7)	28.12	26.02	1.51	26.16	23.78	1.75	24.23	24.10	2.03	22.41	22.41	2.35	20.55	20.55	2.72	18.62	18.62	3.15
	63 (17.2)††	28.57	20.99	1.51	26.54	19.10	1.75	24.49	17.26	2.02	22.41	15.45	2.35	20.28	13.68	2.72	18.08	11.95	3.16
	67 (19.4)	30.99	21.93	1.49	28.78	19.97	1.73	26.56	18.06	2.01	24.30	16.19	2.33	22.00	14.36	2.71	19.64	12.57	3.14
	72 (22.2)	34.32	17.77	1.47	31.86	16.08	1.71	29.39	14.44	1.99	26.91	12.85	2.31	24.38	11.29	2.68	21.77	9.79	3.11
960	57 (13.9)	28.98	28.98	1.52	27.13	27.13	1.76	25.27	25.27	2.03	23.35	23.35	2.35	21.38	21.38	2.73	19.34	19.34	3.16
	62 (16.7)	29.01	29.01	1.52	27.17	27.17	1.76	25.30	25.30	2.03	23.39	23.39	2.35	21.41	21.41	2.73	19.37	19.37	3.16
	63 (17.2)††	29.25	22.53	1.52	27.14	20.52	1.76	25.03	18.57	2.04	22.87	16.64	2.36	20.67	14.76	2.74	18.42	12.92	3.17
	67 (19.4)	31.69	23.58	1.50	29.39	21.49	1.74	27.09	19.46	2.02	24.76	17.47	2.34	22.39	15.52	2.72	19.97	13.62	3.15
	72 (22.2)	35.05	18.80	1.48	32.49	17.03	1.72	29.94	15.32	2.00	27.37	13.65	2.32	24.76	12.02	2.70	22.08	10.44	3.13
1080	57 (13.9)	30.06	30.06	1.53	28.11	28.11	1.77	26.14	26.14	2.04	24.13	24.13	2.36	22.07	22.07	2.74	19.93	19.93	3.17
	62 (16.7)	30.11	30.11	1.53	28.15	28.15	1.77	26.18	26.18	2.04	24.16	24.16	2.36	22.10	22.10	2.74	19.96	19.96	3.17
	63 (17.2)††	29.77	23.95	1.53	27.60	21.84	1.77	25.42	19.77	2.05	23.22	17.74	2.37	20.98	15.75	2.75	18.70	13.78	3.19
	67 (19.4)	32.21	25.10	1.51	29.85	22.90	1.75	27.49	20.76	2.03	25.11	18.66	2.36	22.70	16.60	2.73	20.24	14.57	3.17
	72 (22.2)	35.58	19.75	1.49	32.95	17.90	1.73	30.34	16.12	2.01	27.70	14.38	2.34	25.03	12.68	2.71	22.29	11.04	3.14

See notes on page 16

DETAILED COOLING CAPACITIES# (CONTINUED)

24ANB7C**

EVAPORATOR AIR		CONDENSER ENTERING AIR TEMPERATURES °F (°C)																	
		75 (23.9)			85 (29.4)			95 (35)			105 (40.6)			115 (46.1)			125 (51.7)		
CFM	EWB °F (°C)	Capacity MBtuh		Total Sys. KW**	Capacity MBtuh		Total Sys. KW**	Capacity MBtuh		Total Sys. KW**	Capacity MBtuh		Total Sys. KW**	Capacity MBtuh		Total Sys. KW**	Capacity MBtuh		Total Sys. KW**
		Total	Sens‡		Total	Sens‡		Total	Sens‡		Total	Sens‡		Total	Sens‡		Total	Sens‡	
24ANB748C31 Outdoor Section With CNPV*6124A**+58CV(A,X)135–22 Indoor Section – High**																			
1200	57 (13.9)	47.30	47.30	2.91	44.22	44.22	3.23	41.02	41.02	3.61	37.80	37.80	4.04	34.62	34.62	4.56	31.52	31.52	5.16
	62 (16.7)	50.25	41.83	2.93	46.59	39.45	3.25	42.79	37.01	3.62	39.01	34.60	4.05	35.32	32.24	4.56	31.77	29.95	5.17
	63 (17.2)††	51.23	34.57	2.93	47.48	32.43	3.25	43.59	30.24	3.63	39.71	28.08	4.06	35.92	25.98	4.57	32.25	23.96	5.17
	67 (19.4)	55.28	35.82	2.95	51.21	33.62	3.27	47.04	31.41	3.65	42.87	29.21	4.09	38.78	27.06	4.60	34.83	25.00	5.21
	72 (22.2)	60.74	29.68	2.97	56.26	27.68	3.30	51.68	25.68	3.68	47.07	23.68	4.12	42.67	21.79	4.65	37.97	19.81	5.24
1300	57 (13.9)	48.75	48.75	2.94	45.52	45.52	3.26	42.20	42.20	3.64	38.85	38.85	4.08	35.56	35.56	4.59	32.33	32.33	5.20
	62 (16.7)	51.12	43.71	2.95	47.36	41.24	3.27	43.48	38.72	3.65	39.61	36.23	4.08	35.87	33.78	4.59	32.38	32.38	5.20
	63 (17.2)††	52.07	35.84	2.96	48.22	33.65	3.28	44.23	31.40	3.65	40.26	29.19	4.09	36.38	27.03	4.60	32.63	24.95	5.20
	67 (19.4)	56.14	37.18	2.98	51.97	34.92	3.30	47.69	32.64	3.68	43.42	30.38	4.12	39.25	28.19	4.63	35.21	26.06	5.24
	72 (22.2)	61.64	30.52	3.00	57.05	28.49	3.33	52.36	26.44	3.71	47.70	24.43	4.15	43.13	22.47	4.67	38.69	20.58	5.29
1355	57 (13.9)	49.48	49.48	2.96	46.20	46.20	3.28	42.80	42.80	3.66	39.39	39.39	4.09	36.03	36.03	4.61	32.74	32.74	5.22
	62 (16.7)	51.56	44.72	2.97	47.74	42.20	3.29	43.82	39.65	3.66	39.92	37.10	4.10	36.17	34.58	4.61	32.79	32.79	5.22
	63 (17.2)††	52.48	36.53	2.97	48.57	34.30	3.30	44.54	32.02	3.67	40.53	29.78	4.10	36.60	27.60	4.62	32.81	25.49	5.22
	67 (19.4)	56.56	37.91	2.99	52.33	35.62	3.32	48.00	33.31	3.69	43.69	31.01	4.13	39.47	28.79	4.65	35.39	26.63	5.26
	72 (22.2)	62.08	30.97	3.01	57.42	28.92	3.34	52.68	26.85	3.72	47.97	24.82	4.17	43.35	22.84	4.69	38.88	20.92	5.31
1500	57 (13.9)	51.23	51.23	3.00	47.78	47.78	3.33	44.22	44.22	3.70	40.65	40.65	4.14	37.14	37.14	4.66	33.69	33.69	5.27
	62 (16.7)	52.58	47.33	3.01	48.66	44.69	3.33	44.65	42.00	3.70	40.72	40.58	4.14	37.19	37.19	4.66	33.74	33.74	5.27
	63 (17.2)††	53.41	38.29	3.01	49.38	35.97	3.34	45.25	33.63	3.71	41.12	31.31	4.14	37.11	29.05	4.66	33.23	26.87	5.26
	67 (19.4)	57.51	39.78	3.03	53.15	37.41	3.35	48.71	35.02	3.73	44.29	32.66	4.17	39.97	30.35	4.69	35.81	28.12	5.30
	72 (22.2)	63.05	32.12	3.05	58.27	30.02	3.38	53.40	27.90	3.76	48.57	25.81	4.21	43.85	23.78	4.73	39.27	21.82	5.35
1600	57 (13.9)	52.31	52.31	3.03	48.75	48.75	3.35	45.10	45.10	3.73	41.42	41.42	4.17	37.81	37.81	4.69	34.28	34.28	5.30
	62 (16.7)	53.20	49.06	3.03	49.23	46.33	3.36	45.22	44.88	3.73	41.48	41.48	4.17	37.86	37.86	4.69	34.32	34.32	5.30
	63 (17.2)††	53.95	39.47	3.04	49.85	37.11	3.36	45.65	34.71	3.73	41.47	32.34	4.17	37.40	30.03	4.68	33.47	27.80	5.29
	67 (19.4)	58.05	41.04	3.05	53.63	38.62	3.38	49.12	36.18	3.76	44.64	33.76	4.20	40.26	31.41	4.72	36.04	29.12	5.33
	72 (22.2)	63.61	32.89	3.07	58.75	30.75	3.40	53.81	28.60	3.79	48.91	26.48	4.23	44.12	24.41	4.76	39.49	22.42	5.38
1700	57 (13.9)	53.29	53.29	3.06	49.64	49.64	3.38	45.88	45.88	3.76	42.12	42.12	4.20	38.42	38.42	4.72	34.80	34.80	5.33
	62 (16.7)	53.79	50.73	3.06	49.81	47.89	3.38	45.95	45.95	3.76	42.18	42.18	4.20	38.47	38.47	4.72	34.84	34.84	5.33
	63 (17.2)††	54.43	40.62	3.06	50.27	38.21	3.39	46.01	35.77	3.76	41.77	33.35	4.20	37.65	30.99	4.71	33.68	28.70	5.32
	67 (19.4)	58.53	42.28	3.08	54.05	39.81	3.41	49.47	37.32	3.78	44.94	34.84	4.22	40.51	32.44	4.74	36.24	30.10	5.35
	72 (22.2)	64.10	33.64	3.10	59.16	31.47	3.43	54.15	29.28	3.81	49.20	27.12	4.26	44.36	25.03	4.79	39.67	23.01	5.40
24ANB748C31 Outdoor Section With CNPV*6124A**+58CV(A,X)135–22 Indoor Section – Low**																			
960	57 (13.9)	34.79	34.79	1.95	32.17	32.17	2.27	29.47	29.47	2.63	26.72	26.72	3.04	23.95	23.95	3.52	21.20	21.20	4.07
	62 (16.7)	36.22	32.17	1.94	33.19	29.54	2.26	30.08	26.91	2.62	26.94	24.30	3.04	24.00	24.00	3.52	21.24	21.24	4.07
	63 (17.2)††	36.92	26.30	1.93	33.83	24.03	2.25	30.63	21.75	2.62	27.37	19.49	3.04	24.11	17.30	3.52	20.88	15.17	4.07
	67 (19.4)	40.15	27.45	1.91	36.84	25.12	2.23	33.42	22.79	2.59	29.95	20.49	3.01	26.47	18.23	3.49	23.02	16.05	4.04
	72 (22.2)	44.69	22.68	1.87	41.06	20.65	2.19	37.33	18.62	2.56	33.54	16.62	2.98	29.75	14.67	3.46	25.97	12.78	4.01
1010	57 (13.9)	35.48	35.48	1.95	32.81	32.81	2.27	30.04	30.04	2.63	27.23	27.23	3.05	24.40	24.40	3.52	21.59	21.59	4.07
	62 (16.7)	36.64	33.15	1.94	33.58	30.45	2.26	30.44	27.75	2.63	27.30	27.20	3.04	24.45	24.45	3.52	21.63	21.63	4.07
	63 (17.2)††	37.32	26.98	1.94	34.18	24.66	2.26	30.94	22.33	2.62	27.63	20.03	3.04	24.33	17.79	3.52	21.07	15.62	4.08
	67 (19.4)	40.58	28.18	1.91	37.22	25.80	2.23	33.76	23.42	2.60	30.24	21.06	3.02	26.71	18.76	3.50	23.22	16.53	4.05
	72 (22.2)	45.14	23.15	1.87	41.47	21.09	2.20	37.68	19.02	2.57	33.84	16.99	2.99	29.99	15.01	3.47	26.17	13.10	4.02
1120	57 (13.9)	36.87	36.87	1.95	34.08	34.08	2.27	31.19	31.19	2.63	28.25	28.25	3.05	25.31	25.31	3.53	22.38	22.38	4.07
	62 (16.7)	37.49	35.25	1.95	34.37	32.41	2.27	31.24	31.24	2.63	28.30	28.30	3.05	25.36	25.36	3.53	22.42	22.42	4.07
	63 (17.2)††	38.08	28.43	1.94	34.86	26.01	2.26	31.53	23.59	2.63	28.15	21.19	3.05	24.76	18.85	3.53	21.43	16.59	4.09
	67 (19.4)	41.40	29.73	1.91	37.95	27.25	2.24	34.39	24.77	2.61	30.78	22.31	3.03	27.17	19.91	3.51	23.60	17.58	4.06
	72 (22.2)	46.01	24.15	1.88	42.22	22.02	2.20	38.32	19.89	2.57	34.40	17.78	3.00	30.46	15.73	3.48	26.55	13.75	4.03
1280	57 (13.9)	38.62	38.62	1.96	35.67	35.67	2.28	32.63	32.63	2.64	29.54	29.54	3.06	26.44	26.44	3.53	23.35	23.35	4.08
	62 (16.7)	38.70	38.62	1.95	35.73	35.73	2.27	32.68	32.68	2.64	29.59	29.59	3.06	26.48	26.48	3.53	23.39	23.39	4.08
	63 (17.2)††	38.98	30.46	1.95	35.66	27.91	2.28	32.23	25.35	2.64	28.75	22.82	3.07	25.29	20.35	3.55	21.88	17.94	4.10
	67 (19.4)	42.34	31.94	1.93	38.79	29.29	2.25	35.13	26.67	2.62	31.42	24.07	3.04	27.71	21.52	3.52	24.06	19.04	4.07
	72 (22.2)	47.00	25.53	1.89	43.09	23.30	2.22	39.09	21.07	2.59	35.04	18.88	3.01	30.99	16.73	3.49	26.97	14.66	4.04
1440	57 (13.9)	40.11	40.11	1.96	37.03	37.03	2.28	33.85	33.85	2.65	30.63	30.63	3.07	27.39	27.39	3.54	24.17	24.17	4.09
	62 (16.7)	40.18	40.18	1.96	37.09	37.09	2.28	33.91	33.91	2.65	30.68	30.68	3.07	27.43	27.43	3.54	24.20	24.20	4.09
	63 (17.2)††	39.70	32.42	1.97	36.29	29.74	2.29	32.80	27.05	2.66	29.25	24.39	3.08	25.73	21.77	3.56	22.32	22.12	4.12
	67 (19.4)	43.09	34.04	1.94	39.46	31.27	2.26	35.72	28.51	2.63	31.92	25.76	3.06	28.16	23.08	3.54	24.46	20.44	4.09
	72 (22.2)	47.76	26.84	1.90	43.76	24.52	2.23	39.67	22.21	2.60	35.52	19.93	3.03	31.38	17.70	3.51	27.28	15.54	4.06

See notes on page 16

DETAILED COOLING CAPACITIES# (CONTINUED)

EVAPORATOR AIR		CONDENSER ENTERING AIR TEMPERATURES °F (°C)																	
		75 (23.9)			85 (29.4)			95 (35)			105 (40.6)			115 (46.1)			125 (51.7)		
CFM	EWB °F (°C)	Capacity MBtuh		Total Sys. KW**	Capacity MBtuh		Total Sys. KW**	Capacity MBtuh		Total Sys. KW**	Capacity MBtuh		Total Sys. KW**	Capacity MBtuh		Total Sys. KW**	Capacity MBtuh		Total Sys. KW**
		Total	Sens‡		Total	Sens‡		Total	Sens‡		Total	Sens‡		Total	Sens‡		Total	Sens‡	
24ANB760C**31 Outdoor Section With CNPV*6124A**+58CV(A,X)135–22 Indoor Section – High																			
1500	57 (13.9)	53.72	53.72	3.55	52.08	52.08	3.91	50.28	50.28	4.33	48.30	48.30	4.81	46.01	46.01	5.36	43.38	43.38	5.99
	62 (16.7)	56.39	48.10	3.57	54.23	47.06	3.93	51.92	45.97	4.34	49.38	44.79	4.82	46.54	43.46	5.37	43.43	43.39	5.99
	63 (17.2)††	57.44	39.42	3.58	55.21	38.38	3.94	52.82	37.28	4.35	50.17	36.09	4.83	47.21	34.79	5.38	43.85	33.34	6.00
	67 (19.4)	62.03	40.93	3.63	59.60	39.87	3.98	57.01	38.77	4.40	54.12	37.57	4.87	50.90	36.25	5.42	47.27	34.80	6.04
	72 (22.2)	68.33	33.67	3.69	65.64	32.60	4.04	62.75	31.47	4.46	59.55	30.25	4.94	55.98	28.93	5.49	51.96	27.46	6.11
1625	57 (13.9)	55.23	55.23	3.60	53.51	53.51	3.96	51.63	51.63	4.38	49.53	49.53	4.86	47.13	47.13	5.41	44.38	44.38	6.04
	62 (16.7)	57.29	50.23	3.62	55.06	49.18	3.97	52.69	48.06	4.39	50.09	46.83	4.87	47.27	46.92	5.41	44.44	44.44	6.04
	63 (17.2)††	58.28	40.86	3.63	55.98	39.80	3.98	53.49	38.69	4.40	50.76	37.48	4.87	47.71	36.16	5.42	44.28	34.69	6.04
	67 (19.4)	62.90	42.47	3.67	60.40	41.40	4.03	57.71	40.28	4.44	54.73	39.06	4.92	51.43	37.73	5.47	47.70	36.27	6.09
	72 (22.2)	69.27	34.62	3.74	66.48	33.54	4.09	63.48	32.39	4.50	60.19	31.16	4.98	56.52	29.81	5.53	52.40	28.33	6.15
1685	57 (13.9)	55.91	55.91	3.62	54.14	54.14	3.98	52.22	52.22	4.40	50.07	50.07	4.88	47.62	47.62	5.44	44.81	44.81	6.07
	62 (16.7)	57.68	51.23	3.64	55.44	50.17	4.00	53.03	49.03	4.41	50.43	47.77	4.89	47.70	47.70	5.44	44.88	44.88	6.07
	63 (17.2)††	58.64	41.54	3.65	56.29	40.47	4.00	53.77	39.34	4.42	51.02	38.14	4.89	47.93	36.81	5.44	44.47	35.33	6.06
	67 (19.4)	63.28	43.19	3.70	60.74	42.12	4.05	58.00	40.99	4.46	54.99	39.76	4.94	51.65	38.43	5.49	47.88	36.95	6.11
	72 (22.2)	69.67	35.07	3.76	66.84	33.98	4.11	63.79	32.82	4.52	60.46	31.59	5.00	56.74	30.23	5.55	52.59	28.75	6.18
1750	57 (13.9)	56.60	56.60	3.65	54.79	54.79	4.01	52.83	52.83	4.43	50.63	50.63	4.91	48.13	48.13	5.46	45.26	45.26	6.09
	62 (16.7)	58.08	52.30	3.66	55.82	51.22	4.02	53.40	50.06	4.43	50.81	48.74	4.91	48.20	48.20	5.46	45.32	45.32	6.09
	63 (17.2)††	59.00	42.26	3.67	56.61	41.18	4.03	54.06	40.05	4.44	51.27	38.84	4.92	48.15	37.49	5.46	44.65	36.01	6.08
	67 (19.4)	63.66	43.97	3.72	61.07	42.88	4.07	58.29	41.74	4.48	55.26	40.52	4.96	51.87	39.18	5.51	48.07	37.69	6.13
	72 (22.2)	70.06	35.54	3.78	67.19	34.44	4.13	64.11	33.28	4.55	60.73	32.04	5.02	56.97	30.68	5.57	52.77	29.18	6.20
2000	57 (13.9)	58.97	58.97	3.74	57.00	57.00	4.10	54.88	54.88	4.52	52.51	52.51	5.00	49.82	49.82	5.56	46.74	46.74	6.19
	62 (16.7)	59.49	56.22	3.75	57.21	55.01	4.11	54.96	54.96	4.52	52.59	52.59	5.01	49.88	49.88	5.56	46.80	46.80	6.19
	63 (17.2)††	60.13	44.93	3.75	57.65	43.84	4.11	54.99	42.69	4.52	52.08	41.43	5.00	48.84	40.07	5.55	45.22	38.55	6.17
	67 (19.4)	64.83	46.84	3.80	62.13	45.74	4.16	59.24	44.58	4.57	56.07	43.33	5.04	52.56	41.96	5.59	48.64	40.44	6.22
	72 (22.2)	71.31	37.29	3.87	68.31	36.17	4.22	65.08	34.98	4.63	61.55	33.71	5.11	57.65	32.34	5.66	53.29	30.81	6.28
2250	57 (13.9)	60.93	60.93	3.84	58.83	58.83	4.20	56.57	56.57	4.61	54.04	54.04	5.10	51.19	51.19	5.65	47.93	47.93	6.28
	62 (16.7)	61.01	61.01	3.84	58.91	58.91	4.20	56.65	56.65	4.62	54.11	54.11	5.10	51.25	51.25	5.65	47.98	47.98	6.28
	63 (17.2)††	61.01	47.48	3.84	58.43	46.37	4.19	55.68	45.19	4.60	52.69	43.92	5.08	49.36	42.51	5.63	45.67	40.93	6.25
	67 (19.4)	65.74	49.60	3.89	62.94	48.48	4.24	59.95	47.29	4.65	56.69	46.02	5.13	53.08	44.62	5.68	49.07	43.04	6.30
	72 (22.2)	72.25	38.94	3.95	69.12	37.79	4.30	65.78	36.59	4.71	62.14	35.31	5.19	58.12	33.90	5.74	53.64	32.37	6.36

See notes on page 16

DETAILED COOLING CAPACITIES# (CONTINUED)

EVAPORATOR AIR		CONDENSER ENTERING AIR TEMPERATURES °F (°C)																	
		75 (23.9)			85 (29.4)			95 (35)			105 (40.6)			115 (46.1)			125 (51.7)		
CFM	EWB °F (°C)	Capacity MBtuh		Total Sys. KW**	Capacity MBtuh		Total Sys. KW**	Capacity MBtuh		Total Sys. KW**	Capacity MBtuh		Total Sys. KW**	Capacity MBtuh		Total Sys. KW**	Capacity MBtuh		Total Sys. KW**
		Total	Sens‡		Total	Sens‡		Total	Sens‡		Total	Sens‡		Total	Sens‡		Total	Sens‡	
24ANB760C**31 Outdoor Section With CNPV*6124A**+58CV(A,X)135–22 Indoor Section – Low																			
1200	57 (13.9)	41.88	41.88	2.45	38.97	38.97	2.83	35.87	35.87	3.26	32.67	32.67	3.76	29.44	29.44	4.32	26.21	26.21	4.96
	62 (16.7)	43.21	38.96	2.44	39.82	35.81	2.82	36.26	32.65	3.26	32.73	32.73	3.76	29.50	29.50	4.32	26.26	26.26	4.96
	63 (17.2)††	44.00	31.63	2.44	40.50	28.92	2.82	36.83	26.20	3.26	33.04	23.50	3.76	29.23	20.88	4.32	25.45	18.35	4.97
	67 (19.4)	47.74	33.00	2.41	43.97	30.21	2.79	40.03	27.42	3.23	35.98	24.66	3.73	31.92	21.98	4.30	27.89	19.39	4.95
	72 (22.2)	52.84	26.95	2.37	48.70	24.52	2.76	44.39	22.08	3.20	39.99	19.69	3.71	35.56	17.38	4.28	31.15	15.16	4.92
1300	57 (13.9)	43.12	43.12	2.46	40.07	40.07	2.84	36.87	36.87	3.27	33.57	33.57	3.77	30.23	30.23	4.33	26.88	26.88	4.97
	62 (16.7)	43.95	40.81	2.45	40.50	37.54	2.84	36.95	36.84	3.27	33.63	33.63	3.77	30.28	30.28	4.33	26.93	26.93	4.97
	63 (17.2)††	44.65	32.91	2.45	41.08	30.11	2.83	37.33	27.30	3.27	33.47	24.52	3.77	29.59	21.81	4.34	25.75	19.21	4.99
	67 (19.4)	48.41	34.36	2.42	44.56	31.48	2.81	40.53	28.59	3.25	36.41	25.75	3.75	32.28	22.98	4.32	28.18	20.31	4.97
	72 (22.2)	53.55	27.80	2.39	49.32	25.31	2.77	44.92	22.82	3.22	40.43	20.37	3.72	35.92	18.00	4.29	31.44	15.72	4.94
1355	57 (13.9)	43.74	43.74	2.46	40.64	40.64	2.84	37.38	37.38	3.28	34.03	34.03	3.78	30.62	30.62	4.34	27.22	27.22	4.98
	62 (16.7)	44.33	41.81	2.46	40.87	38.45	2.84	37.45	37.45	3.28	34.08	34.08	3.78	30.67	30.67	4.34	27.26	27.26	4.98
	63 (17.2)††	44.98	33.60	2.46	41.36	30.75	2.84	37.57	27.89	3.28	33.68	25.07	3.78	29.76	22.31	4.35	25.89	19.67	5.00
	67 (19.4)	48.74	35.09	2.43	44.85	32.16	2.82	40.78	29.23	3.26	36.63	26.34	3.76	32.45	23.52	4.33	28.33	20.81	4.98
	72 (22.2)	53.90	28.26	2.39	49.62	25.74	2.78	45.17	23.21	3.23	40.64	20.73	3.73	36.09	18.33	4.30	31.57	16.03	4.95
1400	57 (13.9)	44.23	44.23	2.47	41.08	41.08	2.85	37.78	37.78	3.29	34.37	34.37	3.78	30.92	30.92	4.35	27.47	27.47	4.99
	62 (16.7)	44.63	42.61	2.47	41.19	40.98	2.85	37.85	37.85	3.29	34.43	34.43	3.78	30.97	30.97	4.35	27.51	27.51	4.99
	63 (17.2)††	45.23	34.15	2.46	41.58	31.27	2.85	37.76	28.37	3.29	33.84	25.51	3.79	29.89	22.72	4.36	26.01	20.04	5.01
	67 (19.4)	48.99	35.68	2.44	45.07	32.72	2.82	40.96	29.75	3.26	36.79	26.82	3.77	32.59	23.96	4.34	28.44	21.21	4.98
	72 (22.2)	54.16	28.63	2.40	49.85	26.08	2.79	45.36	23.53	3.23	40.80	21.02	3.74	36.22	18.60	4.31	31.67	16.27	4.96
1600	57 (13.9)	46.15	46.15	2.49	42.82	42.82	2.87	39.32	39.32	3.31	35.73	35.73	3.81	32.10	32.10	4.38	28.47	28.47	5.02
	62 (16.7)	46.22	46.22	2.49	42.88	42.88	2.87	39.38	39.38	3.31	35.78	35.78	3.81	32.14	32.14	4.38	28.51	28.51	5.02
	63 (17.2)††	46.15	36.54	2.49	42.39	33.50	2.88	38.45	30.44	3.32	34.43	27.43	3.82	30.42	24.48	4.40	26.50	21.58	5.04
	67 (19.4)	49.93	38.25	2.46	45.88	35.12	2.85	41.67	31.99	3.30	37.38	28.88	3.80	33.10	25.86	4.37	28.89	22.91	5.02
	72 (22.2)	55.12	30.20	2.43	50.68	27.55	2.82	46.06	24.90	3.27	41.37	22.28	3.77	36.68	19.76	4.35	32.02	17.33	5.00
1800	57 (13.9)	47.74	47.74	2.52	44.25	44.25	2.90	40.59	40.59	3.34	36.85	36.85	3.84	33.06	33.06	4.41	29.28	29.28	5.06
	62 (16.7)	47.81	47.81	2.52	44.31	44.31	2.90	40.65	40.65	3.34	36.89	36.89	3.84	33.10	33.10	4.41	29.31	29.31	5.06
	63 (17.2)††	46.86	38.82	2.52	43.01	35.62	2.91	39.00	32.42	3.36	34.92	29.23	3.86	30.87	26.08	4.43	27.11	27.11	5.08
	67 (19.4)	50.65	40.71	2.50	46.52	37.42	2.89	42.22	34.13	3.33	37.86	30.87	3.84	33.53	27.64	4.41	29.37	29.25	5.06
	72 (22.2)	55.85	31.70	2.46	51.29	28.95	2.85	46.57	26.20	3.30	41.79	23.49	3.81	37.00	20.87	4.39	32.26	18.35	5.04

† Total and sensible capacities are net capacities. Blower motor heat has been subtracted.

‡ Sensible capacities shown are based on 80°F (27°C) entering air at the indoor coil. For sensible capacities at other than 80°F (27°C), deduct 835 Btuh (245 kW) per 1000 CFM (480 L/S) of indoor coil air for each degree below 80°F (27°C), or add 835 Btuh (245 kW) per 1000 CFM (480 L/S) of indoor coil air per degree above 80°F (27°C).

Detailed cooling capacities are based on indoor and outdoor unit at the same elevation per AHRI standard 210/240–2008. If additional tubing length and/or indoor unit is located above outdoor unit, a slight variation in capacity may occur.

** System kw is total of indoor and outdoor unit kilowatts.

EWB — Entering Wet Bulb

NOTE: When the required data fall between the published data, interpolation may be performed. Extrapolation is not an acceptable practice.

CONDENSER ONLY RATINGS*

SST °F (°C)		CONDENSER ENTERING AIR TEMPERATURES °F (°C)							
		55 (12.78)	65 (18.33)	75 (23.89)	85 (29.44)	95 (35.0)	105 (40.56)	115 (46.11)	125 (51.67)
24ANB724C31 – High**									
30 (–1.11)	TCG	28.00	25.00	21.90	18.90	16.00	13.30	10.70	8.50
	SDT	71.60	81.50	91.40	101.20	111.00	120.80	130.80	140.90
	KW	1.20	1.30	1.40	1.51	1.63	1.76	1.92	2.11
35 (1.67)	TCG	31.20	27.70	24.30	21.00	17.80	14.80	12.10	9.60
	SDT	73.20	83.00	92.80	102.60	112.40	122.20	132.10	142.10
	KW	1.23	1.33	1.43	1.53	1.65	1.79	1.95	2.14
40 (4.44)	TCG	34.60	30.70	26.90	23.20	19.80	16.50	13.50	10.70
	SDT	74.80	84.60	94.40	104.10	113.90	123.50	133.40	143.30
	KW	1.25	1.35	1.45	1.56	1.68	1.82	1.98	2.17
45 (7.22)	TCG	38.20	33.90	29.70	25.70	21.90	18.30	15.00	12.00
	SDT	76.60	86.30	96.00	105.70	115.20	124.90	134.70	144.60
	KW	1.28	1.38	1.48	1.58	1.70	1.84	2.01	2.20
50 (10.0)	TCG	42.00	37.30	32.60	28.30	24.10	20.20	16.60	13.40
	SDT	78.40	88.00	97.60	107.10	116.70	126.30	136.00	145.90
	KW	1.31	1.40	1.50	1.60	1.72	1.87	2.03	2.23
55 (12.78)	TCG	46.10	40.90	35.80	31.00	26.50	22.30	18.40	14.80
	SDT	80.20	89.70	99.20	108.60	118.10	127.70	137.40	147.10
	KW	1.34	1.43	1.52	1.63	1.75	1.89	2.06	2.26
60 (15.56)	TCG	50.50	44.70	39.20	33.90	29.00	24.40	20.20	16.30
	SDT	82.00	91.40	100.80	110.20	119.70	129.20	138.80	148.40
	KW	1.37	1.45	1.54	1.65	1.77	1.92	2.09	2.28
24ANB724C31 – Low**									
30 (–1.11)	TCG	13.50	13.60	13.30	12.80	12.20	11.30	10.40	9.40
	SDT	66.80	76.80	86.70	96.50	106.30	116.00	125.70	135.70
	KW	0.77	0.89	1.03	1.18	1.35	1.53	1.74	1.96
35 (1.67)	TCG	15.20	15.20	14.90	14.40	13.70	12.90	11.90	10.90
	SDT	68.00	78.00	87.90	97.70	107.40	117.10	126.90	136.90
	KW	0.77	0.89	1.02	1.17	1.34	1.53	1.74	1.98
40 (4.44)	TCG	16.90	16.90	16.60	16.00	15.30	14.50	13.50	12.50
	SDT	69.30	79.30	89.00	98.80	108.50	118.20	128.10	138.10
	KW	0.76	0.88	1.01	1.17	1.34	1.53	1.75	1.99
45 (7.22)	TCG	18.80	18.70	18.30	17.80	17.00	16.20	15.20	14.10
	SDT	70.60	80.50	90.30	100.00	109.70	119.40	129.20	139.20
	KW	0.75	0.87	1.00	1.16	1.33	1.53	1.76	2.01
50 (10.0)	TCG	20.80	20.60	20.20	19.60	18.90	18.00	17.00	15.90
	SDT	72.00	81.80	91.50	101.20	110.80	120.50	130.40	140.30
	KW	0.74	0.86	0.99	1.15	1.33	1.53	1.76	2.02
55 (12.78)	TCG	22.90	22.70	22.20	21.60	20.80	19.90	18.80	17.80
	SDT	73.40	83.20	92.80	102.40	112.10	121.70	131.50	141.40
	KW	0.73	0.84	0.98	1.14	1.32	1.53	1.77	2.03
60 (15.56)	TCG	25.10	24.80	24.30	23.70	22.80	21.90	20.80	19.70
	SDT	74.90	84.60	94.10	103.70	113.30	122.90	132.60	142.40
	KW	0.72	0.83	0.97	1.13	1.32	1.53	1.77	2.04
24ANB736C31 – High**									
30 (–1.11)	TCG	34.80	32.30	29.80	27.40	25.00	22.60	20.10	17.60
	SDT	71.10	80.60	90.10	99.60	109.10	118.50	127.80	137.20
	KW	1.72	1.87	2.04	2.25	2.47	2.72	3.00	3.29
35 (1.67)	TCG	38.50	35.70	33.10	30.40	27.80	25.10	22.40	19.60
	SDT	72.60	82.00	91.50	100.90	110.30	119.70	128.90	138.20
	KW	1.76	1.91	2.08	2.28	2.50	2.76	3.03	3.33
40 (4.44)	TCG	42.40	39.40	36.50	33.60	30.70	27.80	24.80	21.80
	SDT	74.20	83.60	93.00	102.40	111.70	120.90	130.10	139.20
	KW	1.81	1.95	2.11	2.31	2.53	2.79	3.06	3.37
45 (7.22)	TCG	46.50	43.30	40.20	37.00	33.90	30.70	27.50	24.20
	SDT	75.90	85.20	94.50	103.80	113.00	122.20	131.30	140.30
	KW	1.87	1.99	2.15	2.34	2.57	2.82	3.10	3.40
50 (10.0)	TCG	50.90	47.50	44.00	40.60	37.20	33.80	30.30	26.70
	SDT	77.60	86.80	96.10	105.30	114.40	123.50	132.50	141.40
	KW	1.92	2.04	2.19	2.38	2.60	2.85	3.13	3.44
55 (12.78)	TCG	55.50	51.80	48.10	44.50	40.80	37.00	33.20	29.40
	SDT	79.40	88.50	97.70	106.80	115.90	124.90	133.80	142.60
	KW	1.99	2.09	2.24	2.42	2.64	2.89	3.17	3.47
60 (15.56)	TCG	60.40	56.40	52.50	48.50	44.50	40.40	36.40	32.30
	SDT	81.20	90.20	99.30	108.40	117.40	126.30	135.00	143.80
	KW	2.05	2.15	2.29	2.47	2.68	2.93	3.20	3.51

See notes on page 19

CONDENSER ONLY RATINGS* CONTINUED

SST °F (°C)		CONDENSER ENTERING AIR TEMPERATURES °F (°C)							
		55 (12.78)	65 (18.33)	75 (23.89)	85 (29.44)	95 (35.0)	105 (40.56)	115 (46.11)	125 (51.67)
24ANB736C31 – Low**									
30 (–1.11)	TCG	20.70	20.10	19.50	18.80	18.00	16.90	15.60	14.10
	SDT	65.70	75.40	85.10	94.80	104.50	114.10	123.60	133.10
	KW	1.18	1.31	1.47	1.66	1.88	2.13	2.43	2.78
35 (1.67)	TCG	23.10	22.40	21.80	21.00	20.10	19.00	17.60	16.00
	SDT	66.80	76.50	86.10	95.80	105.40	115.00	124.50	134.00
	KW	1.16	1.30	1.46	1.65	1.87	2.12	2.42	2.76
40 (4.44)	TCG	25.60	25.00	24.20	23.40	22.40	21.20	19.80	18.10
	SDT	68.00	77.60	87.30	96.90	106.50	116.00	125.40	134.90
	KW	1.13	1.28	1.45	1.64	1.86	2.11	2.41	2.75
45 (7.22)	TCG	28.40	27.70	26.90	26.00	24.90	23.70	22.10	20.30
	SDT	69.30	78.80	88.40	98.00	107.50	117.00	126.40	135.80
	KW	1.11	1.26	1.43	1.63	1.85	2.10	2.40	2.73
50 (10.0)	TCG	31.40	30.60	29.70	28.70	27.60	26.20	24.60	22.70
	SDT	70.60	80.10	89.60	99.20	108.60	118.00	127.40	136.70
	KW	1.08	1.24	1.42	1.61	1.84	2.09	2.39	2.72
55 (12.78)	TCG	34.60	33.70	32.70	31.70	30.40	29.00	27.30	25.30
	SDT	72.00	81.50	90.90	100.40	109.80	119.10	128.40	137.60
	KW	1.06	1.22	1.40	1.60	1.83	2.08	2.38	2.71
60 (15.56)	TCG	38.10	37.00	36.00	34.80	33.50	31.90	30.10	28.00
	SDT	73.50	82.90	92.30	101.60	111.00	120.20	129.40	138.60
	KW	1.03	1.20	1.38	1.59	1.82	2.07	2.36	2.69
24ANB748C31 – High**									
30 (–1.11)	TCG	44.30	42.30	39.70	36.70	33.50	30.30	27.10	24.20
	SDT	69.60	79.40	88.90	98.30	107.70	117.10	126.50	136.00
	KW	2.00	2.27	2.56	2.88	3.24	3.67	4.16	4.76
35 (1.67)	TCG	49.40	47.10	44.10	40.80	37.30	33.80	30.40	27.20
	SDT	71.20	80.80	90.30	99.60	108.90	118.20	127.60	137.00
	KW	2.04	2.31	2.60	2.91	3.28	3.70	4.21	4.80
40 (4.44)	TCG	54.80	52.00	48.70	45.10	41.30	37.50	33.90	30.40
	SDT	72.80	82.30	91.60	100.90	110.20	119.40	128.70	138.00
	KW	2.08	2.35	2.63	2.95	3.32	3.75	4.25	4.86
45 (7.22)	TCG	60.40	57.20	53.50	49.60	45.50	41.40	37.50	33.80
	SDT	74.40	83.80	93.00	102.20	111.40	120.60	129.80	139.10
	KW	2.12	2.38	2.67	2.99	3.36	3.79	4.31	4.91
50 (10.0)	TCG	66.10	62.60	58.60	54.30	49.90	45.50	41.40	37.40
	SDT	76.00	85.30	94.50	103.60	112.70	121.80	131.00	140.20
	KW	2.15	2.41	2.70	3.02	3.40	3.84	4.36	4.98
55 (12.78)	TCG	72.10	68.10	63.80	59.10	54.40	49.80	45.30	41.10
	SDT	77.60	86.80	95.90	105.00	114.00	123.10	132.10	141.30
	KW	2.18	2.44	2.73	3.06	3.44	3.89	4.42	5.04
60 (15.56)	TCG	78.20	73.80	69.10	64.10	59.10	54.20	49.50	44.90
	SDT	79.30	88.40	97.40	106.40	115.40	124.30	133.30	142.30
	KW	2.20	2.46	2.76	3.09	3.48	3.94	4.48	5.11
24ANB748C31 – Low**									
30 (–1.11)	TCG	27.10	26.70	25.90	24.60	23.00	21.00	18.70	16.20
	SDT	65.00	74.70	84.40	93.90	103.40	112.80	122.20	131.50
	KW	1.44	1.66	1.90	2.18	2.49	2.84	3.25	3.71
35 (1.67)	TCG	30.20	29.70	28.80	27.50	25.90	23.80	21.50	18.80
	SDT	66.00	75.70	85.30	94.80	104.30	113.70	123.10	132.40
	KW	1.41	1.64	1.88	2.16	2.47	2.83	3.23	3.69
40 (4.44)	TCG	33.50	33.00	32.10	30.70	29.00	26.90	24.40	21.70
	SDT	67.10	76.80	86.30	95.80	105.30	114.60	124.00	133.30
	KW	1.38	1.61	1.86	2.14	2.45	2.81	3.22	3.68
45 (7.22)	TCG	37.00	36.50	35.60	34.20	32.40	30.20	27.70	24.80
	SDT	68.30	77.90	87.40	96.90	106.30	115.60	124.90	134.10
	KW	1.35	1.58	1.84	2.12	2.44	2.79	3.20	3.66
50 (10.0)	TCG	40.90	40.30	39.40	37.90	36.10	33.80	31.20	28.20
	SDT	69.50	79.10	88.60	98.00	107.40	116.60	125.80	135.00
	KW	1.32	1.56	1.81	2.10	2.42	2.78	3.18	3.64
55 (12.78)	TCG	45.00	44.50	43.50	42.00	40.10	37.80	35.00	31.90
	SDT	70.90	80.40	89.80	99.20	108.50	117.70	126.90	136.00
	KW	1.29	1.53	1.79	2.08	2.40	2.76	3.16	3.62
60 (15.56)	TCG	49.60	49.00	47.90	46.40	44.40	42.00	39.20	35.90
	SDT	72.30	81.80	91.10	100.40	109.70	118.80	127.90	137.00
	KW	1.26	1.50	1.77	2.06	2.38	2.74	3.15	3.60

See notes on page 19

CONDENSER ONLY RATINGS* CONTINUED

SST °F (°C)		CONDENSER ENTERING AIR TEMPERATURES °F (°C)							
		55 (12.78)	65 (18.33)	75 (23.89)	85 (29.44)	95 (35.0)	105 (40.56)	115 (46.11)	125 (51.67)
24ANB760C31 – High**									
30 (–1.11)	TCG	48.30	46.50	44.80	42.90	40.90	38.60	36.00	32.90
	SDT	72.70	81.80	91.10	100.50	109.90	119.20	128.50	137.70
	KW	2.40	2.67	2.98	3.33	3.74	4.20	4.73	5.32
35 (1.67)	TCG	53.20	51.30	49.50	47.50	45.30	42.80	40.00	36.70
	SDT	74.30	83.40	92.60	101.90	111.20	120.40	129.60	138.80
	KW	2.46	2.72	3.03	3.38	3.79	4.26	4.79	5.39
40 (4.44)	TCG	58.60	56.50	54.50	52.40	50.00	47.40	44.30	40.80
	SDT	76.00	85.00	94.20	103.40	112.60	121.70	130.80	139.90
	KW	2.52	2.78	3.08	3.44	3.85	4.32	4.86	5.47
45 (7.22)	TCG	64.30	62.10	59.90	57.60	55.10	52.20	48.90	45.20
	SDT	77.80	86.70	95.80	104.90	114.00	123.10	132.10	141.10
	KW	2.58	2.84	3.14	3.50	3.91	4.38	4.92	5.54
50 (10.0)	TCG	70.50	68.10	65.80	63.20	60.50	57.40	53.80	49.80
	SDT	79.70	88.60	97.50	106.50	115.50	124.50	133.40	142.20
	KW	2.66	2.91	3.21	3.56	3.97	4.45	4.99	5.61
55 (12.78)	TCG	77.10	74.60	72.00	69.30	66.30	62.90	59.10	54.80
	SDT	81.80	90.50	99.40	108.30	117.10	126.00	134.80	143.50
	KW	2.74	2.98	3.28	3.63	4.04	4.52	5.07	5.69
60 (15.56)	TCG	84.10	81.40	78.60	75.70	72.40	68.80	64.70	60.10
	SDT	84.00	92.60	101.30	110.00	118.80	127.50	136.10	144.70
	KW	2.82	3.06	3.35	3.71	4.12	4.60	5.15	5.77
24ANB760C31 – Low**									
30 (–1.11)	TCG	31.20	31.30	30.60	29.30	27.40	25.10	22.40	19.30
	SDT	66.60	76.30	85.90	95.30	104.70	113.90	123.10	132.30
	KW	1.31	1.68	2.12	2.66	3.29	4.03	4.91	5.94
35 (1.67)	TCG	35.00	34.90	34.20	32.90	31.00	28.60	25.80	22.60
	SDT	67.80	77.50	87.10	96.50	105.70	115.00	124.10	133.30
	KW	1.29	1.66	2.11	2.65	3.28	4.03	4.91	5.94
40 (4.44)	TCG	38.90	38.90	38.10	36.70	34.80	32.30	29.40	26.10
	SDT	69.20	78.80	88.30	97.60	106.90	116.00	125.10	134.30
	KW	1.27	1.65	2.10	2.63	3.27	4.02	4.90	5.94
45 (7.22)	TCG	43.20	43.10	42.30	40.80	38.80	36.30	33.30	29.90
	SDT	70.60	80.20	89.50	98.80	108.00	117.10	126.20	135.20
	KW	1.26	1.63	2.08	2.62	3.26	4.01	4.90	5.93
50 (10.0)	TCG	47.80	47.60	46.70	45.20	43.10	40.50	37.40	33.90
	SDT	72.10	81.50	90.80	100.00	109.20	118.20	127.20	136.30
	KW	1.24	1.61	2.06	2.60	3.24	4.00	4.89	5.93
55 (12.78)	TCG	52.60	52.30	51.40	49.80	47.70	45.00	41.80	38.20
	SDT	73.60	83.00	92.20	101.30	110.40	119.40	128.40	137.30
	KW	1.21	1.59	2.04	2.58	3.22	3.98	4.87	5.92
60 (15.56)	TCG	57.70	57.40	56.40	54.80	52.50	49.70	46.40	42.70
	SDT	75.20	84.40	93.60	102.60	111.70	120.60	129.50	138.40
	KW	1.19	1.56	2.01	2.56	3.20	3.96	4.86	5.90

* AHRI listing applies only to systems shown in Combination Ratings table.
KW – Outdoor Unit Kilowatts Only.
SDT – Saturated Temperature Leaving Compressor (°F)
SST – Saturated Temperature Entering Compressor (°F/°C)
TCG – Gross Cooling Capacity (1000 Btuh)

GUIDE SPECIFICATIONS
GENERAL

System Description

Outdoor-mounted, air-cooled, split-system air conditioner unit suitable for ground or rooftop installation. Unit consists of a hermetic compressor, an air-cooled coil, propeller-type condenser fan, and a control box. Unit will discharge supply air upward as shown on contract drawings. Unit will be used in a refrigeration circuit to match up to a packaged fan coil or coil unit.

Quality Assurance

— Unit will be rated in accordance with the latest edition of AHRI Standard 210.

— Unit will be certified for capacity and efficiency, and listed in the latest AHRI directory.

— Unit construction will comply with latest edition of ANSI/ ASHRAE and with NEC.

— Unit will be constructed in accordance with UL standards and will carry the UL label of approval. Unit will have c-UL approval.

— Unit cabinet will be capable of withstanding Federal Test Method Standard No. 141 (Method 6061) 500-hr salt spray test.

— Air-cooled condenser coils will be leak tested and pressure tested.

— Unit constructed in ISO9001 approved facility.

Delivery, Storage, and Handling

— Unit will be shipped as single package only and is stored and handled per unit manufacturer's recommendations.

Warranty (for inclusion by specifying engineer)

— U.S. and Canada only.

PRODUCTS

Equipment

— Factory assembled, single piece, air-cooled air conditioner unit. Contained within the unit enclosure is all factory wiring, piping, controls, compressor, refrigerant charge Puron® (R-410A), and special features required prior to field start-up.

Unit Cabinet

— Unit cabinet, including louvered coil guard, will be constructed of galvanized steel, bonderized, and coated with a powder coat paint to both sides of the sheet metal for enhanced sea coast corrosion resistance.

Fans

— Condenser fan will be direct-drive propeller type, discharging air upward.

— Condenser fan motors will be totally enclosed, 1-phase type with class B insulation and permanently lubricated bearings. Shafts will be corrosion resistant.

— Fan blades will be statically and dynamically balanced.

— Condenser fan openings will be equipped with coated steel wire safety guards.

Compressor

— Compressor will be hermetically sealed.

— Compressor will be mounted on rubber vibration isolators.

Condenser Coil

— Condenser coil will be air cooled.

— Coil will be constructed of aluminum fins with epoxy phenolic thermoset coating specially designed to resist coastal corrosion. Fins are mechanically bonded to copper tubes which are then cleaned, dehydrated, and sealed.

— ArmorPlate coating - Aluminum fin material is pre-coated on both sides with a corrosion protective epoxy phenolic coating.

Refrigeration Components

— Refrigeration circuit components will include liquid-line shutoff valve with sweat connections, vapor-line shutoff valve with sweat connections, system charge of Puron® (R-410A) refrigerant, and compressor oil.

— Unit will be equipped with high-pressure switch, low pressure switch and filter drier for Puron refrigerant.

Operating Characteristics

— The capacity of the unit will meet or exceed _____ Btuh at a suction temperature of _____ °F/°C. The power consumption at full load will not exceed _____ kW.

— Combination of the unit and the evaporator or fan coil unit will have a total net cooling capacity of _____ Btuh or greater at conditions of _____ CFM entering air temperature at the evaporator at _____ °F/°C wet bulb and _____ °F/°C dry bulb, and air entering the unit at _____ °F/°C.

— The system will have a SEER of _____ Btuh/watt or greater at DOE conditions.

Electrical Requirements

— Nominal unit electrical characteristics will be _____ v, single phase, 60 hz. The unit will be capable of satisfactory operation within voltage limits of _____ v to _____ v.

— Unit electrical power will be single point connection.

— Control circuit will be 24v.

Special Features

— Refer to section of this literature identifying accessories and descriptions for specific features and available enhancements.

SYSTEM DESIGN SUMMARY

1. Intended for outdoor installation with free air inlet and outlet. Outdoor fan external static pressure available is less than 0.01-in. wc.
2. Minimum outdoor operating air temperature without low-ambient operation accessory is 55°F (12.8°C).
3. The maximum outdoor operating ambient in cooling mode is 125°F (51.67°C) when operating voltage is 230v. For 208v applications, the maximum outdoor ambient is 120°F (48.9°C).
4. For reliable operation, unit should be level in all horizontal planes.
5. For interconnecting refrigerant tube lengths greater than 80 ft (23.4 m) and/or elevation differences between indoor and outdoor units greater than 20 ft (6.1 m), consult Residential Piping and Longline Guideline and Service Manual available from equipment distributor.
6. If any refrigerant tubing is buried, provide a 6 in. (152.4 mm) vertical rise to the valve connections at the unit. Refrigerant tubing lengths up to 36 in. (914.4 mm) may be buried without further consideration. Do not bury refrigerant lines longer than 36 in. (914.4 mm).
7. Use only copper wire for electric connection at unit. Aluminum and clad aluminum are not acceptable for the type of connector provided.
8. Do not apply capillary tube indoor coils to these units.
9. Factory-supplied filter drier must be installed.

Copyright 2013 Carrier Corp. • 7310 W. Morris St. • Indianapolis, IN 46231

Edition Date: 04/13

Catalog No. 24ANB7C–4PD

Manufacturer reserves the right to change, at any time, specifications and designs without notice and without obligations.

Replaces: 24ANB7C–3PD