25HBC3
Base 13 Heat Pump with Puron® Refrigerant 1–1/2 to 5 Nominal Tons

Carrier
turn to the experts

Product Data

Puron™
the environmentally sound refrigerant

Carrier heat pumps with Puron® refrigerant provide a collection of features unmatched by any other family of equipment. The 25HBC has been designed utilizing Carrier's Puron refrigerant. The environmentally sound refrigerant allows consumers to make a responsible decision in the protection of the earth's ozone layer.

As an Energy Star® Partner, Carrier Corporation has determined that this product meets the Energy Star® guidelines for energy efficiency. Refer to the combination ratings in the Product Data for system combinations that meet Energy Star® guidelines.

NOTE: Ratings contained in this document are subject to change at any time. Always refer to the AHRI directory (www.ahridirectory.org) for the most up-to-date ratings information.

INDUSTRY LEADING FEATURES / BENEFITS

Efficiency

- 13 SEER/ 10.5 - 12.5 EER/ 7.7 - 8.2 HSPF
- Microtube Technology™ refrigeration system
- Indoor air quality accessories available

Sound

- Sound level as low as 72 dBA
- Sound levels as low as 72 dBA with accessory sound blanket

Comfort

- System supports Edge® Thermidistat™ or standard thermostat controls

Reliability

- Puron® refrigerant - environmentally sound, won't deplete the ozone layer and low lifetime service cost.
- Scroll compressor
- Internal pressure relief valve
- Internal thermal overload
- High pressure switch
- Loss of charge switch
- Filter drier
- Balanced refrigeration system for maximum reliability

Durability

WeatherArmor™ protection package:

- Solid, durable sheet metal construction
- Dense wire coil guard available
  (3-phase units come standard with dense wire coil guard)
- Baked-on powder paint

Applications

- Long-line - up to 250 feet (76.20 m) total equivalent length, up to 200 feet (60.96 m) condenser above evaporator, or up to 80 ft. (24.38 m) evaporator above condenser (See Longline Guide for more information.)
- Low ambient (down to -20°F/-28.9°C) with accessory kit

MODEL NUMBER NOMENCLATURE

1	2	3	4	5	6	7	8	9	10	11	12	13
N	N	A	A	A/N	N	N	N	A/N	A/N	A/N	N	N
2	5	H	B	C	3	3	6	A	0	0	3	0
Product Series		Product Family	Tier	Major Series	SEER	Cooling Capacity		Grille Variations	Open	Open	Voltage	Minor Series
25 = HP		H = RES HP	B=Base	C = Puron	3=13 SEER			A=Dense Grille W=Wide Grille	0=Not Defined	0=Not Defined	3=208/230–1 5=208/230–3 6=460/3	0, 1, 2...

Puron™
the environmentally sound refrigerant

AHRI CERTIFIED™ www.ahridirectory.org

Use of the AHRI Certified TM Mark indicates a manufacturer's participation in the program For verification of certification for individual products, go to www.ahridirectory.org.

ISO 9001:2000 QMI REGISTERED

c UL US

ENERGY STAR

This product has been designed and manufactured to meet Energy Star® criteria for energy efficiency when matched with appropriate coil components. However, proper refrigerant charge and proper air flow are critical to achieve rated capacity and efficiency. Installation of this product should follow all manufacturing refrigerant charging and air flow instructions. **Failure to confirm proper charge and air flow may reduce energy efficiency and shorten equipment life.**

STANDARD FEATURES

Feature	18	24	30	36	42	48	60
Puron Refrigerant	X	X	X	X	X	X	X
Maximum SEER Rating	14.5	14.5	14.0	14.5	15.0	14.5	14.0
Scroll Compressor	X	X	X	X	X	X	X
Field Installed Filter Drier	X	X	X	X	X	X	X
Front Seating Service Valves	X	X	X	X	X	X	X
Internal Pressure Relief Valve	X	X	X	X	X	X	X
Internal Thermal Overload	X	X	X	X	X	X	X
Long Line capability	X	X	X	X	X	X	X
Low Ambient capability with Kit	X	X	X	X	X	X	X
Suction Line Accumulator	X	X	X	X	X	X	X
High Pressure Switch	X	X	X	X	X	X	X
Loss of Charge Switch	X	X	X	X	X	X	X

X = Standard

PHYSICAL DATA

UNIT SIZE SERIES	18–30	24–30	30–30, 50	36–30, 50, 60	42–30, 50	48–30, 50, 60	60–30, 50, 60
Operating Weight lb (kg)	127 (57.6)	133 (60.3)	146 (66.2)	152 (69.0)	193 (87.5)	216 (98.0)	250 (113.4)
Shipping Weight lb (kg)	153 (69.4)	158 (77.6)	180 (81.6)	178 (80.7)	229 (103.8)	251 (113.8)	282 (127.9)
Compressor Type	Scroll						
REFRIGERANT	Puron (R–410A)						
Indoor Control	Piston 52	Piston 57	Piston 67	Piston 70	Piston 76	Piston 80	TXV (Puron Hard Shutoff)
Outdoor Heating Piston #	40	46	55	57	65	65	76
Charge lb (kg)	5.16 (2.34)	5.95 (2.70)	6.40 (2.90)	6.34 (2.88)	8.88 (4.03)	10.41 (4.72)	11.00 (4.99)
COND FAN	Propeller Type, Direct Drive						
Air Discharge	Vertical						
Air Qty (CFM)	1881	2196	3167	3167	2614	3365	4046
Motor HP	1/12	1/10	1/5	1/5	1/10	1/4	1/4
Motor RPM	1100	1100	1100	1100	1100	1100	800
COND COIL							
Face Area (Sq ft)	11.49	13.13	15.09	17.25	15.09	19.40	17.60
Fins per In.	25	25	20	20	20	20	20
Rows	1	1	1	1	2	2	2
Circuits	4	4	5	5	6	8	8
VALVE CONNECT. (In.) ID							
Vapor	5/8	5/8	3/4	3/4	7/8	7/8	7/8
Liquid	3/8						
REFRIGERANT TUBES* (In.) OD							
Rated Vapor*	5/8	5/8	3/4	3/4	7/8	7/8	1–1/8
Liquid	3/8”						

*Units are rated with 25 ft (7.6 m) of lineset length. See *Vapor Line Sizing and Cooling Capacity Loss* table when using other sizes and lengths of lineset.

Note: See unit Installation Instruction for proper installation.

VAPOR LINE SIZING AND COOLING CAPACITY LOSS

Acceptable vapor line diameters provide adequate oil return to the compressor while avoiding excessive capacity loss. The suction line diameters shown in the chart below are acceptable for HP systems with Puron refrigerant:

Vapor Line Sizing and Cooling Capacity Losses - Puron® Refrigerant 1- Stage Heat Pump Applications

Unit Nominal Size (Btuh)	Maximum Liquid Line Diameters (In. OD)	Vapor Line Diameters (In.) OD	Cooling Capacity Loss (%) Total Equivalent Line Length ft. (m)								
			Standard Application		Long Line Application Requires Accessories						
			26–50 (7.9–15.2)	51–80 (15.5–24.4)	81–100 (24.7–30.5)	101–125 (30.8–38.1)	126–150 (38.4–45.7)	151–175 (46.0–50.3)	176–200 (53.6–60.0)	201–225 (61.3–68.6)	226–250 (68.9–76.2)
18,000 1–Stage HP with Puron	3/8	1/2	1	2	3	4	6	7	8	9	10
		5/8	0	0	1	1	1	2	2	3	3
24,000 1–Stage HP with Puron	3/8	5/8	0	1	1	2	3	3	4	4	5
		3/4	0	0	0	0	1	1	1	1	1
30,000 1–Stage HP with Puron	3/8	5/8	1	2	3	3	4	5	6	7	8
		3/4	0	0	1	1	1	2	2	2	3
		7/8	0	0	0	0	1	1	1	1	1
36,000 1–Stage HP with Puron	3/8	5/8	1	2	4	5	6	7	9	10	11
		3/4	0	0	1	1	2	2	3	3	4
		7/8	0	0	0	0	1	1	1	1	2
42,000 1–Stage HP with Puron	3/8	3/4	0	1	2	2	3	4	4	5	6
		7/8	0	0	1	1	1	2	2	2	3
48,000 1–Stage HP with Puron	3/8	3/4	0	1	2	3	4	5	5	6	7
		7/8	0	0	1	1	2	2	2	3	3
60,000 1–Stage HP with Puron	3/8	3/4	1	2	4	5	6	7	9	10	11
		7/8	0	1	2	2	3	4	4	5	5
		1–1/8	0	0	0	1	1	1	1	1	1

Standard Length = 80 ft. (24.4 m) or less total equivalent length

Applications in this area are long line. Accessories are required as shown recommended on Long Line Application Guidelines

Applications in this area may have height restrictions that limit allowable total equivalent length, when outdoor unit is below indoor unit See Long Line Application Guidelines

REFRIGERANT PIPING LENGTH LIMITATIONS

Maximum Line Lengths:

The maximum allowable total equivalent length for heat pumps varies depending on the vertical separation. See the tables below for allowable lengths depending on whether the outdoor unit is on the same level, above or below the outdoor unit.

Maximum Line Lengths for Heat Pump Applications

	MAXIMUM ACTUAL LENGTH ft (m)	MAXIMUM EQUIVALENT LENGTH† ft (m)	MAXIMUM VERTICAL SEPARATION ft (m)
Units on equal level	200 (61)	250 (76.2)	N/A
Outdoor unit ABOVE indoor unit	200 (61)	250 (76.2)	200 (61)
Outdoor unit BELOW indoor unit	See Table *'Maximum Total Equivalent Length: Outdoor Unit BELOW Indoor Unit'*		

† Total equivalent length accounts for losses due to elbows or fitting. See the Long Line Guideline for details.

25HBC3

Maximum Total Equivalent Length† - Outdoor Unit BELOW Indoor Unit

Size	Liquid Line Diameter w/ TXV	HP with Puron® Refrigerant – Maximum Total Equivalent Length† Vertical Separation ft (m) Outdoor unit BELOW indoor unit;						
		0–20 (0 – 6.1)	21–30 (6.4 – 9.1)	31–40 (9.4 – 12.2)	41–50 (12.5 – 15.2)	51–60 (15.5 – 18.3)	61–70 (18.6 – 21.3)	71–80 (21.6 – 24.4)
18000 HP with Puron	3/8	250*	250*	250*	250*	250*	250*	250*
24000 HP with Puron	3/8	250*	250*	250*	250*	250*	250*	250*
30000 HP with Puron	3/8	250*	250*	250*	250*	250*	250*	250*
36000 HP with Puron	3/8	250*	250*	250*	250*	250*	250*	250*
42000 HP with Puron	3/8	250*	250*	250*	250*	250*	250*	150
48000 HP with Puron	3/8	250*	250*	250*	250*	230	160	– –
60000 HP with Puron	3/8	250*	225*	190	150	110	– –	– –

*** Maximum actual length not to exceed 200 ft (61 m)**

† Total equivalent length accounts for losses due to elbows or fitting. See the Long Line Guideline for details.

– – = outside acceptable range

LONG LINE APPLICATIONS

An application is considered Long Line when the refrigerant level in the system requires the use of accessories to maintain acceptable refrigerant management for systems reliability. Defining a system as long line depends on the liquid line diameter, actual length of the tubing, and vertical separation between the indoor and outdoor units.

For Heat Pump systems, the chart below shows when an application is considered Long Line. Beyond these lengths, long line accessories are required:

HP WITH PURON® REFRIGERANT LONG LINE DESCRIPTION ft (m)
Beyond these lengths, long line accessories are required

Liquid Line Size	Units On Same Level	Outdoor Below Indoor	Outdoor Above Indoor
3/8	80 (24.4)	20 (6.1) vertical or 80 (24.4) total	80 (24.4)

Note: See Long Line Guideline for details

ACCESSORIES

ORDER NUMBER	DESCRIPTION	18–30	24–30	30–30	30–50	36–30	36–50	36–60	42–30	42–50	48–30	48–50	48–60	60–30, 50	60– 60
HC32GE234	BALL BEARING MOTOR	X													
HC34GE239	BALL BEARING MOTOR		X												
HC36GE219	BALL BEARING MOTOR			X	X	X	X								
HC34GE240	BALL BEARING MOTOR								X	X					
HC38GE232	BALL BEARING MOTOR														
HC38GE461	BALL BEARING MOTOR							X							
HC38GE228	BALL BEARING MOTOR														
HC40GE226	BALL BEARING MOTOR										X	X			
HC40GE466	BALL BEARING MOTOR												X		
HC40GE228	BALL BEARING MOTOR													X	
HC40GE467	BALL BEARING MOTOR														X
KAACH1701AAA	CRANKCASE HTR	X	X	X		X									
KAACH1601AAA	CRANKCASE HTR								X						
STANDARD	CRANKCASE HTR				S		S	S		S	S	S	S	S	S
KSACY0101AAA	CYCLE PROTECTOR	X	X	X	X	X	X	X	X	X	X	X	X	X	X
KAAFT0101AAA	FREEZE THERMOSTAT	X	X	X	X	X	X	X	X	X	X	X	X	X	X
KSAHS1701AAA	HARD START	X	X	X	X	X	X	X	X	X	X	X	X	X	X
KHAIR0101AAA	ISOLATION RELAY	X	X	X	X	X	X	X	X	X	X	X	X	X	X
KSALA0301410	LOW AMBIENT PSW	X	X	X	X	X	X	X	X	X	X	X	X	X	X
KSALA0601AAA†	MOTORMASTER 230V	X	X	X	X	X	X	X	X	X	X	X	X	X	X
KHAOT0201SEC	OUTDOOR THERMOSTAT	X	X	X	X	X	X	X	X	X	X	X	X	X	X
KHAOT0301FST	OUTDOOR THERMOSTAT	X	X	X	X	X	X	X	X	X	X	X	X	X	X
KHALS0401LLS	SOLENOID VALVE	X	X	X	X	X	X	X	X	X	X	X	X	X	X
KHASS0606MPK*	SNOW STAND RACK		X	X	X	X	X	X	X	X	X	X	X	X	X
KSASH0601COP	SOUND BLKT	X	X	X	X	X	X	X	X	X	X	X	X		
KSASH2101COP	SOUND BLKT													X	X
KAACS0201PTC	START ASSIST PTC	X	X	X	X	X	X	X	X	X	X	X	X	X	X
KSASF0101AAA	SUPPORT FEET	X	X	X	X	X	X	X	X	X	X	X	X	X	X
KAATD0101TDR	TIME DELAY RELAY	X	X	X	X	X	X	X	X	X	X	X	X	X	X
KSATX0201PUR	TXV PURON HSO	X	X	X	X										
KSATX0301PUR	TXV PURON HSO					X	X	X	X	X					
KSATX0401PUR	TXV PURON HSO										X	X	X		
KSATX0501PUR	TXV PURON HSO													X	X

x = Accessory S = Standard

* Available through RCD

† Required accessories include ball bearing fan motor, compressor start assist (CAP / Relay), crankcase heater, evaporator freeze stat, isolation relay, hard shut–off TXV or liquid line solenoid valve.

ACCESSORY THERMOSTATS

THERMOSTAT / SUBBASE PKG.	DESCRIPTION
TP–PRH01–A	Programmable Thermidistat
TP–NRH01–A	Non–programmable Thermidistat
TP–PHP01	Performance Series Programmable HP Stat
TP–NHP01	Performance Series Non–programmable HP Stat
TC–PHP01	Comfort Series Programmable HP Stat
TC–NHP01	Comfort Series Non–programmable HP Stat
TB–PHP01	Base Series Programmable HP Stat
TB–NHP01	Base Series Non–programmable HP Stat
TSTATXXSEN01–B*	Outdoor Air Temperature Sensor
TSTATXXNBP01	Backplate for Non–Programmable Thermostat
TSTATXXPBP01	Backplate for Programmable Thermostat and Thermidistat™ Control
TSTATXXSBP01	Backplate for Standard Programmable Thermostat
TSTATXXBBP01	Backplate for Builder's Thermostat
TSTATXXCNV10†	Thermostat Conversion Kit (4 to 5 Wire) — 10 Pack

* Outdoor temperature sensor is an accessory for all Carrier electronic thermostats, except the non–programmable air conditioner version and builders thermostats. It allows the temperature at a remote location (outdoors) to be displayed on the thermostat. The outdoor air temperature sensor must be used with the HybridHeat™ (dual fuel) thermostat.

† Thermostat conversion kit is a 24–vac accessory that can turn a 4–wire thermostat application into a 5–wire application. This kit can also be used to replace a broken thermostat wire, or add an extra wire when needed.

The outdoor air temperature sensor is included with the Thermidistat Control and HybridHeat™ (dual fuel) thermostat.

ACCESSORY USAGE GUIDELINE

Accessory	REQUIRED FOR LOW–AMBIENT COOLING APPLICATIONS (Below 55°F / 12.8°C)	REQUIRED FOR LONG LINE APPLICATIONS*	REQUIRED FOR SEA COAST APPLICATIONS (Within 2 miles / 3.22 km)
Accumulator	Standard	Standard	Standard
Ball Bearing Fan Motor	Yes†	No	No
Compressor Start Assist Capacitor and Relay	Yes	Yes	No
Crankcase Heater	Yes	Yes	No
Evaporator Freeze Thermostat	Yes	No	No
Hard Shutoff TXV	Yes	Yes	Yes
Isolation Relay	Yes	No	No
Liquid Line Solenoid Valve	No	See Long–Line Application Guideline	No
Motor Master® Control or Low Ambient Switch	Yes	No	No
Support Feet	Recommended	No	Recommended

* For tubing line sets between 80 and 200 ft. (24.38 and 60.96 m) and/or 20 ft. (6.09 m) vertical differential, refer to Residential Split–System Longline Application Guideline.

† Additional requirement for Low–Ambient Controller (full modulation feature) MotorMaster® Control.

Accessory Description and Usage (Listed Alphabetically)

1. Ball-Bearing Fan Motor

A fan motor with ball bearings which permits speed reduction while maintaining bearing lubrication.

Usage Guideline:

Required on all units when using MotorMaster®

2. Compressor Start Assist - Capacitor and Relay

Start capacitor and relay gives a ”hard” boost to compressor motor at each start up.

Usage Guideline:

Required for reciprocating compressors in the following applications:

Long line

Low ambient cooling

Hard shut off expansion valve on indoor coil

Liquid line solenoid on indoor coil

Required for single-phase scroll compressors in the following applications:

Long line

Low ambient cooling

Suggested for all compressors in areas with a history of low voltage problems.

3. Compressor Start Assist — PTC Type

Solid state electrical device which gives a ”soft” boost to the compressor at each start-up.

Usage Guideline:

Suggested in installations with marginal power supply.

4. Crankcase Heater

An electric resistance heater which mounts to the base of the compressor to keep the lubricant warm during off cycles. Improves compressor lubrication on restart and minimizes the chance of liquid slugging.

Usage Guideline:

Required in low ambient cooling applications.

Required in long line applications.

Suggested in all commercial applications.

5. Evaporator Freeze Thermostat

An SPST temperature-actuated switch that stops unit operation when evaporator reaches freeze-up conditions.

Usage Guideline:

Required when low ambient kit has been added.

6. Isolation Relay

An SPDT relay which switches the low-ambient controller out of the outdoor fan motor circuit when the heat pump switches to heating mode.

Usage Guideline:

Required in all heat pumps where low ambient kit has been added.

7. Liquid-Line Solenoid Valve (LLS)

An electrically operated shutoff valve which stops and starts refrigerant liquid flow in response to compressor operation. It is to be installed at the outdoor unit to control refrigerant off cycle migration in the heating mode.

Usage Guideline:

An LLS is required in all long line heat pump applications to control refrigerant off cycle migration in the heating mode. See Long Line Guideline.

8. Low-Ambient Pressure Switch Kit

A long life pressure switch which is mounted to outdoor unit service valve. It is designed to cycle the outdoor fan motor in order to maintain head pressure within normal operating limits. The control will maintain working head pressure at low-ambient temperatures down to 0°F (-18°C) when properly installed.

Usage Guideline:

A Low-Ambient Pressure Switch or MotorMaster® Low-Ambient Controller must be used when cooling operation is used at outdoor temperatures below 55°F (12.8°C).

9. MotorMaster® Low-Ambient Controller

A fan-speed control device activated by a temperature sensor, designed to control condenser fan motor speed in response to the saturated, condensing temperature during operation in cooling mode only. For outdoor temperatures down to -20°F (-28.9°C), it maintains condensing temperature at 100°F ±10°F (37.8°C ± 6.5°C).

Usage Guideline:

A MotorMaster® Low Ambient Controller or Low-Ambient Pressure Switch must be used when cooling operation is used at outdoor temperatures below 55°F (12.8°C).

Suggested for all commercial applications.

10. Outdoor Air Temperature Sensor

Designed for use with Carrier Thermostats listed in this publication. This device enables the thermostat to display the outdoor temperature. This device also is required to enable special thermostat features such as auxiliary heat lock out.

Usage Guideline:

Suggested for all Carrier thermostats listed in this publication.

11. Outdoor Thermostat

An SPDT temperature-actuated switch which turns on supplemental electric heaters when outdoor air temperature drops below a user-selected set point.

Usage Guideline:

Electric supplemental heat applications in non-variable speed indoor units when electric heat staging is desired.

12. Secondary Outdoor Thermostat

An SPDT temperature-actuated switch which turns on third-stage of supplemental electric heaters when outdoor air temperature drops below the second-stage set point.

Usage Guideline:

Outdoor thermostat applications where electric heater is capable of 3-stage operation.

13. Snow Stand Rack

Coated wire rack which supports unit 18 in. (457.2 mm) above mounting pad to allow for drainage from unit base.

Usage Guideline:

Suggested in the following applications:

Heat pump installations in heavy snowfall areas.

Heat pump installations in snow drift locations.

Heat pump installations in areas of prolonged subfreezing temperatures.

All commercial installations.

14. Sound Hood

Wraparound sound reducing cover for the compressor. Reduces the sound level by about 2 dBA.

Usage Guideline:

Suggested when unit is installed closer than 15 ft. (4.577 m) to quiet areas, bedrooms, etc.

Suggested when unit is installed between two houses less than 10 ft. (3.05 m) apart.

15. Thermostatic Expansion Valve (TXV) Bi-Flow

A modulating flow-control valve which meters refrigerant liquid flow rate into the evaporator in response to the superheat of the refrigerant gas leaving the evaporator.

Usage Guideline:

Accessory required to meet AHRI rating and system reliability, where indoor not equipped.

Required in all heat pump applications designed with Puron refrigerant.

16. Time-Delay Relay

An SPST delay relay which briefly continues operation of indoor blower motor to provide additional cooling after the compressor cycles off.

Note: Most indoor unit controls include this feature. For those that do not, use the guideline below.

Usage Guideline:

Accessory required to meet AHRI rating, where indoor not equipped.

ELECTRICAL DATA

UNIT SIZE	V/PH	OPER VOLTS*		COMPR		FAN	MCA	MIN WIRE SIZE†	MIN WIRE SIZE†	MAX LENGTH ft (m)‡	MAX LENGTH ft (m)‡	MAX FUSE** or CKT BRK AMPS
		MAX	MIN	LRA	RLA	FLA		60° C	75° C	60° C	75° C	
18–30	208/230/1	253	197	48.0	9.0	0.5	11.8	14	14	66 (20.1)	62 (18.9)	20
24–30				58.3	12.8	0.5	16.8	14	14	47 (14.3)	45 (13.7)	25
30–30				77.0	16.0	1.1	21.1	12	12	58 (17.7)	56 (17.1)	30
36–30				79.0	16.7	1.1	22.0	12	12	57 (17.4)	54 (16.5)	35
42–30				109.0	19.9	0.8	25.7	10	10	77 (23.5)	73 (22.3)	40
48–30				117.0	21.8	1.4	28.7	8	8	107 (32.6)	102 (31.1)	50
60–30				134.0	26.3	1.2	34.1	8	8	91 (27.7)	87 (26.5)	50
30–50	208/230/3	253	197	71.0	10.0	1.1	13.6	14	14	66 (20.1)	62 (18.9)	20
36–50				73.0	10.4	1.1	14.1	14	14	59 (18.0)	56 (17.1)	20
42–50				83.1	13.6	0.8	17.8	14	14	50 (15.2)	48 (14.6)	30
48–50				83.1	13.7	1.4	18.5	14	14	49 (14.9)	46 (14.0)	30
60–50				110.0	15.9	1.2	21.1	12	12	68 (20.7)	65 (19.8)	30
36–60	460/3	253	197	38.0	5.8	0.6	7.9	14	14	227 (69.2)	216 (65.8)	10
48–60				41.0	6.2	1.2	9.0	14	14	202 (61.6)	192 (58.5)	10
60–60				52.0	7.8	0.6	10.4	14	14	175 (53.3)	166 (50.6)	15

* Permissible limits of the voltage range at which the unit will operate satisfactorily

† If wire is applied at ambient greater than 30°C, consult table 310–16 of the NEC (NFPA 70). The ampacity of non–metallic–sheathed cable (NM), trade name ROMEX, shall be that of 60°C conditions, per the NEC (NFPA 70) Article 336–26. If other than uncoated (no–plated), 60 or 75°C insulation, copper wire (solid wire for 10 AWG or smaller, stranded wire for larger than 10 AWG) is used, consult applicable tables of the NEC (NFPA 70).

‡ Length shown is as measured 1 way along wire path between unit and service panel for voltage drop not to exceed 2%.

** Time–Delay fuse.

FLA – Full Load Amps

LRA – Locked Rotor Amps

MCA – Minimum Circuit Amps

RLA – Rated Load Amps

NOTE: Control circuit is 24–V on all units and requires external power source. Copper wire must be used from service disconnect to unit.

All motors/compressors contain internal overload protection.

Complies with 2007 requirements of ASHRAE Standards 90.1

A-WEIGHTED SOUND POWER

UNIT SIZE	STANDARD RATING (dBA)	TYPICAL OCTAVE BAND SPECTRUM (dBA, without tone adjustment)						
		125	250	500	1000	2000	4000	8000
18–30	72	49.0	58.0	66.5	67.5	64.0	60.0	54.0
24–30	73	53.5	62.5	66.5	67.5	65.0	61.0	56.0
30–30,50	76	54.5	65.5	70.0	70.0	69.0	67.0	59.5
36–30,50,60	75	54.0	64.5	69.0	70.0	68.0	65.5	60.0
42–30,50	78	61.0	67.5	72.5	73.5	71.0	67.5	62.0
48–30,50,60	78	60.0	66.0	72.0	74.0	69.5	65.0	59.0
60–30,50,60	77	55.0	63.0	67.5	71.5	68.0	64.0	60.5

NOTE: Tested in accordance with AHRI Standard 270–08 (not listed in AHRI).

A-WEIGHTED SOUND POWER WITH SOUND HOOD

UNIT SIZE	STANDARD RATING (dBA)	TYPICAL OCTAVE BAND SPECTRUM (dBA, without tone adjustment)						
		125	250	500	1000	2000	4000	8000
18–30	72	50.0	59.0	65.5	66.0	63.5	60.0	53.5
24–30	72	53.5	62.0	66.0	67.0	64.5	60.5	54.5
30–30,50	75	55.5	65.0	69.5	70.0	68.0	66.0	59.5
36–30,50,60	75	54.5	64.0	69.0	69.0	67.5	65.0	59.5
42–30,50	78	60.5	68.0	72.5	73.0	71.0	67.5	61.5
48–30,50,60	78	61.0	65.5	72.5	73.5	70.0	65.0	58.5
60–30,50,60	74	55.0	63.5	67.0	69.0	66.5	62.0	57.0

NOTE: Tested in accordance with AHRI Standard 270–08 (not listed in AHRI).

CHARGING SUBCOOLING (TXV-TYPE EXPANSION DEVICE)

UNIT SIZE–SERIES	REQUIRED SUBCOOLING °F (°C)
18–30	12 (6.7)
24–30	12 (6.7)
30–30, 50	10 (5.6)
36–30, 50, 60	10 (5.6)
42–30, 50	10 (5.6)
48–30, 50, 60	10 (5.6)
60–30, 50, 60	12 (6.7)

DIMENSIONS - ENGLISH

UNIT	SERIES	ELECTRICAL CHARACTERISTICS				A	B	C	D	E	F	G	K	L	M	N	P	OPERATING WEIGHT (lbs)	SHIPPING WEIGHT (lbs)	SHIPPING DIMENSIONS (L x W x H)
25HBC318	0	X	O	O	O	25 3/4"	25 5/16"	3 3/4"	5/8"	4 7/16"	21 1/4"	9 1/8"	2 13/16"	1/2"	13 3/4"	14"	12 1/2"	127	153	26 7/8" X 30 1/16" X 32 9/16"
25HBC324	0	X	O	O	O	25 3/4"	32 5/16"	3 3/4"	5/8"	4 7/16"	21 1/4"	9 1/8"	2 13/16"	1/2"	13"	12 3/4"	13"	133	158	26 7/8" X 30 1/16" X 35 15/16"
25HBC330	0	X	O	X	O	31 3/16"	25 5/16"	3 3/4"	3/4"	6 9/16"	24 11/16"	9 1/8"	2 13/16"	1/2"	15 1/2"	14 3/4"	12 1/2"	146	180	32 3/8" X 35 1/2" X 32 9/16"
25HBC336	0	X	O	X	X	31 3/16"	32 5/16"	3 3/4"	3/4"	6 9/16"	24 11/16"	9 1/8"	2 13/16"	1/2"	15"	15 1/2"	14"	152	178	32 3/8" X 35 1/2" X 35 15/16"
25HBC342	0	X	O	X	O	31 3/16"	25 5/16"	3 7/8"	7/8"	6 9/16"	24 11/16"	9 1/8"	2 15/16"	5/8"	15 1/2"	15 3/4"	12 1/2"	193	229	32 3/8" X 35 1/2" X 32 9/16"
25HBC348	0	X	O	X	X	31 3/16"	35 3/4"	3 7/8"	7/8"	6 9/16"	24 11/16"	9 1/8"	2 15/16"	5/8"	15 3/4"	16 1/4"	15"	216	251	32 3/8" X 35 1/2" X 39 3/8"
25HBC360	0	X	O	X	X	35"	28 15/16"	3 7/8"	7/8"	6 9/16"	28 7/16"	9 1/8"	2 15/16"	5/8"	17"	16"	12"	250	282	32 3/8" X 35 1/2" X 32 9/16"

208-230-1-60	230-1-60	208/230-3-60	460-3-60

X = YES
O = NO

NOTES:

1. ALLOW 30" CLEARANCE TO SERVICE SIDE OF UNIT, 48" ABOVE UNIT, 6" ON ONE SIDE, 12" ON REMAINING SIDE, AND 24" BETWEEN UNITS FOR PROPER AIRFLOW.
2. MINIMUM OUTDOOR OPERATING AMBIENT IN COOLING MODE IS 55°F, MAX. 125°F.
3. SERIES DESIGNATION IS THE 13TH POSITION OF THE UNIT MODEL NUMBER.
4. CENTER OF GRAVITY ⊕.
5. ALL DIMENSIONS ARE IN "INCHES" UNLESS NOTED.

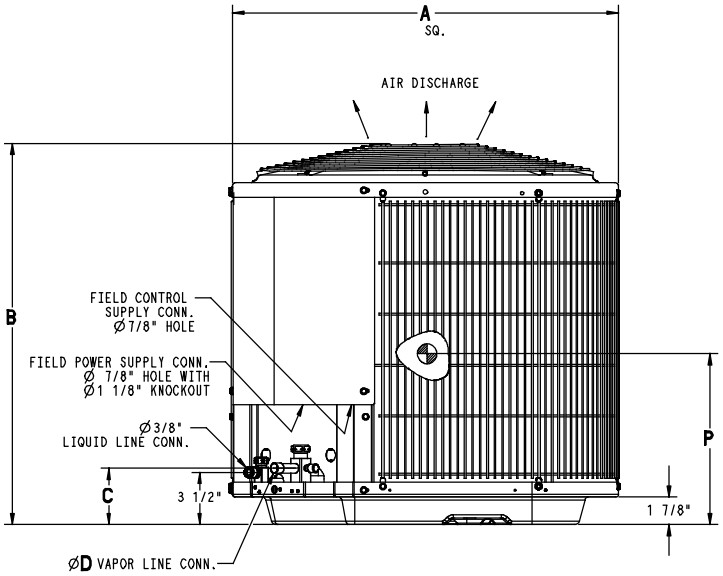

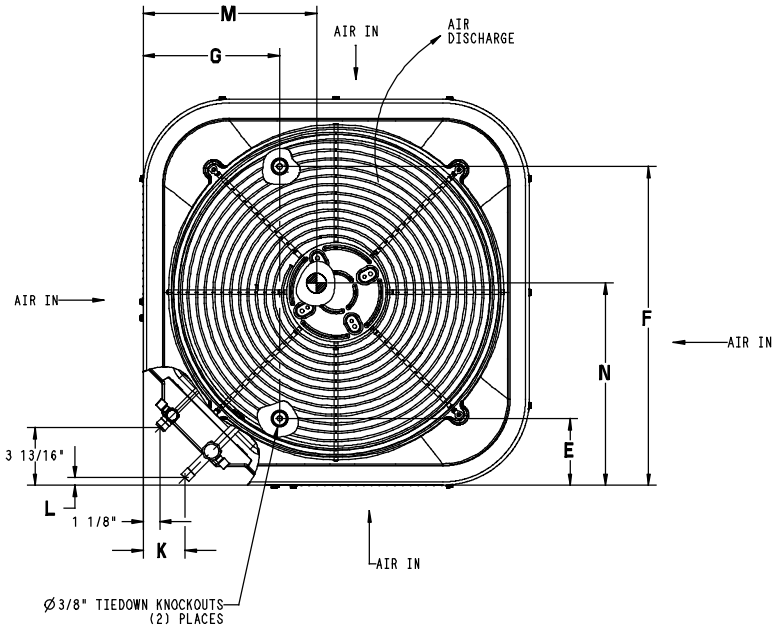

UNIT SIZE	MINIMUM MOUNTING PAD DIMENSIONS
18,24	26" X 26"
30,36,42,48	31 1/2" X 31 1/2"
60	35" X 35"

DIMENSIONS - SI

UNIT	SERIES	ELECTRICAL CHARACTERISTICS				A	B	C	D	E	F	G	K	L	M	N	P	OPERATING WEIGHT (Kgs)	SHIPPING WEIGHT (Kgs)	SHIPPING DIMENSIONS (L x W x H)
25HBC318	0	X	O	O	O	654.0	643.0	95.2	15.9	112.7	539.8	231.8	71.4	12.7	349.3	355.6	317.5	57.6	69.4	682.8 X 762.8 X 826.8
25HBC324	0	X	O	O	O	654.0	820.8	95.2	15.9	112.7	539.8	231.8	71.4	12.7	330.2	323.9	330.2	60.3	71.6	682.8 X 762.8 X 913.2
25HBC330	0	X	O	X	O	792.2	643.0	95.2	19.0	166.7	627.1	231.8	71.4	12.7	393.7	374.7	317.5	66.2	81.6	821.2 X 901.2 X 826.8
25HBC336	0	X	O	X	X	792.2	820.8	95.2	19.0	166.7	627.1	231.8	71.4	12.7	381.0	393.7	355.6	69.0	80.7	821.2 X 901.2 X 913.2
25HBC342	0	X	O	X	O	792.2	643.0	98.4	22.2	166.7	627.1	231.8	74.6	15.9	393.7	400.1	317.5	87.5	103.8	821.2 X 901.2 X 826.8
25HBC348	0	X	O	X	X	792.2	908.0	98.4	22.2	166.7	627.1	231.8	74.6	15.9	400.1	412.8	381.0	98.0	113.8	821.2 X 901.2 X 1000.1
25HBC360	0	X	O	X	X	889.0	735.0	98.4	22.2	166.7	722.3	231.8	74.6	15.9	431.8	406.4	304.8	113.4	127.9	917.6 X 998.6 X 827.1

208-230-1-60	230-1-60	208/230-3-60	460-3-60

X = YES
O = NO

NOTES:

1. ALLOW 762.0 CLEARANCE TO SERVICE SIDE OF UNIT, 1219.2 ABOVE UNIT, 152.4 ON ONE SIDE, 304.8 ON REMAINING SIDE, AND 609.6 BETWEEN UNITS FOR PROPER AIRFLOW.
2. MINIMUM OUTDOOR OPERATING AMBIENT IN COOLING MODE IS 13°C, MAX. 52°C.
3. SERIES DESIGNATION IS THE 13TH POSITION OF THE UNIT MODEL NUMBER.
4. CENTER OF GRAVITY ⊕.
5. ALL DIMENSIONS ARE IN "MM" UNLESS NOTED.

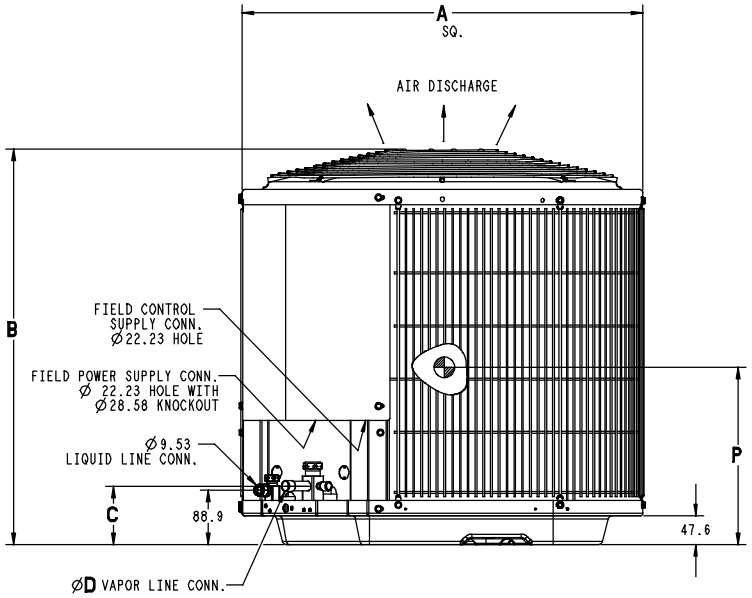

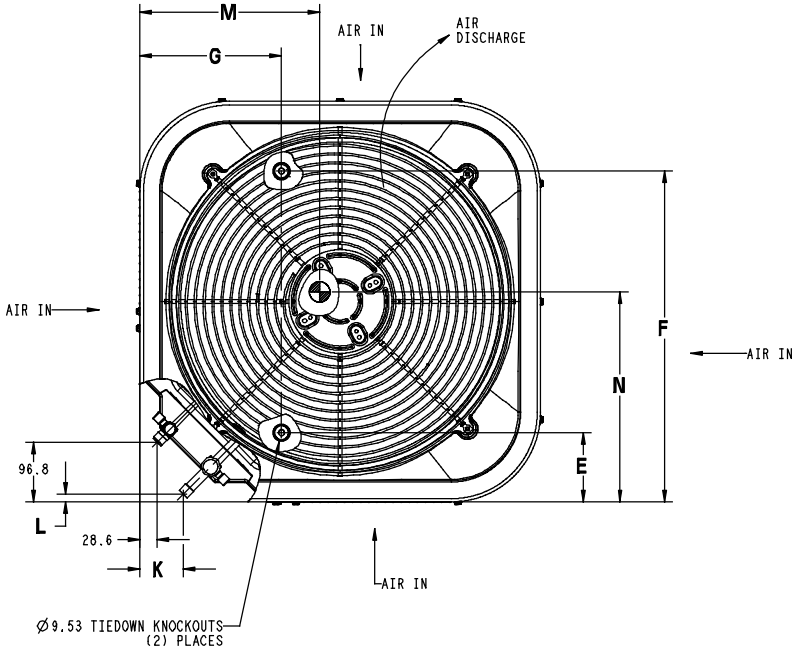

UNIT SIZE	MINIMUM MOUNTING PAD DIMENSIONS
18,24	660.4 X 660.4
30,36,42,48	800.1 X 800.1
60	889.0 X 889.0

25HBC3 BALANCE POINT WORKSHEET

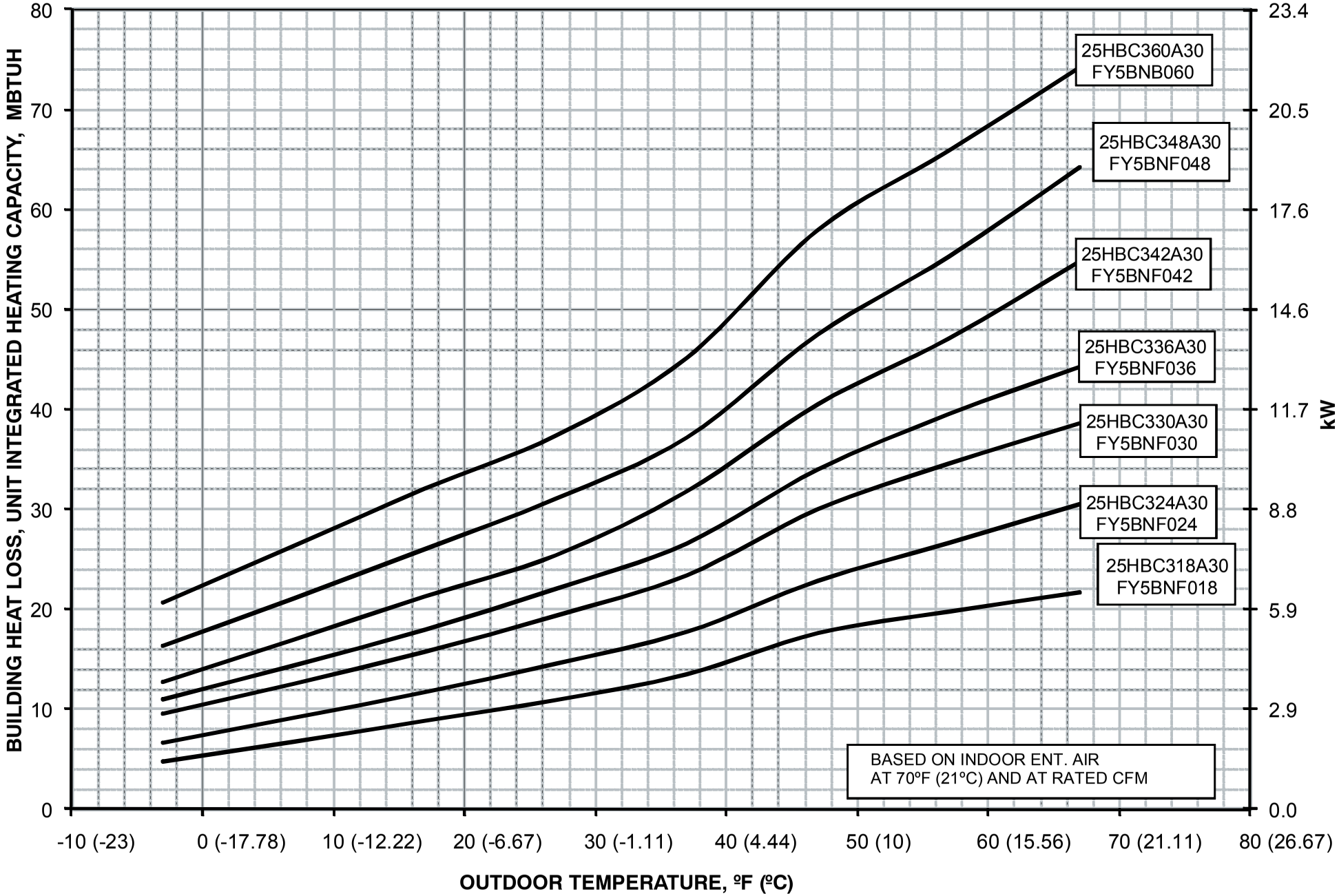

CLEARANCES

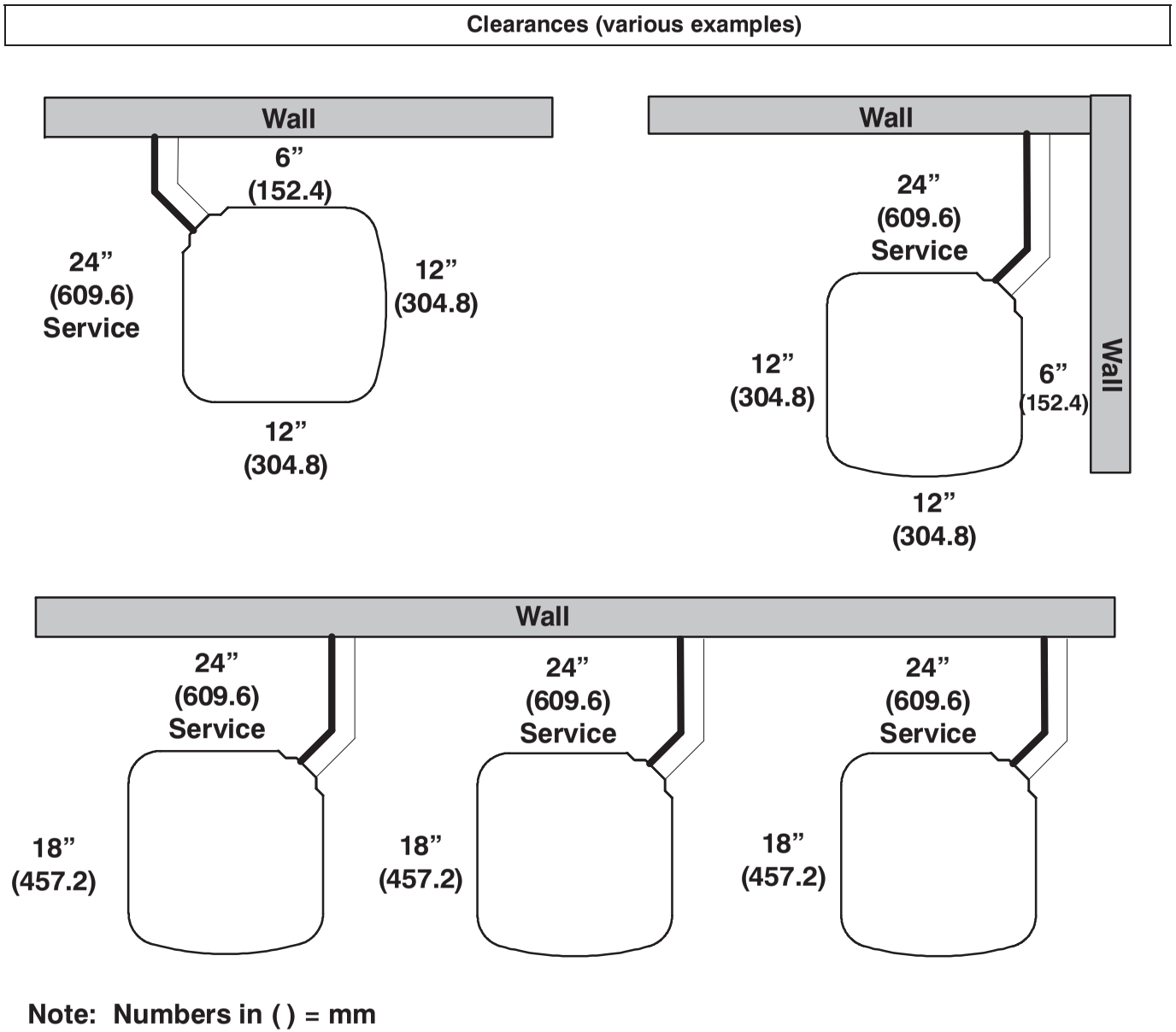

Note: Numbers in ( ) = mm

IMPORTANT: When installing multiple units in an alcove, roof well, or partially enclosed area, ensure there is adequate ventilation to prevent re-circulation of discharge air.

COMBINATION RATINGS

AHRI Ref. No.	Model Number	Coil Model Number	Furnace Model Number	Cooling Capacity	EER	SEER	High Temp		HSPF	Low Temp	
							E Capacity	E COP		H Capacity	H COP
3699492	25HBC318(A,W)**30	†FY5BNF018		17,400	11.0	13.0	17,600	3.60	7.7	10,800	2.38
3699493	25HBC318(A,W)**30	FB4CNF018		17,400	11.0	13.0	17,400	3.72	7.7	10,500	2.44
3698297	25HBC318(A,W)**30	FB4CNF018+TXV		17,400	11.5	14.0	17,400	3.72	7.7	10,500	2.44
3699494	25HBC318(A,W)**30	FB4CNF024		17,400	11.0	13.2	17,400	3.72	7.7	10,500	2.44
3698298	25HBC318(A,W)**30	FB4CNF024+TXV		17,400	11.5	14.0	17,400	3.72	7.7	10,500	2.44
3698288	25HBC318(A,W)**30	FE4ANF002+UI		17,600	11.5	14.5	17,000	3.82	8.0	10,300	2.50
3698289	25HBC318(A,W)**30	FF1ENP019		17,200	11.5	14.0	17,200	3.70	7.8	10,500	2.44
3698290	25HBC318(A,W)**30	FF1ENP024		17,200	11.0	13.0	17,600	3.54	7.7	11,000	2.32
3698291	25HBC318(A,W)**30	FF1ENP025		17,600	12.0	14.5	17,200	3.82	8.0	10,500	2.50
3698292	25HBC318(A,W)**30	FF1ENP031		17,600	11.5	14.0	17,000	3.76	7.8	10,600	2.46
3698293	25HBC318(A,W)**30	FV4BNF002		17,600	11.5	14.5	17,000	3.82	8.0	10,300	2.50
3698294	25HBC318(A,W)**30	FV4CNF002		17,600	11.5	14.5	17,000	3.82	8.0	10,300	2.50
3698295	25HBC318(A,W)**30	FX4CNF018		17,200	11.5	14.0	17,200	3.72	7.8	10,500	2.44
3698296	25HBC318(A,W)**30	FX4CNF024		17,400	11.5	14.0	17,200	3.78	7.8	10,500	2.48
3698287	25HBC318(A,W)**30	FX4DN(B,F)031		17,600	11.5	14.0	17,000	3.76	7.8	10,700	2.48
3698285	25HBC318(A,W)**30	FX4DNF019		17,800	11.5	14.0	17,200	3.86	8.0	10,500	2.52
3698286	25HBC318(A,W)**30	FX4DNF025		17,800	11.5	14.0	17,000	3.86	8.0	10,500	2.50
3698299	25HBC318(A,W)**30	FY5BNF018+TXV		17,400	11.0	13.5	17,600	3.60	7.7	10,800	2.38
3699495	25HBC318(A,W)**30	FY5BNF024		17,400	11.0	13.0	17,200	3.62	7.7	10,800	2.38
3698300	25HBC318(A,W)**30	FY5BNF024+TXV		17,400	11.0	13.5	17,200	3.62	7.7	10,800	2.38
3698237	25HBC318(A,W)**30	CAP**1814A**	58CV(A,X)070–12	17,000	11.5	14.0	17,000	3.54	7.7	10,200	2.38
3698238	25HBC318(A,W)**30	CAP**1814A**	58PH*045–08	17,200	11.5	14.0	17,200	3.62	7.7	10,400	2.42
3698240	25HBC318(A,W)**30	CAP**2414A**	58CV(A,X)070–12	17,400	11.5	14.0	17,000	3.66	7.7	10,300	2.44
3698241	25HBC318(A,W)**30	CAP**2414A**	58PH*045–08	17,600	11.5	14.0	17,400	3.80	7.8	10,500	2.48
3698239	25HBC318(A,W)**30	CAP**2414A**+TDR		17,400	11.0	13.0	17,600	3.58	7.7	11,000	2.34
3698244	25HBC318(A,W)**30	CAP**2417A**	58CV(A,X)090–16	17,200	11.5	14.0	17,200	3.70	7.7	10,300	2.46
3698246	25HBC318(A,W)**30	CAP**2417A**	58ME(B,C)060–12	17,600	11.5	14.0	17,400	3.86	8.0	10,400	2.52
3698245	25HBC318(A,W)**30	CAP**2417A**	58MEB040–12	17,800	12.0	14.5	17,400	3.96	8.2	10,500	2.56
3698243	25HBC318(A,W)**30	CAP**2417A**	58MV(B,C)060–14	17,200	11.5	14.0	17,200	3.68	7.7	10,300	2.44
3699414	25HBC318(A,W)**30	CAP**2417A**	58UVB060–14	17,200	11.5	14.0	17,200	3.68	7.7	10,300	2.44
3698302	25HBC318(A,W)**30	CAP**2417A**	58VLR105–12	17,400	11.5	14.0	17,200	3.86	8.0	10,500	2.52
3698301	25HBC318(A,W)**30	CAP**2417A**	58VMR105–12	17,400	11.5	14.0	17,200	3.72	7.8	10,300	2.46
3698242	25HBC318(A,W)**30	CAP**2417A**+TDR		17,200	11.0	13.0	17,800	3.58	7.7	11,000	2.34
3698273	25HBC318(A,W)**30	CNPF*2418A**+TDR		17,400	11.0	13.0	17,800	3.62	7.7	11,000	2.36
3698266	25HBC318(A,W)**30	CNPH*2417A**	58CV(A,X)070–12	17,400	11.5	14.0	17,200	3.70	7.8	10,300	2.44
3698267	25HBC318(A,W)**30	CNPH*2417A**	58CV(A,X)090–16	17,400	11.5	14.0	17,200	3.72	7.8	10,300	2.46
3698271	25HBC318(A,W)**30	CNPH*2417A**	58HDV040––12	17,800	11.5	14.0	17,800	3.90	8.0	10,900	2.50
3698272	25HBC318(A,W)**30	CNPH*2417A**	58HDV060––12	17,800	11.5	14.0	17,800	3.90	8.0	10,800	2.50
3698270	25HBC318(A,W)**30	CNPH*2417A**	58ME(B,C)060–12	17,400	11.5	14.0	17,200	3.82	8.0	10,400	2.50
3698269	25HBC318(A,W)**30	CNPH*2417A**	58MEB040–12	17,800	11.5	14.0	17,400	3.90	8.0	10,500	2.54
3698264	25HBC318(A,W)**30	CNPH*2417A**	58MV(B,C)060–14	17,400	11.5	14.0	17,200	3.72	7.8	10,300	2.46
3698265	25HBC318(A,W)**30	CNPH*2417A**	58MV(B,C)080–14	17,000	11.5	14.0	17,000	3.70	7.8	10,300	2.44
3698263	25HBC318(A,W)**30	CNPH*2417A**	58MVB040–14	17,400	11.5	14.0	17,200	3.72	7.8	10,300	2.44
3698268	25HBC318(A,W)**30	CNPH*2417A**	58PH*045–08	17,600	11.5	14.0	17,200	3.80	8.0	10,500	2.48
3698308	25HBC318(A,W)**30	CNPH*2417A**	58VLR105–12	17,400	11.5	14.0	17,200	3.90	8.0	10,500	2.52
3698307	25HBC318(A,W)**30	CNPH*2417A**	58VMR105–12	17,400	11.5	14.0	17,200	3.76	7.8	10,400	2.46
3698262	25HBC318(A,W)**30	CNPH*2417A**+TDR		17,400	11.0	13.0	17,800	3.62	7.7	11,000	2.36
3698247	25HBC318(A,W)**30	CNPV*1814A**	58CV(A,X)070–12	17,200	11.5	14.0	17,200	3.64	7.7	10,300	2.42
3698248	25HBC318(A,W)**30	CNPV*1814A**	58PH*045–08	17,400	11.5	14.0	17,200	3.70	7.7	10,400	2.44
3698251	25HBC318(A,W)**30	CNPV*1917A**	58CV(A,X)090–16	17,400	11.5	14.0	17,200	3.78	7.8	10,300	2.48
3698253	25HBC318(A,W)**30	CNPV*1917A**	58ME(B,C)060–12	17,800	12.0	14.5	17,400	3.98	8.2	10,500	2.56
3698252	25HBC318(A,W)**30	CNPV*1917A**	58MEB040–12	17,800	12.0	14.5	17,400	4.06	8.2	10,600	2.58
3698250	25HBC318(A,W)**30	CNPV*1917A**	58MV(B,C)060–14	17,400	11.5	14.0	17,200	3.76	7.8	10,300	2.48
3699415	25HBC318(A,W)**30	CNPV*1917A**	58UVB060–14	17,400	11.5	14.0	17,200	3.76	7.8	10,300	2.48
3698304	25HBC318(A,W)**30	CNPV*1917A**	58VLR105–12	17,400	12.0	14.5	17,200	3.98	8.2	10,500	2.54
3698303	25HBC318(A,W)**30	CNPV*1917A**	58VMR105–12	17,400	11.5	14.0	17,200	3.82	7.8	10,400	2.50
3698249	25HBC318(A,W)**30	CNPV*1917A**+TDR		17,400	11.0	13.0	17,800	3.66	7.7	11,100	2.36
3698255	25HBC318(A,W)**30	CNPV*2414A**	58CV(A,X)070–12	17,400	11.5	14.0	17,200	3.70	7.7	10,300	2.44
3698256	25HBC318(A,W)**30	CNPV*2414A**	58PH*045–08	17,400	11.5	14.0	17,200	3.80	8.0	10,500	2.48
3698254	25HBC318(A,W)**30	CNPV*2414A**+TDR		17,400	11.0	13.0	17,600	3.62	7.7	11,000	2.36
3698259	25HBC318(A,W)**30	CNPV*2417A**	58CV(A,X)090–16	17,400	11.5	14.0	17,200	3.72	7.7	10,300	2.46
3698261	25HBC318(A,W)**30	CNPV*2417A**	58ME(B,C)060–12	17,400	11.5	14.0	17,200	3.82	7.8	10,400	2.50
3698260	25HBC318(A,W)**30	CNPV*2417A**	58MEB040–12	17,800	11.5	14.0	17,400	3.90	8.0	10,500	2.54
3698258	25HBC318(A,W)**30	CNPV*2417A**	58MV(B,C)060–14	17,400	11.5	14.0	17,200	3.72	7.7	10,300	2.46
3699416	25HBC318(A,W)**30	CNPV*2417A**	58UVB060–14	17,400	11.5	14.0	17,200	3.72	7.7	10,300	2.46
3698306	25HBC318(A,W)**30	CNPV*2417A**	58VLR105–12	17,400	11.5	14.0	17,200	3.90	8.0	10,500	2.52
3698305	25HBC318(A,W)**30	CNPV*2417A**	58VMR105–12	17,400	11.5	14.0	17,200	3.76	7.8	10,400	2.46
3698257	25HBC318(A,W)**30	CNPV*2417A**+TDR		17,400	11.0	13.0	17,800	3.62	7.7	11,000	2.36
3698278	25HBC318(A,W)**30	CSPH*2412A**	58CV(A,X)070–12	17,400	11.5	14.0	17,200	3.70	7.8	10,300	2.44
3698279	25HBC318(A,W)**30	CSPH*2412A**	58CV(A,X)090–16	17,400	11.5	14.0	17,200	3.72	7.8	10,400	2.46
3698283	25HBC318(A,W)**30	CSPH*2412A**	58HDV040––12	17,800	11.5	14.0	17,400	3.86	8.0	10,800	2.50
3698284	25HBC318(A,W)**30	CSPH*2412A**	58HDV060––12	17,800	11.5	14.0	17,400	3.86	8.0	10,800	2.50
3698282	25HBC318(A,W)**30	CSPH*2412A**	58ME(B,C)060–12	17,800	11.5	14.0	17,000	3.76	7.8	10,300	2.48
3698281	25HBC318(A,W)**30	CSPH*2412A**	58MEB040–12	17,800	11.5	14.0	17,200	3.86	7.8	10,500	2.52
3698276	25HBC318(A,W)**30	CSPH*2412A**	58MV(B,C)060–14	17,400	11.5	14.0	17,200	3.72	7.8	10,300	2.44
3698277	25HBC318(A,W)**30	CSPH*2412A**	58MV(B,C)080–14	17,400	11.5	14.0	17,000	3.70	7.8	10,300	2.44
3698275	25HBC318(A,W)**30	CSPH*2412A**	58MVB040–14	17,400	11.5	14.0	17,200	3.72	7.8	10,400	2.44
3698280	25HBC318(A,W)**30	CSPH*2412A**	58PH*045–08	17,600	11.5	14.0	17,200	3.78	7.8	10,500	2.48
3698310	25HBC318(A,W)**30	CSPH*2412A**	58VLR105–12	17,400	11.5	14.0	17,200	3.90	8.0	10,500	2.52
3698309	25HBC318(A,W)**30	CSPH*2412A**	58VMR105–12	17,400	11.5	14.0	17,200	3.76	7.8	10,400	2.46
3698274	25HBC318(A,W)**30	CSPH*2412A**+TDR		17,400	11.0	13.0	17,800	3.62	7.7	11,000	2.36
3699484	25HBC324(A,W)**30	†FY5BNF024		23,000	11.0	13.0	22,800	3.60	7.7	13,700	2.40
3699485	25HBC324(A,W)**30	FB4CNF024		23,000	11.0	13.0	22,600	3.58	7.7	13,600	2.38
3698450	25HBC324(A,W)**30	FB4CNF024+TXV		23,000	11.0	13.2	22,600	3.58	7.7	13,600	2.38
3699486	25HBC324(A,W)**30	FB4CNF030		23,000	11.5	13.2	22,400	3.74	7.8	13,600	2.46
3698451	25HBC324(A,W)**30	FB4CNF030+TXV		23,000	11.5	13.5	22,400	3.72	7.8	13,600	2.46

See notes on page 45

COMBINATION RATINGS CONTINUED

AHRI Ref. No.	Model Number	Coil Model Number	Furnace Model Number	Cooling Capacity	EER	SEER	High Temp		HSPF	Low Temp	
							E Capacity	E COP		H Capacity	H COP
3698440	25HBC324(A,W)**30	FE4AN(B,F)003+UI		23,000	11.5	14.0	22,000	3.72	8.0	13,200	2.48
3698439	25HBC324(A,W)**30	FE4ANF002+UI		23,000	11.5	14.0	22,200	3.72	8.0	13,300	2.46
3698441	25HBC324(A,W)**30	FF1ENP025		23,000	11.0	13.2	22,600	3.66	8.0	13,600	2.42
3698442	25HBC324(A,W)**30	FF1ENP031		23,000	11.5	13.5	22,600	3.64	8.0	13,700	2.42
3698443	25HBC324(A,W)**30	FF1ENP037		23,200	11.5	13.5	22,600	3.74	8.0	13,700	2.46
3698445	25HBC324(A,W)**30	FV4BN(B,F)003		23,000	11.5	14.0	22,000	3.72	8.0	13,200	2.48
3698444	25HBC324(A,W)**30	FV4BNF002		23,000	11.5	14.0	22,200	3.72	8.0	13,300	2.46
3698447	25HBC324(A,W)**30	FV4CN(B,F)003		23,000	11.5	14.0	22,000	3.72	8.0	13,200	2.48
3698446	25HBC324(A,W)**30	FV4CNF002		23,000	11.5	14.0	22,200	3.72	8.0	13,300	2.46
3698448	25HBC324(A,W)**30	FX4CNF024		22,800	11.0	13.2	22,400	3.64	8.0	13,600	2.42
3698449	25HBC324(A,W)**30	FX4CNF030		23,000	11.5	13.5	22,400	3.74	8.0	13,600	2.48
3698437	25HBC324(A,W)**30	FX4DN(B,F)031		23,000	11.5	13.5	22,600	3.74	8.0	13,800	2.46
3698438	25HBC324(A,W)**30	FX4DN(B,F)037		23,200	11.5	14.0	22,000	3.88	8.0	13,700	2.54
3698436	25HBC324(A,W)**30	FX4DNF025		23,200	11.5	14.0	22,600	3.72	8.0	13,600	2.46
3698452	25HBC324(A,W)**30	FY5BNF024+TXV		23,000	11.0	13.2	22,800	3.60	7.7	13,800	2.40
3698453	25HBC324(A,W)**30	FY5BNF030+TXV		22,800	11.0	13.2	22,600	3.66	7.8	13,900	2.40
3698311	25HBC324(A,W)**30	CAP**2414A**	58CV(A,X)070–12	22,800	11.0	13.5	22,000	3.58	7.7	13,200	2.40
3698312	25HBC324(A,W)**30	CAP**2414A**	58PH*045–08	23,000	11.0	13.5	22,400	3.64	7.8	13,400	2.42
3698314	25HBC324(A,W)**30	CAP**2417A**	58CV(A,X)090–16	22,800	11.5	14.0	22,000	3.62	8.0	13,200	2.42
3698316	25HBC324(A,W)**30	CAP**2417A**	58ME(B,C)060–12	23,000	11.5	14.0	22,400	3.76	8.0	13,500	2.48
3698317	25HBC324(A,W)**30	CAP**2417A**	58ME(B,C)080–12	23,000	11.5	14.0	22,400	3.74	8.0	13,400	2.48
3698315	25HBC324(A,W)**30	CAP**2417A**	58MEB040–12	23,000	11.5	14.0	22,400	3.76	8.0	13,400	2.48
3698313	25HBC324(A,W)**30	CAP**2417A**	58MV(B,C)060–14	23,000	11.5	14.0	22,200	3.70	8.0	13,400	2.46
3699417	25HBC324(A,W)**30	CAP**2417A**	58UVB060–14	23,000	11.5	14.0	22,200	3.70	8.0	13,400	2.46
3698455	25HBC324(A,W)**30	CAP**2417A**	58VLR105–12	22,800	11.5	13.5	22,000	3.68	8.0	13,300	2.44
3698454	25HBC324(A,W)**30	CAP**2417A**	58VMR105–12	22,800	11.5	13.5	22,000	3.60	7.8	13,200	2.40
3698318	25HBC324(A,W)**30	CAP**3014A**	58CV(A,X)070–12	22,800	11.0	13.5	22,000	3.60	8.0	13,300	2.42
3698319	25HBC324(A,W)**30	CAP**3014A**	58PH*045–08	23,000	11.0	13.5	22,400	3.68	8.0	13,500	2.44
3698321	25HBC324(A,W)**30	CAP**3017A**	58CV(A,X)090–16	22,800	11.5	14.0	22,000	3.66	8.0	13,200	2.44
3698323	25HBC324(A,W)**30	CAP**3017A**	58ME(B,C)060–12	23,000	11.5	14.0	22,400	3.82	8.0	13,600	2.52
3698324	25HBC324(A,W)**30	CAP**3017A**	58ME(B,C)080–12	23,000	11.5	14.0	22,400	3.78	8.0	13,500	2.50
3698322	25HBC324(A,W)**30	CAP**3017A**	58MEB040–12	23,000	11.5	14.0	22,400	3.82	8.0	13,500	2.52
3698320	25HBC324(A,W)**30	CAP**3017A**	58MV(B,C)060–14	23,000	11.5	14.0	22,200	3.72	8.0	13,400	2.48
3699418	25HBC324(A,W)**30	CAP**3017A**	58UVB060–14	23,000	11.5	14.0	22,200	3.72	8.0	13,400	2.48
3698457	25HBC324(A,W)**30	CAP**3017A**	58VLR105–12	22,800	11.5	13.5	22,000	3.70	8.0	13,400	2.46
3698456	25HBC324(A,W)**30	CAP**3017A**	58VMR105–12	22,800	11.5	13.5	22,000	3.62	7.8	13,200	2.42
3698350	25HBC324(A,W)**30	CNPH*2417A**	58CV(A,X)070–12	22,600	11.5	13.5	22,200	3.64	8.0	13,300	2.40
3698351	25HBC324(A,W)**30	CNPH*2417A**	58CV(A,X)090–16	22,800	11.5	13.5	22,200	3.68	8.0	13,300	2.42
3698352	25HBC324(A,W)**30	CNPH*2417A**	58CV(A,X)110–20	22,800	11.5	13.5	22,200	3.66	8.0	13,300	2.42
3698353	25HBC324(A,W)**30	CNPH*2417A**	58CV(A,X)135–22	22,800	11.5	13.5	22,200	3.66	8.0	13,300	2.42
3698354	25HBC324(A,W)**30	CNPH*2417A**	58CV(A,X)155–22	22,800	11.5	13.5	22,200	3.68	8.0	13,300	2.42
3698359	25HBC324(A,W)**30	CNPH*2417A**	58HDV040––12	22,800	11.0	13.2	22,400	3.66	8.0	13,600	2.40
3698360	25HBC324(A,W)**30	CNPH*2417A**	58HDV060––12	23,000	11.0	13.2	22,600	3.70	8.0	13,700	2.42
3698361	25HBC324(A,W)**30	CNPH*2417A**	58HDV080––20	23,000	11.5	13.5	22,800	3.80	8.0	13,800	2.48
3698362	25HBC324(A,W)**30	CNPH*2417A**	58HDV100––20	23,000	11.5	13.5	22,600	3.76	8.0	13,700	2.46
3698357	25HBC324(A,W)**30	CNPH*2417A**	58ME(B,C)060–12	23,000	11.5	13.5	22,400	3.76	8.0	13,500	2.46
3698358	25HBC324(A,W)**30	CNPH*2417A**	58ME(B,C)080–12	23,000	11.5	13.5	22,400	3.74	8.0	13,400	2.46
3698356	25HBC324(A,W)**30	CNPH*2417A**	58MEB040–12	23,000	11.5	13.5	22,400	3.76	8.0	13,400	2.46
3698345	25HBC324(A,W)**30	CNPH*2417A**	58MV(B,C)060–14	23,000	11.5	13.5	22,400	3.74	8.0	13,500	2.46
3698346	25HBC324(A,W)**30	CNPH*2417A**	58MV(B,C)080–14	22,800	11.5	13.5	22,200	3.64	8.0	13,300	2.42
3698347	25HBC324(A,W)**30	CNPH*2417A**	58MV(B,C)080–20	22,800	11.5	13.5	22,000	3.60	7.8	13,200	2.40
3698348	25HBC324(A,W)**30	CNPH*2417A**	58MV(B,C)100–20	22,800	11.5	13.5	22,200	3.66	8.0	13,300	2.42
3698349	25HBC324(A,W)**30	CNPH*2417A**	58MV(B,C)120–20	22,800	11.5	13.5	22,400	3.70	8.0	13,300	2.44
3698344	25HBC324(A,W)**30	CNPH*2417A**	58MVB040–14	22,800	11.5	13.5	22,200	3.66	8.0	13,300	2.42
3698355	25HBC324(A,W)**30	CNPH*2417A**	58PH*045–08	22,800	11.5	13.5	22,200	3.68	8.0	13,400	2.42
3698465	25HBC324(A,W)**30	CNPH*2417A**	58VLR105–12	22,800	11.5	13.5	22,000	3.72	8.0	13,400	2.44
3698464	25HBC324(A,W)**30	CNPH*2417A**	58VMR105–12	22,600	11.5	13.5	22,000	3.62	7.8	13,300	2.40
3698369	25HBC324(A,W)**30	CNPH*3017A**	58CV(A,X)070–12	22,800	11.5	13.5	22,200	3.62	8.0	13,200	2.42
3698370	25HBC324(A,W)**30	CNPH*3017A**	58CV(A,X)090–16	23,000	11.5	14.0	22,200	3.66	8.0	13,200	2.44
3698371	25HBC324(A,W)**30	CNPH*3017A**	58CV(A,X)110–20	23,000	11.5	13.5	22,200	3.66	8.0	13,300	2.44
3698372	25HBC324(A,W)**30	CNPH*3017A**	58CV(A,X)135–22	23,000	11.5	13.5	22,200	3.66	8.0	13,300	2.44
3698373	25HBC324(A,W)**30	CNPH*3017A**	58CV(A,X)155–22	23,000	11.5	13.5	22,200	3.66	8.0	13,200	2.44
3698378	25HBC324(A,W)**30	CNPH*3017A**	58HDV040––12	23,000	11.5	13.5	22,600	3.68	8.0	13,700	2.44
3698379	25HBC324(A,W)**30	CNPH*3017A**	58HDV060––12	23,000	11.5	13.5	22,600	3.76	8.0	13,800	2.48
3698380	25HBC324(A,W)**30	CNPH*3017A**	58HDV100––20	23,000	11.5	13.5	22,600	3.86	8.0	13,800	2.52
3698376	25HBC324(A,W)**30	CNPH*3017A**	58ME(B,C)060–12	23,000	11.5	14.0	22,400	3.82	8.0	13,600	2.52
3698377	25HBC324(A,W)**30	CNPH*3017A**	58ME(B,C)080–12	23,000	11.5	14.0	22,400	3.78	8.0	13,500	2.50
3698375	25HBC324(A,W)**30	CNPH*3017A**	58MEB040–12	23,000	11.5	14.0	22,400	3.82	8.0	13,500	2.52
3698364	25HBC324(A,W)**30	CNPH*3017A**	58MV(B,C)060–14	23,000	11.5	14.0	22,400	3.74	8.0	13,400	2.48
3698365	25HBC324(A,W)**30	CNPH*3017A**	58MV(B,C)080–14	22,800	11.5	13.5	22,200	3.64	8.0	13,200	2.44
3698366	25HBC324(A,W)**30	CNPH*3017A**	58MV(B,C)080–20	22,800	11.5	13.5	22,000	3.58	8.0	13,100	2.40
3698367	25HBC324(A,W)**30	CNPH*3017A**	58MV(B,C)100–20	22,800	11.5	13.5	22,000	3.64	8.0	13,200	2.44
3698368	25HBC324(A,W)**30	CNPH*3017A**	58MV(B,C)120–20	23,000	11.5	14.0	22,200	3.68	8.0	13,300	2.46
3698363	25HBC324(A,W)**30	CNPH*3017A**	58MVB040–14	23,000	11.5	13.5	22,200	3.64	8.0	13,300	2.44
3698374	25HBC324(A,W)**30	CNPH*3017A**	58PH*045–08	23,000	11.5	13.5	22,400	3.70	8.0	13,500	2.46
3698467	25HBC324(A,W)**30	CNPH*3017A**	58VLR105–12	22,800	11.5	13.5	22,000	3.72	8.0	13,400	2.46
3698466	25HBC324(A,W)**30	CNPH*3017A**	58VMR105–12	22,800	11.5	13.5	22,000	3.62	7.8	13,200	2.42
3698387	25HBC324(A,W)**30	CNPH*3117A**	58CV(A,X)070–12	23,200	11.5	14.0	22,400	3.80	8.0	13,400	2.48
3698388	25HBC324(A,W)**30	CNPH*3117A**	58CV(A,X)090–16	23,200	11.5	14.0	22,200	3.84	8.0	13,300	2.50
3698389	25HBC324(A,W)**30	CNPH*3117A**	58CV(A,X)110–20	23,200	11.5	14.0	22,400	3.82	8.0	13,400	2.50
3698390	25HBC324(A,W)**30	CNPH*3117A**	58CV(A,X)135–22	23,200	11.5	14.0	22,200	3.84	8.0	13,400	2.50
3698391	25HBC324(A,W)**30	CNPH*3117A**	58CV(A,X)155–22	23,200	11.5	14.0	22,200	3.84	8.0	13,400	2.50
3698396	25HBC324(A,W)**30	CNPH*3117A**	58HDV040––12	23,200	11.5	13.5	22,400	3.84	8.0	13,800	2.50
3698397	25HBC324(A,W)**30	CNPH*3117A**	58HDV060––12	23,200	11.5	13.5	22,400	3.86	8.0	14,000	2.54
3698398	25HBC324(A,W)**30	CNPH*3117A**	58HDV100––20	23,200	11.5	14.0	22,000	3.94	8.0	14,000	2.60
3698394	25HBC324(A,W)**30	CNPH*3117A**	58ME(B,C)060–12	23,200	12.0	14.5	22,200	3.96	8.2	13,800	2.60
3698395	25HBC324(A,W)**30	CNPH*3117A**	58ME(B,C)080–12	23,200	11.5	14.0	22,200	3.94	8.0	13,700	2.56

See notes on page 45

COMBINATION RATINGS CONTINUED

AHRI Ref. No.	Model Number	Coil Model Number	Furnace Model Number	Cooling Capacity	EER	SEER	High Temp		HSPF	Low Temp	
							E Capacity	E COP		H Capacity	H COP
3698393	25HBC324(A,W)**30	CNPH*3117A**	58MEB040−12	23,200	12.0	14.5	22,200	3.96	8.2	13,700	2.58
3698382	25HBC324(A,W)**30	CNPH*3117A**	58MV(B,C)060−14	23,200	11.5	14.0	22,400	3.90	8.0	13,500	2.54
3698383	25HBC324(A,W)**30	CNPH*3117A**	58MV(B,C)080−14	23,200	11.5	14.0	22,200	3.80	8.0	13,300	2.48
3698384	25HBC324(A,W)**30	CNPH*3117A**	58MV(B,C)080−20	23,000	11.5	14.0	22,200	3.74	8.0	13,200	2.46
3698385	25HBC324(A,W)**30	CNPH*3117A**	58MV(B,C)100−20	23,200	11.5	14.0	22,200	3.82	8.0	13,300	2.50
3698386	25HBC324(A,W)**30	CNPH*3117A**	58MV(B,C)120−20	23,200	11.5	14.0	22,400	3.86	8.0	13,400	2.52
3698381	25HBC324(A,W)**30	CNPH*3117A**	58MVB040−14	23,200	11.5	14.0	22,400	3.82	8.0	13,400	2.48
3698392	25HBC324(A,W)**30	CNPH*3117A**	58PH*045−08	23,200	11.5	14.0	22,400	3.86	8.0	13,700	2.52
3698469	25HBC324(A,W)**30	CNPH*3117A**	58VLR105−12	23,000	11.5	14.0	22,000	3.88	8.0	13,500	2.52
3698468	25HBC324(A,W)**30	CNPH*3117A**	58VMR105−12	23,000	11.5	14.0	22,000	3.80	8.0	13,300	2.48
3698325	25HBC324(A,W)**30	CNPV*2414A**	58CV(A,X)070−12	22,800	11.0	13.5	22,200	3.64	8.0	13,300	2.40
3698326	25HBC324(A,W)**30	CNPV*2414A**	58PH*045−08	22,800	11.0	13.5	22,400	3.68	8.0	13,400	2.42
3698328	25HBC324(A,W)**30	CNPV*2417A**	58CV(A,X)090−16	22,800	11.0	13.5	22,200	3.68	8.0	13,300	2.42
3698330	25HBC324(A,W)**30	CNPV*2417A**	58ME(B,C)060−12	23,000	11.0	13.5	22,400	3.76	8.0	13,500	2.46
3698331	25HBC324(A,W)**30	CNPV*2417A**	58ME(B,C)080−12	23,000	11.0	13.5	22,400	3.74	8.0	13,400	2.46
3698329	25HBC324(A,W)**30	CNPV*2417A**	58MEB040−12	23,000	11.0	13.5	22,400	3.76	8.0	13,400	2.46
3698327	25HBC324(A,W)**30	CNPV*2417A**	58MV(B,C)060−14	23,000	11.0	13.5	22,400	3.74	8.0	13,500	2.46
3699419	25HBC324(A,W)**30	CNPV*2417A**	58UVB060−14	23,000	11.0	13.5	22,400	3.74	8.0	13,500	2.46
3698459	25HBC324(A,W)**30	CNPV*2417A**	58VLR105−12	22,800	11.5	13.5	22,000	3.72	8.0	13,400	2.44
3698458	25HBC324(A,W)**30	CNPV*2417A**	58VMR105−12	22,600	11.5	13.5	22,000	3.62	7.8	13,300	2.40
3698332	25HBC324(A,W)**30	CNPV*3014A**	58CV(A,X)070−12	22,800	11.0	13.5	22,000	3.62	7.8	13,300	2.42
3698333	25HBC324(A,W)**30	CNPV*3014A**	58PH*045−08	23,000	11.0	13.5	22,400	3.66	8.0	13,500	2.44
3698335	25HBC324(A,W)**30	CNPV*3017A**	58CV(A,X)090−16	23,000	11.5	14.0	22,000	3.66	8.0	13,200	2.44
3698337	25HBC324(A,W)**30	CNPV*3017A**	58ME(B,C)060−12	23,000	11.5	14.0	22,400	3.82	8.0	13,600	2.52
3698338	25HBC324(A,W)**30	CNPV*3017A**	58ME(B,C)080−12	23,000	11.5	14.0	22,400	3.78	8.0	13,500	2.50
3698336	25HBC324(A,W)**30	CNPV*3017A**	58MEB040−12	23,000	11.5	14.0	22,400	3.82	8.0	13,500	2.52
3698334	25HBC324(A,W)**30	CNPV*3017A**	58MV(B,C)060−14	23,000	11.5	14.0	22,400	3.74	8.0	13,400	2.48
3699420	25HBC324(A,W)**30	CNPV*3017A**	58UVB060−14	23,000	11.5	14.0	22,400	3.74	8.0	13,400	2.48
3698461	25HBC324(A,W)**30	CNPV*3017A**	58VLR105−12	22,800	11.5	13.5	22,000	3.72	8.0	13,400	2.46
3698460	25HBC324(A,W)**30	CNPV*3017A**	58VMR105−12	22,800	11.5	13.5	22,000	3.62	7.8	13,200	2.42
3698340	25HBC324(A,W)**30	CNPV*3117A**	58CV(A,X)090−16	23,000	11.5	14.0	22,200	3.82	8.0	13,400	2.50
3698342	25HBC324(A,W)**30	CNPV*3117A**	58ME(B,C)060−12	23,200	12.0	14.5	22,200	3.96	8.2	13,800	2.60
3698343	25HBC324(A,W)**30	CNPV*3117A**	58ME(B,C)080−12	23,000	11.5	14.0	22,200	3.94	8.0	13,700	2.56
3698341	25HBC324(A,W)**30	CNPV*3117A**	58MEB040−12	23,200	12.0	14.5	22,200	3.96	8.2	13,700	2.58
3698339	25HBC324(A,W)**30	CNPV*3117A**	58MV(B,C)060−14	23,000	11.5	14.0	22,200	3.90	8.0	13,500	2.54
3699421	25HBC324(A,W)**30	CNPV*3117A**	58UVB060−14	23,000	11.5	14.0	22,200	3.90	8.0	13,500	2.54
3698463	25HBC324(A,W)**30	CNPV*3117A**	58VLR105−12	23,000	11.5	14.0	22,000	3.88	8.0	13,500	2.52
3698462	25HBC324(A,W)**30	CNPV*3117A**	58VMR105−12	23,000	11.5	14.0	22,000	3.80	8.0	13,300	2.48
3698405	25HBC324(A,W)**30	CSPH*2412A**	58CV(A,X)070−12	22,800	11.5	13.5	22,200	3.64	8.0	13,300	2.42
3698406	25HBC324(A,W)**30	CSPH*2412A**	58CV(A,X)090−16	23,000	11.5	13.5	22,200	3.66	8.0	13,300	2.44
3698407	25HBC324(A,W)**30	CSPH*2412A**	58CV(A,X)110−20	23,000	11.5	13.5	22,400	3.66	8.0	13,400	2.42
3698408	25HBC324(A,W)**30	CSPH*2412A**	58CV(A,X)135−22	23,000	11.5	13.5	22,400	3.66	8.0	13,400	2.42
3698409	25HBC324(A,W)**30	CSPH*2412A**	58CV(A,X)155−22	23,000	11.5	13.5	22,200	3.66	8.0	13,400	2.42
3698414	25HBC324(A,W)**30	CSPH*2412A**	58HDV040−−12	23,000	11.0	13.2	22,400	3.64	8.0	13,600	2.40
3698415	25HBC324(A,W)**30	CSPH*2412A**	58HDV060−−12	23,000	11.0	13.2	22,600	3.68	8.0	13,700	2.42
3698416	25HBC324(A,W)**30	CSPH*2412A**	58HDV080−−20	23,000	11.5	13.5	22,600	3.80	8.0	13,900	2.48
3698417	25HBC324(A,W)**30	CSPH*2412A**	58HDV100−−20	23,000	11.5	13.5	22,600	3.76	8.0	13,700	2.46
3698412	25HBC324(A,W)**30	CSPH*2412A**	58ME(B,C)060−12	23,000	11.5	13.5	22,400	3.74	8.0	13,500	2.48
3698413	25HBC324(A,W)**30	CSPH*2412A**	58ME(B,C)080−12	23,000	11.5	13.5	22,400	3.72	8.0	13,400	2.46
3698411	25HBC324(A,W)**30	CSPH*2412A**	58MEB040−12	23,000	11.5	13.5	22,400	3.74	8.0	13,400	2.46
3698400	25HBC324(A,W)**30	CSPH*2412A**	58MV(B,C)060−14	23,000	11.5	13.5	22,400	3.74	8.0	13,500	2.46
3698401	25HBC324(A,W)**30	CSPH*2412A**	58MV(B,C)080−14	22,800	11.5	13.5	22,200	3.64	8.0	13,300	2.42
3698402	25HBC324(A,W)**30	CSPH*2412A**	58MV(B,C)080−20	22,800	11.5	13.5	22,000	3.58	7.8	13,200	2.40
3698403	25HBC324(A,W)**30	CSPH*2412A**	58MV(B,C)100−20	22,800	11.5	13.5	22,200	3.66	8.0	13,300	2.42
3698404	25HBC324(A,W)**30	CSPH*2412A**	58MV(B,C)120−20	23,000	11.5	13.5	22,400	3.70	8.0	13,400	2.44
3698399	25HBC324(A,W)**30	CSPH*2412A**	58MVB040−14	22,800	11.5	13.5	22,400	3.64	8.0	13,400	2.42
3698410	25HBC324(A,W)**30	CSPH*2412A**	58PH*045−08	23,000	11.5	13.5	22,400	3.66	8.0	13,400	2.42
3698471	25HBC324(A,W)**30	CSPH*2412A**	58VLR105−12	22,800	11.5	13.5	22,000	3.72	8.0	13,500	2.46
3698470	25HBC324(A,W)**30	CSPH*2412A**	58VMR105−12	22,800	11.5	13.5	22,000	3.62	7.8	13,400	2.40
3698424	25HBC324(A,W)**30	CSPH*3012A**	58CV(A,X)070−12	23,000	11.5	13.5	22,000	3.62	7.8	13,300	2.42
3698425	25HBC324(A,W)**30	CSPH*3012A**	58CV(A,X)090−16	23,000	11.5	13.5	22,000	3.66	8.0	13,300	2.44
3698426	25HBC324(A,W)**30	CSPH*3012A**	58CV(A,X)110−20	23,000	11.5	13.5	22,200	3.64	8.0	13,300	2.44
3698427	25HBC324(A,W)**30	CSPH*3012A**	58CV(A,X)135−22	23,000	11.5	13.5	22,200	3.66	8.0	13,300	2.44
3698428	25HBC324(A,W)**30	CSPH*3012A**	58CV(A,X)155−22	23,000	11.5	13.5	22,200	3.66	8.0	13,300	2.44
3698433	25HBC324(A,W)**30	CSPH*3012A**	58HDV040−−12	23,000	11.5	13.5	22,400	3.68	8.0	13,600	2.44
3698434	25HBC324(A,W)**30	CSPH*3012A**	58HDV060−−12	23,000	11.5	13.5	22,600	3.74	8.0	13,800	2.46
3698435	25HBC324(A,W)**30	CSPH*3012A**	58HDV100−−20	23,000	11.5	13.5	22,600	3.84	8.0	13,800	2.52
3698431	25HBC324(A,W)**30	CSPH*3012A**	58ME(B,C)060−12	23,000	11.5	14.0	22,400	3.80	8.0	13,500	2.50
3698432	25HBC324(A,W)**30	CSPH*3012A**	58ME(B,C)080−12	23,000	11.5	14.0	22,400	3.76	8.0	13,500	2.48
3698430	25HBC324(A,W)**30	CSPH*3012A**	58MEB040−12	23,000	11.5	14.0	22,400	3.78	8.0	13,500	2.50
3698419	25HBC324(A,W)**30	CSPH*3012A**	58MV(B,C)060−14	23,000	11.5	13.5	22,400	3.72	8.0	13,400	2.48
3698420	25HBC324(A,W)**30	CSPH*3012A**	58MV(B,C)080−14	23,000	11.5	13.5	22,000	3.62	8.0	13,300	2.42
3698421	25HBC324(A,W)**30	CSPH*3012A**	58MV(B,C)080−20	22,800	11.5	13.5	22,000	3.58	7.8	13,200	2.40
3698422	25HBC324(A,W)**30	CSPH*3012A**	58MV(B,C)100−20	23,000	11.5	13.5	22,000	3.64	8.0	13,300	2.44
3698423	25HBC324(A,W)**30	CSPH*3012A**	58MV(B,C)120−20	23,000	11.5	13.5	22,200	3.68	8.0	13,300	2.46
3698418	25HBC324(A,W)**30	CSPH*3012A**	58MVB040−14	23,000	11.5	13.5	22,200	3.64	8.0	13,300	2.42
3698429	25HBC324(A,W)**30	CSPH*3012A**	58PH*045−08	23,000	11.5	13.5	22,400	3.68	8.0	13,500	2.44
3698473	25HBC324(A,W)**30	CSPH*3012A**	58VLR105−12	23,000	11.5	13.5	22,000	3.72	8.0	13,400	2.46
3698472	25HBC324(A,W)**30	CSPH*3012A**	58VMR105−12	22,800	11.5	13.5	22,000	3.62	7.8	13,300	2.42
3699496	25HBC330(A,W)**30	†FY5BNF030		30,000	11.0	13.0	30,000	3.52	7.7	18,500	2.34
3699497	25HBC330(A,W)**30	FB4CNF030		30,000	11.0	13.0	30,000	3.52	7.7	18,300	2.34
3698644	25HBC330(A,W)**30	FB4CNF030+TXV		30,000	11.0	13.2	30,000	3.52	7.7	18,300	2.34
3699498	25HBC330(A,W)**30	FB4CNF036		30,000	11.0	13.0	30,000	3.52	7.7	18,300	2.34
3698645	25HBC330(A,W)**30	FB4CNF036+TXV		30,000	11.0	13.2	30,000	3.52	7.7	18,300	2.34
3698632	25HBC330(A,W)**30	FE4AN(B,F)003+UI		30,000	11.5	13.5	29,200	3.54	7.7	17,800	2.38
3698633	25HBC330(A,W)**30	FE4AN(B,F)005+UI		30,000	11.5	14.0	29,200	3.72	8.0	18,000	2.46

See notes on page 45

COMBINATION RATINGS CONTINUED

AHRI Ref. No.	Model Number	Coil Model Number	Furnace Model Number	Cooling Capacity	EER	SEER	High Temp		HSPF	Low Temp	
							E Capacity	E COP		H Capacity	H COP
3698631	25HBC330(A,W)**30	FE4ANF002+UI		30,000	11.5	13.5	29,200	3.54	7.7	18,000	2.36
3698634	25HBC330(A,W)**30	FF1ENP031		30,000	11.0	13.0	29,600	3.50	7.7	18,300	2.36
3698635	25HBC330(A,W)**30	FF1ENP037		30,000	11.0	13.2	30,000	3.50	7.7	18,500	2.36
3698637	25HBC330(A,W)**30	FV4BN(B,F)003		30,000	11.5	13.5	29,200	3.54	7.7	17,800	2.38
3698638	25HBC330(A,W)**30	FV4BN(B,F)005		30,000	11.5	14.0	29,000	3.72	8.0	18,000	2.46
3698636	25HBC330(A,W)**30	FV4BNF002		30,000	11.5	13.5	29,200	3.54	7.7	18,000	2.36
3698640	25HBC330(A,W)**30	FV4CN(B,F)003		30,000	11.5	13.5	29,200	3.54	7.7	17,800	2.38
3698641	25HBC330(A,W)**30	FV4CN(B,F)005		30,000	11.5	14.0	29,000	3.72	8.0	18,000	2.46
3698639	25HBC330(A,W)**30	FV4CNF002		30,000	11.5	13.5	29,200	3.54	7.7	18,000	2.36
3698643	25HBC330(A,W)**30	FX4CN(B,F)036		30,000	11.0	13.2	29,200	3.52	7.7	18,500	2.36
3698642	25HBC330(A,W)**30	FX4CNF030		30,000	11.0	13.2	29,200	3.54	7.7	18,300	2.36
3698629	25HBC330(A,W)**30	FX4DN(B,F)031		30,000	11.5	13.5	29,200	3.60	7.8	18,300	2.40
3698630	25HBC330(A,W)**30	FX4DN(B,F)037		30,000	11.5	14.0	30,000	3.72	8.0	18,300	2.44
3698646	25HBC330(A,W)**30	FY5BNF030+TXV		30,000	11.0	13.2	30,000	3.52	7.7	18,500	2.34
3698474	25HBC330(A,W)**30	CAP**3014A**	58CV(A,X)070–12	30,000	11.0	13.0	29,200	3.42	7.7	18,000	2.32
3698476	25HBC330(A,W)**30	CAP**3017A**	58CV(A,X)090–16	30,000	11.5	13.5	29,200	3.46	7.7	17,800	2.36
3698479	25HBC330(A,W)**30	CAP**3017A**	58ME(B,C)060–12	30,000	11.5	13.5	29,200	3.54	7.8	18,100	2.38
3698480	25HBC330(A,W)**30	CAP**3017A**	58ME(B,C)080–12	30,000	11.5	13.5	29,200	3.52	7.7	18,000	2.38
3698481	25HBC330(A,W)**30	CAP**3017A**	58ME(B,C)080–16	30,000	11.5	13.5	29,200	3.56	7.7	18,200	2.38
3698478	25HBC330(A,W)**30	CAP**3017A**	58MEB040–12	30,000	11.5	13.5	29,200	3.54	7.8	18,000	2.38
3698475	25HBC330(A,W)**30	CAP**3017A**	58MV(B,C)060–14	30,000	11.0	13.5	29,200	3.48	7.7	18,000	2.36
3698477	25HBC330(A,W)**30	CAP**3017A**	58PH*070–16	30,000	11.0	13.2	29,200	3.46	7.7	18,200	2.34
3699422	25HBC330(A,W)**30	CAP**3017A**	58UVB060–14	30,000	11.0	13.5	29,200	3.48	7.7	18,000	2.36
3698647	25HBC330(A,W)**30	CAP**3017A**	58VLR105–12	30,000	11.0	13.2	29,000	3.48	7.7	18,000	2.36
3698482	25HBC330(A,W)**30	CAP**3614A**	58CV(A,X)070–12	30,000	11.0	13.2	29,200	3.44	7.7	18,000	2.34
3698484	25HBC330(A,W)**30	CAP**3617A**	58CV(A,X)090–16	30,000	11.5	13.5	29,200	3.48	7.7	17,800	2.36
3698487	25HBC330(A,W)**30	CAP**3617A**	58ME(B,C)060–12	30,000	11.5	13.5	29,200	3.58	7.8	18,100	2.40
3698488	25HBC330(A,W)**30	CAP**3617A**	58ME(B,C)080–12	30,000	11.5	13.5	29,200	3.56	7.7	18,100	2.38
3698489	25HBC330(A,W)**30	CAP**3617A**	58ME(B,C)080–16	30,000	11.5	13.5	29,200	3.58	7.8	18,300	2.40
3698486	25HBC330(A,W)**30	CAP**3617A**	58MEB040–12	30,000	11.5	13.5	29,200	3.58	7.8	18,100	2.40
3698483	25HBC330(A,W)**30	CAP**3617A**	58MV(B,C)060–14	30,000	11.5	13.5	29,200	3.50	7.7	18,000	2.38
3698485	25HBC330(A,W)**30	CAP**3617A**	58PH*070–16	30,000	11.0	13.2	29,200	3.50	7.7	18,200	2.36
3699423	25HBC330(A,W)**30	CAP**3617A**	58UVB060–14	30,000	11.5	13.5	29,200	3.50	7.7	18,000	2.38
3698649	25HBC330(A,W)**30	CAP**3617A**	58VLR105–12	30,000	11.0	13.2	29,000	3.50	7.7	18,100	2.36
3698648	25HBC330(A,W)**30	CAP**3617A**	58VMR105–12	29,800	11.0	13.2	29,000	3.42	7.7	17,800	2.34
3698495	25HBC330(A,W)**30	CAP**3619A**	58HDV040––12	30,000	11.0	13.0	29,200	3.46	7.7	18,300	2.32
3698496	25HBC330(A,W)**30	CAP**3619A**	58HDV060––12	30,000	11.0	13.2	29,200	3.50	7.7	18,400	2.36
3698493	25HBC330(A,W)**30	CAP**3621A**	58CV(A,X)110–20	30,000	11.5	13.5	29,200	3.50	7.7	17,900	2.38
3698490	25HBC330(A,W)**30	CAP**3621A**	58MV(B,C)080–14	30,000	11.5	13.5	29,200	3.46	7.7	17,800	2.34
3698491	25HBC330(A,W)**30	CAP**3621A**	58MV(B,C)080–20	30,000	11.5	13.5	29,200	3.48	7.7	17,900	2.36
3698492	25HBC330(A,W)**30	CAP**3621A**	58MV(B,C)100–20	30,000	11.0	13.2	29,200	3.42	7.7	17,800	2.34
3698494	25HBC330(A,W)**30	CAP**3621A**	58PH*090–16	30,000	11.5	13.5	29,200	3.56	7.8	18,100	2.40
3699424	25HBC330(A,W)**30	CAP**3621A**	58UVB080–14	30,000	11.5	13.5	29,200	3.46	7.7	17,800	2.34
3699425	25HBC330(A,W)**30	CAP**3621A**	58UVB080–20	30,000	11.5	13.5	29,200	3.48	7.7	17,900	2.36
3699426	25HBC330(A,W)**30	CAP**3621A**	58UVB100–20	30,000	11.0	13.2	29,200	3.42	7.7	17,800	2.34
3698535	25HBC330(A,W)**30	CNPH*3017A**	58CV(A,X)070–12	30,000	11.0	13.2	29,200	3.44	7.7	18,000	2.34
3698536	25HBC330(A,W)**30	CNPH*3017A**	58CV(A,X)090–16	30,000	11.5	13.5	29,200	3.46	7.7	17,900	2.36
3698537	25HBC330(A,W)**30	CNPH*3017A**	58CV(A,X)110–20	30,000	11.5	13.5	29,200	3.48	7.7	17,900	2.36
3698538	25HBC330(A,W)**30	CNPH*3017A**	58CV(A,X)135–22	30,000	11.5	13.5	29,200	3.48	7.7	17,900	2.36
3698539	25HBC330(A,W)**30	CNPH*3017A**	58CV(A,X)155–22	30,000	11.5	13.5	29,200	3.48	7.7	17,900	2.36
3698546	25HBC330(A,W)**30	CNPH*3017A**	58HDV060––12	30,000	11.0	13.0	29,200	3.46	7.7	18,300	2.34
3698547	25HBC330(A,W)**30	CNPH*3017A**	58HDV080––20	30,000	11.0	13.2	29,200	3.54	7.7	18,300	2.38
3698548	25HBC330(A,W)**30	CNPH*3017A**	58HDV100––20	30,000	11.5	13.5	29,200	3.50	7.7	18,100	2.36
3698543	25HBC330(A,W)**30	CNPH*3017A**	58ME(B,C)060–12	30,000	11.5	13.5	29,200	3.54	7.7	18,100	2.38
3698544	25HBC330(A,W)**30	CNPH*3017A**	58ME(B,C)080–12	30,000	11.5	13.5	29,200	3.52	7.7	18,000	2.38
3698545	25HBC330(A,W)**30	CNPH*3017A**	58ME(B,C)080–16	30,000	11.5	13.5	29,200	3.56	7.8	18,200	2.38
3698542	25HBC330(A,W)**30	CNPH*3017A**	58MEB040–12	30,000	11.5	13.5	29,200	3.54	7.7	18,000	2.38
3698531	25HBC330(A,W)**30	CNPH*3017A**	58MV(B,C)060–14	30,000	11.5	13.5	29,200	3.50	7.7	18,000	2.36
3698532	25HBC330(A,W)**30	CNPH*3017A**	58MV(B,C)080–14	30,000	11.0	13.2	29,200	3.42	7.7	17,900	2.32
3698533	25HBC330(A,W)**30	CNPH*3017A**	58MV(B,C)080–20	30,000	11.0	13.5	29,200	3.44	7.7	17,900	2.34
3698534	25HBC330(A,W)**30	CNPH*3017A**	58MV(B,C)120–20	30,000	11.5	13.5	29,200	3.48	7.7	17,900	2.36
3698530	25HBC330(A,W)**30	CNPH*3017A**	58MVB040–14	30,000	11.0	13.2	29,200	3.44	7.7	18,000	2.34
3698540	25HBC330(A,W)**30	CNPH*3017A**	58PH*070–16	30,000	11.0	13.2	29,200	3.46	7.7	18,200	2.34
3698541	25HBC330(A,W)**30	CNPH*3017A**	58PH*090–16	30,000	11.5	13.5	29,200	3.50	7.7	18,100	2.36
3698656	25HBC330(A,W)**30	CNPH*3017A**	58VLR105–12	30,000	11.0	13.2	29,000	3.48	7.7	18,100	2.36
3698555	25HBC330(A,W)**30	CNPH*3117A**	58CV(A,X)070–12	30,000	11.5	13.5	29,200	3.58	7.7	18,100	2.40
3698556	25HBC330(A,W)**30	CNPH*3117A**	58CV(A,X)090–16	30,000	11.5	13.5	29,200	3.60	7.7	18,000	2.42
3698557	25HBC330(A,W)**30	CNPH*3117A**	58CV(A,X)110–20	30,000	11.5	13.5	29,200	3.62	7.7	18,100	2.42
3698558	25HBC330(A,W)**30	CNPH*3117A**	58CV(A,X)135–22	30,000	11.5	13.5	29,200	3.62	7.7	18,000	2.42
3698559	25HBC330(A,W)**30	CNPH*3117A**	58CV(A,X)155–22	30,000	11.5	14.0	29,200	3.64	7.8	18,000	2.42
3698566	25HBC330(A,W)**30	CNPH*3117A**	58HDV040––12	30,000	11.0	13.2	30,000	3.58	7.8	18,500	2.38
3698567	25HBC330(A,W)**30	CNPH*3117A**	58HDV060––12	30,000	11.0	13.2	30,000	3.64	7.8	18,500	2.40
3698568	25HBC330(A,W)**30	CNPH*3117A**	58HDV080––20	30,000	11.5	13.5	30,000	3.74	8.0	18,500	2.44
3698569	25HBC330(A,W)**30	CNPH*3117A**	58HDV100––20	30,000	11.5	13.5	29,200	3.68	7.8	18,200	2.44
3698563	25HBC330(A,W)**30	CNPH*3117A**	58ME(B,C)060–12	30,000	11.5	13.5	29,200	3.72	8.0	18,300	2.44
3698564	25HBC330(A,W)**30	CNPH*3117A**	58ME(B,C)080–12	30,000	11.5	13.5	29,200	3.70	7.8	18,200	2.44
3698565	25HBC330(A,W)**30	CNPH*3117A**	58ME(B,C)080–16	30,000	11.5	13.5	30,000	3.74	8.0	18,400	2.46
3698562	25HBC330(A,W)**30	CNPH*3117A**	58MEB040–12	30,000	11.5	13.5	29,200	3.72	8.0	18,200	2.44
3698550	25HBC330(A,W)**30	CNPH*3117A**	58MV(B,C)060–14	30,000	11.5	13.5	29,200	3.64	7.8	18,100	2.42
3698551	25HBC330(A,W)**30	CNPH*3117A**	58MV(B,C)080–14	30,000	11.5	13.5	29,200	3.56	7.7	18,000	2.38
3698552	25HBC330(A,W)**30	CNPH*3117A**	58MV(B,C)080–20	30,000	11.5	13.5	29,200	3.60	7.8	18,100	2.40
3698553	25HBC330(A,W)**30	CNPH*3117A**	58MV(B,C)100–20	30,000	11.5	13.5	29,200	3.54	7.7	18,000	2.38
3698554	25HBC330(A,W)**30	CNPH*3117A**	58MV(B,C)120–20	30,000	11.5	13.5	29,200	3.62	7.8	18,000	2.42
3698549	25HBC330(A,W)**30	CNPH*3117A**	58MVB040–14	30,000	11.5	13.5	29,200	3.58	7.7	18,100	2.40
3698560	25HBC330(A,W)**30	CNPH*3117A**	58PH*070–16	30,000	11.5	13.5	29,200	3.64	7.8	18,400	2.40
3698561	25HBC330(A,W)**30	CNPH*3117A**	58PH*090–16	30,000	11.5	13.5	29,200	3.68	8.0	18,300	2.42
3698658	25HBC330(A,W)**30	CNPH*3117A**	58VLR105–12	30,000	11.5	13.5	29,000	3.64	7.8	18,200	2.42

See notes on page 45

COMBINATION RATINGS CONTINUED

AHRI Ref. No.	Model Number	Coil Model Number	Furnace Model Number	Cooling Capacity	EER	SEER	High Temp		HSPF	Low Temp	
							E Capacity	E COP		H Capacity	H COP
3698657	25HBC330(A,W)**30	CNPH*3117A**	58VMR105−12	30,000	11.5	13.5	29,000	3.54	7.7	18,000	2.38
3698575	25HBC330(A,W)**30	CNPH*3617A**	58CV(A,X)070−12	30,000	11.0	13.2	29,200	3.44	7.7	18,000	2.34
3698576	25HBC330(A,W)**30	CNPH*3617A**	58CV(A,X)090−16	30,000	11.5	13.5	29,200	3.46	7.7	17,900	2.36
3698577	25HBC330(A,W)**30	CNPH*3617A**	58CV(A,X)110−20	30,000	11.5	13.5	29,200	3.48	7.7	17,900	2.36
3698578	25HBC330(A,W)**30	CNPH*3617A**	58CV(A,X)135−22	30,000	11.5	13.5	29,200	3.48	7.7	17,900	2.36
3698579	25HBC330(A,W)**30	CNPH*3617A**	58CV(A,X)155−22	30,000	11.5	13.5	29,200	3.48	7.7	17,900	2.36
3698586	25HBC330(A,W)**30	CNPH*3617A**	58HDV060−−12	30,000	11.0	13.0	29,200	3.46	7.7	18,300	2.34
3698587	25HBC330(A,W)**30	CNPH*3617A**	58HDV080−−20	30,000	11.0	13.2	29,200	3.54	7.7	18,300	2.38
3698588	25HBC330(A,W)**30	CNPH*3617A**	58HDV100−−20	30,000	11.5	13.5	29,200	3.50	7.7	18,100	2.36
3698583	25HBC330(A,W)**30	CNPH*3617A**	58ME(B,C)060−12	30,000	11.5	13.5	29,200	3.54	7.7	18,100	2.38
3698584	25HBC330(A,W)**30	CNPH*3617A**	58ME(B,C)080−12	30,000	11.5	13.5	29,200	3.52	7.7	18,000	2.38
3698585	25HBC330(A,W)**30	CNPH*3617A**	58ME(B,C)080−16	30,000	11.5	13.5	29,200	3.56	7.8	18,200	2.38
3698582	25HBC330(A,W)**30	CNPH*3617A**	58MEB040−12	30,000	11.5	13.5	29,200	3.54	7.7	18,000	2.38
3698571	25HBC330(A,W)**30	CNPH*3617A**	58MV(B,C)060−14	30,000	11.5	13.5	29,200	3.50	7.7	18,000	2.36
3698572	25HBC330(A,W)**30	CNPH*3617A**	58MV(B,C)080−14	30,000	11.0	13.2	29,200	3.42	7.7	17,900	2.32
3698573	25HBC330(A,W)**30	CNPH*3617A**	58MV(B,C)080−20	30,000	11.0	13.2	29,200	3.44	7.7	17,900	2.34
3698574	25HBC330(A,W)**30	CNPH*3617A**	58MV(B,C)120−20	30,000	11.5	13.5	29,200	3.48	7.7	17,900	2.36
3698570	25HBC330(A,W)**30	CNPH*3617A**	58MVB040−14	30,000	11.0	13.2	29,200	3.44	7.7	18,000	2.34
3698580	25HBC330(A,W)**30	CNPH*3617A**	58PH*070−16	30,000	11.0	13.2	29,200	3.46	7.7	18,200	2.34
3698581	25HBC330(A,W)**30	CNPH*3617A**	58PH*090−16	30,000	11.0	13.2	29,200	3.50	7.7	18,100	2.36
3698659	25HBC330(A,W)**30	CNPH*3617A**	58VLR105−12	30,000	11.0	13.2	29,000	3.48	7.7	18,100	2.36
3698497	25HBC330(A,W)**30	CNPV*3014A**	58CV(A,X)070−12	30,000	11.0	13.0	29,200	3.42	7.7	18,000	2.32
3698499	25HBC330(A,W)**30	CNPV*3017A**	58CV(A,X)090−16	30,000	11.5	13.5	29,200	3.46	7.7	17,900	2.36
3698502	25HBC330(A,W)**30	CNPV*3017A**	58ME(B,C)060−12	30,000	11.5	13.5	29,200	3.54	7.7	18,100	2.38
3698503	25HBC330(A,W)**30	CNPV*3017A**	58ME(B,C)080−12	30,000	11.5	13.5	29,200	3.52	7.7	18,000	2.38
3698504	25HBC330(A,W)**30	CNPV*3017A**	58ME(B,C)080−16	30,000	11.5	13.5	29,200	3.56	7.8	18,200	2.38
3698501	25HBC330(A,W)**30	CNPV*3017A**	58MEB040−12	30,000	11.5	13.5	29,200	3.54	7.7	18,000	2.38
3698498	25HBC330(A,W)**30	CNPV*3017A**	58MV(B,C)060−14	30,000	11.5	13.5	29,200	3.50	7.7	18,000	2.36
3698500	25HBC330(A,W)**30	CNPV*3017A**	58PH*070−16	30,000	11.0	13.2	29,200	3.46	7.7	18,200	2.34
3699427	25HBC330(A,W)**30	CNPV*3017A**	58UVB060−14	30,000	11.5	13.5	29,200	3.50	7.7	18,000	2.36
3698650	25HBC330(A,W)**30	CNPV*3017A**	58VLR105−12	30,000	11.0	13.2	29,000	3.48	7.7	18,100	2.36
3698506	25HBC330(A,W)**30	CNPV*3117A**	58CV(A,X)090−16	30,000	11.5	13.5	29,200	3.60	7.8	18,000	2.42
3698509	25HBC330(A,W)**30	CNPV*3117A**	58ME(B,C)060−12	30,000	11.5	13.5	29,200	3.72	8.0	18,300	2.44
3698510	25HBC330(A,W)**30	CNPV*3117A**	58ME(B,C)080−12	30,000	11.5	13.5	29,200	3.70	7.8	18,200	2.44
3698511	25HBC330(A,W)**30	CNPV*3117A**	58ME(B,C)080−16	30,000	11.5	13.5	29,200	3.74	7.8	18,400	2.44
3698508	25HBC330(A,W)**30	CNPV*3117A**	58MEB040−12	30,000	11.5	14.0	29,200	3.72	8.0	18,200	2.44
3698505	25HBC330(A,W)**30	CNPV*3117A**	58MV(B,C)060−14	30,000	11.5	13.5	29,200	3.64	7.8	18,100	2.42
3698507	25HBC330(A,W)**30	CNPV*3117A**	58PH*070−16	30,000	11.5	13.5	29,200	3.62	7.8	18,300	2.40
3699428	25HBC330(A,W)**30	CNPV*3117A**	58UVB060−14	30,000	11.5	13.5	29,200	3.64	7.8	18,100	2.42
3698652	25HBC330(A,W)**30	CNPV*3117A**	58VLR105−12	30,000	11.5	13.5	29,000	3.64	7.7	18,200	2.42
3698651	25HBC330(A,W)**30	CNPV*3117A**	58VMR105−12	30,000	11.5	13.5	29,000	3.54	7.7	18,000	2.38
3698513	25HBC330(A,W)**30	CNPV*3617A**	58CV(A,X)090−16	30,000	11.5	13.5	29,200	3.46	7.7	17,900	2.36
3698516	25HBC330(A,W)**30	CNPV*3617A**	58ME(B,C)060−12	30,000	11.5	13.5	29,200	3.54	7.7	18,100	2.38
3698517	25HBC330(A,W)**30	CNPV*3617A**	58ME(B,C)080−12	30,000	11.5	13.5	29,200	3.52	7.7	18,000	2.38
3698518	25HBC330(A,W)**30	CNPV*3617A**	58ME(B,C)080−16	30,000	11.5	13.5	29,200	3.56	7.7	18,200	2.38
3698515	25HBC330(A,W)**30	CNPV*3617A**	58MEB040−12	30,000	11.5	13.5	29,200	3.54	7.7	18,000	2.38
3698512	25HBC330(A,W)**30	CNPV*3617A**	58MV(B,C)060−14	30,000	11.5	13.5	29,200	3.50	7.7	18,000	2.36
3698514	25HBC330(A,W)**30	CNPV*3617A**	58PH*070−16	30,000	11.0	13.2	29,200	3.46	7.7	18,200	2.34
3699429	25HBC330(A,W)**30	CNPV*3617A**	58UVB060−14	30,000	11.5	13.5	29,200	3.50	7.7	18,000	2.36
3698653	25HBC330(A,W)**30	CNPV*3617A**	58VLR105−12	30,000	11.0	13.2	29,000	3.48	7.7	18,100	2.36
3698521	25HBC330(A,W)**30	CNPV*3621A**	58CV(A,X)110−20	30,000	11.5	13.5	29,200	3.48	7.7	17,900	2.36
3698519	25HBC330(A,W)**30	CNPV*3621A**	58MV(B,C)080−14	30,000	11.0	13.2	29,200	3.42	7.7	17,900	2.34
3698520	25HBC330(A,W)**30	CNPV*3621A**	58MV(B,C)080−20	30,000	11.0	13.5	29,200	3.46	7.7	17,900	2.34
3698522	25HBC330(A,W)**30	CNPV*3621A**	58PH*090−16	30,000	11.0	13.2	29,200	3.50	7.7	18,100	2.36
3699430	25HBC330(A,W)**30	CNPV*3621A**	58UVB080−14	30,000	11.0	13.2	29,200	3.42	7.7	17,900	2.34
3699431	25HBC330(A,W)**30	CNPV*3621A**	58UVB080−20	30,000	11.0	13.5	29,200	3.46	7.7	17,900	2.34
3698524	25HBC330(A,W)**30	CNPV*3717A**	58CV(A,X)090−16	30,000	11.5	14.0	29,200	3.72	8.0	18,100	2.44
3698527	25HBC330(A,W)**30	CNPV*3717A**	58ME(B,C)060−12	30,000	11.5	14.0	29,200	3.82	8.0	18,400	2.48
3698528	25HBC330(A,W)**30	CNPV*3717A**	58ME(B,C)080−12	30,000	11.5	14.0	29,200	3.80	8.0	18,300	2.46
3698529	25HBC330(A,W)**30	CNPV*3717A**	58ME(B,C)080−16	30,000	11.5	14.0	29,200	3.82	8.0	18,500	2.48
3698526	25HBC330(A,W)**30	CNPV*3717A**	58MEB040−12	30,000	11.5	14.0	29,200	3.82	8.0	18,300	2.48
3698523	25HBC330(A,W)**30	CNPV*3717A**	58MV(B,C)060−14	30,000	11.5	14.0	29,200	3.74	8.0	18,200	2.44
3698525	25HBC330(A,W)**30	CNPV*3717A**	58PH*070−16	30,000	11.5	13.5	29,200	3.74	8.0	18,400	2.44
3699432	25HBC330(A,W)**30	CNPV*3717A**	58UVB060−14	30,000	11.5	14.0	29,200	3.74	8.0	18,200	2.44
3698655	25HBC330(A,W)**30	CNPV*3717A**	58VLR105−12	30,000	11.5	13.5	29,000	3.74	7.7	18,300	2.44
3698654	25HBC330(A,W)**30	CNPV*3717A**	58VMR105−12	30,000	11.5	13.5	29,000	3.64	7.8	18,000	2.42
3698594	25HBC330(A,W)**30	CSPH*3012A**	58CV(A,X)070−12	30,000	11.0	13.5	29,200	3.46	7.7	18,000	2.34
3698595	25HBC330(A,W)**30	CSPH*3012A**	58CV(A,X)090−16	30,000	11.5	13.5	29,200	3.46	7.7	17,900	2.36
3698596	25HBC330(A,W)**30	CSPH*3012A**	58CV(A,X)110−20	30,000	11.5	13.5	29,200	3.48	7.7	18,000	2.36
3698597	25HBC330(A,W)**30	CSPH*3012A**	58CV(A,X)135−22	30,000	11.5	13.5	29,200	3.48	7.7	17,900	2.36
3698598	25HBC330(A,W)**30	CSPH*3012A**	58CV(A,X)155−22	30,000	11.5	13.5	29,200	3.48	7.7	17,900	2.36
3698605	25HBC330(A,W)**30	CSPH*3012A**	58HDV060−−12	30,000	11.0	13.0	29,200	3.46	7.7	18,300	2.32
3698606	25HBC330(A,W)**30	CSPH*3012A**	58HDV080−−20	30,000	11.0	13.2	29,200	3.54	7.7	18,300	2.38
3698607	25HBC330(A,W)**30	CSPH*3012A**	58HDV100−−20	30,000	11.5	13.5	29,200	3.48	7.7	18,100	2.36
3698602	25HBC330(A,W)**30	CSPH*3012A**	58ME(B,C)060−12	30,000	11.5	13.5	29,200	3.54	7.7	18,100	2.38
3698603	25HBC330(A,W)**30	CSPH*3012A**	58ME(B,C)080−12	30,000	11.5	13.5	29,200	3.52	7.7	18,000	2.38
3698604	25HBC330(A,W)**30	CSPH*3012A**	58ME(B,C)080−16	30,000	11.5	13.5	29,200	3.54	7.7	18,200	2.38
3698601	25HBC330(A,W)**30	CSPH*3012A**	58MEB040−12	30,000	11.5	13.5	29,200	3.52	7.7	18,100	2.38
3698590	25HBC330(A,W)**30	CSPH*3012A**	58MV(B,C)060−14	30,000	11.5	13.5	29,200	3.50	7.7	18,100	2.36
3698591	25HBC330(A,W)**30	CSPH*3012A**	58MV(B,C)080−14	30,000	11.0	13.2	29,200	3.42	7.7	18,000	2.32
3698592	25HBC330(A,W)**30	CSPH*3012A**	58MV(B,C)080−20	30,000	11.0	13.2	29,200	3.46	7.7	18,000	2.34
3698593	25HBC330(A,W)**30	CSPH*3012A**	58MV(B,C)120−20	30,000	11.5	13.5	29,200	3.48	7.7	17,900	2.36
3698589	25HBC330(A,W)**30	CSPH*3012A**	58MVB040−14	30,000	11.0	13.2	29,200	3.44	7.7	18,000	2.34
3698599	25HBC330(A,W)**30	CSPH*3012A**	58PH*070−16	30,000	11.0	13.2	29,200	3.46	7.7	18,200	2.34
3698600	25HBC330(A,W)**30	CSPH*3012A**	58PH*090−16	30,000	11.5	13.2	29,200	3.48	7.7	18,100	2.36
3698660	25HBC330(A,W)**30	CSPH*3012A**	58VLR105−12	30,000	11.0	13.2	29,000	3.50	7.7	18,100	2.36
3698614	25HBC330(A,W)**30	CSPH*3612A**	58CV(A,X)070−12	30,000	11.5	13.5	29,200	3.54	7.7	18,100	2.38

See notes on page 45

COMBINATION RATINGS CONTINUED

AHRI Ref. No.	Model Number	Coil Model Number	Furnace Model Number	Cooling Capacity	EER	SEER	High Temp		HSPF	Low Temp	
							E Capacity	E COP		H Capacity	H COP
3698615	25HBC330(A,W)**30	CSPH*3612A**	58CV(A,X)090−16	30,000	11.5	13.5	29,200	3.58	7.7	18,000	2.40
3698616	25HBC330(A,W)**30	CSPH*3612A**	58CV(A,X)110−20	30,000	11.5	13.5	29,200	3.58	7.7	18,000	2.40
3698617	25HBC330(A,W)**30	CSPH*3612A**	58CV(A,X)135−22	30,000	11.5	13.5	29,200	3.58	7.8	18,000	2.40
3698618	25HBC330(A,W)**30	CSPH*3612A**	58CV(A,X)155−22	30,000	11.5	14.0	29,200	3.60	7.8	18,000	2.40
3698625	25HBC330(A,W)**30	CSPH*3612A**	58HDV040−−12	30,000	11.0	13.2	29,200	3.54	7.7	18,400	2.36
3698626	25HBC330(A,W)**30	CSPH*3612A**	58HDV060−−12	30,000	11.0	13.2	30,000	3.60	7.7	18,500	2.38
3698627	25HBC330(A,W)**30	CSPH*3612A**	58HDV080−−20	30,000	11.5	13.5	30,000	3.70	8.0	18,400	2.44
3698628	25HBC330(A,W)**30	CSPH*3612A**	58HDV100−−20	30,000	11.5	13.5	29,200	3.64	7.8	18,200	2.42
3698622	25HBC330(A,W)**30	CSPH*3612A**	58ME(B,C)060−12	30,000	11.5	13.5	29,200	3.68	7.8	18,200	2.44
3698623	25HBC330(A,W)**30	CSPH*3612A**	58ME(B,C)080−12	30,000	11.5	13.5	29,200	3.64	7.7	18,200	2.42
3698624	25HBC330(A,W)**30	CSPH*3612A**	58ME(B,C)080−16	30,000	11.5	13.5	29,200	3.70	8.0	18,400	2.44
3698621	25HBC330(A,W)**30	CSPH*3612A**	58MEB040−12	30,000	11.5	13.5	29,200	3.66	7.8	18,200	2.44
3698609	25HBC330(A,W)**30	CSPH*3612A**	58MV(B,C)060−14	30,000	11.5	13.5	29,200	3.60	7.8	18,100	2.40
3698610	25HBC330(A,W)**30	CSPH*3612A**	58MV(B,C)080−14	30,000	11.5	13.5	29,200	3.52	7.7	18,000	2.38
3698611	25HBC330(A,W)**30	CSPH*3612A**	58MV(B,C)080−20	30,000	11.5	13.5	29,200	3.56	7.7	18,000	2.38
3698612	25HBC330(A,W)**30	CSPH*3612A**	58MV(B,C)100−20	30,000	11.5	13.5	29,200	3.50	7.7	17,900	2.36
3698613	25HBC330(A,W)**30	CSPH*3612A**	58MV(B,C)120−20	30,000	11.5	13.5	29,200	3.58	7.8	18,000	2.40
3698608	25HBC330(A,W)**30	CSPH*3612A**	58MVB040−14	30,000	11.5	13.5	29,200	3.54	7.7	18,100	2.38
3698619	25HBC330(A,W)**30	CSPH*3612A**	58PH*070−16	30,000	11.5	13.5	29,200	3.58	7.8	18,300	2.38
3698620	25HBC330(A,W)**30	CSPH*3612A**	58PH*090−16	30,000	11.5	13.5	29,200	3.62	7.8	18,200	2.42
3698662	25HBC330(A,W)**30	CSPH*3612A**	58VLR105−12	30,000	11.5	13.5	29,000	3.60	7.7	18,200	2.40
3698661	25HBC330(A,W)**30	CSPH*3612A**	58VMR105−12	30,000	11.5	13.5	29,000	3.50	7.7	17,900	2.36
3700899	25HBC330A**50	†FY5BNF030		30,000	11.0	13.0	30,000	3.52	7.7	18,500	2.34
3701055	25HBC330A**50	FB4CNF030		30,000	11.0	13.0	30,000	3.52	7.7	18,300	2.34
3701072	25HBC330A**50	FB4CNF030+TXV		30,000	11.0	13.2	30,000	3.52	7.7	18,300	2.34
3701056	25HBC330A**50	FB4CNF036		30,000	11.0	13.0	30,000	3.52	7.7	18,300	2.34
3701073	25HBC330A**50	FB4CNF036+TXV		30,000	11.0	13.2	30,000	3.52	7.7	18,300	2.34
3701060	25HBC330A**50	FE4AN(B,F)003+UI		30,000	11.5	13.5	29,200	3.54	7.7	17,800	2.38
3701061	25HBC330A**50	FE4AN(B,F)005+UI		30,000	11.5	14.0	29,200	3.72	8.0	18,000	2.46
3701059	25HBC330A**50	FE4ANF002+UI		30,000	11.5	13.5	29,200	3.54	7.7	18,000	2.36
3701062	25HBC330A**50	FF1ENP031		30,000	11.0	13.0	29,600	3.50	7.7	18,300	2.36
3701063	25HBC330A**50	FF1ENP037		30,000	11.0	13.2	30,000	3.50	7.7	18,500	2.36
3701065	25HBC330A**50	FV4BN(B,F)003		30,000	11.5	13.5	29,200	3.54	7.7	17,800	2.38
3701066	25HBC330A**50	FV4BN(B,F)005		30,000	11.5	14.0	29,000	3.72	8.0	18,000	2.46
3701064	25HBC330A**50	FV4BNF002		30,000	11.5	13.5	29,200	3.54	7.7	18,000	2.36
3701068	25HBC330A**50	FV4CN(B,F)003		30,000	11.5	13.5	29,200	3.54	7.7	17,800	2.38
3701069	25HBC330A**50	FV4CN(B,F)005		30,000	11.5	14.0	29,000	3.72	8.0	18,000	2.46
3701067	25HBC330A**50	FV4CNF002		30,000	11.5	13.5	29,200	3.54	7.7	18,000	2.36
3701071	25HBC330A**50	FX4CN(B,F)036		30,000	11.0	13.2	29,200	3.52	7.7	18,500	2.36
3701070	25HBC330A**50	FX4CNF030		30,000	11.0	13.2	29,200	3.54	7.7	18,300	2.36
3701057	25HBC330A**50	FX4DN(B,F)031		30,000	11.5	13.5	29,200	3.60	7.8	18,300	2.40
3701058	25HBC330A**50	FX4DN(B,F)037		30,000	11.5	14.0	30,000	3.72	8.0	18,300	2.44
3701074	25HBC330A**50	FY5BNF030+TXV		30,000	11.0	13.2	30,000	3.52	7.7	18,500	2.34
3700900	25HBC330A**50	CAP**3014A**	58CV(A,X)070−12	30,000	11.0	13.0	29,200	3.42	7.7	18,000	2.32
3700902	25HBC330A**50	CAP**3017A**	58CV(A,X)090−16	30,000	11.5	13.5	29,200	3.46	7.7	17,800	2.36
3700905	25HBC330A**50	CAP**3017A**	58ME(B,C)060−12	30,000	11.5	13.5	29,200	3.54	7.8	18,100	2.38
3700906	25HBC330A**50	CAP**3017A**	58ME(B,C)080−12	30,000	11.5	13.5	29,200	3.52	7.7	18,000	2.38
3700907	25HBC330A**50	CAP**3017A**	58ME(B,C)080−16	30,000	11.5	13.5	29,200	3.56	7.7	18,200	2.38
3700904	25HBC330A**50	CAP**3017A**	58MEB040−12	30,000	11.5	13.5	29,200	3.54	7.8	18,000	2.38
3700901	25HBC330A**50	CAP**3017A**	58MV(B,C)060−14	30,000	11.0	13.5	29,200	3.48	7.7	18,000	2.36
3700903	25HBC330A**50	CAP**3017A**	58PH*070−16	30,000	11.0	13.2	29,200	3.46	7.7	18,200	2.34
3701853	25HBC330A**50	CAP**3017A**	58UVB060−14	30,000	11.0	13.5	29,200	3.48	7.7	18,000	2.36
3701075	25HBC330A**50	CAP**3017A**	58VLR105−12	30,000	11.0	13.2	29,000	3.48	7.7	18,000	2.36
3700908	25HBC330A**50	CAP**3614A**	58CV(A,X)070−12	30,000	11.0	13.2	29,200	3.44	7.7	18,000	2.34
3700910	25HBC330A**50	CAP**3617A**	58CV(A,X)090−16	30,000	11.5	13.5	29,200	3.48	7.7	17,800	2.36
3700913	25HBC330A**50	CAP**3617A**	58ME(B,C)060−12	30,000	11.5	13.5	29,200	3.58	7.8	18,100	2.40
3700914	25HBC330A**50	CAP**3617A**	58ME(B,C)080−12	30,000	11.5	13.5	29,200	3.56	7.7	18,100	2.38
3700915	25HBC330A**50	CAP**3617A**	58ME(B,C)080−16	30,000	11.5	13.5	29,200	3.58	7.8	18,300	2.40
3700912	25HBC330A**50	CAP**3617A**	58MEB040−12	30,000	11.5	13.5	29,200	3.58	7.8	18,100	2.40
3700909	25HBC330A**50	CAP**3617A**	58MV(B,C)060−14	30,000	11.5	13.5	29,200	3.50	7.7	18,000	2.38
3700911	25HBC330A**50	CAP**3617A**	58PH*070−16	30,000	11.0	13.2	29,200	3.50	7.7	18,200	2.36
3701854	25HBC330A**50	CAP**3617A**	58UVB060−14	30,000	11.5	13.5	29,200	3.50	7.7	18,000	2.38
3701077	25HBC330A**50	CAP**3617A**	58VLR105−12	30,000	11.0	13.2	29,000	3.50	7.7	18,100	2.36
3701076	25HBC330A**50	CAP**3617A**	58VMR105−12	29,800	11.0	13.2	29,000	3.42	7.7	17,800	2.34
3700921	25HBC330A**50	CAP**3619A**	58HDV040−−12	30,000	11.0	13.0	29,200	3.46	7.7	18,300	2.32
3700922	25HBC330A**50	CAP**3619A**	58HDV060−−12	30,000	11.0	13.2	29,200	3.50	7.7	18,400	2.36
3700919	25HBC330A**50	CAP**3621A**	58CV(A,X)110−20	30,000	11.5	13.5	29,200	3.50	7.7	17,900	2.38
3700916	25HBC330A**50	CAP**3621A**	58MV(B,C)080−14	30,000	11.5	13.5	29,200	3.46	7.7	17,800	2.34
3700917	25HBC330A**50	CAP**3621A**	58MV(B,C)080−20	30,000	11.5	13.5	29,200	3.48	7.7	17,900	2.36
3700918	25HBC330A**50	CAP**3621A**	58MV(B,C)100−20	30,000	11.0	13.2	29,200	3.42	7.7	17,800	2.34
3700920	25HBC330A**50	CAP**3621A**	58PH*090−16	30,000	11.5	13.5	29,200	3.56	7.8	18,100	2.40
3701855	25HBC330A**50	CAP**3621A**	58UVB080−14	30,000	11.5	13.5	29,200	3.46	7.7	17,800	2.34
3701856	25HBC330A**50	CAP**3621A**	58UVB080−20	30,000	11.5	13.5	29,200	3.48	7.7	17,900	2.36
3701857	25HBC330A**50	CAP**3621A**	58UVB100−20	30,000	11.0	13.2	29,200	3.42	7.7	17,800	2.34
3700961	25HBC330A**50	CNPH*3017A**	58CV(A,X)070−12	30,000	11.0	13.2	29,200	3.44	7.7	18,000	2.34
3700962	25HBC330A**50	CNPH*3017A**	58CV(A,X)090−16	30,000	11.5	13.5	29,200	3.46	7.7	17,900	2.36
3700963	25HBC330A**50	CNPH*3017A**	58CV(A,X)110−20	30,000	11.5	13.5	29,200	3.48	7.7	17,900	2.36
3700964	25HBC330A**50	CNPH*3017A**	58CV(A,X)135−22	30,000	11.5	13.5	29,200	3.48	7.7	17,900	2.36
3700965	25HBC330A**50	CNPH*3017A**	58CV(A,X)155−22	30,000	11.5	13.5	29,200	3.48	7.7	17,900	2.36
3700972	25HBC330A**50	CNPH*3017A**	58HDV060−−12	30,000	11.0	13.0	29,200	3.46	7.7	18,300	2.34
3700973	25HBC330A**50	CNPH*3017A**	58HDV080−−20	30,000	11.0	13.2	29,200	3.54	7.7	18,300	2.38
3700974	25HBC330A**50	CNPH*3017A**	58HDV100−−20	30,000	11.5	13.5	29,200	3.50	7.7	18,100	2.36
3700969	25HBC330A**50	CNPH*3017A**	58ME(B,C)060−12	30,000	11.5	13.5	29,200	3.54	7.7	18,100	2.38
3700970	25HBC330A**50	CNPH*3017A**	58ME(B,C)080−12	30,000	11.5	13.5	29,200	3.52	7.7	18,000	2.38
3700971	25HBC330A**50	CNPH*3017A**	58ME(B,C)080−16	30,000	11.5	13.5	29,200	3.56	7.8	18,200	2.38
3700968	25HBC330A**50	CNPH*3017A**	58MEB040−12	30,000	11.5	13.5	29,200	3.54	7.7	18,000	2.38

See notes on page 45

COMBINATION RATINGS CONTINUED

AHRI Ref. No.	Model Number	Coil Model Number	Furnace Model Number	Cooling Capacity	EER	SEER	High Temp		HSPF	Low Temp	
							E Capacity	E COP		H Capacity	H COP
3700957	25HBC330A**50	CNPH*3017A**	58MV(B,C)060−14	30,000	11.5	13.5	29,200	3.50	7.7	18,000	2.36
3700958	25HBC330A**50	CNPH*3017A**	58MV(B,C)080−14	30,000	11.0	13.2	29,200	3.42	7.7	17,900	2.32
3700959	25HBC330A**50	CNPH*3017A**	58MV(B,C)080−20	30,000	11.0	13.5	29,200	3.44	7.7	17,900	2.34
3700960	25HBC330A**50	CNPH*3017A**	58MV(B,C)120−20	30,000	11.5	13.5	29,200	3.48	7.7	17,900	2.36
3700956	25HBC330A**50	CNPH*3017A**	58MVB040−14	30,000	11.0	13.2	29,200	3.44	7.7	18,000	2.34
3700966	25HBC330A**50	CNPH*3017A**	58PH*070−16	30,000	11.0	13.2	29,200	3.46	7.7	18,200	2.34
3700967	25HBC330A**50	CNPH*3017A**	58PH*090−16	30,000	11.5	13.5	29,200	3.50	7.7	18,100	2.36
3701084	25HBC330A**50	CNPH*3017A**	58VLR105−12	30,000	11.0	13.2	29,000	3.48	7.7	18,100	2.36
3700981	25HBC330A**50	CNPH*3117A**	58CV(A,X)070−12	30,000	11.5	13.5	29,200	3.58	7.7	18,100	2.40
3700982	25HBC330A**50	CNPH*3117A**	58CV(A,X)090−16	30,000	11.5	13.5	29,200	3.60	7.7	18,000	2.42
3700983	25HBC330A**50	CNPH*3117A**	58CV(A,X)110−20	30,000	11.5	13.5	29,200	3.62	7.7	18,100	2.42
3700984	25HBC330A**50	CNPH*3117A**	58CV(A,X)135−22	30,000	11.5	13.5	29,200	3.62	7.7	18,000	2.42
3700985	25HBC330A**50	CNPH*3117A**	58CV(A,X)155−22	30,000	11.5	14.0	29,200	3.64	7.8	18,000	2.42
3700992	25HBC330A**50	CNPH*3117A**	58HDV040−−12	30,000	11.0	13.2	30,000	3.58	7.8	18,500	2.38
3700993	25HBC330A**50	CNPH*3117A**	58HDV060−−12	30,000	11.0	13.2	30,000	3.64	7.8	18,500	2.40
3700994	25HBC330A**50	CNPH*3117A**	58HDV080−−20	30,000	11.5	13.5	30,000	3.74	8.0	18,500	2.44
3700995	25HBC330A**50	CNPH*3117A**	58HDV100−−20	30,000	11.5	13.5	29,200	3.68	7.8	18,200	2.44
3700989	25HBC330A**50	CNPH*3117A**	58ME(B,C)060−12	30,000	11.5	13.5	29,200	3.72	8.0	18,300	2.44
3700990	25HBC330A**50	CNPH*3117A**	58ME(B,C)080−12	30,000	11.5	13.5	29,200	3.70	7.8	18,200	2.44
3700991	25HBC330A**50	CNPH*3117A**	58ME(B,C)080−16	30,000	11.5	13.5	30,000	3.74	8.0	18,400	2.46
3700988	25HBC330A**50	CNPH*3117A**	58MEB040−12	30,000	11.5	13.5	29,200	3.72	8.0	18,200	2.44
3700976	25HBC330A**50	CNPH*3117A**	58MV(B,C)060−14	30,000	11.5	13.5	29,200	3.64	7.8	18,100	2.42
3700977	25HBC330A**50	CNPH*3117A**	58MV(B,C)080−14	30,000	11.5	13.5	29,200	3.56	7.7	18,000	2.38
3700978	25HBC330A**50	CNPH*3117A**	58MV(B,C)080−20	30,000	11.5	13.5	29,200	3.60	7.8	18,100	2.40
3700979	25HBC330A**50	CNPH*3117A**	58MV(B,C)100−20	30,000	11.5	13.5	29,200	3.54	7.7	18,000	2.38
3700980	25HBC330A**50	CNPH*3117A**	58MV(B,C)120−20	30,000	11.5	13.5	29,200	3.62	7.8	18,000	2.42
3700975	25HBC330A**50	CNPH*3117A**	58MVB040−14	30,000	11.5	13.5	29,200	3.58	7.7	18,100	2.40
3700986	25HBC330A**50	CNPH*3117A**	58PH*070−16	30,000	11.5	13.5	29,200	3.64	7.8	18,400	2.40
3700987	25HBC330A**50	CNPH*3117A**	58PH*090−16	30,000	11.5	13.5	29,200	3.68	8.0	18,300	2.42
3701086	25HBC330A**50	CNPH*3117A**	58VLR105−12	30,000	11.5	13.5	29,000	3.64	7.8	18,200	2.42
3701085	25HBC330A**50	CNPH*3117A**	58VMR105−12	30,000	11.5	13.5	29,000	3.54	7.7	18,000	2.38
3701001	25HBC330A**50	CNPH*3617A**	58CV(A,X)070−12	30,000	11.0	13.2	29,200	3.44	7.7	18,000	2.34
3701002	25HBC330A**50	CNPH*3617A**	58CV(A,X)090−16	30,000	11.5	13.5	29,200	3.46	7.7	17,900	2.36
3701003	25HBC330A**50	CNPH*3617A**	58CV(A,X)110−20	30,000	11.5	13.5	29,200	3.48	7.7	17,900	2.36
3701004	25HBC330A**50	CNPH*3617A**	58CV(A,X)135−22	30,000	11.5	13.5	29,200	3.48	7.7	17,900	2.36
3701005	25HBC330A**50	CNPH*3617A**	58CV(A,X)155−22	30,000	11.5	13.5	29,200	3.48	7.7	17,900	2.36
3701012	25HBC330A**50	CNPH*3617A**	58HDV060−−12	30,000	11.0	13.0	29,200	3.46	7.7	18,300	2.34
3701013	25HBC330A**50	CNPH*3617A**	58HDV080−−20	30,000	11.0	13.2	29,200	3.54	7.7	18,300	2.38
3701014	25HBC330A**50	CNPH*3617A**	58HDV100−−20	30,000	11.5	13.5	29,200	3.50	7.7	18,100	2.36
3701009	25HBC330A**50	CNPH*3617A**	58ME(B,C)060−12	30,000	11.5	13.5	29,200	3.54	7.7	18,100	2.38
3701010	25HBC330A**50	CNPH*3617A**	58ME(B,C)080−12	30,000	11.5	13.5	29,200	3.52	7.7	18,000	2.38
3701011	25HBC330A**50	CNPH*3617A**	58ME(B,C)080−16	30,000	11.5	13.5	29,200	3.56	7.8	18,200	2.38
3701008	25HBC330A**50	CNPH*3617A**	58MEB040−12	30,000	11.5	13.5	29,200	3.54	7.7	18,000	2.38
3700997	25HBC330A**50	CNPH*3617A**	58MV(B,C)060−14	30,000	11.5	13.5	29,200	3.50	7.7	18,000	2.36
3700998	25HBC330A**50	CNPH*3617A**	58MV(B,C)080−14	30,000	11.0	13.2	29,200	3.42	7.7	17,900	2.32
3700999	25HBC330A**50	CNPH*3617A**	58MV(B,C)080−20	30,000	11.0	13.2	29,200	3.44	7.7	17,900	2.34
3701000	25HBC330A**50	CNPH*3617A**	58MV(B,C)120−20	30,000	11.5	13.5	29,200	3.48	7.7	17,900	2.36
3700996	25HBC330A**50	CNPH*3617A**	58MVB040−14	30,000	11.0	13.2	29,200	3.44	7.7	18,000	2.34
3701006	25HBC330A**50	CNPH*3617A**	58PH*070−16	30,000	11.0	13.2	29,200	3.46	7.7	18,200	2.34
3701007	25HBC330A**50	CNPH*3617A**	58PH*090−16	30,000	11.0	13.2	29,200	3.50	7.7	18,100	2.36
3701087	25HBC330A**50	CNPH*3617A**	58VLR105−12	30,000	11.0	13.2	29,000	3.48	7.7	18,100	2.36
3700923	25HBC330A**50	CNPV*3014A**	58CV(A,X)070−12	30,000	11.0	13.0	29,200	3.42	7.7	18,000	2.32
3700925	25HBC330A**50	CNPV*3017A**	58CV(A,X)090−16	30,000	11.5	13.5	29,200	3.46	7.7	17,900	2.36
3700928	25HBC330A**50	CNPV*3017A**	58ME(B,C)060−12	30,000	11.5	13.5	29,200	3.54	7.7	18,100	2.38
3700929	25HBC330A**50	CNPV*3017A**	58ME(B,C)080−12	30,000	11.5	13.5	29,200	3.52	7.7	18,000	2.38
3700930	25HBC330A**50	CNPV*3017A**	58ME(B,C)080−16	30,000	11.5	13.5	29,200	3.56	7.8	18,200	2.38
3700927	25HBC330A**50	CNPV*3017A**	58MEB040−12	30,000	11.5	13.5	29,200	3.54	7.7	18,000	2.38
3700924	25HBC330A**50	CNPV*3017A**	58MV(B,C)060−14	30,000	11.5	13.5	29,200	3.50	7.7	18,000	2.36
3700926	25HBC330A**50	CNPV*3017A**	58PH*070−16	30,000	11.0	13.2	29,200	3.46	7.7	18,200	2.34
3701858	25HBC330A**50	CNPV*3017A**	58UVB060−14	30,000	11.5	13.5	29,200	3.50	7.7	18,000	2.36
3701078	25HBC330A**50	CNPV*3017A**	58VLR105−12	30,000	11.0	13.2	29,000	3.48	7.7	18,100	2.36
3700932	25HBC330A**50	CNPV*3117A**	58CV(A,X)090−16	30,000	11.5	13.5	29,200	3.60	7.8	18,000	2.42
3700935	25HBC330A**50	CNPV*3117A**	58ME(B,C)060−12	30,000	11.5	13.5	29,200	3.72	8.0	18,300	2.44
3700936	25HBC330A**50	CNPV*3117A**	58ME(B,C)080−12	30,000	11.5	13.5	29,200	3.70	7.8	18,200	2.44
3700937	25HBC330A**50	CNPV*3117A**	58ME(B,C)080−16	30,000	11.5	13.5	29,200	3.74	7.8	18,400	2.44
3700934	25HBC330A**50	CNPV*3117A**	58MEB040−12	30,000	11.5	14.0	29,200	3.72	8.0	18,200	2.44
3700931	25HBC330A**50	CNPV*3117A**	58MV(B,C)060−14	30,000	11.5	13.5	29,200	3.64	7.8	18,100	2.42
3700933	25HBC330A**50	CNPV*3117A**	58PH*070−16	30,000	11.5	13.5	29,200	3.62	7.8	18,300	2.40
3701859	25HBC330A**50	CNPV*3117A**	58UVB060−14	30,000	11.5	13.5	29,200	3.64	7.8	18,100	2.42
3701080	25HBC330A**50	CNPV*3117A**	58VLR105−12	30,000	11.5	13.5	29,000	3.64	7.7	18,200	2.42
3701079	25HBC330A**50	CNPV*3117A**	58VMR105−12	30,000	11.5	13.5	29,000	3.54	7.7	18,000	2.38
3700939	25HBC330A**50	CNPV*3617A**	58CV(A,X)090−16	30,000	11.5	13.5	29,200	3.46	7.7	17,900	2.36
3700942	25HBC330A**50	CNPV*3617A**	58ME(B,C)060−12	30,000	11.5	13.5	29,200	3.54	7.7	18,100	2.38
3700943	25HBC330A**50	CNPV*3617A**	58ME(B,C)080−12	30,000	11.5	13.5	29,200	3.52	7.7	18,000	2.38
3700944	25HBC330A**50	CNPV*3617A**	58ME(B,C)080−16	30,000	11.5	13.5	29,200	3.56	7.7	18,200	2.38
3700941	25HBC330A**50	CNPV*3617A**	58MEB040−12	30,000	11.5	13.5	29,200	3.54	7.7	18,000	2.38
3700938	25HBC330A**50	CNPV*3617A**	58MV(B,C)060−14	30,000	11.5	13.5	29,200	3.50	7.7	18,000	2.36
3700940	25HBC330A**50	CNPV*3617A**	58PH*070−16	30,000	11.0	13.2	29,200	3.46	7.7	18,200	2.34
3701860	25HBC330A**50	CNPV*3617A**	58UVB060−14	30,000	11.5	13.5	29,200	3.50	7.7	18,000	2.36
3701081	25HBC330A**50	CNPV*3617A**	58VLR105−12	30,000	11.0	13.2	29,000	3.48	7.7	18,100	2.36
3700947	25HBC330A**50	CNPV*3621A**	58CV(A,X)110−20	30,000	11.5	13.5	29,200	3.48	7.7	17,900	2.36
3700945	25HBC330A**50	CNPV*3621A**	58MV(B,C)080−14	30,000	11.0	13.2	29,200	3.42	7.7	17,900	2.34
3700946	25HBC330A**50	CNPV*3621A**	58MV(B,C)080−20	30,000	11.0	13.5	29,200	3.46	7.7	17,900	2.34
3700948	25HBC330A**50	CNPV*3621A**	58PH*090−16	30,000	11.0	13.2	29,200	3.50	7.7	18,100	2.36
3701861	25HBC330A**50	CNPV*3621A**	58UVB080−14	30,000	11.0	13.2	29,200	3.42	7.7	17,900	2.34
3701862	25HBC330A**50	CNPV*3621A**	58UVB080−20	30,000	11.0	13.5	29,200	3.46	7.7	17,900	2.34
3700950	25HBC330A**50	CNPV*3717A**	58CV(A,X)090−16	30,000	11.5	14.0	29,200	3.72	8.0	18,100	2.44

See notes on page 45

COMBINATION RATINGS CONTINUED

AHRI Ref. No.	Model Number	Coil Model Number	Furnace Model Number	Cooling Capacity	EER	SEER	High Temp		HSPF	Low Temp	
							E Capacity	E COP		H Capacity	H COP
3700953	25HBC330A**50	CNPV*3717A**	58ME(B,C)060−12	30,000	11.5	14.0	29,200	3.82	8.0	18,400	2.48
3700954	25HBC330A**50	CNPV*3717A**	58ME(B,C)080−12	30,000	11.5	14.0	29,200	3.80	8.0	18,300	2.46
3700955	25HBC330A**50	CNPV*3717A**	58ME(B,C)080−16	30,000	11.5	14.0	29,200	3.82	8.0	18,500	2.48
3700952	25HBC330A**50	CNPV*3717A**	58MEB040−12	30,000	11.5	14.0	29,200	3.82	8.0	18,300	2.48
3700949	25HBC330A**50	CNPV*3717A**	58MV(B,C)060−14	30,000	11.5	14.0	29,200	3.74	8.0	18,200	2.44
3700951	25HBC330A**50	CNPV*3717A**	58PH*070−16	30,000	11.5	13.5	29,200	3.74	8.0	18,400	2.44
3701863	25HBC330A**50	CNPV*3717A**	58UVB060−14	30,000	11.5	14.0	29,200	3.74	8.0	18,200	2.44
3701083	25HBC330A**50	CNPV*3717A**	58VLR105−12	30,000	11.5	13.5	29,000	3.74	7.7	18,300	2.44
3701082	25HBC330A**50	CNPV*3717A**	58VMR105−12	30,000	11.5	13.5	29,000	3.64	7.8	18,000	2.42
3701020	25HBC330A**50	CSPH*3012A**	58CV(A,X)070−12	30,000	11.0	13.5	29,200	3.46	7.7	18,000	2.34
3701021	25HBC330A**50	CSPH*3012A**	58CV(A,X)090−16	30,000	11.5	13.5	29,200	3.46	7.7	17,900	2.36
3701022	25HBC330A**50	CSPH*3012A**	58CV(A,X)110−20	30,000	11.5	13.5	29,200	3.48	7.7	18,000	2.36
3701023	25HBC330A**50	CSPH*3012A**	58CV(A,X)135−22	30,000	11.5	13.5	29,200	3.48	7.7	17,900	2.36
3701024	25HBC330A**50	CSPH*3012A**	58CV(A,X)155−22	30,000	11.5	13.5	29,200	3.48	7.7	17,900	2.36
3701031	25HBC330A**50	CSPH*3012A**	58HDV060−−12	30,000	11.0	13.0	29,200	3.46	7.7	18,300	2.32
3701032	25HBC330A**50	CSPH*3012A**	58HDV080−−20	30,000	11.0	13.2	29,200	3.54	7.7	18,300	2.38
3701033	25HBC330A**50	CSPH*3012A**	58HDV100−−20	30,000	11.5	13.5	29,200	3.48	7.7	18,100	2.36
3701028	25HBC330A**50	CSPH*3012A**	58ME(B,C)060−12	30,000	11.5	13.5	29,200	3.54	7.7	18,100	2.38
3701029	25HBC330A**50	CSPH*3012A**	58ME(B,C)080−12	30,000	11.5	13.5	29,200	3.52	7.7	18,000	2.38
3701030	25HBC330A**50	CSPH*3012A**	58ME(B,C)080−16	30,000	11.5	13.5	29,200	3.54	7.7	18,200	2.38
3701027	25HBC330A**50	CSPH*3012A**	58MEB040−12	30,000	11.5	13.5	29,200	3.52	7.7	18,100	2.38
3701016	25HBC330A**50	CSPH*3012A**	58MV(B,C)060−14	30,000	11.5	13.5	29,200	3.50	7.7	18,100	2.36
3701017	25HBC330A**50	CSPH*3012A**	58MV(B,C)080−14	30,000	11.0	13.2	29,200	3.42	7.7	18,000	2.32
3701018	25HBC330A**50	CSPH*3012A**	58MV(B,C)080−20	30,000	11.0	13.2	29,200	3.46	7.7	18,000	2.34
3701019	25HBC330A**50	CSPH*3012A**	58MV(B,C)120−20	30,000	11.5	13.5	29,200	3.48	7.7	17,900	2.36
3701015	25HBC330A**50	CSPH*3012A**	58MVB040−14	30,000	11.0	13.2	29,200	3.44	7.7	18,000	2.34
3701025	25HBC330A**50	CSPH*3012A**	58PH*070−16	30,000	11.0	13.2	29,200	3.46	7.7	18,200	2.34
3701026	25HBC330A**50	CSPH*3012A**	58PH*090−16	30,000	11.5	13.2	29,200	3.48	7.7	18,100	2.36
3701088	25HBC330A**50	CSPH*3012A**	58VLR105−12	30,000	11.0	13.2	29,000	3.50	7.7	18,100	2.36
3701040	25HBC330A**50	CSPH*3612A**	58CV(A,X)070−12	30,000	11.5	13.5	29,200	3.54	7.7	18,100	2.38
3701041	25HBC330A**50	CSPH*3612A**	58CV(A,X)090−16	30,000	11.5	13.5	29,200	3.58	7.7	18,000	2.40
3701042	25HBC330A**50	CSPH*3612A**	58CV(A,X)110−20	30,000	11.5	13.5	29,200	3.58	7.7	18,000	2.40
3701043	25HBC330A**50	CSPH*3612A**	58CV(A,X)135−22	30,000	11.5	13.5	29,200	3.58	7.8	18,000	2.40
3701044	25HBC330A**50	CSPH*3612A**	58CV(A,X)155−22	30,000	11.5	14.0	29,200	3.60	7.8	18,000	2.40
3701051	25HBC330A**50	CSPH*3612A**	58HDV040−−12	30,000	11.0	13.2	29,200	3.54	7.7	18,400	2.36
3701052	25HBC330A**50	CSPH*3612A**	58HDV060−−12	30,000	11.0	13.2	30,000	3.60	7.7	18,500	2.38
3701053	25HBC330A**50	CSPH*3612A**	58HDV080−−20	30,000	11.5	13.5	30,000	3.70	8.0	18,400	2.44
3701054	25HBC330A**50	CSPH*3612A**	58HDV100−−20	30,000	11.5	13.5	29,200	3.64	7.8	18,200	2.42
3701048	25HBC330A**50	CSPH*3612A**	58ME(B,C)060−12	30,000	11.5	13.5	29,200	3.68	7.8	18,200	2.44
3701049	25HBC330A**50	CSPH*3612A**	58ME(B,C)080−12	30,000	11.5	13.5	29,200	3.64	7.7	18,200	2.42
3701050	25HBC330A**50	CSPH*3612A**	58ME(B,C)080−16	30,000	11.5	13.5	29,200	3.70	8.0	18,400	2.44
3701047	25HBC330A**50	CSPH*3612A**	58MEB040−12	30,000	11.5	13.5	29,200	3.66	7.8	18,200	2.44
3701035	25HBC330A**50	CSPH*3612A**	58MV(B,C)060−14	30,000	11.5	13.5	29,200	3.60	7.8	18,100	2.40
3701036	25HBC330A**50	CSPH*3612A**	58MV(B,C)080−14	30,000	11.5	13.5	29,200	3.52	7.7	18,000	2.38
3701037	25HBC330A**50	CSPH*3612A**	58MV(B,C)080−20	30,000	11.5	13.5	29,200	3.56	7.7	18,000	2.38
3701038	25HBC330A**50	CSPH*3612A**	58MV(B,C)100−20	30,000	11.5	13.5	29,200	3.50	7.7	17,900	2.36
3701039	25HBC330A**50	CSPH*3612A**	58MV(B,C)120−20	30,000	11.5	13.5	29,200	3.58	7.8	18,000	2.40
3701034	25HBC330A**50	CSPH*3612A**	58MVB040−14	30,000	11.5	13.5	29,200	3.54	7.7	18,100	2.38
3701045	25HBC330A**50	CSPH*3612A**	58PH*070−16	30,000	11.5	13.5	29,200	3.58	7.8	18,300	2.38
3701046	25HBC330A**50	CSPH*3612A**	58PH*090−16	30,000	11.5	13.5	29,200	3.62	7.8	18,200	2.42
3701090	25HBC330A**50	CSPH*3612A**	58VLR105−12	30,000	11.5	13.5	29,000	3.60	7.7	18,200	2.40
3701089	25HBC330A**50	CSPH*3612A**	58VMR105−12	30,000	11.5	13.5	29,000	3.50	7.7	17,900	2.36
3699487	25HBC336(A,W)**30	†FY5BNF036		34,000	11.0	13.0	34,000	3.62	7.8	21,600	2.52
3699488	25HBC336(A,W)**30	FB4CNF036		34,000	11.0	13.0	34,000	3.62	7.8	21,400	2.50
3698884	25HBC336(A,W)**30	FB4CNF036+TXV		34,000	11.0	13.2	34,000	3.62	7.8	21,400	2.50
3699489	25HBC336(A,W)**30	FB4CNF042		34,000	11.0	13.2	34,000	3.86	8.0	21,400	2.64
3698885	25HBC336(A,W)**30	FB4CNF042+TXV		34,000	11.5	14.0	34,000	3.86	8.0	21,400	2.64
3698872	25HBC336(A,W)**30	FE4AN(B,F)003+UI		34,000	11.5	14.0	33,600	3.68	7.8	20,600	2.58
3698873	25HBC336(A,W)**30	FE4AN(B,F)005+UI		34,200	12.0	14.5	33,400	3.90	8.2	20,800	2.68
3698871	25HBC336(A,W)**30	FE4ANF002+UI		34,000	11.5	13.5	33,600	3.66	7.8	21,000	2.54
3698874	25HBC336(A,W)**30	FF1ENP037		34,000	11.0	13.0	34,000	3.56	7.8	21,800	2.48
3698876	25HBC336(A,W)**30	FV4BN(B,F)003		34,000	11.5	14.0	33,000	3.68	7.8	20,600	2.58
3698877	25HBC336(A,W)**30	FV4BN(B,F)005		34,200	12.0	14.5	33,400	3.90	8.2	20,800	2.68
3698875	25HBC336(A,W)**30	FV4BNF002		34,000	11.5	13.5	33,000	3.66	7.8	21,000	2.54
3698879	25HBC336(A,W)**30	FV4CN(B,F)003		34,000	11.5	14.0	33,000	3.68	7.8	20,600	2.58
3698880	25HBC336(A,W)**30	FV4CN(B,F)005		34,200	12.0	14.5	33,000	3.90	8.2	20,800	2.68
3698878	25HBC336(A,W)**30	FV4CNF002		34,000	11.5	13.5	33,000	3.66	7.8	21,000	2.54
3698882	25HBC336(A,W)**30	FX4CN(B,F)036		34,000	11.5	13.5	33,600	3.70	8.0	21,400	2.56
3698883	25HBC336(A,W)**30	FX4CN(B,F)042		34,000	11.5	13.5	33,600	3.80	8.2	21,600	2.58
3698869	25HBC336(A,W)**30	FX4DN(B,F)037		34,000	11.5	14.0	34,000	3.88	8.0	21,200	2.64
3698870	25HBC336(A,W)**30	FX4DN(B,F)043		34,000	11.5	14.0	34,000	3.88	8.0	21,200	2.64
3698881	25HBC336(A,W)**30	FY4ANF042		34,000	11.0	13.0	33,600	3.64	7.8	22,000	2.50
3698886	25HBC336(A,W)**30	FY5BNF036+TXV		34,000	11.0	13.2	34,000	3.62	7.8	21,600	2.52
3699490	25HBC336(A,W)**30	FY5BNF042		34,000	11.0	13.0	33,600	3.74	8.0	21,600	2.56
3698887	25HBC336(A,W)**30	FY5BNF042+TXV		34,000	11.0	13.5	33,600	3.74	8.0	21,600	2.56
3698664	25HBC336(A,W)**30	CAP**3614A**	58CV(A,X)070−12	33,800	11.5	13.5	33,600	3.56	7.8	21,000	2.50
3698665	25HBC336(A,W)**30	CAP**3614A**	58PH*045−08	33,800	11.0	13.0	33,600	3.52	7.8	21,400	2.46
3698663	25HBC336(A,W)**30	CAP**3614A**+TDR		33,800	11.0	13.0	34,000	3.52	7.8	21,600	2.46
3698668	25HBC336(A,W)**30	CAP**3617A**	58CV(A,X)090−16	33,800	11.5	13.5	33,000	3.62	7.8	20,800	2.54
3698671	25HBC336(A,W)**30	CAP**3617A**	58ME(B,C)060−12	33,800	11.5	13.5	33,600	3.66	8.0	21,000	2.56
3698672	25HBC336(A,W)**30	CAP**3617A**	58ME(B,C)080−12	33,800	11.5	13.5	33,600	3.66	8.0	20,800	2.56
3698673	25HBC336(A,W)**30	CAP**3617A**	58ME(B,C)080−16	33,800	11.5	13.5	33,600	3.66	8.0	21,000	2.56
3698670	25HBC336(A,W)**30	CAP**3617A**	58MEB040−12	33,800	11.5	13.5	33,600	3.66	8.0	21,000	2.56
3698667	25HBC336(A,W)**30	CAP**3617A**	58MV(B,C)060−14	33,800	11.5	13.5	33,600	3.64	7.8	21,000	2.54
3698669	25HBC336(A,W)**30	CAP**3617A**	58PH*070−16	33,800	11.5	13.5	33,600	3.58	7.8	21,200	2.52
3699433	25HBC336(A,W)**30	CAP**3617A**	58UVB060−14	33,800	11.5	13.5	33,600	3.64	7.8	21,000	2.54

See notes on page 45

COMBINATION RATINGS CONTINUED

AHRI Ref. No.	Model Number	Coil Model Number	Furnace Model Number	Cooling Capacity	EER	SEER	High Temp		HSPF	Low Temp	
							E Capacity	E COP		H Capacity	H COP
3698889	25HBC336(A,W)**30	CAP**3617A**	58VLR105−12	33,800	11.5	13.5	33,000	3.62	7.8	21,000	2.54
3698888	25HBC336(A,W)**30	CAP**3617A**	58VMR105−12	33,800	11.5	13.5	33,000	3.56	7.8	20,800	2.50
3698666	25HBC336(A,W)**30	CAP**3617A**+TDR		33,800	11.0	13.0	33,800	3.56	7.8	22,000	2.48
3698697	25HBC336(A,W)**30	CAP**3619A**	58HDV040−−12	33,800	11.0	13.0	33,600	3.52	7.8	21,400	2.46
3698698	25HBC336(A,W)**30	CAP**3619A**	58HDV060−−12	33,800	11.5	13.5	33,600	3.60	7.8	21,400	2.50
3698696	25HBC336(A,W)**30	CAP**3619A**+TDR		33,800	11.0	13.0	33,800	3.56	7.8	21,800	2.48
3698678	25HBC336(A,W)**30	CAP**3621A**	58CV(A,X)110−20	33,800	11.5	14.0	33,000	3.64	7.8	20,800	2.56
3698681	25HBC336(A,W)**30	CAP**3621A**	58ME(B,C)100−20	33,800	11.5	14.0	33,000	3.70	8.0	20,800	2.58
3698675	25HBC336(A,W)**30	CAP**3621A**	58MV(B,C)080−14	33,800	11.5	13.5	33,600	3.62	7.8	20,800	2.54
3698676	25HBC336(A,W)**30	CAP**3621A**	58MV(B,C)080−20	33,800	11.5	13.5	33,000	3.62	7.8	20,800	2.54
3698677	25HBC336(A,W)**30	CAP**3621A**	58MV(B,C)100−20	33,800	11.5	13.5	33,000	3.64	7.8	20,800	2.56
3698679	25HBC336(A,W)**30	CAP**3621A**	58PH*090−16	33,800	11.5	14.0	33,600	3.70	8.0	20,800	2.58
3698680	25HBC336(A,W)**30	CAP**3621A**	58PH*110−20	33,800	11.5	14.0	33,600	3.74	8.0	21,000	2.60
3699434	25HBC336(A,W)**30	CAP**3621A**	58UVB080−14	33,800	11.5	13.5	33,600	3.62	7.8	20,800	2.54
3699435	25HBC336(A,W)**30	CAP**3621A**	58UVB080−20	33,800	11.5	13.5	33,000	3.62	7.8	20,800	2.54
3699436	25HBC336(A,W)**30	CAP**3621A**	58UVB100−20	33,800	11.5	13.5	33,000	3.64	7.8	20,800	2.56
3698891	25HBC336(A,W)**30	CAP**3621A**	58VLR120−20	33,800	11.5	13.5	33,000	3.66	7.8	20,600	2.56
3698890	25HBC336(A,W)**30	CAP**3621A**	58VMR120−20	33,800	11.5	13.5	33,000	3.62	7.8	20,800	2.54
3698674	25HBC336(A,W)**30	CAP**3621A**+TDR		33,800	11.0	13.0	33,800	3.56	7.8	21,800	2.48
3698686	25HBC336(A,W)**30	CAP**4221A**	58CV(A,X)110−20	34,000	11.5	14.0	33,000	3.68	8.0	20,800	2.58
3698689	25HBC336(A,W)**30	CAP**4221A**	58ME(B,C)100−20	34,000	11.5	14.0	33,000	3.74	8.0	20,800	2.60
3698683	25HBC336(A,W)**30	CAP**4221A**	58MV(B,C)080−14	34,000	11.5	13.5	33,600	3.66	7.8	21,000	2.56
3698684	25HBC336(A,W)**30	CAP**4221A**	58MV(B,C)080−20	34,000	11.5	13.5	33,600	3.66	7.8	20,800	2.56
3698685	25HBC336(A,W)**30	CAP**4221A**	58MV(B,C)100−20	34,000	11.5	14.0	33,600	3.68	8.0	21,000	2.58
3698687	25HBC336(A,W)**30	CAP**4221A**	58PH*090−16	34,000	11.5	14.0	33,600	3.74	8.0	21,000	2.60
3698688	25HBC336(A,W)**30	CAP**4221A**	58PH*110−20	34,000	11.5	14.0	33,600	3.78	8.0	21,000	2.62
3699437	25HBC336(A,W)**30	CAP**4221A**	58UVB080−14	34,000	11.5	13.5	33,600	3.66	7.8	21,000	2.56
3699438	25HBC336(A,W)**30	CAP**4221A**	58UVB080−20	34,000	11.5	13.5	33,600	3.66	7.8	20,800	2.56
3699439	25HBC336(A,W)**30	CAP**4221A**	58UVB100−20	34,000	11.5	14.0	33,600	3.68	8.0	21,000	2.58
3698893	25HBC336(A,W)**30	CAP**4221A**	58VLR120−20	34,000	11.5	14.0	33,000	3.70	7.8	20,600	2.58
3698892	25HBC336(A,W)**30	CAP**4221A**	58VMR120−20	34,000	11.5	13.5	33,000	3.66	7.8	20,800	2.56
3698682	25HBC336(A,W)**30	CAP**4221A**+TDR		34,000	11.0	13.0	33,800	3.60	7.8	22,000	2.50
3698693	25HBC336(A,W)**30	CAP**4224A**	58CV(A,X)135−22	34,000	11.5	14.0	33,000	3.70	8.0	20,600	2.58
3698694	25HBC336(A,W)**30	CAP**4224A**	58CV(A,X)155−22	34,000	11.5	14.0	33,000	3.74	8.0	20,600	2.60
3698695	25HBC336(A,W)**30	CAP**4224A**	58HDV100−−20	34,000	11.5	14.0	33,600	3.76	8.0	21,200	2.60
3698692	25HBC336(A,W)**30	CAP**4224A**	58MV(B,C)120−20	34,000	11.5	14.0	33,000	3.70	8.0	20,800	2.58
3698691	25HBC336(A,W)**30	CAP**4224A**	58MVB040−14	34,000	11.5	13.5	33,600	3.62	7.8	20,800	2.54
3699440	25HBC336(A,W)**30	CAP**4224A**	58UVB120−20	34,000	11.5	14.0	33,000	3.70	8.0	20,800	2.58
3698690	25HBC336(A,W)**30	CAP**4224A**+TDR		34,000	11.0	13.0	33,800	3.60	7.8	22,000	2.50
3698819	25HBC336(A,W)**30	CNPF*3618A**+TDR		33,800	11.0	13.0	33,800	3.54	7.8	21,800	2.48
3698752	25HBC336(A,W)**30	CNPH*3617A**	58CV(A,X)070−12	33,800	11.5	13.5	33,000	3.56	7.8	21,000	2.50
3698753	25HBC336(A,W)**30	CNPH*3617A**	58CV(A,X)090−16	33,800	11.5	13.5	33,000	3.60	7.8	20,800	2.54
3698754	25HBC336(A,W)**30	CNPH*3617A**	58CV(A,X)110−20	33,800	11.5	13.5	33,000	3.60	7.8	20,800	2.54
3698755	25HBC336(A,W)**30	CNPH*3617A**	58CV(A,X)135−22	33,800	11.5	13.5	33,000	3.60	7.8	20,800	2.54
3698756	25HBC336(A,W)**30	CNPH*3617A**	58CV(A,X)155−22	33,800	11.5	13.5	33,000	3.62	7.8	20,800	2.56
3698766	25HBC336(A,W)**30	CNPH*3617A**	58HDV040−−12	33,800	11.0	13.0	33,600	3.48	7.8	21,400	2.46
3698767	25HBC336(A,W)**30	CNPH*3617A**	58HDV060−−12	33,800	11.0	13.2	33,600	3.56	7.8	21,400	2.50
3698768	25HBC336(A,W)**30	CNPH*3617A**	58HDV080−−20	33,800	11.5	13.5	33,600	3.64	7.8	21,400	2.54
3698769	25HBC336(A,W)**30	CNPH*3617A**	58HDV100−−20	33,800	11.5	13.5	33,000	3.62	7.8	21,000	2.54
3698762	25HBC336(A,W)**30	CNPH*3617A**	58ME(B,C)060−12	33,800	11.5	13.5	33,000	3.62	7.8	21,000	2.54
3698763	25HBC336(A,W)**30	CNPH*3617A**	58ME(B,C)080−12	33,800	11.5	13.5	33,000	3.62	7.8	20,800	2.54
3698764	25HBC336(A,W)**30	CNPH*3617A**	58ME(B,C)080−16	33,800	11.5	13.5	33,000	3.62	7.8	21,000	2.54
3698765	25HBC336(A,W)**30	CNPH*3617A**	58ME(B,C)100−20	33,800	11.5	13.5	33,000	3.62	7.8	20,600	2.54
3698761	25HBC336(A,W)**30	CNPH*3617A**	58MEB040−12	33,800	11.5	13.5	33,000	3.62	7.8	20,800	2.54
3698747	25HBC336(A,W)**30	CNPH*3617A**	58MV(B,C)060−14	33,800	11.5	13.5	33,600	3.62	7.8	21,000	2.54
3698748	25HBC336(A,W)**30	CNPH*3617A**	58MV(B,C)080−14	33,800	11.5	13.5	33,600	3.58	7.8	21,000	2.52
3698749	25HBC336(A,W)**30	CNPH*3617A**	58MV(B,C)080−20	33,800	11.5	13.5	33,000	3.58	7.8	20,800	2.52
3698750	25HBC336(A,W)**30	CNPH*3617A**	58MV(B,C)100−20	33,800	11.5	13.5	33,600	3.60	7.8	21,000	2.54
3698751	25HBC336(A,W)**30	CNPH*3617A**	58MV(B,C)120−20	33,800	11.5	13.5	33,000	3.60	7.8	20,800	2.54
3698746	25HBC336(A,W)**30	CNPH*3617A**	58MVB040−14	33,800	11.5	13.5	33,000	3.54	7.8	21,000	2.50
3698757	25HBC336(A,W)**30	CNPH*3617A**	58PH*045−08	33,800	11.0	13.0	33,600	3.52	7.8	21,400	2.46
3698758	25HBC336(A,W)**30	CNPH*3617A**	58PH*070−16	33,800	11.5	14.0	33,600	3.56	7.8	21,000	2.50
3698759	25HBC336(A,W)**30	CNPH*3617A**	58PH*090−16	33,800	11.5	13.5	33,000	3.64	7.8	20,800	2.54
3698760	25HBC336(A,W)**30	CNPH*3617A**	58PH*110−20	33,800	11.5	13.5	33,000	3.66	7.8	20,800	2.56
3698905	25HBC336(A,W)**30	CNPH*3617A**	58VLR120−20	33,800	11.5	13.5	33,000	3.62	7.8	20,800	2.54
3698904	25HBC336(A,W)**30	CNPH*3617A**	58VMR120−20	33,800	11.5	13.5	33,000	3.58	7.8	20,800	2.52
3698745	25HBC336(A,W)**30	CNPH*3617A**+TDR		33,800	11.0	13.0	33,800	3.54	7.8	21,800	2.48
3698777	25HBC336(A,W)**30	CNPH*4221A**	58CV(A,X)070−12	34,000	11.5	13.5	33,000	3.64	7.8	21,000	2.54
3698778	25HBC336(A,W)**30	CNPH*4221A**	58CV(A,X)090−16	34,000	11.5	14.0	33,000	3.68	7.8	20,800	2.56
3698779	25HBC336(A,W)**30	CNPH*4221A**	58CV(A,X)110−20	34,000	11.5	14.0	33,000	3.68	7.8	20,800	2.58
3698780	25HBC336(A,W)**30	CNPH*4221A**	58CV(A,X)135−22	34,000	11.5	14.0	33,000	3.68	7.8	20,800	2.58
3698781	25HBC336(A,W)**30	CNPH*4221A**	58CV(A,X)155−22	34,000	11.5	14.0	33,000	3.72	8.0	20,800	2.60
3698791	25HBC336(A,W)**30	CNPH*4221A**	58HDV040−−12	34,000	11.0	13.5	33,600	3.56	7.8	21,400	2.48
3698792	25HBC336(A,W)**30	CNPH*4221A**	58HDV060−−12	34,000	11.0	13.5	33,600	3.64	7.8	21,400	2.52
3698793	25HBC336(A,W)**30	CNPH*4221A**	58HDV080−−20	34,000	11.5	13.5	33,600	3.74	8.0	21,400	2.58
3698794	25HBC336(A,W)**30	CNPH*4221A**	58HDV100−−20	34,000	11.5	13.5	33,600	3.72	8.0	21,200	2.58
3698787	25HBC336(A,W)**30	CNPH*4221A**	58ME(B,C)060−12	34,000	11.5	13.5	33,000	3.72	8.0	21,000	2.58
3698788	25HBC336(A,W)**30	CNPH*4221A**	58ME(B,C)080−12	34,000	11.5	13.5	33,000	3.70	8.0	21,000	2.58
3698789	25HBC336(A,W)**30	CNPH*4221A**	58ME(B,C)080−16	34,000	11.5	13.5	33,000	3.72	8.0	21,000	2.58
3698790	25HBC336(A,W)**30	CNPH*4221A**	58ME(B,C)100−20	34,000	11.5	14.0	33,000	3.72	8.0	20,800	2.60
3698786	25HBC336(A,W)**30	CNPH*4221A**	58MEB040−12	34,000	11.5	14.0	33,000	3.72	8.0	21,000	2.58
3698772	25HBC336(A,W)**30	CNPH*4221A**	58MV(B,C)060−14	34,000	11.5	13.5	33,600	3.70	7.8	21,000	2.58
3698773	25HBC336(A,W)**30	CNPH*4221A**	58MV(B,C)080−14	34,000	11.5	13.5	33,600	3.66	7.8	21,000	2.54
3698774	25HBC336(A,W)**30	CNPH*4221A**	58MV(B,C)080−20	34,000	11.5	13.5	33,600	3.66	7.8	21,000	2.56
3698775	25HBC336(A,W)**30	CNPH*4221A**	58MV(B,C)100−20	34,000	11.5	13.5	33,000	3.68	8.0	21,000	2.56
3698776	25HBC336(A,W)**30	CNPH*4221A**	58MV(B,C)120−20	34,000	11.5	13.5	33,000	3.68	7.8	20,800	2.58
3698771	25HBC336(A,W)**30	CNPH*4221A**	58MVB040−14	34,000	11.5	13.5	33,600	3.62	7.8	21,000	2.54

See notes on page 45

COMBINATION RATINGS CONTINUED

AHRI Ref. No.	Model Number	Coil Model Number	Furnace Model Number	Cooling Capacity	EER	SEER	High Temp		HSPF	Low Temp	
							E Capacity	E COP		H Capacity	H COP
3698782	25HBC336(A,W)**30	CNPH*4221A**	58PH*045−08	34,000	11.0	13.2	33,000	3.60	7.8	21,400	2.50
3698783	25HBC336(A,W)**30	CNPH*4221A**	58PH*070−16	34,000	11.5	13.5	33,000	3.64	7.8	21,200	2.54
3698784	25HBC336(A,W)**30	CNPH*4221A**	58PH*090−16	34,000	11.5	14.0	33,000	3.72	8.0	21,000	2.60
3698785	25HBC336(A,W)**30	CNPH*4221A**	58PH*110−20	34,000	11.5	14.0	33,000	3.76	8.0	21,000	2.60
3698907	25HBC336(A,W)**30	CNPH*4221A**	58VLR105−12	33,800	11.5	13.5	33,000	3.68	7.8	21,200	2.56
3698909	25HBC336(A,W)**30	CNPH*4221A**	58VLR120−20	34,000	11.5	14.0	33,000	3.70	7.8	20,800	2.58
3698906	25HBC336(A,W)**30	CNPH*4221A**	58VMR105−12	33,800	11.5	13.5	33,000	3.62	7.8	20,800	2.54
3698908	25HBC336(A,W)**30	CNPH*4221A**	58VMR120−20	34,000	11.5	13.5	33,000	3.66	7.8	20,800	2.56
3698770	25HBC336(A,W)**30	CNPH*4221A**+TDR		34,000	11.0	13.0	33,800	3.62	7.8	22,000	2.50
3698802	25HBC336(A,W)**30	CNPH*4321A**	58CV(A,X)070−12	34,200	11.5	14.0	33,600	3.86	8.0	21,200	2.62
3698803	25HBC336(A,W)**30	CNPH*4321A**	58CV(A,X)090−16	34,200	12.0	14.5	33,600	3.90	8.2	21,000	2.66
3698804	25HBC336(A,W)**30	CNPH*4321A**	58CV(A,X)110−20	34,200	12.0	14.5	33,600	3.92	8.2	21,000	2.66
3698805	25HBC336(A,W)**30	CNPH*4321A**	58CV(A,X)135−22	34,200	12.0	14.5	33,600	3.92	8.2	21,000	2.66
3698806	25HBC336(A,W)**30	CNPH*4321A**	58CV(A,X)155−22	34,200	12.0	14.5	33,600	3.96	8.2	20,800	2.68
3698815	25HBC336(A,W)**30	CNPH*4321A**	58HDV040−−12	34,000	11.5	13.5	33,600	3.78	8.0	21,800	2.56
3698816	25HBC336(A,W)**30	CNPH*4321A**	58HDV060−−12	34,000	11.5	13.5	33,600	3.86	8.2	21,600	2.62
3698817	25HBC336(A,W)**30	CNPH*4321A**	58HDV080−−20	34,000	11.5	14.0	33,600	3.96	8.2	21,600	2.68
3698818	25HBC336(A,W)**30	CNPH*4321A**	58HDV100−−20	34,000	11.5	14.0	33,600	3.98	8.0	21,400	2.68
3698811	25HBC336(A,W)**30	CNPH*4321A**	58ME(B,C)060−12	34,200	12.0	14.5	33,600	3.96	8.2	21,400	2.68
3698812	25HBC336(A,W)**30	CNPH*4321A**	58ME(B,C)080−12	34,200	12.0	14.5	33,600	3.96	8.2	21,200	2.68
3698813	25HBC336(A,W)**30	CNPH*4321A**	58ME(B,C)080−16	34,200	12.0	14.5	33,600	3.96	8.2	21,400	2.66
3698814	25HBC336(A,W)**30	CNPH*4321A**	58ME(B,C)100−20	34,200	12.0	14.5	33,600	3.98	8.2	21,000	2.68
3698810	25HBC336(A,W)**30	CNPH*4321A**	58MEB040−12	34,200	12.0	14.5	33,600	3.96	8.2	21,200	2.68
3698797	25HBC336(A,W)**30	CNPH*4321A**	58MV(B,C)060−14	34,200	11.5	14.0	33,600	3.92	8.0	21,200	2.66
3698798	25HBC336(A,W)**30	CNPH*4321A**	58MV(B,C)080−14	34,200	11.5	14.0	33,600	3.88	8.2	21,200	2.64
3698799	25HBC336(A,W)**30	CNPH*4321A**	58MV(B,C)080−20	34,200	11.5	14.0	33,600	3.88	8.2	21,000	2.64
3698800	25HBC336(A,W)**30	CNPH*4321A**	58MV(B,C)100−20	34,200	11.5	14.0	33,600	3.92	8.2	21,200	2.66
3698801	25HBC336(A,W)**30	CNPH*4321A**	58MV(B,C)120−20	34,200	12.0	14.5	33,600	3.92	8.2	21,000	2.66
3698796	25HBC336(A,W)**30	CNPH*4321A**	58MVB040−14	34,200	11.5	14.0	33,600	3.84	8.0	21,200	2.62
3698807	25HBC336(A,W)**30	CNPH*4321A**	58PH*070−16	34,200	11.5	14.0	33,600	3.88	8.2	21,400	2.62
3698808	25HBC336(A,W)**30	CNPH*4321A**	58PH*090−16	34,200	12.0	14.5	33,600	3.98	8.2	21,200	2.68
3698809	25HBC336(A,W)**30	CNPH*4321A**	58PH*110−20	34,200	12.0	14.5	33,600	4.00	8.2	21,200	2.70
3698911	25HBC336(A,W)**30	CNPH*4321A**	58VLR105−12	34,000	11.5	14.0	33,800	3.90	8.0	21,200	2.64
3698913	25HBC336(A,W)**30	CNPH*4321A**	58VLR120−20	34,000	11.5	14.0	33,000	3.92	8.0	21,000	2.66
3698910	25HBC336(A,W)**30	CNPH*4321A**	58VMR105−12	34,000	11.5	14.0	33,000	3.84	8.0	21,000	2.62
3698912	25HBC336(A,W)**30	CNPH*4321A**	58VMR120−20	34,000	11.5	14.0	33,000	3.88	8.0	21,000	2.64
3698795	25HBC336(A,W)**30	CNPH*4321A**+TDR		34,200	11.0	13.0	33,800	3.78	8.0	22,200	2.56
3698701	25HBC336(A,W)**30	CNPV*3617A**	58CV(A,X)090−16	33,800	11.5	13.5	33,000	3.60	7.8	20,800	2.54
3698704	25HBC336(A,W)**30	CNPV*3617A**	58ME(B,C)060−12	33,800	11.5	13.5	33,600	3.62	7.8	21,000	2.54
3698705	25HBC336(A,W)**30	CNPV*3617A**	58ME(B,C)080−12	33,800	11.5	13.5	33,000	3.62	7.8	20,800	2.54
3698706	25HBC336(A,W)**30	CNPV*3617A**	58ME(B,C)080−16	33,800	11.5	13.5	33,600	3.62	7.8	21,000	2.54
3698703	25HBC336(A,W)**30	CNPV*3617A**	58MEB040−12	33,800	11.5	13.5	33,000	3.62	7.8	20,800	2.54
3698700	25HBC336(A,W)**30	CNPV*3617A**	58MV(B,C)060−14	33,800	11.5	13.5	33,600	3.62	7.8	21,000	2.54
3698702	25HBC336(A,W)**30	CNPV*3617A**	58PH*070−16	33,800	11.5	13.5	33,600	3.56	7.8	21,000	2.50
3699441	25HBC336(A,W)**30	CNPV*3617A**	58UVB060−14	33,800	11.5	13.5	33,600	3.62	7.8	21,000	2.54
3698895	25HBC336(A,W)**30	CNPV*3617A**	58VLR105−12	33,800	11.5	13.5	33,000	3.60	7.8	21,200	2.52
3698894	25HBC336(A,W)**30	CNPV*3617A**	58VMR105−12	33,800	11.5	13.5	33,000	3.54	7.7	20,800	2.50
3698699	25HBC336(A,W)**30	CNPV*3617A**+TDR		33,800	11.0	13.0	33,800	3.54	7.8	21,800	2.48
3698711	25HBC336(A,W)**30	CNPV*3621A**	58CV(A,X)110−20	33,800	11.5	13.5	33,000	3.60	7.8	20,800	2.54
3698714	25HBC336(A,W)**30	CNPV*3621A**	58ME(B,C)100−20	33,800	11.5	13.5	33,000	3.62	7.8	20,600	2.56
3698708	25HBC336(A,W)**30	CNPV*3621A**	58MV(B,C)080−14	33,800	11.5	13.5	33,600	3.58	7.8	21,000	2.52
3698709	25HBC336(A,W)**30	CNPV*3621A**	58MV(B,C)080−20	33,800	11.5	13.5	33,000	3.58	7.8	20,800	2.52
3698710	25HBC336(A,W)**30	CNPV*3621A**	58MV(B,C)100−20	33,800	11.5	13.5	33,600	3.60	7.8	21,000	2.54
3698712	25HBC336(A,W)**30	CNPV*3621A**	58PH*090−16	33,800	11.5	13.5	33,000	3.64	7.8	20,800	2.56
3698713	25HBC336(A,W)**30	CNPV*3621A**	58PH*110−20	33,800	11.5	13.5	33,000	3.66	7.8	20,800	2.56
3699442	25HBC336(A,W)**30	CNPV*3621A**	58UVB080−14	33,800	11.5	13.5	33,600	3.58	7.8	21,000	2.52
3699443	25HBC336(A,W)**30	CNPV*3621A**	58UVB080−20	33,800	11.5	13.5	33,000	3.58	7.8	20,800	2.52
3699444	25HBC336(A,W)**30	CNPV*3621A**	58UVB100−20	33,800	11.5	13.5	33,600	3.60	7.8	21,000	2.54
3698897	25HBC336(A,W)**30	CNPV*3621A**	58VLR120−20	33,800	11.5	13.5	33,000	3.62	7.8	20,600	2.54
3698896	25HBC336(A,W)**30	CNPV*3621A**	58VMR120−20	33,800	11.5	13.5	33,000	3.58	7.8	20,800	2.52
3698707	25HBC336(A,W)**30	CNPV*3621A**+TDR		33,800	11.0	13.0	33,800	3.54	7.8	21,800	2.48
3698717	25HBC336(A,W)**30	CNPV*3717A**	58CV(A,X)090−16	34,200	11.5	14.0	33,600	3.90	8.0	21,000	2.64
3698720	25HBC336(A,W)**30	CNPV*3717A**	58ME(B,C)060−12	34,200	11.5	14.0	33,600	3.94	8.0	21,200	2.66
3698721	25HBC336(A,W)**30	CNPV*3717A**	58ME(B,C)080−12	34,200	11.5	14.0	33,600	3.94	8.0	21,200	2.66
3698722	25HBC336(A,W)**30	CNPV*3717A**	58ME(B,C)080−16	34,200	11.5	14.0	33,600	3.94	8.0	21,200	2.66
3698719	25HBC336(A,W)**30	CNPV*3717A**	58MEB040−12	34,200	11.5	14.0	33,600	3.94	8.0	21,200	2.66
3698716	25HBC336(A,W)**30	CNPV*3717A**	58MV(B,C)060−14	34,200	11.5	14.0	33,600	3.92	8.0	21,200	2.64
3698718	25HBC336(A,W)**30	CNPV*3717A**	58PH*070−16	34,200	11.5	13.5	33,600	3.86	8.0	21,400	2.62
3699445	25HBC336(A,W)**30	CNPV*3717A**	58UVB060−14	34,200	11.5	14.0	33,600	3.92	8.0	21,200	2.64
3698899	25HBC336(A,W)**30	CNPV*3717A**	58VLR105−12	34,000	11.5	14.0	33,800	3.90	8.0	21,400	2.64
3698898	25HBC336(A,W)**30	CNPV*3717A**	58VMR105−12	34,000	11.5	14.0	33,000	3.82	8.0	21,000	2.60
3698715	25HBC336(A,W)**30	CNPV*3717A**+TDR		34,200	11.0	13.0	33,800	3.78	8.0	22,200	2.56
3698725	25HBC336(A,W)**30	CNPV*4217A**	58CV(A,X)090−16	34,000	11.5	14.0	33,600	3.72	8.0	20,800	2.58
3698728	25HBC336(A,W)**30	CNPV*4217A**	58ME(B,C)060−12	34,000	11.5	13.5	33,600	3.76	8.0	21,200	2.60
3698729	25HBC336(A,W)**30	CNPV*4217A**	58ME(B,C)080−12	34,000	11.5	14.0	33,600	3.76	8.0	21,000	2.60
3698730	25HBC336(A,W)**30	CNPV*4217A**	58ME(B,C)080−16	34,000	11.5	13.5	33,600	3.76	8.0	21,200	2.60
3698727	25HBC336(A,W)**30	CNPV*4217A**	58MEB040−12	34,000	11.5	14.0	33,600	3.76	8.0	21,000	2.60
3698724	25HBC336(A,W)**30	CNPV*4217A**	58MV(B,C)060−14	34,000	11.5	13.5	33,600	3.74	8.0	21,000	2.60
3698726	25HBC336(A,W)**30	CNPV*4217A**	58PH*070−16	34,000	11.5	13.5	33,600	3.68	8.0	21,200	2.56
3699446	25HBC336(A,W)**30	CNPV*4217A**	58UVB060−14	34,000	11.5	13.5	33,600	3.74	8.0	21,000	2.60
3698901	25HBC336(A,W)**30	CNPV*4217A**	58VLR105−12	34,000	11.5	13.5	33,000	3.72	8.0	21,200	2.58
3698900	25HBC336(A,W)**30	CNPV*4217A**	58VMR105−12	34,000	11.5	13.5	33,000	3.66	7.8	21,000	2.56
3698723	25HBC336(A,W)**30	CNPV*4217A**+TDR		34,000	11.0	13.0	33,800	3.68	7.8	22,000	2.52
3698735	25HBC336(A,W)**30	CNPV*4221A**	58CV(A,X)110−20	34,000	11.5	13.5	33,600	3.68	8.0	20,800	2.58
3698738	25HBC336(A,W)**30	CNPV*4221A**	58ME(B,C)100−20	34,000	11.5	14.0	33,000	3.72	8.0	20,800	2.60
3698732	25HBC336(A,W)**30	CNPV*4221A**	58MV(B,C)080−14	34,000	11.5	13.5	33,600	3.66	7.8	21,000	2.54
3698733	25HBC336(A,W)**30	CNPV*4221A**	58MV(B,C)080−20	34,000	11.5	13.5	33,600	3.66	7.8	21,000	2.56

See notes on page 45

COMBINATION RATINGS CONTINUED

AHRI Ref. No.	Model Number	Coil Model Number	Furnace Model Number	Cooling Capacity	EER	SEER	High Temp		HSPF	Low Temp	
							E Capacity	E COP		H Capacity	H COP
3698734	25HBC336(A,W)**30	CNPV*4221A**	58MV(B,C)100−20	34,000	11.5	13.5	33,600	3.68	8.0	21,000	2.56
3698736	25HBC336(A,W)**30	CNPV*4221A**	58PH*090−16	34,000	11.5	14.0	33,600	3.72	8.0	21,000	2.60
3698737	25HBC336(A,W)**30	CNPV*4221A**	58PH*110−20	34,000	11.5	14.0	33,600	3.76	8.0	21,000	2.60
3699447	25HBC336(A,W)**30	CNPV*4221A**	58UVB080−14	34,000	11.5	13.5	33,600	3.66	7.8	21,000	2.54
3699448	25HBC336(A,W)**30	CNPV*4221A**	58UVB080−20	34,000	11.5	13.5	33,600	3.66	7.8	21,000	2.56
3699449	25HBC336(A,W)**30	CNPV*4221A**	58UVB100−20	34,000	11.5	13.5	33,600	3.68	8.0	21,000	2.56
3698903	25HBC336(A,W)**30	CNPV*4221A**	58VLR120−20	34,000	11.5	14.0	33,000	3.70	7.8	20,800	2.58
3698902	25HBC336(A,W)**30	CNPV*4221A**	58VMR120−20	34,000	11.5	13.5	33,000	3.66	7.8	20,800	2.56
3698731	25HBC336(A,W)**30	CNPV*4221A**+TDR		34,000	11.0	13.0	33,800	3.62	7.8	22,000	2.50
3698742	25HBC336(A,W)**30	CNPV*4324A**	58CV(A,X)135−22	34,200	11.5	14.0	33,600	3.94	8.0	20,800	2.68
3698743	25HBC336(A,W)**30	CNPV*4324A**	58CV(A,X)155−22	34,200	11.5	14.0	33,600	3.98	8.0	20,800	2.70
3698744	25HBC336(A,W)**30	CNPV*4324A**	58HDV100−−20 (DWNFLWONLY)	34,200	11.5	14.0	33,600	4.00	8.0	21,400	2.68
3698741	25HBC336(A,W)**30	CNPV*4324A**	58MV(B,C)120−20	34,200	11.5	14.0	33,600	3.92	8.0	21,000	2.66
3698740	25HBC336(A,W)**30	CNPV*4324A**	58MVB040−14	34,200	11.5	14.0	33,600	3.86	8.0	21,000	2.62
3699450	25HBC336(A,W)**30	CNPV*4324A**	58UVB120−20	34,200	11.5	14.0	33,600	3.92	8.0	21,000	2.66
3698739	25HBC336(A,W)**30	CNPV*4324A**+TDR		34,200	11.0	13.0	33,800	3.78	8.0	22,200	2.56
3698827	25HBC336(A,W)**30	CSPH*3612A**	58CV(A,X)070−12	33,800	11.5	13.5	33,600	3.70	8.0	21,000	2.56
3698828	25HBC336(A,W)**30	CSPH*3612A**	58CV(A,X)090−16	33,800	11.5	14.0	33,600	3.74	8.0	20,800	2.60
3698829	25HBC336(A,W)**30	CSPH*3612A**	58CV(A,X)110−20	33,800	11.5	14.0	33,600	3.76	8.0	21,000	2.60
3698830	25HBC336(A,W)**30	CSPH*3612A**	58CV(A,X)135−22	33,800	11.5	14.0	33,600	3.76	8.0	20,800	2.60
3698831	25HBC336(A,W)**30	CSPH*3612A**	58CV(A,X)155−22	33,800	11.5	14.0	33,600	3.78	8.0	20,800	2.62
3698841	25HBC336(A,W)**30	CSPH*3612A**	58HDV040−−12	33,800	11.0	13.0	33,600	3.62	7.8	21,600	2.52
3698842	25HBC336(A,W)**30	CSPH*3612A**	58HDV060−−12	33,800	11.5	13.5	33,600	3.70	8.0	21,400	2.56
3698843	25HBC336(A,W)**30	CSPH*3612A**	58HDV080−−20	33,800	11.5	13.5	33,600	3.82	8.0	21,600	2.62
3698844	25HBC336(A,W)**30	CSPH*3612A**	58HDV100−−20	33,800	11.5	13.5	33,600	3.80	8.0	21,200	2.62
3698837	25HBC336(A,W)**30	CSPH*3612A**	58ME(B,C)060−12	33,800	11.5	14.0	33,600	3.78	8.0	21,200	2.62
3698838	25HBC336(A,W)**30	CSPH*3612A**	58ME(B,C)080−12	33,800	11.5	14.0	33,600	3.78	8.0	21,000	2.60
3698839	25HBC336(A,W)**30	CSPH*3612A**	58ME(B,C)080−16	33,800	11.5	14.0	33,600	3.78	8.0	21,200	2.62
3698840	25HBC336(A,W)**30	CSPH*3612A**	58ME(B,C)100−20	33,800	11.5	14.0	33,600	3.78	8.0	20,800	2.62
3698836	25HBC336(A,W)**30	CSPH*3612A**	58MEB040−12	33,800	11.5	14.0	33,600	3.78	8.0	21,000	2.62
3698822	25HBC336(A,W)**30	CSPH*3612A**	58MV(B,C)060−14	33,800	11.5	13.5	33,600	3.76	8.0	21,000	2.60
3698823	25HBC336(A,W)**30	CSPH*3612A**	58MV(B,C)080−14	33,800	11.5	13.5	33,600	3.72	8.0	21,200	2.58
3698824	25HBC336(A,W)**30	CSPH*3612A**	58MV(B,C)080−20	33,800	11.5	13.5	33,600	3.72	8.0	21,000	2.58
3698825	25HBC336(A,W)**30	CSPH*3612A**	58MV(B,C)100−20	33,800	11.5	14.0	33,600	3.76	8.0	21,000	2.60
3698826	25HBC336(A,W)**30	CSPH*3612A**	58MV(B,C)120−20	33,800	11.5	14.0	33,600	3.74	8.0	21,000	2.60
3698821	25HBC336(A,W)**30	CSPH*3612A**	58MVB040−14	33,800	11.5	13.5	33,600	3.68	7.8	21,000	2.56
3698832	25HBC336(A,W)**30	CSPH*3612A**	58PH*045−08	33,800	11.0	14.0	33,600	3.66	7.8	21,600	2.54
3698833	25HBC336(A,W)**30	CSPH*3612A**	58PH*070−16	33,800	11.5	13.5	33,600	3.70	8.0	21,200	2.56
3698834	25HBC336(A,W)**30	CSPH*3612A**	58PH*090−16	33,800	11.5	14.0	33,600	3.80	8.0	21,000	2.62
3698835	25HBC336(A,W)**30	CSPH*3612A**	58PH*110−20	33,800	11.5	14.0	33,600	3.82	8.0	21,000	2.64
3698915	25HBC336(A,W)**30	CSPH*3612A**	58VLR105−12	34,000	11.5	13.5	33,000	3.74	7.8	21,200	2.58
3698917	25HBC336(A,W)**30	CSPH*3612A**	58VLR120−20	34,000	11.5	14.0	33,000	3.76	8.0	20,800	2.60
3698914	25HBC336(A,W)**30	CSPH*3612A**	58VMR105−12	34,000	11.5	13.5	33,000	3.68	7.8	21,000	2.56
3698916	25HBC336(A,W)**30	CSPH*3612A**	58VMR120−20	34,000	11.5	14.0	33,000	3.72	7.8	21,000	2.58
3698820	25HBC336(A,W)**30	CSPH*3612A**+TDR		33,800	11.0	13.0	33,800	3.68	7.8	22,000	2.52
3698851	25HBC336(A,W)**30	CSPH*4212A**	58CV(A,X)070−12	34,000	11.5	13.5	33,600	3.74	8.0	21,000	2.58
3698852	25HBC336(A,W)**30	CSPH*4212A**	58CV(A,X)090−16	34,000	11.5	14.0	33,600	3.78	8.0	21,000	2.62
3698853	25HBC336(A,W)**30	CSPH*4212A**	58CV(A,X)110−20	34,000	11.5	14.0	33,600	3.80	8.0	21,000	2.62
3698854	25HBC336(A,W)**30	CSPH*4212A**	58CV(A,X)135−22	34,000	11.5	14.0	33,600	3.80	8.0	20,800	2.62
3698855	25HBC336(A,W)**30	CSPH*4212A**	58CV(A,X)155−22	34,000	11.5	14.0	33,600	3.82	8.0	20,800	2.64
3698865	25HBC336(A,W)**30	CSPH*4212A**	58HDV040−−12	34,000	11.0	13.2	33,600	3.68	8.0	21,600	2.54
3698866	25HBC336(A,W)**30	CSPH*4212A**	58HDV060−−12	34,000	11.5	13.5	33,600	3.78	8.0	21,600	2.58
3698867	25HBC336(A,W)**30	CSPH*4212A**	58HDV080−−20	34,000	11.5	13.5	33,600	3.90	8.0	21,600	2.64
3698868	25HBC336(A,W)**30	CSPH*4212A**	58HDV100−−20	34,000	11.5	14.0	33,600	3.86	8.0	21,200	2.64
3698861	25HBC336(A,W)**30	CSPH*4212A**	58ME(B,C)060−12	34,000	11.5	14.0	33,600	3.86	8.0	21,200	2.64
3698862	25HBC336(A,W)**30	CSPH*4212A**	58ME(B,C)080−12	34,000	11.5	14.0	33,600	3.84	8.0	21,200	2.64
3698863	25HBC336(A,W)**30	CSPH*4212A**	58ME(B,C)080−16	34,000	11.5	14.0	33,600	3.86	8.0	21,200	2.64
3698864	25HBC336(A,W)**30	CSPH*4212A**	58ME(B,C)100−20	34,000	11.5	14.0	33,600	3.84	8.0	20,800	2.64
3698860	25HBC336(A,W)**30	CSPH*4212A**	58MEB040−12	34,000	11.5	14.0	33,600	3.86	8.0	21,200	2.64
3698846	25HBC336(A,W)**30	CSPH*4212A**	58MV(B,C)060−14	34,000	11.5	14.0	33,600	3.82	8.0	21,200	2.62
3698847	25HBC336(A,W)**30	CSPH*4212A**	58MV(B,C)080−14	34,000	11.5	13.5	33,600	3.76	8.0	21,200	2.60
3698848	25HBC336(A,W)**30	CSPH*4212A**	58MV(B,C)080−20	34,000	11.5	14.0	33,600	3.76	8.0	21,000	2.60
3698849	25HBC336(A,W)**30	CSPH*4212A**	58MV(B,C)100−20	34,000	11.5	14.0	33,600	3.80	8.0	21,000	2.62
3698850	25HBC336(A,W)**30	CSPH*4212A**	58MV(B,C)120−20	34,000	11.5	14.0	33,600	3.78	8.0	21,000	2.62
3698856	25HBC336(A,W)**30	CSPH*4212A**	58PH*045−08	34,000	11.0	13.2	33,600	3.72	8.0	21,600	2.54
3698857	25HBC336(A,W)**30	CSPH*4212A**	58PH*070−16	34,000	11.5	13.5	33,600	3.76	8.0	21,400	2.58
3698858	25HBC336(A,W)**30	CSPH*4212A**	58PH*090−16	34,000	11.5	14.0	33,600	3.86	8.0	21,000	2.64
3698859	25HBC336(A,W)**30	CSPH*4212A**	58PH*110−20	34,000	12.0	14.5	33,600	3.90	8.2	21,000	2.66
3698919	25HBC336(A,W)**30	CSPH*4212A**	58VLR105−12	34,000	11.5	13.5	33,000	3.80	8.0	21,200	2.60
3698921	25HBC336(A,W)**30	CSPH*4212A**	58VLR120−20	34,000	11.5	14.0	33,000	3.80	8.0	20,800	2.62
3698918	25HBC336(A,W)**30	CSPH*4212A**	58VMR105−12	34,000	11.5	14.0	33,000	3.72	7.8	21,000	2.58
3698920	25HBC336(A,W)**30	CSPH*4212A**	58VMR120−20	34,000	11.5	14.0	33,000	3.76	7.8	21,000	2.60
3698845	25HBC336(A,W)**30	CSPH*4212A**+TDR		34,000	11.0	13.0	33,800	3.74	7.8	22,200	2.54
3701309	25HBC336A**50	†FY5BNF036		34,000	11.0	13.0	34,000	3.62	7.8	21,600	2.52
3701826	25HBC336A**50	FB4CNF036		34,000	11.0	13.0	34,000	3.62	7.8	21,400	2.50
3701841	25HBC336A**50	FB4CNF036+TXV		34,000	11.0	13.2	34,000	3.62	7.8	21,400	2.50
3701827	25HBC336A**50	FB4CNF042		34,000	11.0	13.2	34,000	3.86	8.0	21,400	2.64
3701842	25HBC336A**50	FB4CNF042+TXV		34,000	11.5	14.0	34,000	3.86	8.0	21,400	2.64
3701832	25HBC336A**50	FE4AN(B,F)003+UI		34,000	11.5	14.0	33,600	3.68	7.8	20,600	2.58
3702082	25HBC336A**50	FE4AN(B,F)005+UI		34,200	12.0	14.5	33,400	3.90	8.2	20,800	2.68
3701831	25HBC336A**50	FE4ANF002+UI		34,000	11.5	13.5	33,600	3.66	7.8	21,000	2.54
3701833	25HBC336A**50	FF1ENP037		34,000	11.0	13.0	34,000	3.56	7.8	21,800	2.48
3701835	25HBC336A**50	FV4BN(B,F)003		34,000	11.5	14.0	33,000	3.68	7.8	20,600	2.58
3702083	25HBC336A**50	FV4BN(B,F)005		34,200	12.0	14.5	33,400	3.90	8.2	20,800	2.68
3701834	25HBC336A**50	FV4BNF002		34,000	11.5	13.5	33,000	3.66	7.8	21,000	2.54

See notes on page 45

COMBINATION RATINGS CONTINUED

AHRI Ref. No.	Model Number	Coil Model Number	Furnace Model Number	Cooling Capacity	EER	SEER	High Temp		HSPF	Low Temp	
							E Capacity	E COP		H Capacity	H COP
3701837	25HBC336A**50	FV4CN(B,F)003		34,000	11.5	14.0	33,000	3.68	7.8	20,600	2.58
3702084	25HBC336A**50	FV4CN(B,F)005		34,200	12.0	14.5	33,000	3.90	8.2	20,800	2.68
3701836	25HBC336A**50	FV4CNF002		34,000	11.5	13.5	33,000	3.66	7.8	21,000	2.54
3701839	25HBC336A**50	FX4CN(B,F)036		34,000	11.5	13.5	33,600	3.70	8.0	21,400	2.56
3701840	25HBC336A**50	FX4CN(B,F)042		34,000	11.5	13.5	33,600	3.80	8.2	21,600	2.58
3701829	25HBC336A**50	FX4DN(B,F)037		34,000	11.5	14.0	34,000	3.88	8.0	21,200	2.64
3701830	25HBC336A**50	FX4DN(B,F)043		34,000	11.5	14.0	34,000	3.88	8.0	21,200	2.64
3701838	25HBC336A**50	FY4ANF042		34,000	11.0	13.0	33,600	3.64	7.8	22,000	2.50
3701843	25HBC336A**50	FY5BNF036+TXV		34,000	11.0	13.2	34,000	3.62	7.8	21,600	2.52
3701828	25HBC336A**50	FY5BNF042		34,000	11.0	13.0	33,600	3.74	8.0	21,600	2.56
3701844	25HBC336A**50	FY5BNF042+TXV		34,000	11.0	13.5	33,600	3.74	8.0	21,600	2.56
3701092	25HBC336A**50	CAP**3614A**	58CV(A,X)070–12	33,800	11.5	13.5	33,600	3.56	7.8	21,000	2.50
3701093	25HBC336A**50	CAP**3614A**	58PH*045–08	33,800	11.0	13.0	33,600	3.52	7.8	21,400	2.46
3701091	25HBC336A**50	CAP**3614A**+TDR		33,800	11.0	13.0	34,000	3.52	7.8	21,600	2.46
3701096	25HBC336A**50	CAP**3617A**	58CV(A,X)090–16	33,800	11.5	13.5	33,000	3.62	7.8	20,800	2.54
3701099	25HBC336A**50	CAP**3617A**	58ME(B,C)060–12	33,800	11.5	13.5	33,600	3.66	8.0	21,000	2.56
3701100	25HBC336A**50	CAP**3617A**	58ME(B,C)080–12	33,800	11.5	13.5	33,600	3.66	8.0	20,800	2.56
3701101	25HBC336A**50	CAP**3617A**	58ME(B,C)080–16	33,800	11.5	13.5	33,600	3.66	8.0	21,000	2.56
3701098	25HBC336A**50	CAP**3617A**	58MEB040–12	33,800	11.5	13.5	33,600	3.66	8.0	21,000	2.56
3701095	25HBC336A**50	CAP**3617A**	58MV(B,C)060–14	33,800	11.5	13.5	33,600	3.64	7.8	21,000	2.54
3701097	25HBC336A**50	CAP**3617A**	58PH*070–16	33,800	11.5	13.5	33,600	3.58	7.8	21,200	2.52
3701192	25HBC336A**50	CAP**3617A**	58UVB060–14	33,800	11.5	13.5	33,600	3.64	7.8	21,000	2.54
3701181	25HBC336A**50	CAP**3617A**	58VLR105–12	33,800	11.5	13.5	33,000	3.62	7.8	21,000	2.54
3701180	25HBC336A**50	CAP**3617A**	58VMR105–12	33,800	11.5	13.5	33,000	3.56	7.8	20,800	2.50
3701094	25HBC336A**50	CAP**3617A**+TDR		33,800	11.0	13.0	33,800	3.56	7.8	22,000	2.48
3701111	25HBC336A**50	CAP**3619A**	58HDV040––12	33,800	11.0	13.0	33,600	3.52	7.8	21,400	2.46
3701112	25HBC336A**50	CAP**3619A**	58HDV060––12	33,800	11.5	13.5	33,600	3.60	7.8	21,400	2.50
3701110	25HBC336A**50	CAP**3619A**+TDR		33,800	11.0	13.0	33,800	3.56	7.8	21,800	2.48
3701106	25HBC336A**50	CAP**3621A**	58CV(A,X)110–20	33,800	11.5	14.0	33,000	3.64	7.8	20,800	2.56
3701109	25HBC336A**50	CAP**3621A**	58ME(B,C)100–20	33,800	11.5	14.0	33,000	3.70	8.0	20,800	2.58
3701103	25HBC336A**50	CAP**3621A**	58MV(B,C)080–14	33,800	11.5	13.5	33,600	3.62	7.8	20,800	2.54
3701104	25HBC336A**50	CAP**3621A**	58MV(B,C)080–20	33,800	11.5	13.5	33,000	3.62	7.8	20,800	2.54
3701105	25HBC336A**50	CAP**3621A**	58MV(B,C)100–20	33,800	11.5	13.5	33,000	3.64	7.8	20,800	2.56
3701107	25HBC336A**50	CAP**3621A**	58PH*090–16	33,800	11.5	14.0	33,600	3.70	8.0	20,800	2.58
3701108	25HBC336A**50	CAP**3621A**	58PH*110–20	33,800	11.5	14.0	33,600	3.74	8.0	21,000	2.60
3701193	25HBC336A**50	CAP**3621A**	58UVB080–14	33,800	11.5	13.5	33,600	3.62	7.8	20,800	2.54
3701194	25HBC336A**50	CAP**3621A**	58UVB080–20	33,800	11.5	13.5	33,000	3.62	7.8	20,800	2.54
3701195	25HBC336A**50	CAP**3621A**	58UVB100–20	33,800	11.5	13.5	33,000	3.64	7.8	20,800	2.56
3701183	25HBC336A**50	CAP**3621A**	58VLR120–20	33,800	11.5	13.5	33,000	3.66	7.8	20,600	2.56
3701182	25HBC336A**50	CAP**3621A**	58VMR120–20	33,800	11.5	13.5	33,000	3.62	7.8	20,800	2.54
3701102	25HBC336A**50	CAP**3621A**+TDR		33,800	11.0	13.0	33,800	3.56	7.8	21,800	2.48
3701314	25HBC336A**50	CAP**4221A**	58CV(A,X)110–20	34,000	11.5	14.0	33,000	3.68	8.0	20,800	2.58
3701317	25HBC336A**50	CAP**4221A**	58ME(B,C)100–20	34,000	11.5	14.0	33,000	3.74	8.0	20,800	2.60
3701311	25HBC336A**50	CAP**4221A**	58MV(B,C)080–14	34,000	11.5	13.5	33,600	3.66	7.8	21,000	2.56
3701312	25HBC336A**50	CAP**4221A**	58MV(B,C)080–20	34,000	11.5	13.5	33,600	3.66	7.8	20,800	2.56
3701313	25HBC336A**50	CAP**4221A**	58MV(B,C)100–20	34,000	11.5	14.0	33,600	3.68	8.0	21,000	2.58
3701315	25HBC336A**50	CAP**4221A**	58PH*090–16	34,000	11.5	14.0	33,600	3.74	8.0	21,000	2.60
3701316	25HBC336A**50	CAP**4221A**	58PH*110–20	34,000	11.5	14.0	33,600	3.78	8.0	21,000	2.62
3701878	25HBC336A**50	CAP**4221A**	58UVB080–14	34,000	11.5	13.5	33,600	3.66	7.8	21,000	2.56
3701879	25HBC336A**50	CAP**4221A**	58UVB080–20	34,000	11.5	13.5	33,600	3.66	7.8	20,800	2.56
3701880	25HBC336A**50	CAP**4221A**	58UVB100–20	34,000	11.5	14.0	33,600	3.68	8.0	21,000	2.58
3701846	25HBC336A**50	CAP**4221A**	58VLR120–20	34,000	11.5	14.0	33,000	3.70	7.8	20,600	2.58
3701845	25HBC336A**50	CAP**4221A**	58VMR120–20	34,000	11.5	13.5	33,000	3.66	7.8	20,800	2.56
3701310	25HBC336A**50	CAP**4221A**+TDR		34,000	11.0	13.0	33,800	3.60	7.8	22,000	2.50
3701321	25HBC336A**50	CAP**4224A**	58CV(A,X)135–22	34,000	11.5	14.0	33,000	3.70	8.0	20,600	2.58
3701322	25HBC336A**50	CAP**4224A**	58CV(A,X)155–22	34,000	11.5	14.0	33,000	3.74	8.0	20,600	2.60
3701323	25HBC336A**50	CAP**4224A**	58HDV100––20	34,000	11.5	14.0	33,600	3.76	8.0	21,200	2.60
3701320	25HBC336A**50	CAP**4224A**	58MV(B,C)120–20	34,000	11.5	14.0	33,000	3.70	8.0	20,800	2.58
3701319	25HBC336A**50	CAP**4224A**	58MVB040–14	34,000	11.5	13.5	33,600	3.62	7.8	20,800	2.54
3701881	25HBC336A**50	CAP**4224A**	58UVB120–20	34,000	11.5	14.0	33,000	3.70	8.0	20,800	2.58
3701318	25HBC336A**50	CAP**4224A**+TDR		34,000	11.0	13.0	33,800	3.60	7.8	22,000	2.50
3702148	25HBC336A**50	CAP**6021A**+TDR		58,000	10.8	13.0	57,500	3.52	7.7	36,600	2.52
3701154	25HBC336A**50	CNPF*3618A**+TDR		33,800	11.0	13.0	33,800	3.54	7.8	21,800	2.48
3701136	25HBC336A**50	CNPH*3617A**	58CV(A,X)070–12	33,800	11.5	13.5	33,000	3.56	7.8	21,000	2.50
3701137	25HBC336A**50	CNPH*3617A**	58CV(A,X)090–16	33,800	11.5	13.5	33,000	3.60	7.8	20,800	2.54
3701138	25HBC336A**50	CNPH*3617A**	58CV(A,X)110–20	33,800	11.5	13.5	33,000	3.60	7.8	20,800	2.54
3701139	25HBC336A**50	CNPH*3617A**	58CV(A,X)135–22	33,800	11.5	13.5	33,000	3.60	7.8	20,800	2.54
3701140	25HBC336A**50	CNPH*3617A**	58CV(A,X)155–22	33,800	11.5	13.5	33,000	3.62	7.8	20,800	2.56
3701150	25HBC336A**50	CNPH*3617A**	58HDV040––12	33,800	11.0	13.0	33,600	3.48	7.8	21,400	2.46
3701151	25HBC336A**50	CNPH*3617A**	58HDV060––12	33,800	11.0	13.2	33,600	3.56	7.8	21,400	2.50
3701152	25HBC336A**50	CNPH*3617A**	58HDV080––20	33,800	11.5	13.5	33,600	3.64	7.8	21,400	2.54
3701153	25HBC336A**50	CNPH*3617A**	58HDV100––20	33,800	11.5	13.5	33,000	3.62	7.8	21,000	2.54
3701146	25HBC336A**50	CNPH*3617A**	58ME(B,C)060–12	33,800	11.5	13.5	33,000	3.62	7.8	21,000	2.54
3701147	25HBC336A**50	CNPH*3617A**	58ME(B,C)080–12	33,800	11.5	13.5	33,000	3.62	7.8	20,800	2.54
3701148	25HBC336A**50	CNPH*3617A**	58ME(B,C)080–16	33,800	11.5	13.5	33,000	3.62	7.8	21,000	2.54
3701149	25HBC336A**50	CNPH*3617A**	58ME(B,C)100–20	33,800	11.5	13.5	33,000	3.62	7.8	20,600	2.54
3701145	25HBC336A**50	CNPH*3617A**	58MEB040–12	33,800	11.5	13.5	33,000	3.62	7.8	20,800	2.54
3701131	25HBC336A**50	CNPH*3617A**	58MV(B,C)060–14	33,800	11.5	13.5	33,600	3.62	7.8	21,000	2.54
3701132	25HBC336A**50	CNPH*3617A**	58MV(B,C)080–14	33,800	11.5	13.5	33,600	3.58	7.8	21,000	2.52
3701133	25HBC336A**50	CNPH*3617A**	58MV(B,C)080–20	33,800	11.5	13.5	33,000	3.58	7.8	20,800	2.52
3701134	25HBC336A**50	CNPH*3617A**	58MV(B,C)100–20	33,800	11.5	13.5	33,600	3.60	7.8	21,000	2.54
3701135	25HBC336A**50	CNPH*3617A**	58MV(B,C)120–20	33,800	11.5	13.5	33,000	3.60	7.8	20,800	2.54
3701130	25HBC336A**50	CNPH*3617A**	58MVB040–14	33,800	11.5	13.5	33,000	3.54	7.8	21,000	2.50
3701141	25HBC336A**50	CNPH*3617A**	58PH*045–08	33,800	11.0	13.0	33,600	3.52	7.8	21,400	2.46
3701142	25HBC336A**50	CNPH*3617A**	58PH*070–16	33,800	11.5	14.0	33,600	3.56	7.8	21,000	2.50
3701143	25HBC336A**50	CNPH*3617A**	58PH*090–16	33,800	11.5	13.5	33,000	3.64	7.8	20,800	2.54
3701144	25HBC336A**50	CNPH*3617A**	58PH*110–20	33,800	11.5	13.5	33,000	3.66	7.8	20,800	2.56

See notes on page 45

COMBINATION RATINGS CONTINUED

AHRI Ref. No.	Model Number	Coil Model Number	Furnace Model Number	Cooling Capacity	EER	SEER	High Temp		HSPF	Low Temp	
							E Capacity	E COP		H Capacity	H COP
3701189	25HBC336A**50	CNPH*3617A**	58VLR120−20	33,800	11.5	13.5	33,000	3.62	7.8	20,800	2.54
3701188	25HBC336A**50	CNPH*3617A**	58VMR120−20	33,800	11.5	13.5	33,000	3.58	7.8	20,800	2.52
3701129	25HBC336A**50	CNPH*3617A**+TDR		33,800	11.0	13.0	33,800	3.54	7.8	21,800	2.48
3701347	25HBC336A**50	CNPH*4221A**	58CV(A,X)070−12	34,000	11.5	13.5	33,000	3.64	7.8	21,000	2.54
3701348	25HBC336A**50	CNPH*4221A**	58CV(A,X)090−16	34,000	11.5	14.0	33,000	3.68	7.8	20,800	2.56
3701349	25HBC336A**50	CNPH*4221A**	58CV(A,X)110−20	34,000	11.5	14.0	33,000	3.68	7.8	20,800	2.58
3701350	25HBC336A**50	CNPH*4221A**	58CV(A,X)135−22	34,000	11.5	14.0	33,000	3.68	7.8	20,800	2.58
3701351	25HBC336A**50	CNPH*4221A**	58CV(A,X)155−22	34,000	11.5	14.0	33,000	3.72	8.0	20,800	2.60
3701794	25HBC336A**50	CNPH*4221A**	58HDV040−−12	34,000	11.0	13.5	33,600	3.56	7.8	21,400	2.48
3701795	25HBC336A**50	CNPH*4221A**	58HDV060−−12	34,000	11.0	13.5	33,600	3.64	7.8	21,400	2.52
3701796	25HBC336A**50	CNPH*4221A**	58HDV080−−20	34,000	11.5	13.5	33,600	3.74	8.0	21,400	2.58
3701797	25HBC336A**50	CNPH*4221A**	58HDV100−−20	34,000	11.5	13.5	33,600	3.72	8.0	21,200	2.58
3701790	25HBC336A**50	CNPH*4221A**	58ME(B,C)060−12	34,000	11.5	13.5	33,000	3.72	8.0	21,000	2.58
3701791	25HBC336A**50	CNPH*4221A**	58ME(B,C)080−12	34,000	11.5	13.5	33,000	3.70	8.0	21,000	2.58
3701792	25HBC336A**50	CNPH*4221A**	58ME(B,C)080−16	34,000	11.5	13.5	33,000	3.72	8.0	21,000	2.58
3701793	25HBC336A**50	CNPH*4221A**	58ME(B,C)100−20	34,000	11.5	14.0	33,000	3.72	8.0	20,800	2.60
3701789	25HBC336A**50	CNPH*4221A**	58MEB040−12	34,000	11.5	14.0	33,000	3.72	8.0	21,000	2.58
3701342	25HBC336A**50	CNPH*4221A**	58MV(B,C)060−14	34,000	11.5	13.5	33,600	3.70	7.8	21,000	2.58
3701343	25HBC336A**50	CNPH*4221A**	58MV(B,C)080−14	34,000	11.5	13.5	33,600	3.66	7.8	21,000	2.54
3701344	25HBC336A**50	CNPH*4221A**	58MV(B,C)080−20	34,000	11.5	13.5	33,600	3.66	7.8	21,000	2.56
3701345	25HBC336A**50	CNPH*4221A**	58MV(B,C)100−20	34,000	11.5	13.5	33,000	3.68	8.0	21,000	2.56
3701346	25HBC336A**50	CNPH*4221A**	58MV(B,C)120−20	34,000	11.5	13.5	33,000	3.68	7.8	20,800	2.58
3701341	25HBC336A**50	CNPH*4221A**	58MVB040−14	34,000	11.5	13.5	33,600	3.62	7.8	21,000	2.54
3701352	25HBC336A**50	CNPH*4221A**	58PH*045−08	34,000	11.0	13.2	33,000	3.60	7.8	21,400	2.50
3701353	25HBC336A**50	CNPH*4221A**	58PH*070−16	34,000	11.5	13.5	33,000	3.64	7.8	21,200	2.54
3701787	25HBC336A**50	CNPH*4221A**	58PH*090−16	34,000	11.5	14.0	33,000	3.72	8.0	21,000	2.60
3701788	25HBC336A**50	CNPH*4221A**	58PH*110−20	34,000	11.5	14.0	33,000	3.76	8.0	21,000	2.60
3701191	25HBC336A**50	CNPH*4221A**	58VLR105−12	33,800	11.5	13.5	33,000	3.68	7.8	21,200	2.56
3701865	25HBC336A**50	CNPH*4221A**	58VLR120−20	34,000	11.5	14.0	33,000	3.70	7.8	20,800	2.58
3701190	25HBC336A**50	CNPH*4221A**	58VMR105−12	33,800	11.5	13.5	33,000	3.62	7.8	20,800	2.54
3701864	25HBC336A**50	CNPH*4221A**	58VMR120−20	34,000	11.5	13.5	33,000	3.66	7.8	20,800	2.56
3701340	25HBC336A**50	CNPH*4221A**+TDR		34,000	11.0	13.0	33,800	3.62	7.8	22,000	2.50
3702069	25HBC336A**50	CNPH*4321A**	58CV(A,X)070−12	34,200	11.5	14.0	33,600	3.86	8.0	21,200	2.62
3702070	25HBC336A**50	CNPH*4321A**	58CV(A,X)090−16	34,200	12.0	14.5	33,600	3.90	8.2	21,000	2.66
3702071	25HBC336A**50	CNPH*4321A**	58CV(A,X)110−20	34,200	12.0	14.5	33,600	3.92	8.2	21,000	2.66
3702072	25HBC336A**50	CNPH*4321A**	58CV(A,X)135−22	34,200	12.0	14.5	33,600	3.92	8.2	21,000	2.66
3702073	25HBC336A**50	CNPH*4321A**	58CV(A,X)155−22	34,200	12.0	14.5	33,600	3.96	8.2	20,800	2.68
3701798	25HBC336A**50	CNPH*4321A**	58HDV040−−12	34,000	11.5	13.5	33,600	3.78	8.0	21,800	2.56
3701799	25HBC336A**50	CNPH*4321A**	58HDV060−−12	34,000	11.5	13.5	33,600	3.86	8.2	21,600	2.62
3701800	25HBC336A**50	CNPH*4321A**	58HDV080−−20	34,000	11.5	14.0	33,600	3.96	8.2	21,600	2.68
3701801	25HBC336A**50	CNPH*4321A**	58HDV100−−20	34,000	11.5	14.0	33,600	3.98	8.0	21,400	2.68
3702078	25HBC336A**50	CNPH*4321A**	58ME(B,C)060−12	34,200	12.0	14.5	33,600	3.96	8.2	21,400	2.68
3702079	25HBC336A**50	CNPH*4321A**	58ME(B,C)080−12	34,200	12.0	14.5	33,600	3.96	8.2	21,200	2.68
3702080	25HBC336A**50	CNPH*4321A**	58ME(B,C)080−16	34,200	12.0	14.5	33,600	3.96	8.2	21,400	2.66
3702081	25HBC336A**50	CNPH*4321A**	58ME(B,C)100−20	34,200	12.0	14.5	33,600	3.98	8.2	21,000	2.68
3702077	25HBC336A**50	CNPH*4321A**	58MEB040−12	34,200	12.0	14.5	33,600	3.96	8.2	21,200	2.68
3702064	25HBC336A**50	CNPH*4321A**	58MV(B,C)060−14	34,200	11.5	14.0	33,600	3.92	8.0	21,200	2.66
3702065	25HBC336A**50	CNPH*4321A**	58MV(B,C)080−14	34,200	11.5	14.0	33,600	3.88	8.2	21,200	2.64
3702066	25HBC336A**50	CNPH*4321A**	58MV(B,C)080−20	34,200	11.5	14.0	33,600	3.88	8.2	21,000	2.64
3702067	25HBC336A**50	CNPH*4321A**	58MV(B,C)100−20	34,200	11.5	14.0	33,600	3.92	8.2	21,200	2.66
3702068	25HBC336A**50	CNPH*4321A**	58MV(B,C)120−20	34,200	12.0	14.5	33,600	3.92	8.2	21,000	2.66
3702063	25HBC336A**50	CNPH*4321A**	58MVB040−14	34,200	11.5	14.0	33,600	3.84	8.0	21,200	2.62
3702074	25HBC336A**50	CNPH*4321A**	58PH*070−16	34,200	11.5	14.0	33,600	3.88	8.2	21,400	2.62
3702075	25HBC336A**50	CNPH*4321A**	58PH*090−16	34,200	12.0	14.5	33,600	3.98	8.2	21,200	2.68
3702076	25HBC336A**50	CNPH*4321A**	58PH*110−20	34,200	12.0	14.5	33,600	4.00	8.2	21,200	2.70
3701867	25HBC336A**50	CNPH*4321A**	58VLR105−12	34,000	11.5	14.0	33,800	3.90	8.0	21,200	2.64
3701869	25HBC336A**50	CNPH*4321A**	58VLR120−20	34,000	11.5	14.0	33,000	3.92	8.0	21,000	2.66
3701866	25HBC336A**50	CNPH*4321A**	58VMR105−12	34,000	11.5	14.0	33,000	3.84	8.0	21,000	2.62
3701868	25HBC336A**50	CNPH*4321A**	58VMR120−20	34,000	11.5	14.0	33,000	3.88	8.0	21,000	2.64
3702062	25HBC336A**50	CNPH*4321A**+TDR		34,200	11.0	13.0	33,800	3.78	8.0	22,200	2.56
3701115	25HBC336A**50	CNPV*3617A**	58CV(A,X)090−16	33,800	11.5	13.5	33,000	3.60	7.8	20,800	2.54
3701118	25HBC336A**50	CNPV*3617A**	58ME(B,C)060−12	33,800	11.5	13.5	33,600	3.62	7.8	21,000	2.54
3701119	25HBC336A**50	CNPV*3617A**	58ME(B,C)080−12	33,800	11.5	13.5	33,000	3.62	7.8	20,800	2.54
3701120	25HBC336A**50	CNPV*3617A**	58ME(B,C)080−16	33,800	11.5	13.5	33,600	3.62	7.8	21,000	2.54
3701117	25HBC336A**50	CNPV*3617A**	58MEB040−12	33,800	11.5	13.5	33,000	3.62	7.8	20,800	2.54
3701114	25HBC336A**50	CNPV*3617A**	58MV(B,C)060−14	33,800	11.5	13.5	33,600	3.62	7.8	21,000	2.54
3701116	25HBC336A**50	CNPV*3617A**	58PH*070−16	33,800	11.5	13.5	33,600	3.56	7.8	21,000	2.50
3701196	25HBC336A**50	CNPV*3617A**	58UVB060−14	33,800	11.5	13.5	33,600	3.62	7.8	21,000	2.54
3701185	25HBC336A**50	CNPV*3617A**	58VLR105−12	33,800	11.5	13.5	33,000	3.60	7.8	21,200	2.52
3701184	25HBC336A**50	CNPV*3617A**	58VMR105−12	33,800	11.5	13.5	33,000	3.54	7.7	20,800	2.50
3701113	25HBC336A**50	CNPV*3617A**+TDR		33,800	11.0	13.0	33,800	3.54	7.8	21,800	2.48
3701125	25HBC336A**50	CNPV*3621A**	58CV(A,X)110−20	33,800	11.5	13.5	33,000	3.60	7.8	20,800	2.54
3701128	25HBC336A**50	CNPV*3621A**	58ME(B,C)100−20	33,800	11.5	13.5	33,000	3.62	7.8	20,600	2.56
3701122	25HBC336A**50	CNPV*3621A**	58MV(B,C)080−14	33,800	11.5	13.5	33,600	3.58	7.8	21,000	2.52
3701123	25HBC336A**50	CNPV*3621A**	58MV(B,C)080−20	33,800	11.5	13.5	33,000	3.58	7.8	20,800	2.52
3701124	25HBC336A**50	CNPV*3621A**	58MV(B,C)100−20	33,800	11.5	13.5	33,600	3.60	7.8	21,000	2.54
3701126	25HBC336A**50	CNPV*3621A**	58PH*090−16	33,800	11.5	13.5	33,000	3.64	7.8	20,800	2.56
3701127	25HBC336A**50	CNPV*3621A**	58PH*110−20	33,800	11.5	13.5	33,000	3.66	7.8	20,800	2.56
3701197	25HBC336A**50	CNPV*3621A**	58UVB080−14	33,800	11.5	13.5	33,600	3.58	7.8	21,000	2.52
3701198	25HBC336A**50	CNPV*3621A**	58UVB080−20	33,800	11.5	13.5	33,000	3.58	7.8	20,800	2.52
3701199	25HBC336A**50	CNPV*3621A**	58UVB100−20	33,800	11.5	13.5	33,600	3.60	7.8	21,000	2.54
3701187	25HBC336A**50	CNPV*3621A**	58VLR120−20	33,800	11.5	13.5	33,000	3.62	7.8	20,600	2.54
3701186	25HBC336A**50	CNPV*3621A**	58VMR120−20	33,800	11.5	13.5	33,000	3.58	7.8	20,800	2.52
3701121	25HBC336A**50	CNPV*3621A**+TDR		33,800	11.0	13.0	33,800	3.54	7.8	21,800	2.48
3702050	25HBC336A**50	CNPV*3717A**	58CV(A,X)090−16	34,200	11.5	14.0	33,600	3.90	8.0	21,000	2.64
3702053	25HBC336A**50	CNPV*3717A**	58ME(B,C)060−12	34,200	11.5	14.0	33,600	3.94	8.0	21,200	2.66
3702054	25HBC336A**50	CNPV*3717A**	58ME(B,C)080−12	34,200	11.5	14.0	33,600	3.94	8.0	21,200	2.66

See notes on page 45

COMBINATION RATINGS CONTINUED

AHRI Ref. No.	Model Number	Coil Model Number	Furnace Model Number	Cooling Capacity	EER	SEER	High Temp		HSPF	Low Temp	
							E Capacity	E COP		H Capacity	H COP
3702055	25HBC336A**50	CNPV*3717A**	58ME(B,C)080−16	34,200	11.5	14.0	33,600	3.94	8.0	21,200	2.66
3702052	25HBC336A**50	CNPV*3717A**	58MEB040−12	34,200	11.5	14.0	33,600	3.94	8.0	21,200	2.66
3702049	25HBC336A**50	CNPV*3717A**	58MV(B,C)060−14	34,200	11.5	14.0	33,600	3.92	8.0	21,200	2.64
3702051	25HBC336A**50	CNPV*3717A**	58PH*070−16	34,200	11.5	13.5	33,600	3.86	8.0	21,400	2.62
3702085	25HBC336A**50	CNPV*3717A**	58UVB060−14	34,200	11.5	14.0	33,600	3.92	8.0	21,200	2.64
3701848	25HBC336A**50	CNPV*3717A**	58VLR105−12	34,000	11.5	14.0	33,800	3.90	8.0	21,400	2.64
3701847	25HBC336A**50	CNPV*3717A**	58VMR105−12	34,000	11.5	14.0	33,000	3.82	8.0	21,000	2.60
3702048	25HBC336A**50	CNPV*3717A**+TDR		34,200	11.0	13.0	33,800	3.78	8.0	22,200	2.56
3701326	25HBC336A**50	CNPV*4217A**	58CV(A,X)090−16	34,000	11.5	14.0	33,600	3.72	8.0	20,800	2.58
3701329	25HBC336A**50	CNPV*4217A**	58ME(B,C)060−12	34,000	11.5	13.5	33,600	3.76	8.0	21,200	2.60
3701330	25HBC336A**50	CNPV*4217A**	58ME(B,C)080−12	34,000	11.5	14.0	33,600	3.76	8.0	21,000	2.60
3701331	25HBC336A**50	CNPV*4217A**	58ME(B,C)080−16	34,000	11.5	13.5	33,600	3.76	8.0	21,200	2.60
3701328	25HBC336A**50	CNPV*4217A**	58MEB040−12	34,000	11.5	14.0	33,600	3.76	8.0	21,000	2.60
3701325	25HBC336A**50	CNPV*4217A**	58MV(B,C)060−14	34,000	11.5	13.5	33,600	3.74	8.0	21,000	2.60
3701327	25HBC336A**50	CNPV*4217A**	58PH*070−16	34,000	11.5	13.5	33,600	3.68	8.0	21,200	2.56
3701911	25HBC336A**50	CNPV*4217A**	58UVB060−14	34,000	11.5	13.5	33,600	3.74	8.0	21,000	2.60
3701850	25HBC336A**50	CNPV*4217A**	58VLR105−12	34,000	11.5	13.5	33,000	3.72	8.0	21,200	2.58
3701849	25HBC336A**50	CNPV*4217A**	58VMR105−12	34,000	11.5	13.5	33,000	3.66	7.8	21,000	2.56
3701324	25HBC336A**50	CNPV*4217A**+TDR		34,000	11.0	13.0	33,800	3.68	7.8	22,000	2.52
3701336	25HBC336A**50	CNPV*4221A**	58CV(A,X)110−20	34,000	11.5	13.5	33,600	3.68	8.0	20,800	2.58
3701339	25HBC336A**50	CNPV*4221A**	58ME(B,C)100−20	34,000	11.5	14.0	33,000	3.72	8.0	20,800	2.60
3701333	25HBC336A**50	CNPV*4221A**	58MV(B,C)080−14	34,000	11.5	13.5	33,600	3.66	7.8	21,000	2.54
3701334	25HBC336A**50	CNPV*4221A**	58MV(B,C)080−20	34,000	11.5	13.5	33,600	3.66	7.8	21,000	2.56
3701335	25HBC336A**50	CNPV*4221A**	58MV(B,C)100−20	34,000	11.5	13.5	33,600	3.68	8.0	21,000	2.56
3701337	25HBC336A**50	CNPV*4221A**	58PH*090−16	34,000	11.5	14.0	33,600	3.72	8.0	21,000	2.60
3701338	25HBC336A**50	CNPV*4221A**	58PH*110−20	34,000	11.5	14.0	33,600	3.76	8.0	21,000	2.60
3701912	25HBC336A**50	CNPV*4221A**	58UVB080−14	34,000	11.5	13.5	33,600	3.66	7.8	21,000	2.54
3701913	25HBC336A**50	CNPV*4221A**	58UVB080−20	34,000	11.5	13.5	33,600	3.66	7.8	21,000	2.56
3701914	25HBC336A**50	CNPV*4221A**	58UVB100−20	34,000	11.5	13.5	33,600	3.68	8.0	21,000	2.56
3701852	25HBC336A**50	CNPV*4221A**	58VLR120−20	34,000	11.5	14.0	33,000	3.70	7.8	20,800	2.58
3701851	25HBC336A**50	CNPV*4221A**	58VMR120−20	34,000	11.5	13.5	33,000	3.66	7.8	20,800	2.56
3701332	25HBC336A**50	CNPV*4221A**+TDR		34,000	11.0	13.0	33,800	3.62	7.8	22,000	2.50
3702059	25HBC336A**50	CNPV*4324A**	58CV(A,X)135−22	34,200	11.5	14.0	33,600	3.94	8.0	20,800	2.68
3702060	25HBC336A**50	CNPV*4324A**	58CV(A,X)155−22	34,200	11.5	14.0	33,600	3.98	8.0	20,800	2.70
3702061	25HBC336A**50	CNPV*4324A**	58HDV100−−20(DW NFLWONLY)	34,200	11.5	14.0	33,600	4.00	8.0	21,400	2.68
3702058	25HBC336A**50	CNPV*4324A**	58MV(B,C)120−20	34,200	11.5	14.0	33,600	3.92	8.0	21,000	2.66
3702057	25HBC336A**50	CNPV*4324A**	58MVB040−14	34,200	11.5	14.0	33,600	3.86	8.0	21,000	2.62
3702086	25HBC336A**50	CNPV*4324A**	58UVB120−20	34,200	11.5	14.0	33,600	3.92	8.0	21,000	2.66
3702056	25HBC336A**50	CNPV*4324A**+TDR		34,200	11.0	13.0	33,800	3.78	8.0	22,200	2.56
3701162	25HBC336A**50	CSPH*3612A**	58CV(A,X)070−12	33,800	11.5	13.5	33,600	3.70	8.0	21,000	2.56
3701163	25HBC336A**50	CSPH*3612A**	58CV(A,X)090−16	33,800	11.5	14.0	33,600	3.74	8.0	20,800	2.60
3701164	25HBC336A**50	CSPH*3612A**	58CV(A,X)110−20	33,800	11.5	14.0	33,600	3.76	8.0	21,000	2.60
3701165	25HBC336A**50	CSPH*3612A**	58CV(A,X)135−22	33,800	11.5	14.0	33,600	3.76	8.0	20,800	2.60
3701166	25HBC336A**50	CSPH*3612A**	58CV(A,X)155−22	33,800	11.5	14.0	33,600	3.78	8.0	20,800	2.62
3701176	25HBC336A**50	CSPH*3612A**	58HDV040−−12	33,800	11.0	13.0	33,600	3.62	7.8	21,600	2.52
3701177	25HBC336A**50	CSPH*3612A**	58HDV060−−12	33,800	11.5	13.5	33,600	3.70	8.0	21,400	2.56
3701178	25HBC336A**50	CSPH*3612A**	58HDV080−−20	33,800	11.5	13.5	33,600	3.82	8.0	21,600	2.62
3701179	25HBC336A**50	CSPH*3612A**	58HDV100−−20	33,800	11.5	13.5	33,600	3.80	8.0	21,200	2.62
3701172	25HBC336A**50	CSPH*3612A**	58ME(B,C)060−12	33,800	11.5	14.0	33,600	3.78	8.0	21,200	2.62
3701173	25HBC336A**50	CSPH*3612A**	58ME(B,C)080−12	33,800	11.5	14.0	33,600	3.78	8.0	21,000	2.60
3701174	25HBC336A**50	CSPH*3612A**	58ME(B,C)080−16	33,800	11.5	14.0	33,600	3.78	8.0	21,200	2.62
3701175	25HBC336A**50	CSPH*3612A**	58ME(B,C)100−20	33,800	11.5	14.0	33,600	3.78	8.0	20,800	2.62
3701171	25HBC336A**50	CSPH*3612A**	58MEB040−12	33,800	11.5	14.0	33,600	3.78	8.0	21,000	2.62
3701157	25HBC336A**50	CSPH*3612A**	58MV(B,C)060−14	33,800	11.5	13.5	33,600	3.76	8.0	21,000	2.60
3701158	25HBC336A**50	CSPH*3612A**	58MV(B,C)080−14	33,800	11.5	13.5	33,600	3.72	8.0	21,200	2.58
3701159	25HBC336A**50	CSPH*3612A**	58MV(B,C)080−20	33,800	11.5	13.5	33,600	3.72	8.0	21,000	2.58
3701160	25HBC336A**50	CSPH*3612A**	58MV(B,C)100−20	33,800	11.5	14.0	33,600	3.76	8.0	21,000	2.60
3701161	25HBC336A**50	CSPH*3612A**	58MV(B,C)120−20	33,800	11.5	14.0	33,600	3.74	8.0	21,000	2.60
3701156	25HBC336A**50	CSPH*3612A**	58MVB040−14	33,800	11.5	13.5	33,600	3.68	7.8	21,000	2.56
3701167	25HBC336A**50	CSPH*3612A**	58PH*045−08	33,800	11.0	14.0	33,600	3.66	7.8	21,600	2.54
3701168	25HBC336A**50	CSPH*3612A**	58PH*070−16	33,800	11.5	13.5	33,600	3.70	8.0	21,200	2.56
3701169	25HBC336A**50	CSPH*3612A**	58PH*090−16	33,800	11.5	14.0	33,600	3.80	8.0	21,000	2.62
3701170	25HBC336A**50	CSPH*3612A**	58PH*110−20	33,800	11.5	14.0	33,600	3.82	8.0	21,000	2.64
3701871	25HBC336A**50	CSPH*3612A**	58VLR105−12	34,000	11.5	13.5	33,000	3.74	7.8	21,200	2.58
3701873	25HBC336A**50	CSPH*3612A**	58VLR120−20	34,000	11.5	14.0	33,000	3.76	8.0	20,800	2.60
3701870	25HBC336A**50	CSPH*3612A**	58VMR105−12	34,000	11.5	13.5	33,000	3.68	7.8	21,000	2.56
3701872	25HBC336A**50	CSPH*3612A**	58VMR120−20	34,000	11.5	14.0	33,000	3.72	7.8	21,000	2.58
3701155	25HBC336A**50	CSPH*3612A**+TDR		33,800	11.0	13.0	33,800	3.68	7.8	22,000	2.52
3701808	25HBC336A**50	CSPH*4212A**	58CV(A,X)070−12	34,000	11.5	13.5	33,600	3.74	8.0	21,000	2.58
3701809	25HBC336A**50	CSPH*4212A**	58CV(A,X)090−16	34,000	11.5	14.0	33,600	3.78	8.0	21,000	2.62
3701810	25HBC336A**50	CSPH*4212A**	58CV(A,X)110−20	34,000	11.5	14.0	33,600	3.80	8.0	21,000	2.62
3701811	25HBC336A**50	CSPH*4212A**	58CV(A,X)135−22	34,000	11.5	14.0	33,600	3.80	8.0	20,800	2.62
3701812	25HBC336A**50	CSPH*4212A**	58CV(A,X)155−22	34,000	11.5	14.0	33,600	3.82	8.0	20,800	2.64
3701822	25HBC336A**50	CSPH*4212A**	58HDV040−−12	34,000	11.0	13.2	33,600	3.68	8.0	21,600	2.54
3701823	25HBC336A**50	CSPH*4212A**	58HDV060−−12	34,000	11.5	13.5	33,600	3.78	8.0	21,600	2.58
3701824	25HBC336A**50	CSPH*4212A**	58HDV080−−20	34,000	11.5	13.5	33,600	3.90	8.0	21,600	2.64
3701825	25HBC336A**50	CSPH*4212A**	58HDV100−−20	34,000	11.5	14.0	33,600	3.86	8.0	21,200	2.64
3701818	25HBC336A**50	CSPH*4212A**	58ME(B,C)060−12	34,000	11.5	14.0	33,600	3.86	8.0	21,200	2.64
3701819	25HBC336A**50	CSPH*4212A**	58ME(B,C)080−12	34,000	11.5	14.0	33,600	3.84	8.0	21,200	2.64
3701820	25HBC336A**50	CSPH*4212A**	58ME(B,C)080−16	34,000	11.5	14.0	33,600	3.86	8.0	21,200	2.64
3701821	25HBC336A**50	CSPH*4212A**	58ME(B,C)100−20	34,000	11.5	14.0	33,600	3.84	8.0	20,800	2.64
3701817	25HBC336A**50	CSPH*4212A**	58MEB040−12	34,000	11.5	14.0	33,600	3.86	8.0	21,200	2.64
3701803	25HBC336A**50	CSPH*4212A**	58MV(B,C)060−14	34,000	11.5	14.0	33,600	3.82	8.0	21,200	2.62
3701804	25HBC336A**50	CSPH*4212A**	58MV(B,C)080−14	34,000	11.5	13.5	33,600	3.76	8.0	21,200	2.60
3701805	25HBC336A**50	CSPH*4212A**	58MV(B,C)080−20	34,000	11.5	14.0	33,600	3.76	8.0	21,000	2.60
3701806	25HBC336A**50	CSPH*4212A**	58MV(B,C)100−20	34,000	11.5	14.0	33,600	3.80	8.0	21,000	2.62

See notes on page 45

COMBINATION RATINGS CONTINUED

AHRI Ref. No.	Model Number	Coil Model Number	Furnace Model Number	Cooling Capacity	EER	SEER	High Temp		HSPF	Low Temp	
							E Capacity	E COP		H Capacity	H COP
3701807	25HBC336A**50	CSPH*4212A**	58MV(B,C)120−20	34,000	11.5	14.0	33,600	3.78	8.0	21,000	2.62
3701813	25HBC336A**50	CSPH*4212A**	58PH*045−08	34,000	11.0	13.2	33,600	3.72	8.0	21,600	2.54
3701814	25HBC336A**50	CSPH*4212A**	58PH*070−16	34,000	11.5	13.5	33,600	3.76	8.0	21,400	2.58
3701815	25HBC336A**50	CSPH*4212A**	58PH*090−16	34,000	11.5	14.0	33,600	3.86	8.0	21,000	2.64
3701816	25HBC336A**50	CSPH*4212A**	58PH*110−20	34,000	12.0	14.5	33,600	3.90	8.2	21,000	2.66
3701875	25HBC336A**50	CSPH*4212A**	58VLR105−12	34,000	11.5	13.5	33,000	3.80	8.0	21,200	2.60
3701877	25HBC336A**50	CSPH*4212A**	58VLR120−20	34,000	11.5	14.0	33,000	3.80	8.0	20,800	2.62
3701874	25HBC336A**50	CSPH*4212A**	58VMR105−12	34,000	11.5	14.0	33,000	3.72	7.8	21,000	2.58
3701876	25HBC336A**50	CSPH*4212A**	58VMR120−20	34,000	11.5	14.0	33,000	3.76	7.8	21,000	2.60
3701802	25HBC336A**50	CSPH*4212A**+TDR		34,000	11.0	13.0	33,800	3.74	7.8	22,200	2.54
3701915	25HBC336A**60	†FY5BNF036		34,000	11.0	13.0	34,000	3.62	7.8	21,600	2.52
3701999	25HBC336A**60	FB4CNF036		34,000	11.0	13.0	34,000	3.62	7.8	21,400	2.50
3702014	25HBC336A**60	FB4CNF036+TXV		34,000	11.0	13.2	34,000	3.62	7.8	21,400	2.50
3702000	25HBC336A**60	FB4CNF042		34,000	11.0	13.2	34,000	3.86	8.0	21,400	2.64
3702015	25HBC336A**60	FB4CNF042+TXV		34,000	11.5	14.0	34,000	3.86	8.0	21,400	2.64
3702005	25HBC336A**60	FE4AN(B,F)003+UI		34,000	11.5	14.0	33,600	3.68	7.8	20,600	2.58
3702121	25HBC336A**60	FE4AN(B,F)005+UI		34,200	12.0	14.5	33,400	3.90	8.2	20,800	2.68
3702004	25HBC336A**60	FE4ANF002+UI		34,000	11.5	13.5	33,600	3.66	7.8	21,000	2.54
3702006	25HBC336A**60	FF1ENP037		34,000	11.0	13.0	34,000	3.56	7.8	21,800	2.48
3702008	25HBC336A**60	FV4BN(B,F)003		34,000	11.5	14.0	33,000	3.68	7.8	20,600	2.58
3702122	25HBC336A**60	FV4BN(B,F)005		34,200	12.0	14.5	33,400	3.90	8.2	20,800	2.68
3702007	25HBC336A**60	FV4BNF002		34,000	11.5	13.5	33,000	3.66	7.8	21,000	2.54
3702010	25HBC336A**60	FV4CN(B,F)003		34,000	11.5	14.0	33,000	3.68	7.8	20,600	2.58
3702123	25HBC336A**60	FV4CN(B,F)005		34,200	12.0	14.5	33,000	3.90	8.2	20,800	2.68
3702009	25HBC336A**60	FV4CNF002		34,000	11.5	13.5	33,000	3.66	7.8	21,000	2.54
3702012	25HBC336A**60	FX4CN(B,F)036		34,000	11.5	13.5	33,600	3.70	8.0	21,400	2.56
3702013	25HBC336A**60	FX4CN(B,F)042		34,000	11.5	13.5	33,600	3.80	8.2	21,600	2.58
3702002	25HBC336A**60	FX4DN(B,F)037		34,000	11.5	14.0	34,000	3.88	8.0	21,200	2.64
3702003	25HBC336A**60	FX4DN(B,F)043		34,000	11.5	14.0	34,000	3.88	8.0	21,200	2.64
3702011	25HBC336A**60	FY4ANF042		34,000	11.0	13.0	33,600	3.64	7.8	22,000	2.50
3702016	25HBC336A**60	FY5BNF036+TXV		34,000	11.0	13.2	34,000	3.62	7.8	21,600	2.52
3702001	25HBC336A**60	FY5BNF042		34,000	11.0	13.0	33,600	3.74	8.0	21,600	2.56
3702017	25HBC336A**60	FY5BNF042+TXV		34,000	11.0	13.5	33,600	3.74	8.0	21,600	2.56
3701201	25HBC336A**60	CAP**3614A**	58CV(A,X)070−12	33,800	11.5	13.5	33,600	3.56	7.8	21,000	2.50
3701202	25HBC336A**60	CAP**3614A**	58PH*045−08	33,800	11.0	13.0	33,600	3.52	7.8	21,400	2.46
3701200	25HBC336A**60	CAP**3614A**+TDR		33,800	11.0	13.0	34,000	3.52	7.8	21,600	2.46
3701205	25HBC336A**60	CAP**3617A**	58CV(A,X)090−16	33,800	11.5	13.5	33,000	3.62	7.8	20,800	2.54
3701208	25HBC336A**60	CAP**3617A**	58ME(B,C)060−12	33,800	11.5	13.5	33,600	3.66	8.0	21,000	2.56
3701209	25HBC336A**60	CAP**3617A**	58ME(B,C)080−12	33,800	11.5	13.5	33,600	3.66	8.0	20,800	2.56
3701210	25HBC336A**60	CAP**3617A**	58ME(B,C)080−16	33,800	11.5	13.5	33,600	3.66	8.0	21,000	2.56
3701207	25HBC336A**60	CAP**3617A**	58MEB040−12	33,800	11.5	13.5	33,600	3.66	8.0	21,000	2.56
3701204	25HBC336A**60	CAP**3617A**	58MV(B,C)060−14	33,800	11.5	13.5	33,600	3.64	7.8	21,000	2.54
3701206	25HBC336A**60	CAP**3617A**	58PH*070−16	33,800	11.5	13.5	33,600	3.58	7.8	21,200	2.52
3701301	25HBC336A**60	CAP**3617A**	58UVB060−14	33,800	11.5	13.5	33,600	3.64	7.8	21,000	2.54
3701290	25HBC336A**60	CAP**3617A**	58VLR105−12	33,800	11.5	13.5	33,000	3.62	7.8	21,000	2.54
3701289	25HBC336A**60	CAP**3617A**	58VMR105−12	33,800	11.5	13.5	33,000	3.56	7.8	20,800	2.50
3701203	25HBC336A**60	CAP**3617A**+TDR		33,800	11.0	13.0	33,800	3.56	7.8	22,000	2.48
3701220	25HBC336A**60	CAP**3619A**	58HDV040−−12	33,800	11.0	13.0	33,600	3.52	7.8	21,400	2.46
3701221	25HBC336A**60	CAP**3619A**	58HDV060−−12	33,800	11.5	13.5	33,600	3.60	7.8	21,400	2.50
3701219	25HBC336A**60	CAP**3619A**+TDR		33,800	11.0	13.0	33,800	3.56	7.8	21,800	2.48
3701215	25HBC336A**60	CAP**3621A**	58CV(A,X)110−20	33,800	11.5	14.0	33,000	3.64	7.8	20,800	2.56
3701218	25HBC336A**60	CAP**3621A**	58ME(B,C)100−20	33,800	11.5	14.0	33,000	3.70	8.0	20,800	2.58
3701212	25HBC336A**60	CAP**3621A**	58MV(B,C)080−14	33,800	11.5	13.5	33,600	3.62	7.8	20,800	2.54
3701213	25HBC336A**60	CAP**3621A**	58MV(B,C)080−20	33,800	11.5	13.5	33,000	3.62	7.8	20,800	2.54
3701214	25HBC336A**60	CAP**3621A**	58MV(B,C)100−20	33,800	11.5	13.5	33,000	3.64	7.8	20,800	2.56
3701216	25HBC336A**60	CAP**3621A**	58PH*090−16	33,800	11.5	14.0	33,600	3.70	8.0	20,800	2.58
3701217	25HBC336A**60	CAP**3621A**	58PH*110−20	33,800	11.5	14.0	33,600	3.74	8.0	21,000	2.60
3701302	25HBC336A**60	CAP**3621A**	58UVB080−14	33,800	11.5	13.5	33,600	3.62	7.8	20,800	2.54
3701303	25HBC336A**60	CAP**3621A**	58UVB080−20	33,800	11.5	13.5	33,000	3.62	7.8	20,800	2.54
3701304	25HBC336A**60	CAP**3621A**	58UVB100−20	33,800	11.5	13.5	33,000	3.64	7.8	20,800	2.56
3701292	25HBC336A**60	CAP**3621A**	58VLR120−20	33,800	11.5	13.5	33,000	3.66	7.8	20,600	2.56
3701291	25HBC336A**60	CAP**3621A**	58VMR120−20	33,800	11.5	13.5	33,000	3.62	7.8	20,800	2.54
3701211	25HBC336A**60	CAP**3621A**+TDR		33,800	11.0	13.0	33,800	3.56	7.8	21,800	2.48
3701920	25HBC336A**60	CAP**4221A**	58CV(A,X)110−20	34,000	11.5	14.0	33,000	3.68	8.0	20,800	2.58
3701923	25HBC336A**60	CAP**4221A**	58ME(B,C)100−20	34,000	11.5	14.0	33,000	3.74	8.0	20,800	2.60
3701917	25HBC336A**60	CAP**4221A**	58MV(B,C)080−14	34,000	11.5	13.5	33,600	3.66	7.8	21,000	2.56
3701918	25HBC336A**60	CAP**4221A**	58MV(B,C)080−20	34,000	11.5	13.5	33,600	3.66	7.8	20,800	2.56
3701919	25HBC336A**60	CAP**4221A**	58MV(B,C)100−20	34,000	11.5	14.0	33,600	3.68	8.0	21,000	2.58
3701921	25HBC336A**60	CAP**4221A**	58PH*090−16	34,000	11.5	14.0	33,600	3.74	8.0	21,000	2.60
3701922	25HBC336A**60	CAP**4221A**	58PH*110−20	34,000	11.5	14.0	33,600	3.78	8.0	21,000	2.62
3702040	25HBC336A**60	CAP**4221A**	58UVB080−14	34,000	11.5	13.5	33,600	3.66	7.8	21,000	2.56
3702041	25HBC336A**60	CAP**4221A**	58UVB080−20	34,000	11.5	13.5	33,600	3.66	7.8	20,800	2.56
3702042	25HBC336A**60	CAP**4221A**	58UVB100−20	34,000	11.5	14.0	33,600	3.68	8.0	21,000	2.58
3702019	25HBC336A**60	CAP**4221A**	58VLR120−20	34,000	11.5	14.0	33,000	3.70	7.8	20,600	2.58
3702018	25HBC336A**60	CAP**4221A**	58VMR120−20	34,000	11.5	13.5	33,000	3.66	7.8	20,800	2.56
3701916	25HBC336A**60	CAP**4221A**+TDR		34,000	11.0	13.0	33,800	3.60	7.8	22,000	2.50
3701927	25HBC336A**60	CAP**4224A**	58CV(A,X)135−22	34,000	11.5	14.0	33,000	3.70	8.0	20,600	2.58
3701928	25HBC336A**60	CAP**4224A**	58CV(A,X)155−22	34,000	11.5	14.0	33,000	3.74	8.0	20,600	2.60
3701929	25HBC336A**60	CAP**4224A**	58HDV100−−20	34,000	11.5	14.0	33,600	3.76	8.0	21,200	2.60
3701926	25HBC336A**60	CAP**4224A**	58MV(B,C)120−20	34,000	11.5	14.0	33,000	3.70	8.0	20,800	2.58
3701925	25HBC336A**60	CAP**4224A**	58MVB040−14	34,000	11.5	13.5	33,600	3.62	7.8	20,800	2.54
3702043	25HBC336A**60	CAP**4224A**	58UVB120−20	34,000	11.5	14.0	33,000	3.70	8.0	20,800	2.58
3701924	25HBC336A**60	CAP**4224A**+TDR		34,000	11.0	13.0	33,800	3.60	7.8	22,000	2.50
3701263	25HBC336A**60	CNPF*3618A**+TDR		33,800	11.0	13.0	33,800	3.54	7.8	21,800	2.48
3701245	25HBC336A**60	CNPH*3617A**	58CV(A,X)070−12	33,800	11.5	13.5	33,000	3.56	7.8	21,000	2.50
3701246	25HBC336A**60	CNPH*3617A**	58CV(A,X)090−16	33,800	11.5	13.5	33,000	3.60	7.8	20,800	2.54

See notes on page 45

COMBINATION RATINGS CONTINUED

AHRI Ref. No.	Model Number	Coil Model Number	Furnace Model Number	Cooling Capacity	EER	SEER	High Temp		HSPF	Low Temp	
							E Capacity	E COP		H Capacity	H COP
3701247	25HBC336A**60	CNPH*3617A**	58CV(A,X)110−20	33,800	11.5	13.5	33,000	3.60	7.8	20,800	2.54
3701248	25HBC336A**60	CNPH*3617A**	58CV(A,X)135−22	33,800	11.5	13.5	33,000	3.60	7.8	20,800	2.54
3701249	25HBC336A**60	CNPH*3617A**	58CV(A,X)155−22	33,800	11.5	13.5	33,000	3.62	7.8	20,800	2.56
3701259	25HBC336A**60	CNPH*3617A**	58HDV040−−12	33,800	11.0	13.0	33,600	3.48	7.8	21,400	2.46
3701260	25HBC336A**60	CNPH*3617A**	58HDV060−−12	33,800	11.0	13.2	33,600	3.56	7.8	21,400	2.50
3701261	25HBC336A**60	CNPH*3617A**	58HDV080−−20	33,800	11.5	13.5	33,600	3.64	7.8	21,400	2.54
3701262	25HBC336A**60	CNPH*3617A**	58HDV100−−20	33,800	11.5	13.5	33,000	3.62	7.8	21,000	2.54
3701255	25HBC336A**60	CNPH*3617A**	58ME(B,C)060−12	33,800	11.5	13.5	33,000	3.62	7.8	21,000	2.54
3701256	25HBC336A**60	CNPH*3617A**	58ME(B,C)080−12	33,800	11.5	13.5	33,000	3.62	7.8	20,800	2.54
3701257	25HBC336A**60	CNPH*3617A**	58ME(B,C)080−16	33,800	11.5	13.5	33,000	3.62	7.8	21,000	2.54
3701258	25HBC336A**60	CNPH*3617A**	58ME(B,C)100−20	33,800	11.5	13.5	33,000	3.62	7.8	20,600	2.54
3701254	25HBC336A**60	CNPH*3617A**	58MEB040−12	33,800	11.5	13.5	33,000	3.62	7.8	20,800	2.54
3701240	25HBC336A**60	CNPH*3617A**	58MV(B,C)060−14	33,800	11.5	13.5	33,600	3.62	7.8	21,000	2.54
3701241	25HBC336A**60	CNPH*3617A**	58MV(B,C)080−14	33,800	11.5	13.5	33,600	3.58	7.8	21,000	2.52
3701242	25HBC336A**60	CNPH*3617A**	58MV(B,C)080−20	33,800	11.5	13.5	33,000	3.58	7.8	20,800	2.52
3701243	25HBC336A**60	CNPH*3617A**	58MV(B,C)100−20	33,800	11.5	13.5	33,600	3.60	7.8	21,000	2.54
3701244	25HBC336A**60	CNPH*3617A**	58MV(B,C)120−20	33,800	11.5	13.5	33,000	3.60	7.8	20,800	2.54
3701239	25HBC336A**60	CNPH*3617A**	58MVB040−14	33,800	11.5	13.5	33,000	3.54	7.8	21,000	2.50
3701250	25HBC336A**60	CNPH*3617A**	58PH*045−08	33,800	11.0	13.0	33,600	3.52	7.8	21,400	2.46
3701251	25HBC336A**60	CNPH*3617A**	58PH*070−16	33,800	11.5	14.0	33,600	3.56	7.8	21,000	2.50
3701252	25HBC336A**60	CNPH*3617A**	58PH*090−16	33,800	11.5	13.5	33,000	3.64	7.8	20,800	2.54
3701253	25HBC336A**60	CNPH*3617A**	58PH*110−20	33,800	11.5	13.5	33,000	3.66	7.8	20,800	2.56
3701298	25HBC336A**60	CNPH*3617A**	58VLR120−20	33,800	11.5	13.5	33,000	3.62	7.8	20,800	2.54
3701297	25HBC336A**60	CNPH*3617A**	58VMR120−20	33,800	11.5	13.5	33,000	3.58	7.8	20,800	2.52
3701238	25HBC336A**60	CNPH*3617A**+TDR		33,800	11.0	13.0	33,800	3.54	7.8	21,800	2.48
3701953	25HBC336A**60	CNPH*4221A**	58CV(A,X)070−12	34,000	11.5	13.5	33,000	3.64	7.8	21,000	2.54
3701954	25HBC336A**60	CNPH*4221A**	58CV(A,X)090−16	34,000	11.5	14.0	33,000	3.68	7.8	20,800	2.56
3701955	25HBC336A**60	CNPH*4221A**	58CV(A,X)110−20	34,000	11.5	14.0	33,000	3.68	7.8	20,800	2.58
3701956	25HBC336A**60	CNPH*4221A**	58CV(A,X)135−22	34,000	11.5	14.0	33,000	3.68	7.8	20,800	2.58
3701957	25HBC336A**60	CNPH*4221A**	58CV(A,X)155−22	34,000	11.5	14.0	33,000	3.72	8.0	20,800	2.60
3701967	25HBC336A**60	CNPH*4221A**	58HDV040−−12	34,000	11.0	13.5	33,600	3.56	7.8	21,400	2.48
3701968	25HBC336A**60	CNPH*4221A**	58HDV060−−12	34,000	11.0	13.5	33,600	3.64	7.8	21,400	2.52
3701969	25HBC336A**60	CNPH*4221A**	58HDV080−−20	34,000	11.5	13.5	33,600	3.74	8.0	21,400	2.58
3701970	25HBC336A**60	CNPH*4221A**	58HDV100−−20	34,000	11.5	13.5	33,600	3.72	8.0	21,200	2.58
3701963	25HBC336A**60	CNPH*4221A**	58ME(B,C)060−12	34,000	11.5	13.5	33,000	3.72	8.0	21,000	2.58
3701964	25HBC336A**60	CNPH*4221A**	58ME(B,C)080−12	34,000	11.5	13.5	33,000	3.70	8.0	21,000	2.58
3701965	25HBC336A**60	CNPH*4221A**	58ME(B,C)080−16	34,000	11.5	13.5	33,000	3.72	8.0	21,000	2.58
3701966	25HBC336A**60	CNPH*4221A**	58ME(B,C)100−20	34,000	11.5	14.0	33,000	3.72	8.0	20,800	2.60
3701962	25HBC336A**60	CNPH*4221A**	58MEB040−12	34,000	11.5	14.0	33,000	3.72	8.0	21,000	2.58
3701948	25HBC336A**60	CNPH*4221A**	58MV(B,C)060−14	34,000	11.5	13.5	33,600	3.70	7.8	21,000	2.58
3701949	25HBC336A**60	CNPH*4221A**	58MV(B,C)080−14	34,000	11.5	13.5	33,600	3.66	7.8	21,000	2.54
3701950	25HBC336A**60	CNPH*4221A**	58MV(B,C)080−20	34,000	11.5	13.5	33,600	3.66	7.8	21,000	2.56
3701951	25HBC336A**60	CNPH*4221A**	58MV(B,C)100−20	34,000	11.5	13.5	33,000	3.68	8.0	21,000	2.56
3701952	25HBC336A**60	CNPH*4221A**	58MV(B,C)120−20	34,000	11.5	13.5	33,000	3.68	7.8	20,800	2.58
3701947	25HBC336A**60	CNPH*4221A**	58MVB040−14	34,000	11.5	13.5	33,600	3.62	7.8	21,000	2.54
3701958	25HBC336A**60	CNPH*4221A**	58PH*045−08	34,000	11.0	13.2	33,000	3.60	7.8	21,400	2.50
3701959	25HBC336A**60	CNPH*4221A**	58PH*070−16	34,000	11.5	13.5	33,000	3.64	7.8	21,200	2.54
3701960	25HBC336A**60	CNPH*4221A**	58PH*090−16	34,000	11.5	14.0	33,000	3.72	8.0	21,000	2.60
3701961	25HBC336A**60	CNPH*4221A**	58PH*110−20	34,000	11.5	14.0	33,000	3.76	8.0	21,000	2.60
3701300	25HBC336A**60	CNPH*4221A**	58VLR105−12	33,800	11.5	13.5	33,000	3.68	7.8	21,200	2.56
3702027	25HBC336A**60	CNPH*4221A**	58VLR120−20	34,000	11.5	14.0	33,000	3.70	7.8	20,800	2.58
3701299	25HBC336A**60	CNPH*4221A**	58VMR105−12	33,800	11.5	13.5	33,000	3.62	7.8	20,800	2.54
3702026	25HBC336A**60	CNPH*4221A**	58VMR120−20	34,000	11.5	13.5	33,000	3.66	7.8	20,800	2.56
3701946	25HBC336A**60	CNPH*4221A**+TDR		34,000	11.0	13.0	33,800	3.62	7.8	22,000	2.50
3702108	25HBC336A**60	CNPH*4321A**	58CV(A,X)070−12	34,200	11.5	14.0	33,600	3.86	8.0	21,200	2.62
3702109	25HBC336A**60	CNPH*4321A**	58CV(A,X)090−16	34,200	12.0	14.5	33,600	3.90	8.2	21,000	2.66
3702110	25HBC336A**60	CNPH*4321A**	58CV(A,X)110−20	34,200	12.0	14.5	33,600	3.92	8.2	21,000	2.66
3702111	25HBC336A**60	CNPH*4321A**	58CV(A,X)135−22	34,200	12.0	14.5	33,600	3.92	8.2	21,000	2.66
3702112	25HBC336A**60	CNPH*4321A**	58CV(A,X)155−22	34,200	12.0	14.5	33,600	3.96	8.2	20,800	2.68
3701971	25HBC336A**60	CNPH*4321A**	58HDV040−−12	34,000	11.5	13.5	33,600	3.78	8.0	21,800	2.56
3701972	25HBC336A**60	CNPH*4321A**	58HDV060−−12	34,000	11.5	13.5	33,600	3.86	8.2	21,600	2.62
3701973	25HBC336A**60	CNPH*4321A**	58HDV080−−20	34,000	11.5	14.0	33,600	3.96	8.2	21,600	2.68
3701974	25HBC336A**60	CNPH*4321A**	58HDV100−−20	34,000	11.5	14.0	33,600	3.98	8.0	21,400	2.68
3702117	25HBC336A**60	CNPH*4321A**	58ME(B,C)060−12	34,200	12.0	14.5	33,600	3.96	8.2	21,400	2.68
3702118	25HBC336A**60	CNPH*4321A**	58ME(B,C)080−12	34,200	12.0	14.5	33,600	3.96	8.2	21,200	2.68
3702119	25HBC336A**60	CNPH*4321A**	58ME(B,C)080−16	34,200	12.0	14.5	33,600	3.96	8.2	21,400	2.66
3702120	25HBC336A**60	CNPH*4321A**	58ME(B,C)100−20	34,200	12.0	14.5	33,600	3.98	8.2	21,000	2.68
3702116	25HBC336A**60	CNPH*4321A**	58MEB040−12	34,200	12.0	14.5	33,600	3.96	8.2	21,200	2.68
3702103	25HBC336A**60	CNPH*4321A**	58MV(B,C)060−14	34,200	11.5	14.0	33,600	3.92	8.0	21,200	2.66
3702104	25HBC336A**60	CNPH*4321A**	58MV(B,C)080−14	34,200	11.5	14.0	33,600	3.88	8.2	21,200	2.64
3702105	25HBC336A**60	CNPH*4321A**	58MV(B,C)080−20	34,200	11.5	14.0	33,600	3.88	8.2	21,000	2.64
3702106	25HBC336A**60	CNPH*4321A**	58MV(B,C)100−20	34,200	11.5	14.0	33,600	3.92	8.2	21,200	2.66
3702107	25HBC336A**60	CNPH*4321A**	58MV(B,C)120−20	34,200	12.0	14.5	33,600	3.92	8.2	21,000	2.66
3702102	25HBC336A**60	CNPH*4321A**	58MVB040−14	34,200	11.5	14.0	33,600	3.84	8.0	21,200	2.62
3702113	25HBC336A**60	CNPH*4321A**	58PH*070−16	34,200	11.5	14.0	33,600	3.88	8.2	21,400	2.62
3702114	25HBC336A**60	CNPH*4321A**	58PH*090−16	34,200	12.0	14.5	33,600	3.98	8.2	21,200	2.68
3702115	25HBC336A**60	CNPH*4321A**	58PH*110−20	34,200	12.0	14.5	33,600	4.00	8.2	21,200	2.70
3702029	25HBC336A**60	CNPH*4321A**	58VLR105−12	34,000	11.5	14.0	33,800	3.90	8.0	21,200	2.64
3702031	25HBC336A**60	CNPH*4321A**	58VLR120−20	34,000	11.5	14.0	33,000	3.92	8.0	21,000	2.66
3702028	25HBC336A**60	CNPH*4321A**	58VMR105−12	34,000	11.5	14.0	33,000	3.84	8.0	21,000	2.62
3702030	25HBC336A**60	CNPH*4321A**	58VMR120−20	34,000	11.5	14.0	33,000	3.88	8.0	21,000	2.64
3702101	25HBC336A**60	CNPH*4321A**+TDR		34,200	11.0	13.0	33,800	3.78	8.0	22,200	2.56
3701224	25HBC336A**60	CNPV*3617A**	58CV(A,X)090−16	33,800	11.5	13.5	33,000	3.60	7.8	20,800	2.54
3701227	25HBC336A**60	CNPV*3617A**	58ME(B,C)060−12	33,800	11.5	13.5	33,600	3.62	7.8	21,000	2.54
3701228	25HBC336A**60	CNPV*3617A**	58ME(B,C)080−12	33,800	11.5	13.5	33,000	3.62	7.8	20,800	2.54
3701229	25HBC336A**60	CNPV*3617A**	58ME(B,C)080−16	33,800	11.5	13.5	33,600	3.62	7.8	21,000	2.54
3701226	25HBC336A**60	CNPV*3617A**	58MEB040−12	33,800	11.5	13.5	33,000	3.62	7.8	20,800	2.54

See notes on page 45

COMBINATION RATINGS CONTINUED

AHRI Ref. No.	Model Number	Coil Model Number	Furnace Model Number	Cooling Capacity	EER	SEER	High Temp		HSPF	Low Temp	
							E Capacity	E COP		H Capacity	H COP
3701223	25HBC336A**60	CNPV*3617A**	58MV(B,C)060−14	33,800	11.5	13.5	33,600	3.62	7.8	21,000	2.54
3701225	25HBC336A**60	CNPV*3617A**	58PH*070−16	33,800	11.5	13.5	33,600	3.56	7.8	21,000	2.50
3701305	25HBC336A**60	CNPV*3617A**	58UVB060−14	33,800	11.5	13.5	33,600	3.62	7.8	21,000	2.54
3701294	25HBC336A**60	CNPV*3617A**	58VLR105−12	33,800	11.5	13.5	33,000	3.60	7.8	21,200	2.52
3701293	25HBC336A**60	CNPV*3617A**	58VMR105−12	33,800	11.5	13.5	33,000	3.54	7.7	20,800	2.50
3701222	25HBC336A**60	CNPV*3617A**+TDR		33,800	11.0	13.0	33,800	3.54	7.8	21,800	2.48
3701234	25HBC336A**60	CNPV*3621A**	58CV(A,X)110−20	33,800	11.5	13.5	33,000	3.60	7.8	20,800	2.54
3701237	25HBC336A**60	CNPV*3621A**	58ME(B,C)100−20	33,800	11.5	13.5	33,000	3.62	7.8	20,600	2.56
3701231	25HBC336A**60	CNPV*3621A**	58MV(B,C)080−14	33,800	11.5	13.5	33,600	3.58	7.8	21,000	2.52
3701232	25HBC336A**60	CNPV*3621A**	58MV(B,C)080−20	33,800	11.5	13.5	33,000	3.58	7.8	20,800	2.52
3701233	25HBC336A**60	CNPV*3621A**	58MV(B,C)100−20	33,800	11.5	13.5	33,600	3.60	7.8	21,000	2.54
3701235	25HBC336A**60	CNPV*3621A**	58PH*090−16	33,800	11.5	13.5	33,000	3.64	7.8	20,800	2.56
3701236	25HBC336A**60	CNPV*3621A**	58PH*110−20	33,800	11.5	13.5	33,000	3.66	7.8	20,800	2.56
3701306	25HBC336A**60	CNPV*3621A**	58UVB080−14	33,800	11.5	13.5	33,600	3.58	7.8	21,000	2.52
3701307	25HBC336A**60	CNPV*3621A**	58UVB080−20	33,800	11.5	13.5	33,000	3.58	7.8	20,800	2.52
3701308	25HBC336A**60	CNPV*3621A**	58UVB100−20	33,800	11.5	13.5	33,600	3.60	7.8	21,000	2.54
3701296	25HBC336A**60	CNPV*3621A**	58VLR120−20	33,800	11.5	13.5	33,000	3.62	7.8	20,600	2.54
3701295	25HBC336A**60	CNPV*3621A**	58VMR120−20	33,800	11.5	13.5	33,000	3.58	7.8	20,800	2.52
3701230	25HBC336A**60	CNPV*3621A**+TDR		33,800	11.0	13.0	33,800	3.54	7.8	21,800	2.48
3702089	25HBC336A**60	CNPV*3717A**	58CV(A,X)090−16	34,200	11.5	14.0	33,600	3.90	8.0	21,000	2.64
3702092	25HBC336A**60	CNPV*3717A**	58ME(B,C)060−12	34,200	11.5	14.0	33,600	3.94	8.0	21,200	2.66
3702093	25HBC336A**60	CNPV*3717A**	58ME(B,C)080−12	34,200	11.5	14.0	33,600	3.94	8.0	21,200	2.66
3702094	25HBC336A**60	CNPV*3717A**	58ME(B,C)080−16	34,200	11.5	14.0	33,600	3.94	8.0	21,200	2.66
3702091	25HBC336A**60	CNPV*3717A**	58MEB040−12	34,200	11.5	14.0	33,600	3.94	8.0	21,200	2.66
3702088	25HBC336A**60	CNPV*3717A**	58MV(B,C)060−14	34,200	11.5	14.0	33,600	3.92	8.0	21,200	2.64
3702090	25HBC336A**60	CNPV*3717A**	58PH*070−16	34,200	11.5	13.5	33,600	3.86	8.0	21,400	2.62
3702124	25HBC336A**60	CNPV*3717A**	58UVB060−14	34,200	11.5	14.0	33,600	3.92	8.0	21,200	2.64
3702021	25HBC336A**60	CNPV*3717A**	58VLR105−12	34,000	11.5	14.0	33,800	3.90	8.0	21,400	2.64
3702020	25HBC336A**60	CNPV*3717A**	58VMR105−12	34,000	11.5	14.0	33,000	3.82	8.0	21,000	2.60
3702087	25HBC336A**60	CNPV*3717A**+TDR		34,200	11.0	13.0	33,800	3.78	8.0	22,200	2.56
3701932	25HBC336A**60	CNPV*4217A**	58CV(A,X)090−16	34,000	11.5	14.0	33,600	3.72	8.0	20,800	2.58
3701935	25HBC336A**60	CNPV*4217A**	58ME(B,C)060−12	34,000	11.5	13.5	33,600	3.76	8.0	21,200	2.60
3701936	25HBC336A**60	CNPV*4217A**	58ME(B,C)080−12	34,000	11.5	14.0	33,600	3.76	8.0	21,000	2.60
3701937	25HBC336A**60	CNPV*4217A**	58ME(B,C)080−16	34,000	11.5	13.5	33,600	3.76	8.0	21,200	2.60
3701934	25HBC336A**60	CNPV*4217A**	58MEB040−12	34,000	11.5	14.0	33,600	3.76	8.0	21,000	2.60
3701931	25HBC336A**60	CNPV*4217A**	58MV(B,C)060−14	34,000	11.5	13.5	33,600	3.74	8.0	21,000	2.60
3701933	25HBC336A**60	CNPV*4217A**	58PH*070−16	34,000	11.5	13.5	33,600	3.68	8.0	21,200	2.56
3702044	25HBC336A**60	CNPV*4217A**	58UVB060−14	34,000	11.5	13.5	33,600	3.74	8.0	21,000	2.60
3702023	25HBC336A**60	CNPV*4217A**	58VLR105−12	34,000	11.5	13.5	33,000	3.72	8.0	21,200	2.58
3702022	25HBC336A**60	CNPV*4217A**	58VMR105−12	34,000	11.5	13.5	33,000	3.66	7.8	21,000	2.56
3701930	25HBC336A**60	CNPV*4217A**+TDR		34,000	11.0	13.0	33,800	3.68	7.8	22,000	2.52
3701942	25HBC336A**60	CNPV*4221A**	58CV(A,X)110−20	34,000	11.5	13.5	33,600	3.68	8.0	20,800	2.58
3701945	25HBC336A**60	CNPV*4221A**	58ME(B,C)100−20	34,000	11.5	14.0	33,000	3.72	8.0	20,800	2.60
3701939	25HBC336A**60	CNPV*4221A**	58MV(B,C)080−14	34,000	11.5	13.5	33,600	3.66	7.8	21,000	2.54
3701940	25HBC336A**60	CNPV*4221A**	58MV(B,C)080−20	34,000	11.5	13.5	33,600	3.66	7.8	21,000	2.56
3701941	25HBC336A**60	CNPV*4221A**	58MV(B,C)100−20	34,000	11.5	13.5	33,600	3.68	8.0	21,000	2.56
3701943	25HBC336A**60	CNPV*4221A**	58PH*090−16	34,000	11.5	14.0	33,600	3.72	8.0	21,000	2.60
3701944	25HBC336A**60	CNPV*4221A**	58PH*110−20	34,000	11.5	14.0	33,600	3.76	8.0	21,000	2.60
3702045	25HBC336A**60	CNPV*4221A**	58UVB080−14	34,000	11.5	13.5	33,600	3.66	7.8	21,000	2.54
3702046	25HBC336A**60	CNPV*4221A**	58UVB080−20	34,000	11.5	13.5	33,600	3.66	7.8	21,000	2.56
3702047	25HBC336A**60	CNPV*4221A**	58UVB100−20	34,000	11.5	13.5	33,600	3.68	8.0	21,000	2.56
3702025	25HBC336A**60	CNPV*4221A**	58VLR120−20	34,000	11.5	14.0	33,000	3.70	7.8	20,800	2.58
3702024	25HBC336A**60	CNPV*4221A**	58VMR120−20	34,000	11.5	13.5	33,000	3.66	7.8	20,800	2.56
3701938	25HBC336A**60	CNPV*4221A**+TDR		34,000	11.0	13.0	33,800	3.62	7.8	22,000	2.50
3702098	25HBC336A**60	CNPV*4324A**	58CV(A,X)135−22	34,200	11.5	14.0	33,600	3.94	8.0	20,800	2.68
3702099	25HBC336A**60	CNPV*4324A**	58CV(A,X)155−22	34,200	11.5	14.0	33,600	3.98	8.0	20,800	2.70
3702100	25HBC336A**60	CNPV*4324A**	58HDV100−−20 (DWNFLWONLY)	34,200	11.5	14.0	33,600	4.00	8.0	21,400	2.68
3702097	25HBC336A**60	CNPV*4324A**	58MV(B,C)120−20	34,200	11.5	14.0	33,600	3.92	8.0	21,000	2.66
3702096	25HBC336A**60	CNPV*4324A**	58MVB040−14	34,200	11.5	14.0	33,600	3.86	8.0	21,000	2.62
3702125	25HBC336A**60	CNPV*4324A**	58UVB120−20	34,200	11.5	14.0	33,600	3.92	8.0	21,000	2.66
3702095	25HBC336A**60	CNPV*4324A**+TDR		34,200	11.0	13.0	33,800	3.78	8.0	22,200	2.56
3701271	25HBC336A**60	CSPH*3612A**	58CV(A,X)070−12	33,800	11.5	13.5	33,600	3.70	8.0	21,000	2.56
3701272	25HBC336A**60	CSPH*3612A**	58CV(A,X)090−16	33,800	11.5	14.0	33,600	3.74	8.0	20,800	2.60
3701273	25HBC336A**60	CSPH*3612A**	58CV(A,X)110−20	33,800	11.5	14.0	33,600	3.76	8.0	21,000	2.60
3701274	25HBC336A**60	CSPH*3612A**	58CV(A,X)135−22	33,800	11.5	14.0	33,600	3.76	8.0	20,800	2.60
3701275	25HBC336A**60	CSPH*3612A**	58CV(A,X)155−22	33,800	11.5	14.0	33,600	3.78	8.0	20,800	2.62
3701285	25HBC336A**60	CSPH*3612A**	58HDV040−−12	33,800	11.0	13.0	33,600	3.62	7.8	21,600	2.52
3701286	25HBC336A**60	CSPH*3612A**	58HDV060−−12	33,800	11.5	13.5	33,600	3.70	8.0	21,400	2.56
3701287	25HBC336A**60	CSPH*3612A**	58HDV080−−20	33,800	11.5	13.5	33,600	3.82	8.0	21,600	2.62
3701288	25HBC336A**60	CSPH*3612A**	58HDV100−−20	33,800	11.5	13.5	33,600	3.80	8.0	21,200	2.62
3701281	25HBC336A**60	CSPH*3612A**	58ME(B,C)060−12	33,800	11.5	14.0	33,600	3.78	8.0	21,200	2.62
3701282	25HBC336A**60	CSPH*3612A**	58ME(B,C)080−12	33,800	11.5	14.0	33,600	3.78	8.0	21,000	2.60
3701283	25HBC336A**60	CSPH*3612A**	58ME(B,C)080−16	33,800	11.5	14.0	33,600	3.78	8.0	21,200	2.62
3701284	25HBC336A**60	CSPH*3612A**	58ME(B,C)100−20	33,800	11.5	14.0	33,600	3.78	8.0	20,800	2.62
3701280	25HBC336A**60	CSPH*3612A**	58MEB040−12	33,800	11.5	14.0	33,600	3.78	8.0	21,000	2.62
3701266	25HBC336A**60	CSPH*3612A**	58MV(B,C)060−14	33,800	11.5	13.5	33,600	3.76	8.0	21,000	2.60
3701267	25HBC336A**60	CSPH*3612A**	58MV(B,C)080−14	33,800	11.5	13.5	33,600	3.72	8.0	21,200	2.58
3701268	25HBC336A**60	CSPH*3612A**	58MV(B,C)080−20	33,800	11.5	13.5	33,600	3.72	8.0	21,000	2.58
3701269	25HBC336A**60	CSPH*3612A**	58MV(B,C)100−20	33,800	11.5	14.0	33,600	3.76	8.0	21,000	2.60
3701270	25HBC336A**60	CSPH*3612A**	58MV(B,C)120−20	33,800	11.5	14.0	33,600	3.74	8.0	21,000	2.60
3701265	25HBC336A**60	CSPH*3612A**	58MVB040−14	33,800	11.5	13.5	33,600	3.68	7.8	21,000	2.56
3701276	25HBC336A**60	CSPH*3612A**	58PH*045−08	33,800	11.0	14.0	33,600	3.66	7.8	21,600	2.54
3701277	25HBC336A**60	CSPH*3612A**	58PH*070−16	33,800	11.5	13.5	33,600	3.70	8.0	21,200	2.56
3701278	25HBC336A**60	CSPH*3612A**	58PH*090−16	33,800	11.5	14.0	33,600	3.80	8.0	21,000	2.62
3701279	25HBC336A**60	CSPH*3612A**	58PH*110−20	33,800	11.5	14.0	33,600	3.82	8.0	21,000	2.64
3702033	25HBC336A**60	CSPH*3612A**	58VLR105−12	34,000	11.5	13.5	33,000	3.74	7.8	21,200	2.58

See notes on page 45

COMBINATION RATINGS CONTINUED

AHRI Ref. No.	Model Number	Coil Model Number	Furnace Model Number	Cooling Capacity	EER	SEER	High Temp		HSPF	Low Temp	
							E Capacity	E COP		H Capacity	H COP
3702035	25HBC336A**60	CSPH*3612A**	58VLR120−20	34,000	11.5	14.0	33,000	3.76	8.0	20,800	2.60
3702032	25HBC336A**60	CSPH*3612A**	58VMR105−12	34,000	11.5	13.5	33,000	3.68	7.8	21,000	2.56
3702034	25HBC336A**60	CSPH*3612A**	58VMR120−20	34,000	11.5	14.0	33,000	3.72	7.8	21,000	2.58
3701264	25HBC336A**60	CSPH*3612A**+TDR		33,800	11.0	13.0	33,800	3.68	7.8	22,000	2.52
3701981	25HBC336A**60	CSPH*4212A**	58CV(A,X)070−12	34,000	11.5	13.5	33,600	3.74	8.0	21,000	2.58
3701982	25HBC336A**60	CSPH*4212A**	58CV(A,X)090−16	34,000	11.5	14.0	33,600	3.78	8.0	21,000	2.62
3701983	25HBC336A**60	CSPH*4212A**	58CV(A,X)110−20	34,000	11.5	14.0	33,600	3.80	8.0	21,000	2.62
3701984	25HBC336A**60	CSPH*4212A**	58CV(A,X)135−22	34,000	11.5	14.0	33,600	3.80	8.0	20,800	2.62
3701985	25HBC336A**60	CSPH*4212A**	58CV(A,X)155−22	34,000	11.5	14.0	33,600	3.82	8.0	20,800	2.64
3701995	25HBC336A**60	CSPH*4212A**	58HDV040−−12	34,000	11.0	13.2	33,600	3.68	8.0	21,600	2.54
3701996	25HBC336A**60	CSPH*4212A**	58HDV060−−12	34,000	11.5	13.5	33,600	3.78	8.0	21,600	2.58
3701997	25HBC336A**60	CSPH*4212A**	58HDV080−−20	34,000	11.5	13.5	33,600	3.90	8.0	21,600	2.64
3701998	25HBC336A**60	CSPH*4212A**	58HDV100−−20	34,000	11.5	14.0	33,600	3.86	8.0	21,200	2.64
3701991	25HBC336A**60	CSPH*4212A**	58ME(B,C)060−12	34,000	11.5	14.0	33,600	3.86	8.0	21,200	2.64
3701992	25HBC336A**60	CSPH*4212A**	58ME(B,C)080−12	34,000	11.5	14.0	33,600	3.84	8.0	21,200	2.64
3701993	25HBC336A**60	CSPH*4212A**	58ME(B,C)080−16	34,000	11.5	14.0	33,600	3.86	8.0	21,200	2.64
3701994	25HBC336A**60	CSPH*4212A**	58ME(B,C)100−20	34,000	11.5	14.0	33,600	3.84	8.0	20,800	2.64
3701990	25HBC336A**60	CSPH*4212A**	58MEB040−12	34,000	11.5	14.0	33,600	3.86	8.0	21,200	2.64
3701976	25HBC336A**60	CSPH*4212A**	58MV(B,C)060−14	34,000	11.5	14.0	33,600	3.82	8.0	21,200	2.62
3701977	25HBC336A**60	CSPH*4212A**	58MV(B,C)080−14	34,000	11.5	13.5	33,600	3.76	8.0	21,200	2.60
3701978	25HBC336A**60	CSPH*4212A**	58MV(B,C)080−20	34,000	11.5	14.0	33,600	3.76	8.0	21,000	2.60
3701979	25HBC336A**60	CSPH*4212A**	58MV(B,C)100−20	34,000	11.5	14.0	33,600	3.80	8.0	21,000	2.62
3701980	25HBC336A**60	CSPH*4212A**	58MV(B,C)120−20	34,000	11.5	14.0	33,600	3.78	8.0	21,000	2.62
3701986	25HBC336A**60	CSPH*4212A**	58PH*045−08	34,000	11.0	13.2	33,600	3.72	8.0	21,600	2.54
3701987	25HBC336A**60	CSPH*4212A**	58PH*070−16	34,000	11.5	13.5	33,600	3.76	8.0	21,400	2.58
3701988	25HBC336A**60	CSPH*4212A**	58PH*090−16	34,000	11.5	14.0	33,600	3.86	8.0	21,000	2.64
3701989	25HBC336A**60	CSPH*4212A**	58PH*110−20	34,000	12.0	14.5	33,600	3.90	8.2	21,000	2.66
3702037	25HBC336A**60	CSPH*4212A**	58VLR105−12	34,000	11.5	13.5	33,000	3.80	8.0	21,200	2.60
3702039	25HBC336A**60	CSPH*4212A**	58VLR120−20	34,000	11.5	14.0	33,000	3.80	8.0	20,800	2.62
3702036	25HBC336A**60	CSPH*4212A**	58VMR105−12	34,000	11.5	14.0	33,000	3.72	7.8	21,000	2.58
3702038	25HBC336A**60	CSPH*4212A**	58VMR120−20	34,000	11.5	14.0	33,000	3.76	7.8	21,000	2.60
3701975	25HBC336A**60	CSPH*4212A**+TDR		34,000	11.0	13.0	33,800	3.74	7.8	22,200	2.54
3699499	25HBC342(A,W)**30	†FY5BNF042		41,000	11.0	13.0	40,500	3.68	7.8	24,000	2.42
3699500	25HBC342(A,W)**30	FB4CNF042		41,000	11.0	13.0	40,000	3.72	7.8	23,800	2.46
3699145	25HBC342(A,W)**30	FB4CNF042+TXV		41,000	11.5	13.5	40,000	3.72	7.8	23,800	2.46
3699501	25HBC342(A,W)**30	FB4CNF048		41,000	11.0	13.5	39,500	3.74	7.8	23,600	2.48
3699146	25HBC342(A,W)**30	FB4CNF048+TXV		41,000	11.5	14.0	39,500	3.74	7.8	23,600	2.48
3699132	25HBC342(A,W)**30	FE4AN(B,F)003+UI		40,000	11.5	14.0	39,000	3.62	7.8	23,000	2.42
3699133	25HBC342(A,W)**30	FE4AN(B,F)005+UI		41,000	12.0	14.5	39,000	3.82	8.2	23,200	2.52
3699134	25HBC342(A,W)**30	FE4ANB006+UI		41,000	12.5	15.0	39,000	3.92	8.2	23,200	2.58
3699135	25HBC342(A,W)**30	FV4BN(B,F)003		40,000	11.5	14.0	39,000	3.62	7.7	23,000	2.42
3699136	25HBC342(A,W)**30	FV4BN(B,F)005		41,000	11.5	14.0	39,000	3.82	7.8	23,200	2.52
3699137	25HBC342(A,W)**30	FV4BNB006		41,000	12.5	15.0	39,000	3.92	8.2	23,200	2.58
3699138	25HBC342(A,W)**30	FV4CN(B,F)003		40,000	11.5	14.0	39,000	3.62	7.7	23,000	2.42
3699139	25HBC342(A,W)**30	FV4CN(B,F)005		41,000	11.5	14.0	39,000	3.82	7.8	23,200	2.52
3699140	25HBC342(A,W)**30	FV4CNB006		41,000	12.0	14.5	39,000	3.92	8.2	23,200	2.58
3699143	25HBC342(A,W)**30	FX4CN(B,F)042		41,000	11.5	13.5	39,500	3.70	7.8	23,800	2.44
3699144	25HBC342(A,W)**30	FX4CN(B,F)048		41,000	12.0	14.5	40,000	3.84	8.2	23,800	2.52
3699130	25HBC342(A,W)**30	FX4DN(B,F)043		41,000	11.5	14.0	40,000	3.74	8.0	23,800	2.46
3699131	25HBC342(A,W)**30	FX4DN(B,F)049		41,000	12.0	14.5	40,000	3.88	8.2	23,600	2.54
3699141	25HBC342(A,W)**30	FY4ANF042		40,000	11.0	13.0	40,000	3.56	7.7	24,400	2.34
3699142	25HBC342(A,W)**30	FY4ANF048		41,000	11.0	13.2	40,000	3.64	7.8	24,600	2.40
3699147	25HBC342(A,W)**30	FY5BNF042+TXV		41,000	11.0	13.5	40,500	3.68	7.8	24,000	2.42
3699502	25HBC342(A,W)**30	FY5BNF048		41,000	11.5	13.5	40,000	3.74	7.8	24,200	2.46
3699148	25HBC342(A,W)**30	FY5BNF048+TXV		41,000	11.0	13.5	40,000	3.74	7.8	24,200	2.46
3698926	25HBC342(A,W)**30	CAP**4221A**	58CV(A,X)110−20	40,000	11.5	13.5	39,000	3.60	7.7	23,000	2.42
3698929	25HBC342(A,W)**30	CAP**4221A**	58ME(B,C)100−20	40,000	11.5	14.0	39,000	3.66	7.8	23,200	2.44
3698923	25HBC342(A,W)**30	CAP**4221A**	58MV(B,C)080−14	40,000	11.0	13.5	39,000	3.54	7.7	23,400	2.38
3698924	25HBC342(A,W)**30	CAP**4221A**	58MV(B,C)080−20	40,000	11.0	13.5	39,000	3.56	7.7	23,200	2.38
3698925	25HBC342(A,W)**30	CAP**4221A**	58MV(B,C)100−20	40,000	11.0	13.5	39,000	3.54	7.7	23,000	2.38
3698927	25HBC342(A,W)**30	CAP**4221A**	58PH*090−16	40,000	11.5	14.0	39,000	3.62	7.7	23,200	2.42
3698928	25HBC342(A,W)**30	CAP**4221A**	58PH*110−20	40,000	11.5	14.0	39,000	3.64	7.8	23,000	2.44
3699451	25HBC342(A,W)**30	CAP**4221A**	58UVB080−14	40,000	11.0	13.5	39,000	3.54	7.7	23,400	2.38
3699452	25HBC342(A,W)**30	CAP**4221A**	58UVB080−20	40,000	11.0	13.5	39,000	3.56	7.7	23,200	2.38
3699453	25HBC342(A,W)**30	CAP**4221A**	58UVB100−20	40,000	11.0	13.5	39,000	3.54	7.7	23,000	2.38
3699150	25HBC342(A,W)**30	CAP**4221A**	58VLR120−20	40,000	11.5	13.5	39,000	3.60	7.7	23,000	2.42
3699149	25HBC342(A,W)**30	CAP**4221A**	58VMR120−20	39,500	11.5	13.5	39,000	3.58	7.7	23,000	2.40
3698922	25HBC342(A,W)**30	CAP**4221A**+TDR		40,000	11.0	13.0	40,500	3.54	7.7	24,200	2.36
3698933	25HBC342(A,W)**30	CAP**4224A**	58CV(A,X)135−22	40,000	11.5	14.0	39,000	3.64	7.8	23,000	2.44
3698934	25HBC342(A,W)**30	CAP**4224A**	58CV(A,X)155−22	40,000	11.5	14.0	39,000	3.64	7.8	22,800	2.44
3698937	25HBC342(A,W)**30	CAP**4224A**	58HDV100−−20	40,000	11.5	14.0	39,000	3.62	7.8	23,200	2.42
3698936	25HBC342(A,W)**30	CAP**4224A**	58ME(B,C)120−20	40,000	11.5	14.0	39,000	3.70	7.8	23,200	2.46
3698932	25HBC342(A,W)**30	CAP**4224A**	58MV(B,C)120−20	40,000	11.5	13.5	39,000	3.60	7.7	23,000	2.42
3698931	25HBC342(A,W)**30	CAP**4224A**	58MVB040−14	40,000	11.0	13.5	39,000	3.54	7.7	23,200	2.38
3698935	25HBC342(A,W)**30	CAP**4224A**	58PH*135−20	40,000	11.5	14.0	39,000	3.64	7.8	23,200	2.44
3699454	25HBC342(A,W)**30	CAP**4224A**	58UVB120−20	40,000	11.5	13.5	39,000	3.60	7.7	23,000	2.42
3698930	25HBC342(A,W)**30	CAP**4224A**+TDR		40,000	11.0	13.0	39,000	3.54	7.7	24,200	2.36
3698940	25HBC342(A,W)**30	CAP**4817A**	58CV(A,X)090−16	41,000	11.5	14.0	39,000	3.74	7.8	23,400	2.46
3698943	25HBC342(A,W)**30	CAP**4817A**	58ME(B,C)060−12	41,000	11.5	14.0	40,000	3.76	7.8	23,600	2.46
3698944	25HBC342(A,W)**30	CAP**4817A**	58ME(B,C)080−12	41,000	11.5	14.0	40,000	3.76	7.8	23,600	2.48
3698945	25HBC342(A,W)**30	CAP**4817A**	58ME(B,C)080−16	41,000	11.5	14.0	40,000	3.74	7.8	23,400	2.46
3698942	25HBC342(A,W)**30	CAP**4817A**	58MEB040−12	41,000	11.5	14.0	40,000	3.76	7.8	23,600	2.48
3698939	25HBC342(A,W)**30	CAP**4817A**	58MV(B,C)060−14	41,000	11.5	14.0	40,000	3.74	7.8	23,600	2.46
3698941	25HBC342(A,W)**30	CAP**4817A**	58PH*070−16	41,000	11.5	13.5	40,000	3.66	7.8	24,000	2.42
3699455	25HBC342(A,W)**30	CAP**4817A**	58UVB060−14	41,000	11.5	14.0	40,000	3.74	7.8	23,600	2.46
3698938	25HBC342(A,W)**30	CAP**4817A**+TDR		41,000	11.0	13.0	40,500	3.70	7.8	24,600	2.42

See notes on page 45

COMBINATION RATINGS CONTINUED

AHRI Ref. No.	Model Number	Coil Model Number	Furnace Model Number	Cooling Capacity	EER	SEER	High Temp		HSPF	Low Temp	
							E Capacity	E COP		H Capacity	H COP
3698950	25HBC342(A,W)**30	CAP**4821A**	58CV(A,X)110−20	40,000	11.5	14.0	39,000	3.70	7.8	23,200	2.46
3698953	25HBC342(A,W)**30	CAP**4821A**	58ME(B,C)100−20	41,000	11.5	14.0	39,000	3.74	7.8	23,200	2.48
3698947	25HBC342(A,W)**30	CAP**4821A**	58MV(B,C)080−14	40,000	11.0	13.5	40,000	3.64	7.8	23,600	2.42
3698948	25HBC342(A,W)**30	CAP**4821A**	58MV(B,C)080−20	40,000	11.5	13.5	39,000	3.66	7.8	23,400	2.42
3698949	25HBC342(A,W)**30	CAP**4821A**	58MV(B,C)100−20	40,000	11.5	13.5	39,000	3.64	7.8	23,200	2.42
3698951	25HBC342(A,W)**30	CAP**4821A**	58PH*090−16	41,000	11.5	14.0	39,000	3.72	7.8	23,400	2.46
3698952	25HBC342(A,W)**30	CAP**4821A**	58PH*110−20	41,000	11.5	14.0	39,000	3.74	7.8	23,200	2.48
3699456	25HBC342(A,W)**30	CAP**4821A**	58UVB080−14	40,000	11.0	13.5	40,000	3.64	7.8	23,600	2.42
3699457	25HBC342(A,W)**30	CAP**4821A**	58UVB080−20	40,000	11.5	13.5	39,000	3.66	7.8	23,400	2.42
3699458	25HBC342(A,W)**30	CAP**4821A**	58UVB100−20	40,000	11.5	13.5	39,000	3.64	7.8	23,200	2.42
3699152	25HBC342(A,W)**30	CAP**4821A**	58VLR120−20	40,000	11.5	14.0	39,000	3.70	7.8	23,200	2.46
3699151	25HBC342(A,W)**30	CAP**4821A**	58VMR120−20	40,000	11.5	14.0	39,000	3.68	7.7	23,200	2.44
3698946	25HBC342(A,W)**30	CAP**4821A**+TDR		41,000	11.0	13.0	40,000	3.66	7.8	24,400	2.40
3698963	25HBC342(A,W)**30	CAP**4823A**	58HDV080−−20	41,000	11.5	13.5	40,000	3.72	7.8	23,800	2.46
3698962	25HBC342(A,W)**30	CAP**4823A**+TDR		41,000	11.0	13.0	40,000	3.66	7.8	24,400	2.40
3698957	25HBC342(A,W)**30	CAP**4824A**	58CV(A,X)135−22	41,000	11.5	14.0	39,000	3.74	7.8	23,000	2.48
3698958	25HBC342(A,W)**30	CAP**4824A**	58CV(A,X)155−22	41,000	11.5	14.0	39,000	3.74	7.8	23,000	2.48
3698961	25HBC342(A,W)**30	CAP**4824A**	58HDV100−−20	41,000	11.5	14.0	40,000	3.74	7.8	23,400	2.46
3698960	25HBC342(A,W)**30	CAP**4824A**	58ME(B,C)120−20	41,000	11.5	14.0	39,000	3.80	8.0	23,200	2.52
3698956	25HBC342(A,W)**30	CAP**4824A**	58MV(B,C)120−20	40,000	11.5	14.0	39,000	3.70	7.8	23,200	2.46
3698955	25HBC342(A,W)**30	CAP**4824A**	58MVB040−14	40,000	11.5	13.5	39,000	3.64	7.8	23,400	2.42
3698959	25HBC342(A,W)**30	CAP**4824A**	58PH*135−20	41,000	11.5	14.0	39,000	3.76	7.8	23,400	2.48
3699459	25HBC342(A,W)**30	CAP**4824A**	58UVB120−20	40,000	11.5	14.0	39,000	3.70	7.8	23,200	2.46
3698954	25HBC342(A,W)**30	CAP**4824A**+TDR		41,000	11.0	13.0	39,000	3.66	7.8	24,400	2.40
3699079	25HBC342(A,W)**30	CNPF*4818A**+TDR		41,000	11.0	13.0	39,000	3.60	7.8	24,400	2.38
3699011	25HBC342(A,W)**30	CNPH*4221A**	58CV(A,X)070−12	40,000	11.0	13.5	39,000	3.52	7.7	23,400	2.36
3699012	25HBC342(A,W)**30	CNPH*4221A**	58CV(A,X)090−16	40,000	11.5	13.5	39,000	3.58	7.7	23,200	2.40
3699013	25HBC342(A,W)**30	CNPH*4221A**	58CV(A,X)110−20	40,000	11.5	13.5	39,000	3.60	7.7	23,200	2.40
3699014	25HBC342(A,W)**30	CNPH*4221A**	58CV(A,X)135−22	40,000	11.5	14.0	39,000	3.62	7.7	23,000	2.42
3699015	25HBC342(A,W)**30	CNPH*4221A**	58CV(A,X)155−22	40,000	11.5	14.0	39,000	3.62	7.7	23,000	2.42
3699026	25HBC342(A,W)**30	CNPH*4221A**	58HDV060−−12	40,000	11.0	13.2	39,000	3.52	7.7	23,800	2.34
3699027	25HBC342(A,W)**30	CNPH*4221A**	58HDV080−−20	40,000	11.0	13.5	39,000	3.62	7.7	23,600	2.40
3699028	25HBC342(A,W)**30	CNPH*4221A**	58HDV100−−20	40,000	11.0	13.5	39,000	3.60	7.7	23,200	2.40
3699021	25HBC342(A,W)**30	CNPH*4221A**	58ME(B,C)060−12	40,000	11.0	13.5	39,000	3.60	7.7	23,400	2.40
3699022	25HBC342(A,W)**30	CNPH*4221A**	58ME(B,C)080−12	40,000	11.0	13.5	39,000	3.62	7.7	23,400	2.42
3699023	25HBC342(A,W)**30	CNPH*4221A**	58ME(B,C)080−16	40,000	11.0	13.5	39,000	3.58	7.7	23,200	2.40
3699024	25HBC342(A,W)**30	CNPH*4221A**	58ME(B,C)100−20	40,000	11.5	14.0	39,000	3.64	7.8	23,200	2.44
3699025	25HBC342(A,W)**30	CNPH*4221A**	58ME(B,C)120−20	40,000	11.5	14.0	39,000	3.66	7.8	23,000	2.44
3699020	25HBC342(A,W)**30	CNPH*4221A**	58MEB040−12	40,000	11.0	13.5	39,000	3.62	7.7	23,400	2.42
3699006	25HBC342(A,W)**30	CNPH*4221A**	58MV(B,C)060−14	40,000	11.0	13.5	39,000	3.60	7.7	23,400	2.40
3699007	25HBC342(A,W)**30	CNPH*4221A**	58MV(B,C)080−14	40,000	11.0	13.5	39,000	3.54	7.7	23,400	2.36
3699008	25HBC342(A,W)**30	CNPH*4221A**	58MV(B,C)080−20	40,000	11.0	13.5	39,000	3.56	7.7	23,400	2.38
3699009	25HBC342(A,W)**30	CNPH*4221A**	58MV(B,C)100−20	40,000	11.0	13.5	39,000	3.54	7.7	23,200	2.38
3699010	25HBC342(A,W)**30	CNPH*4221A**	58MV(B,C)120−20	40,000	11.5	13.5	39,000	3.58	7.7	23,200	2.40
3699005	25HBC342(A,W)**30	CNPH*4221A**	58MVB040−14	40,000	11.5	13.5	39,000	3.52	7.7	23,400	2.36
3699016	25HBC342(A,W)**30	CNPH*4221A**	58PH*070−16	40,000	11.0	13.2	39,000	3.52	7.7	23,800	2.36
3699017	25HBC342(A,W)**30	CNPH*4221A**	58PH*090−16	40,000	11.5	13.5	39,000	3.60	7.7	23,200	2.42
3699018	25HBC342(A,W)**30	CNPH*4221A**	58PH*110−20	40,000	11.5	13.5	39,000	3.62	7.7	23,000	2.42
3699019	25HBC342(A,W)**30	CNPH*4221A**	58PH*135−20	40,000	11.5	13.5	39,000	3.60	7.7	23,200	2.42
3699158	25HBC342(A,W)**30	CNPH*4221A**	58VLR120−20	40,000	11.5	13.5	39,000	3.58	7.7	23,000	2.40
3699157	25HBC342(A,W)**30	CNPH*4221A**	58VMR120−20	39,500	11.5	13.5	39,000	3.56	7.7	23,000	2.40
3699004	25HBC342(A,W)**30	CNPH*4221A**+TDR		40,000	11.0	13.0	39,000	3.56	7.7	24,200	2.36
3699036	25HBC342(A,W)**30	CNPH*4321A**	58CV(A,X)070−12	41,000	11.5	14.0	39,000	3.72	7.8	23,600	2.46
3699037	25HBC342(A,W)**30	CNPH*4321A**	58CV(A,X)090−16	41,000	11.5	14.0	39,000	3.78	7.8	23,400	2.50
3699038	25HBC342(A,W)**30	CNPH*4321A**	58CV(A,X)110−20	41,000	11.5	14.0	39,000	3.80	8.0	23,400	2.50
3699039	25HBC342(A,W)**30	CNPH*4321A**	58CV(A,X)135−22	41,000	12.0	14.5	39,000	3.84	8.2	23,200	2.52
3699040	25HBC342(A,W)**30	CNPH*4321A**	58CV(A,X)155−22	41,000	12.0	14.5	39,000	3.82	8.2	23,200	2.52
3699051	25HBC342(A,W)**30	CNPH*4321A**	58HDV060−−12	41,000	11.0	13.5	40,000	3.72	7.8	24,000	2.44
3699052	25HBC342(A,W)**30	CNPH*4321A**	58HDV080−−20	41,000	11.5	14.0	39,500	3.82	8.2	24,000	2.50
3699053	25HBC342(A,W)**30	CNPH*4321A**	58HDV100−−20	41,000	11.5	14.0	39,500	3.82	7.8	23,600	2.50
3699046	25HBC342(A,W)**30	CNPH*4321A**	58ME(B,C)060−12	41,000	11.5	14.0	39,500	3.82	8.0	23,800	2.50
3699047	25HBC342(A,W)**30	CNPH*4321A**	58ME(B,C)080−12	41,000	12.0	14.5	39,500	3.82	8.2	23,600	2.50
3699048	25HBC342(A,W)**30	CNPH*4321A**	58ME(B,C)080−16	41,000	11.5	14.0	39,500	3.80	8.0	23,600	2.50
3699049	25HBC342(A,W)**30	CNPH*4321A**	58ME(B,C)100−20	41,000	12.0	14.5	39,500	3.86	8.2	23,400	2.54
3699050	25HBC342(A,W)**30	CNPH*4321A**	58ME(B,C)120−20	41,000	12.0	14.5	39,500	3.88	8.2	23,400	2.54
3699045	25HBC342(A,W)**30	CNPH*4321A**	58MEB040−12	41,000	12.0	14.5	39,500	3.82	8.2	23,800	2.50
3699031	25HBC342(A,W)**30	CNPH*4321A**	58MV(B,C)060−14	41,000	11.5	14.0	39,000	3.80	8.0	23,600	2.50
3699032	25HBC342(A,W)**30	CNPH*4321A**	58MV(B,C)080−14	41,000	11.5	14.0	39,000	3.74	7.8	23,600	2.46
3699033	25HBC342(A,W)**30	CNPH*4321A**	58MV(B,C)080−20	41,000	11.5	14.0	39,000	3.76	7.8	23,600	2.48
3699034	25HBC342(A,W)**30	CNPH*4321A**	58MV(B,C)100−20	41,000	11.5	14.0	39,000	3.74	7.8	23,400	2.46
3699035	25HBC342(A,W)**30	CNPH*4321A**	58MV(B,C)120−20	41,000	11.5	14.0	39,000	3.78	7.8	23,400	2.50
3699030	25HBC342(A,W)**30	CNPH*4321A**	58MVB040−14	41,000	11.5	14.0	39,000	3.72	7.8	23,600	2.46
3699041	25HBC342(A,W)**30	CNPH*4321A**	58PH*070−16	41,000	11.0	13.5	39,500	3.72	7.8	24,000	2.44
3699042	25HBC342(A,W)**30	CNPH*4321A**	58PH*090−16	41,000	11.5	14.0	39,500	3.82	7.8	23,400	2.52
3699043	25HBC342(A,W)**30	CNPH*4321A**	58PH*110−20	41,000	12.0	14.5	39,500	3.84	8.2	23,400	2.54
3699044	25HBC342(A,W)**30	CNPH*4321A**	58PH*135−20	41,000	12.0	14.5	39,500	3.84	8.2	23,400	2.52
3699160	25HBC342(A,W)**30	CNPH*4321A**	58VLR120−20	41,000	11.5	14.0	39,000	3.80	7.8	23,400	2.50
3699159	25HBC342(A,W)**30	CNPH*4321A**	58VMR120−20	40,000	11.5	14.0	39,000	3.76	7.7	23,400	2.48
3699029	25HBC342(A,W)**30	CNPH*4321A**+TDR		41,000	11.0	13.0	39,000	3.74	7.8	24,600	2.44
3699061	25HBC342(A,W)**30	CNPH*4821A**	58CV(A,X)070−12	40,000	11.5	13.5	39,000	3.64	7.8	23,400	2.42
3699062	25HBC342(A,W)**30	CNPH*4821A**	58CV(A,X)090−16	41,000	11.5	14.0	39,000	3.70	7.8	23,200	2.46
3699063	25HBC342(A,W)**30	CNPH*4821A**	58CV(A,X)110−20	41,000	11.5	14.0	39,000	3.72	7.8	23,200	2.48
3699064	25HBC342(A,W)**30	CNPH*4821A**	58CV(A,X)135−22	41,000	11.5	14.0	39,000	3.76	7.8	23,200	2.50
3699065	25HBC342(A,W)**30	CNPH*4821A**	58CV(A,X)155−22	41,000	11.5	14.0	39,000	3.74	7.8	23,000	2.50
3699076	25HBC342(A,W)**30	CNPH*4821A**	58HDV060−−12	41,000	11.5	13.5	39,000	3.64	7.8	24,000	2.40
3699077	25HBC342(A,W)**30	CNPH*4821A**	58HDV080−−20	41,000	11.5	14.0	39,000	3.76	7.8	23,800	2.48
3699078	25HBC342(A,W)**30	CNPH*4821A**	58HDV100−−20	41,000	11.5	14.0	39,000	3.74	7.8	23,400	2.48

See notes on page 45

COMBINATION RATINGS CONTINUED

AHRI Ref. No.	Model Number	Coil Model Number	Furnace Model Number	Cooling Capacity	EER	SEER	High Temp		HSPF	Low Temp	
							E Capacity	E COP		H Capacity	H COP
3699071	25HBC342(A,W)**30	CNPH*4821A**	58ME(B,C)060−12	41,000	11.5	14.0	39,000	3.74	7.8	23,600	2.46
3699072	25HBC342(A,W)**30	CNPH*4821A**	58ME(B,C)080−12	41,000	11.5	14.0	39,000	3.74	7.8	23,600	2.48
3699073	25HBC342(A,W)**30	CNPH*4821A**	58ME(B,C)080−16	41,000	11.5	14.0	39,000	3.72	7.8	23,400	2.46
3699074	25HBC342(A,W)**30	CNPH*4821A**	58ME(B,C)100−20	41,000	11.5	14.0	39,000	3.78	7.8	23,400	2.50
3699075	25HBC342(A,W)**30	CNPH*4821A**	58ME(B,C)120−20	41,000	11.5	14.0	39,000	3.80	7.8	23,200	2.52
3699070	25HBC342(A,W)**30	CNPH*4821A**	58MEB040−12	41,000	11.5	14.0	39,000	3.74	7.8	23,600	2.48
3699056	25HBC342(A,W)**30	CNPH*4821A**	58MV(B,C)060−14	41,000	11.5	14.0	39,000	3.72	7.8	23,400	2.46
3699057	25HBC342(A,W)**30	CNPH*4821A**	58MV(B,C)080−14	40,000	11.5	13.5	39,000	3.66	7.8	23,400	2.44
3699058	25HBC342(A,W)**30	CNPH*4821A**	58MV(B,C)080−20	41,000	11.5	13.5	39,000	3.68	7.8	23,400	2.44
3699059	25HBC342(A,W)**30	CNPH*4821A**	58MV(B,C)100−20	40,000	11.5	14.0	39,000	3.66	7.8	23,200	2.44
3699060	25HBC342(A,W)**30	CNPH*4821A**	58MV(B,C)120−20	41,000	11.5	14.0	39,000	3.72	7.8	23,200	2.46
3699055	25HBC342(A,W)**30	CNPH*4821A**	58MVB040−14	40,000	11.5	13.5	39,000	3.64	7.8	23,400	2.42
3699066	25HBC342(A,W)**30	CNPH*4821A**	58PH*070−16	41,000	11.0	13.5	39,000	3.64	7.8	24,000	2.40
3699067	25HBC342(A,W)**30	CNPH*4821A**	58PH*090−16	41,000	11.5	14.0	39,000	3.74	7.8	23,400	2.48
3699068	25HBC342(A,W)**30	CNPH*4821A**	58PH*110−20	41,000	11.5	14.0	39,000	3.78	7.8	23,200	2.50
3699069	25HBC342(A,W)**30	CNPH*4821A**	58PH*135−20	41,000	11.5	14.0	39,000	3.76	7.8	23,400	2.48
3699162	25HBC342(A,W)**30	CNPH*4821A**	58VLR120−20	40,000	11.5	14.0	39,000	3.72	7.8	23,200	2.48
3699161	25HBC342(A,W)**30	CNPH*4821A**	58VMR120−20	40,000	11.5	14.0	39,000	3.70	7.8	23,200	2.46
3699054	25HBC342(A,W)**30	CNPH*4821A**+TDR		41,000	11.0	13.0	40,000	3.66	7.8	24,400	2.40
3698966	25HBC342(A,W)**30	CNPV*4217A**	58CV(A,X)090−16	40,000	11.5	13.5	39,000	3.64	7.8	23,200	2.42
3698969	25HBC342(A,W)**30	CNPV*4217A**	58ME(B,C)060−12	40,000	11.0	13.5	39,000	3.66	7.8	23,600	2.42
3698970	25HBC342(A,W)**30	CNPV*4217A**	58ME(B,C)080−12	40,000	11.5	13.5	39,000	3.66	7.8	23,400	2.44
3698971	25HBC342(A,W)**30	CNPV*4217A**	58ME(B,C)080−16	40,000	11.5	13.5	39,000	3.64	7.8	23,400	2.42
3698968	25HBC342(A,W)**30	CNPV*4217A**	58MEB040−12	40,000	11.5	13.5	39,000	3.66	7.8	23,600	2.44
3698965	25HBC342(A,W)**30	CNPV*4217A**	58MV(B,C)060−14	40,000	11.0	13.5	39,000	3.64	7.8	23,600	2.42
3698967	25HBC342(A,W)**30	CNPV*4217A**	58PH*070−16	40,000	11.0	13.2	39,000	3.56	7.7	23,800	2.38
3699460	25HBC342(A,W)**30	CNPV*4217A**	58UVB060−14	40,000	11.0	13.5	39,000	3.64	7.8	23,600	2.42
3698964	25HBC342(A,W)**30	CNPV*4217A**+TDR		40,000	11.0	13.0	40,000	3.60	7.8	24,400	2.38
3698976	25HBC342(A,W)**30	CNPV*4221A**	58CV(A,X)110−20	40,000	11.0	13.5	39,000	3.60	7.7	23,200	2.40
3698979	25HBC342(A,W)**30	CNPV*4221A**	58ME(B,C)100−20	40,000	11.5	14.0	39,000	3.64	7.7	23,200	2.44
3698973	25HBC342(A,W)**30	CNPV*4221A**	58MV(B,C)080−14	40,000	11.0	13.5	39,000	3.54	7.7	23,400	2.36
3698974	25HBC342(A,W)**30	CNPV*4221A**	58MV(B,C)080−20	40,000	11.0	13.5	39,000	3.56	7.7	23,400	2.38
3698975	25HBC342(A,W)**30	CNPV*4221A**	58MV(B,C)100−20	40,000	11.0	13.5	39,000	3.54	7.7	23,200	2.38
3698977	25HBC342(A,W)**30	CNPV*4221A**	58PH*090−16	40,000	11.5	13.5	39,000	3.60	7.7	23,200	2.42
3698978	25HBC342(A,W)**30	CNPV*4221A**	58PH*110−20	40,000	11.5	14.0	39,000	3.62	7.7	23,000	2.42
3699461	25HBC342(A,W)**30	CNPV*4221A**	58UVB080−14	40,000	11.0	13.5	39,000	3.54	7.7	23,400	2.36
3699462	25HBC342(A,W)**30	CNPV*4221A**	58UVB080−20	40,000	11.0	13.5	39,000	3.56	7.7	23,400	2.38
3699463	25HBC342(A,W)**30	CNPV*4221A**	58UVB100−20	40,000	11.0	13.5	39,000	3.54	7.7	23,200	2.38
3699154	25HBC342(A,W)**30	CNPV*4221A**	58VLR120−20	40,000	11.5	13.5	39,000	3.58	7.7	23,000	2.40
3699153	25HBC342(A,W)**30	CNPV*4221A**	58VMR120−20	39,500	11.5	13.5	39,000	3.56	7.7	23,000	2.40
3698972	25HBC342(A,W)**30	CNPV*4221A**+TDR		40,000	11.0	13.0	40,000	3.56	7.7	24,200	2.36
3698983	25HBC342(A,W)**30	CNPV*4324A**	58CV(A,X)135−22	41,000	12.0	14.5	39,000	3.84	8.2	23,200	2.54
3698984	25HBC342(A,W)**30	CNPV*4324A**	58CV(A,X)155−22	41,000	12.0	14.5	39,000	3.84	8.2	23,200	2.54
3698987	25HBC342(A,W)**30	CNPV*4324A**	58HDV100−−20 (DWNFLWONLY)	41,000	12.0	14.5	39,500	3.84	8.2	23,600	2.52
3698986	25HBC342(A,W)**30	CNPV*4324A**	58ME(B,C)120−20	41,000	12.0	14.5	39,500	3.90	8.2	23,400	2.56
3698982	25HBC342(A,W)**30	CNPV*4324A**	58MV(B,C)120−20	41,000	11.5	14.0	39,000	3.80	7.8	23,400	2.50
3698981	25HBC342(A,W)**30	CNPV*4324A**	58MVB040−14	41,000	11.5	14.0	39,500	3.74	7.8	23,400	2.46
3698985	25HBC342(A,W)**30	CNPV*4324A**	58PH*135−20	41,000	12.0	14.5	39,500	3.86	8.2	23,400	2.54
3699464	25HBC342(A,W)**30	CNPV*4324A**	58UVB120−20	41,000	11.5	14.0	39,000	3.80	7.8	23,400	2.50
3698980	25HBC342(A,W)**30	CNPV*4324A**+TDR		41,000	11.0	13.0	40,000	3.74	7.8	24,600	2.44
3698992	25HBC342(A,W)**30	CNPV*4821A**	58CV(A,X)110−20	41,000	11.5	14.0	39,000	3.72	7.8	23,200	2.48
3698995	25HBC342(A,W)**30	CNPV*4821A**	58ME(B,C)100−20	41,000	11.5	14.0	39,000	3.78	7.8	23,400	2.50
3698989	25HBC342(A,W)**30	CNPV*4821A**	58MV(B,C)080−14	40,000	11.5	13.5	39,000	3.66	7.8	23,400	2.44
3698990	25HBC342(A,W)**30	CNPV*4821A**	58MV(B,C)080−20	41,000	11.5	13.5	39,000	3.68	7.8	23,400	2.44
3698991	25HBC342(A,W)**30	CNPV*4821A**	58MV(B,C)100−20	40,000	11.5	14.0	39,000	3.66	7.8	23,200	2.44
3698993	25HBC342(A,W)**30	CNPV*4821A**	58PH*090−16	41,000	11.5	14.0	39,000	3.74	7.8	23,400	2.48
3698994	25HBC342(A,W)**30	CNPV*4821A**	58PH*110−20	41,000	11.5	14.0	39,000	3.78	7.8	23,200	2.50
3699465	25HBC342(A,W)**30	CNPV*4821A**	58UVB080−14	40,000	11.5	13.5	39,000	3.66	7.8	23,400	2.44
3699466	25HBC342(A,W)**30	CNPV*4821A**	58UVB080−20	41,000	11.5	13.5	39,000	3.68	7.8	23,400	2.44
3699467	25HBC342(A,W)**30	CNPV*4821A**	58UVB100−20	40,000	11.5	14.0	39,000	3.66	7.8	23,200	2.44
3699156	25HBC342(A,W)**30	CNPV*4821A**	58VLR120−20	40,000	11.5	14.0	39,000	3.72	7.8	23,200	2.48
3699155	25HBC342(A,W)**30	CNPV*4821A**	58VMR120−20	40,000	11.5	14.0	39,000	3.70	7.8	23,200	2.46
3698988	25HBC342(A,W)**30	CNPV*4821A**+TDR		41,000	11.0	13.0	40,000	3.66	7.8	24,400	2.40
3698999	25HBC342(A,W)**30	CNPV*4824A**	58CV(A,X)135−22	41,000	11.5	14.0	39,000	3.76	7.8	23,200	2.50
3699000	25HBC342(A,W)**30	CNPV*4824A**	58CV(A,X)155−22	41,000	11.5	14.0	39,000	3.74	7.8	23,000	2.50
3699003	25HBC342(A,W)**30	CNPV*4824A**	58HDV100−−20(DW NFLWONLY)	41,000	11.5	14.0	39,000	3.74	7.8	23,400	2.48
3699002	25HBC342(A,W)**30	CNPV*4824A**	58ME(B,C)120−20	41,000	11.5	14.0	39,000	3.80	8.0	23,200	2.52
3698998	25HBC342(A,W)**30	CNPV*4824A**	58MV(B,C)120−20	41,000	11.5	14.0	39,000	3.72	7.8	23,200	2.46
3698997	25HBC342(A,W)**30	CNPV*4824A**	58MVB040−14	40,000	11.5	13.5	39,000	3.64	7.8	23,400	2.42
3699001	25HBC342(A,W)**30	CNPV*4824A**	58PH*135−20	41,000	11.5	14.0	39,000	3.76	7.8	23,400	2.48
3699468	25HBC342(A,W)**30	CNPV*4824A**	58UVB120−20	41,000	11.5	14.0	39,000	3.72	7.8	23,200	2.46
3698996	25HBC342(A,W)**30	CNPV*4824A**+TDR		41,000	11.0	13.0	40,000	3.66	7.8	24,400	2.40
3699087	25HBC342(A,W)**30	CSPH*4212A**	58CV(A,X)070−12	40,000	11.0	13.5	39,000	3.64	7.8	23,600	2.42
3699088	25HBC342(A,W)**30	CSPH*4212A**	58CV(A,X)090−16	40,000	11.5	14.0	39,000	3.70	7.8	23,200	2.46
3699089	25HBC342(A,W)**30	CSPH*4212A**	58CV(A,X)110−20	40,000	11.5	14.0	39,000	3.72	7.8	23,400	2.46
3699090	25HBC342(A,W)**30	CSPH*4212A**	58CV(A,X)135−22	40,000	11.5	14.0	39,000	3.74	7.8	23,200	2.48
3699091	25HBC342(A,W)**30	CSPH*4212A**	58CV(A,X)155−22	40,000	11.5	14.0	39,000	3.74	7.8	23,200	2.48
3699102	25HBC342(A,W)**30	CSPH*4212A**	58HDV060−−12	40,000	11.0	13.5	39,000	3.64	7.8	24,000	2.40
3699103	25HBC342(A,W)**30	CSPH*4212A**	58HDV080−−20	40,000	11.5	13.5	39,000	3.74	7.8	23,800	2.46
3699104	25HBC342(A,W)**30	CSPH*4212A**	58HDV100−−20	40,000	11.5	14.0	39,000	3.72	7.8	23,400	2.46
3699097	25HBC342(A,W)**30	CSPH*4212A**	58ME(B,C)060−12	40,000	11.5	14.0	39,000	3.72	7.8	23,600	2.46
3699098	25HBC342(A,W)**30	CSPH*4212A**	58ME(B,C)080−12	40,000	11.5	14.0	39,000	3.74	7.8	23,600	2.46
3699099	25HBC342(A,W)**30	CSPH*4212A**	58ME(B,C)080−16	40,000	11.5	14.0	39,000	3.72	7.8	23,400	2.46
3699100	25HBC342(A,W)**30	CSPH*4212A**	58ME(B,C)100−20	40,000	11.5	14.0	39,000	3.76	7.8	23,400	2.48
3699101	25HBC342(A,W)**30	CSPH*4212A**	58ME(B,C)120−20	40,000	11.5	14.0	39,000	3.78	7.8	23,200	2.50

See notes on page 45

COMBINATION RATINGS CONTINUED

AHRI Ref. No.	Model Number	Coil Model Number	Furnace Model Number	Cooling Capacity	EER	SEER	High Temp		HSPF	Low Temp	
							E Capacity	E COP		H Capacity	H COP
3699096	25HBC342(A,W)**30	CSPH*4212A**	58MEB040−12	40,000	11.5	14.0	39,000	3.74	7.8	23,600	2.46
3699082	25HBC342(A,W)**30	CSPH*4212A**	58MV(B,C)060−14	40,000	11.5	14.0	39,000	3.72	7.8	23,600	2.46
3699083	25HBC342(A,W)**30	CSPH*4212A**	58MV(B,C)080−14	40,000	11.0	13.5	39,000	3.64	7.8	23,600	2.42
3699084	25HBC342(A,W)**30	CSPH*4212A**	58MV(B,C)080−20	40,000	11.5	13.5	39,000	3.68	7.8	23,600	2.44
3699085	25HBC342(A,W)**30	CSPH*4212A**	58MV(B,C)100−20	40,000	11.5	13.5	39,000	3.66	7.8	23,400	2.42
3699086	25HBC342(A,W)**30	CSPH*4212A**	58MV(B,C)120−20	40,000	11.5	14.0	39,000	3.70	7.8	23,200	2.46
3699081	25HBC342(A,W)**30	CSPH*4212A**	58MVB040−14	40,000	11.5	13.5	39,000	3.64	7.8	23,400	2.42
3699092	25HBC342(A,W)**30	CSPH*4212A**	58PH*070−16	40,000	11.0	13.5	39,000	3.64	7.8	24,000	2.40
3699093	25HBC342(A,W)**30	CSPH*4212A**	58PH*090−16	40,000	11.5	14.0	39,000	3.74	7.8	23,400	2.48
3699094	25HBC342(A,W)**30	CSPH*4212A**	58PH*110−20	40,000	11.5	14.0	39,000	3.76	7.8	23,200	2.48
3699095	25HBC342(A,W)**30	CSPH*4212A**	58PH*135−20	40,000	11.5	14.0	39,000	3.74	7.8	23,400	2.48
3699164	25HBC342(A,W)**30	CSPH*4212A**	58VLR120−20	40,000	11.5	14.0	39,000	3.70	7.8	23,200	2.46
3699163	25HBC342(A,W)**30	CSPH*4212A**	58VMR120−20	40,000	11.5	14.0	39,000	3.68	7.8	23,200	2.46
3699080	25HBC342(A,W)**30	CSPH*4212A**+TDR		40,000	11.0	13.0	39,000	3.66	7.8	24,400	2.40
3699112	25HBC342(A,W)**30	CSPH*4812A**	58CV(A,X)070−12	41,000	11.5	13.5	39,000	3.66	7.8	23,600	2.42
3699113	25HBC342(A,W)**30	CSPH*4812A**	58CV(A,X)090−16	41,000	11.5	14.0	39,000	3.72	7.8	23,400	2.48
3699114	25HBC342(A,W)**30	CSPH*4812A**	58CV(A,X)110−20	41,000	11.5	14.0	39,000	3.74	7.8	23,400	2.48
3699115	25HBC342(A,W)**30	CSPH*4812A**	58CV(A,X)135−22	41,000	11.5	14.0	39,000	3.76	7.8	23,200	2.50
3699116	25HBC342(A,W)**30	CSPH*4812A**	58CV(A,X)155−22	41,000	11.5	14.0	39,000	3.76	7.8	23,200	2.50
3699127	25HBC342(A,W)**30	CSPH*4812A**	58HDV060−−12	41,000	11.0	13.5	40,000	3.66	7.8	24,000	2.42
3699128	25HBC342(A,W)**30	CSPH*4812A**	58HDV080−−20	41,000	11.5	14.0	40,000	3.76	7.8	23,800	2.48
3699129	25HBC342(A,W)**30	CSPH*4812A**	58HDV100−−20	41,000	11.5	14.0	39,000	3.76	7.8	23,600	2.48
3699122	25HBC342(A,W)**30	CSPH*4812A**	58ME(B,C)060−12	41,000	11.5	14.0	39,000	3.76	7.8	23,600	2.48
3699123	25HBC342(A,W)**30	CSPH*4812A**	58ME(B,C)080−12	41,000	11.5	14.0	39,000	3.76	7.8	23,600	2.48
3699124	25HBC342(A,W)**30	CSPH*4812A**	58ME(B,C)080−16	41,000	11.5	14.0	39,000	3.74	7.8	23,400	2.48
3699125	25HBC342(A,W)**30	CSPH*4812A**	58ME(B,C)100−20	41,000	11.5	14.0	39,000	3.78	7.8	23,400	2.50
3699126	25HBC342(A,W)**30	CSPH*4812A**	58ME(B,C)120−20	41,000	11.5	14.0	39,000	3.82	7.8	23,400	2.52
3699121	25HBC342(A,W)**30	CSPH*4812A**	58MEB040−12	41,000	11.5	14.0	39,000	3.76	7.8	23,600	2.48
3699107	25HBC342(A,W)**30	CSPH*4812A**	58MV(B,C)060−14	41,000	11.5	14.0	39,500	3.74	7.8	23,600	2.46
3699108	25HBC342(A,W)**30	CSPH*4812A**	58MV(B,C)080−14	41,000	11.5	13.5	39,500	3.68	7.8	23,600	2.44
3699109	25HBC342(A,W)**30	CSPH*4812A**	58MV(B,C)080−20	41,000	11.5	13.5	39,500	3.70	7.8	23,600	2.44
3699110	25HBC342(A,W)**30	CSPH*4812A**	58MV(B,C)100−20	41,000	11.5	14.0	39,000	3.68	7.8	23,400	2.44
3699111	25HBC342(A,W)**30	CSPH*4812A**	58MV(B,C)120−20	41,000	11.5	14.0	39,000	3.72	7.8	23,400	2.48
3699106	25HBC342(A,W)**30	CSPH*4812A**	58MVB040−14	41,000	11.5	13.5	39,000	3.66	7.8	23,600	2.42
3699117	25HBC342(A,W)**30	CSPH*4812A**	58PH*070−16	41,000	11.5	13.5	40,000	3.66	7.8	24,000	2.42
3699118	25HBC342(A,W)**30	CSPH*4812A**	58PH*090−16	41,000	11.5	14.0	39,000	3.76	7.8	23,400	2.48
3699119	25HBC342(A,W)**30	CSPH*4812A**	58PH*110−20	41,000	11.5	14.0	39,000	3.78	7.8	23,400	2.50
3699120	25HBC342(A,W)**30	CSPH*4812A**	58PH*135−20	41,000	11.5	14.0	39,000	3.76	7.8	23,400	2.48
3699166	25HBC342(A,W)**30	CSPH*4812A**	58VLR120−20	40,000	11.5	14.0	39,000	3.74	7.8	23,200	2.48
3699165	25HBC342(A,W)**30	CSPH*4812A**	58VMR120−20	40,000	11.5	14.0	39,000	3.70	7.8	23,200	2.46
3699105	25HBC342(A,W)**30	CSPH*4812A**+TDR		41,000	11.0	13.0	40,500	3.68	7.8	24,400	2.42
3701354	25HBC342A**50	†FY5BNF042		41,000	11.0	13.0	40,500	3.68	7.8	24,000	2.42
3701563	25HBC342A**50	FB4CNF042		41,000	11.0	13.0	40,000	3.72	7.8	23,800	2.46
3701581	25HBC342A**50	FB4CNF042+TXV		41,000	11.5	13.5	40,000	3.72	7.8	23,800	2.46
3701564	25HBC342A**50	FB4CNF048		41,000	11.0	13.5	39,500	3.74	7.8	23,600	2.48
3701582	25HBC342A**50	FB4CNF048+TXV		41,000	11.5	14.0	39,500	3.74	7.8	23,600	2.48
3701568	25HBC342A**50	FE4AN(B,F)003+UI		40,000	11.5	14.0	39,000	3.62	7.8	23,000	2.42
3701569	25HBC342A**50	FE4AN(B,F)005+UI		41,000	12.0	14.5	39,000	3.82	8.2	23,200	2.52
3701570	25HBC342A**50	FE4ANB006+UI		41,000	12.5	15.0	39,000	3.92	8.2	23,200	2.58
3701571	25HBC342A**50	FV4BN(B,F)003		40,000	11.5	14.0	39,000	3.62	7.7	23,000	2.42
3701572	25HBC342A**50	FV4BN(B,F)005		41,000	11.5	14.0	39,000	3.82	7.8	23,200	2.52
3701573	25HBC342A**50	FV4BNB006		41,000	12.5	15.0	39,000	3.92	8.2	23,200	2.58
3701574	25HBC342A**50	FV4CN(B,F)003		40,000	11.5	14.0	39,000	3.62	7.7	23,000	2.42
3701575	25HBC342A**50	FV4CN(B,F)005		41,000	11.5	14.0	39,000	3.82	7.8	23,200	2.52
3701576	25HBC342A**50	FV4CNB006		41,000	12.0	14.5	39,000	3.92	8.2	23,200	2.58
3701579	25HBC342A**50	FX4CN(B,F)042		41,000	11.5	13.5	39,500	3.70	7.8	23,800	2.44
3701580	25HBC342A**50	FX4CN(B,F)048		41,000	12.0	14.5	40,000	3.84	8.2	23,800	2.52
3701566	25HBC342A**50	FX4DN(B,F)043		41,000	11.5	14.0	40,000	3.74	8.0	23,800	2.46
3701567	25HBC342A**50	FX4DN(B,F)049		41,000	12.0	14.5	40,000	3.88	8.2	23,600	2.54
3701577	25HBC342A**50	FY4ANF042		40,000	11.0	13.0	40,000	3.56	7.7	24,400	2.34
3701578	25HBC342A**50	FY4ANF048		41,000	11.0	13.2	40,000	3.64	7.8	24,600	2.40
3701583	25HBC342A**50	FY5BNF042+TXV		41,000	11.0	13.5	40,500	3.68	7.8	24,000	2.42
3701565	25HBC342A**50	FY5BNF048		41,000	11.5	13.5	40,000	3.74	7.8	24,200	2.46
3701584	25HBC342A**50	FY5BNF048+TXV		41,000	11.0	13.5	40,000	3.74	7.8	24,200	2.46
3701359	25HBC342A**50	CAP**4221A**	58CV(A,X)110−20	40,000	11.5	13.5	39,000	3.60	7.7	23,000	2.42
3701362	25HBC342A**50	CAP**4221A**	58ME(B,C)100−20	40,000	11.5	14.0	39,000	3.66	7.8	23,200	2.44
3701356	25HBC342A**50	CAP**4221A**	58MV(B,C)080−14	40,000	11.0	13.5	39,000	3.54	7.7	23,400	2.38
3701357	25HBC342A**50	CAP**4221A**	58MV(B,C)080−20	40,000	11.0	13.5	39,000	3.56	7.7	23,200	2.38
3701358	25HBC342A**50	CAP**4221A**	58MV(B,C)100−20	40,000	11.0	13.5	39,000	3.54	7.7	23,000	2.38
3701360	25HBC342A**50	CAP**4221A**	58PH*090−16	40,000	11.5	14.0	39,000	3.62	7.7	23,200	2.42
3701361	25HBC342A**50	CAP**4221A**	58PH*110−20	40,000	11.5	14.0	39,000	3.64	7.8	23,000	2.44
3701882	25HBC342A**50	CAP**4221A**	58UVB080−14	40,000	11.0	13.5	39,000	3.54	7.7	23,400	2.38
3701883	25HBC342A**50	CAP**4221A**	58UVB080−20	40,000	11.0	13.5	39,000	3.56	7.7	23,200	2.38
3701884	25HBC342A**50	CAP**4221A**	58UVB100−20	40,000	11.0	13.5	39,000	3.54	7.7	23,000	2.38
3701586	25HBC342A**50	CAP**4221A**	58VLR120−20	40,000	11.5	13.5	39,000	3.60	7.7	23,000	2.42
3701585	25HBC342A**50	CAP**4221A**	58VMR120−20	39,500	11.5	13.5	39,000	3.58	7.7	23,000	2.40
3701355	25HBC342A**50	CAP**4221A**+TDR		40,000	11.0	13.0	40,500	3.54	7.7	24,200	2.36
3701366	25HBC342A**50	CAP**4224A**	58CV(A,X)135−22	40,000	11.5	14.0	39,000	3.64	7.8	23,000	2.44
3701367	25HBC342A**50	CAP**4224A**	58CV(A,X)155−22	40,000	11.5	14.0	39,000	3.64	7.8	22,800	2.44
3701370	25HBC342A**50	CAP**4224A**	58HDV100−−20	40,000	11.5	14.0	39,000	3.62	7.8	23,200	2.42
3701369	25HBC342A**50	CAP**4224A**	58ME(B,C)120−20	40,000	11.5	14.0	39,000	3.70	7.8	23,200	2.46
3701365	25HBC342A**50	CAP**4224A**	58MV(B,C)120−20	40,000	11.5	13.5	39,000	3.60	7.7	23,000	2.42
3701364	25HBC342A**50	CAP**4224A**	58MVB040−14	40,000	11.0	13.5	39,000	3.54	7.7	23,200	2.38
3701368	25HBC342A**50	CAP**4224A**	58PH*135−20	40,000	11.5	14.0	39,000	3.64	7.8	23,200	2.44
3701885	25HBC342A**50	CAP**4224A**	58UVB120−20	40,000	11.5	13.5	39,000	3.60	7.7	23,000	2.42
3701363	25HBC342A**50	CAP**4224A**+TDR		40,000	11.0	13.0	39,000	3.54	7.7	24,200	2.36

See notes on page 45

COMBINATION RATINGS CONTINUED

AHRI Ref. No.	Model Number	Coil Model Number	Furnace Model Number	Cooling Capacity	EER	SEER	High Temp		HSPF	Low Temp	
							E Capacity	E COP		H Capacity	H COP
3701373	25HBC342A**50	CAP**4817A**	58CV(A,X)090−16	41,000	11.5	14.0	39,000	3.74	7.8	23,400	2.46
3701376	25HBC342A**50	CAP**4817A**	58ME(B,C)060−12	41,000	11.5	14.0	40,000	3.76	7.8	23,600	2.46
3701377	25HBC342A**50	CAP**4817A**	58ME(B,C)080−12	41,000	11.5	14.0	40,000	3.76	7.8	23,600	2.48
3701378	25HBC342A**50	CAP**4817A**	58ME(B,C)080−16	41,000	11.5	14.0	40,000	3.74	7.8	23,400	2.46
3701375	25HBC342A**50	CAP**4817A**	58MEB040−12	41,000	11.5	14.0	40,000	3.76	7.8	23,600	2.48
3701372	25HBC342A**50	CAP**4817A**	58MV(B,C)060−14	41,000	11.5	14.0	40,000	3.74	7.8	23,600	2.46
3701374	25HBC342A**50	CAP**4817A**	58PH*070−16	41,000	11.5	13.5	40,000	3.66	7.8	24,000	2.42
3701886	25HBC342A**50	CAP**4817A**	58UVB060−14	41,000	11.5	14.0	40,000	3.74	7.8	23,600	2.46
3701371	25HBC342A**50	CAP**4817A**+TDR		41,000	11.0	13.0	40,500	3.70	7.8	24,600	2.42
3701383	25HBC342A**50	CAP**4821A**	58CV(A,X)110−20	40,000	11.5	14.0	39,000	3.70	7.8	23,200	2.46
3701386	25HBC342A**50	CAP**4821A**	58ME(B,C)100−20	41,000	11.5	14.0	39,000	3.74	7.8	23,200	2.48
3701380	25HBC342A**50	CAP**4821A**	58MV(B,C)080−14	40,000	11.0	13.5	40,000	3.64	7.8	23,600	2.42
3701381	25HBC342A**50	CAP**4821A**	58MV(B,C)080−20	40,000	11.5	13.5	39,000	3.66	7.8	23,400	2.42
3701382	25HBC342A**50	CAP**4821A**	58MV(B,C)100−20	40,000	11.5	13.5	39,000	3.64	7.8	23,200	2.42
3701384	25HBC342A**50	CAP**4821A**	58PH*090−16	41,000	11.5	14.0	39,000	3.72	7.8	23,400	2.46
3701385	25HBC342A**50	CAP**4821A**	58PH*110−20	41,000	11.5	14.0	39,000	3.74	7.8	23,200	2.48
3701887	25HBC342A**50	CAP**4821A**	58UVB080−14	40,000	11.0	13.5	40,000	3.64	7.8	23,600	2.42
3701888	25HBC342A**50	CAP**4821A**	58UVB080−20	40,000	11.5	13.5	39,000	3.66	7.8	23,400	2.42
3701889	25HBC342A**50	CAP**4821A**	58UVB100−20	40,000	11.5	13.5	39,000	3.64	7.8	23,200	2.42
3701588	25HBC342A**50	CAP**4821A**	58VLR120−20	40,000	11.5	14.0	39,000	3.70	7.8	23,200	2.46
3701587	25HBC342A**50	CAP**4821A**	58VMR120−20	40,000	11.5	14.0	39,000	3.68	7.7	23,200	2.44
3701379	25HBC342A**50	CAP**4821A**+TDR		41,000	11.0	13.0	40,000	3.66	7.8	24,400	2.40
3701396	25HBC342A**50	CAP**4823A**	58HDV080−−20	41,000	11.5	13.5	40,000	3.72	7.8	23,800	2.46
3701395	25HBC342A**50	CAP**4823A**+TDR		41,000	11.0	13.0	40,000	3.66	7.8	24,400	2.40
3701390	25HBC342A**50	CAP**4824A**	58CV(A,X)135−22	41,000	11.5	14.0	39,000	3.74	7.8	23,000	2.48
3701391	25HBC342A**50	CAP**4824A**	58CV(A,X)155−22	41,000	11.5	14.0	39,000	3.74	7.8	23,000	2.48
3701394	25HBC342A**50	CAP**4824A**	58HDV100−−20	41,000	11.5	14.0	40,000	3.74	7.8	23,400	2.46
3701393	25HBC342A**50	CAP**4824A**	58ME(B,C)120−20	41,000	11.5	14.0	39,000	3.80	8.0	23,200	2.52
3701389	25HBC342A**50	CAP**4824A**	58MV(B,C)120−20	40,000	11.5	14.0	39,000	3.70	7.8	23,200	2.46
3701388	25HBC342A**50	CAP**4824A**	58MVB040−14	40,000	11.5	13.5	39,000	3.64	7.8	23,400	2.42
3701392	25HBC342A**50	CAP**4824A**	58PH*135−20	41,000	11.5	14.0	39,000	3.76	7.8	23,400	2.48
3701890	25HBC342A**50	CAP**4824A**	58UVB120−20	40,000	11.5	14.0	39,000	3.70	7.8	23,200	2.46
3701387	25HBC342A**50	CAP**4824A**+TDR		41,000	11.0	13.0	39,000	3.66	7.8	24,400	2.40
3701512	25HBC342A**50	CNPF*4818A**+TDR		41,000	11.0	13.0	39,000	3.60	7.8	24,400	2.38
3701444	25HBC342A**50	CNPH*4221A**	58CV(A,X)070−12	40,000	11.0	13.5	39,000	3.52	7.7	23,400	2.36
3701445	25HBC342A**50	CNPH*4221A**	58CV(A,X)090−16	40,000	11.5	13.5	39,000	3.58	7.7	23,200	2.40
3701446	25HBC342A**50	CNPH*4221A**	58CV(A,X)110−20	40,000	11.5	13.5	39,000	3.60	7.7	23,200	2.40
3701447	25HBC342A**50	CNPH*4221A**	58CV(A,X)135−22	40,000	11.5	14.0	39,000	3.62	7.7	23,000	2.42
3701448	25HBC342A**50	CNPH*4221A**	58CV(A,X)155−22	40,000	11.5	14.0	39,000	3.62	7.7	23,000	2.42
3701459	25HBC342A**50	CNPH*4221A**	58HDV060−−12	40,000	11.0	13.2	39,000	3.52	7.7	23,800	2.34
3701460	25HBC342A**50	CNPH*4221A**	58HDV080−−20	40,000	11.0	13.5	39,000	3.62	7.7	23,600	2.40
3701461	25HBC342A**50	CNPH*4221A**	58HDV100−−20	40,000	11.0	13.5	39,000	3.60	7.7	23,200	2.40
3701454	25HBC342A**50	CNPH*4221A**	58ME(B,C)060−12	40,000	11.0	13.5	39,000	3.60	7.7	23,400	2.40
3701455	25HBC342A**50	CNPH*4221A**	58ME(B,C)080−12	40,000	11.0	13.5	39,000	3.62	7.7	23,400	2.42
3701456	25HBC342A**50	CNPH*4221A**	58ME(B,C)080−16	40,000	11.0	13.5	39,000	3.58	7.7	23,200	2.40
3701457	25HBC342A**50	CNPH*4221A**	58ME(B,C)100−20	40,000	11.5	14.0	39,000	3.64	7.8	23,200	2.44
3701458	25HBC342A**50	CNPH*4221A**	58ME(B,C)120−20	40,000	11.5	14.0	39,000	3.66	7.8	23,000	2.44
3701453	25HBC342A**50	CNPH*4221A**	58MEB040−12	40,000	11.0	13.5	39,000	3.62	7.7	23,400	2.42
3701439	25HBC342A**50	CNPH*4221A**	58MV(B,C)060−14	40,000	11.0	13.5	39,000	3.60	7.7	23,400	2.40
3701440	25HBC342A**50	CNPH*4221A**	58MV(B,C)080−14	40,000	11.0	13.5	39,000	3.54	7.7	23,400	2.36
3701441	25HBC342A**50	CNPH*4221A**	58MV(B,C)080−20	40,000	11.0	13.5	39,000	3.56	7.7	23,400	2.38
3701442	25HBC342A**50	CNPH*4221A**	58MV(B,C)100−20	40,000	11.0	13.5	39,000	3.54	7.7	23,200	2.38
3701443	25HBC342A**50	CNPH*4221A**	58MV(B,C)120−20	40,000	11.5	13.5	39,000	3.58	7.7	23,200	2.40
3701438	25HBC342A**50	CNPH*4221A**	58MVB040−14	40,000	11.5	13.5	39,000	3.52	7.7	23,400	2.36
3701449	25HBC342A**50	CNPH*4221A**	58PH*070−16	40,000	11.0	13.2	39,000	3.52	7.7	23,800	2.36
3701450	25HBC342A**50	CNPH*4221A**	58PH*090−16	40,000	11.5	13.5	39,000	3.60	7.7	23,200	2.42
3701451	25HBC342A**50	CNPH*4221A**	58PH*110−20	40,000	11.5	13.5	39,000	3.62	7.7	23,000	2.42
3701452	25HBC342A**50	CNPH*4221A**	58PH*135−20	40,000	11.5	13.5	39,000	3.60	7.7	23,200	2.42
3701594	25HBC342A**50	CNPH*4221A**	58VLR120−20	40,000	11.5	13.5	39,000	3.58	7.7	23,000	2.40
3701593	25HBC342A**50	CNPH*4221A**	58VMR120−20	39,500	11.5	13.5	39,000	3.56	7.7	23,000	2.40
3701437	25HBC342A**50	CNPH*4221A**+TDR		40,000	11.0	13.0	39,000	3.56	7.7	24,200	2.36
3701469	25HBC342A**50	CNPH*4321A**	58CV(A,X)070−12	41,000	11.5	14.0	39,000	3.72	7.8	23,600	2.46
3701470	25HBC342A**50	CNPH*4321A**	58CV(A,X)090−16	41,000	11.5	14.0	39,000	3.78	7.8	23,400	2.50
3701471	25HBC342A**50	CNPH*4321A**	58CV(A,X)110−20	41,000	11.5	14.0	39,000	3.80	8.0	23,400	2.50
3701472	25HBC342A**50	CNPH*4321A**	58CV(A,X)135−22	41,000	12.0	14.5	39,000	3.84	8.2	23,200	2.52
3701473	25HBC342A**50	CNPH*4321A**	58CV(A,X)155−22	41,000	12.0	14.5	39,000	3.82	8.2	23,200	2.52
3701484	25HBC342A**50	CNPH*4321A**	58HDV060−−12	41,000	11.0	13.5	40,000	3.72	7.8	24,000	2.44
3701485	25HBC342A**50	CNPH*4321A**	58HDV080−−20	41,000	11.5	14.0	39,500	3.82	8.2	24,000	2.50
3701486	25HBC342A**50	CNPH*4321A**	58HDV100−−20	41,000	11.5	14.0	39,500	3.82	7.8	23,600	2.50
3701479	25HBC342A**50	CNPH*4321A**	58ME(B,C)060−12	41,000	11.5	14.0	39,500	3.82	8.0	23,800	2.50
3701480	25HBC342A**50	CNPH*4321A**	58ME(B,C)080−12	41,000	12.0	14.5	39,500	3.82	8.2	23,600	2.50
3701481	25HBC342A**50	CNPH*4321A**	58ME(B,C)080−16	41,000	11.5	14.0	39,500	3.80	8.0	23,600	2.50
3701482	25HBC342A**50	CNPH*4321A**	58ME(B,C)100−20	41,000	12.0	14.5	39,500	3.86	8.2	23,400	2.54
3701483	25HBC342A**50	CNPH*4321A**	58ME(B,C)120−20	41,000	12.0	14.5	39,500	3.88	8.2	23,400	2.54
3701478	25HBC342A**50	CNPH*4321A**	58MEB040−12	41,000	12.0	14.5	39,500	3.82	8.2	23,800	2.50
3701464	25HBC342A**50	CNPH*4321A**	58MV(B,C)060−14	41,000	11.5	14.0	39,000	3.80	8.0	23,600	2.50
3701465	25HBC342A**50	CNPH*4321A**	58MV(B,C)080−14	41,000	11.5	14.0	39,000	3.74	7.8	23,600	2.46
3701466	25HBC342A**50	CNPH*4321A**	58MV(B,C)080−20	41,000	11.5	14.0	39,000	3.76	7.8	23,600	2.48
3701467	25HBC342A**50	CNPH*4321A**	58MV(B,C)100−20	41,000	11.5	14.0	39,000	3.74	7.8	23,400	2.46
3701468	25HBC342A**50	CNPH*4321A**	58MV(B,C)120−20	41,000	11.5	14.0	39,000	3.78	7.8	23,400	2.50
3701463	25HBC342A**50	CNPH*4321A**	58MVB040−14	41,000	11.5	14.0	39,000	3.72	7.8	23,600	2.46
3701474	25HBC342A**50	CNPH*4321A**	58PH*070−16	41,000	11.0	13.5	39,500	3.72	7.8	24,000	2.44
3701475	25HBC342A**50	CNPH*4321A**	58PH*090−16	41,000	11.5	14.0	39,500	3.82	7.8	23,400	2.52
3701476	25HBC342A**50	CNPH*4321A**	58PH*110−20	41,000	12.0	14.5	39,500	3.84	8.2	23,400	2.54
3701477	25HBC342A**50	CNPH*4321A**	58PH*135−20	41,000	12.0	14.5	39,500	3.84	8.2	23,400	2.52
3701596	25HBC342A**50	CNPH*4321A**	58VLR120−20	41,000	11.5	14.0	39,000	3.80	7.8	23,400	2.50
3701595	25HBC342A**50	CNPH*4321A**	58VMR120−20	40,000	11.5	14.0	39,000	3.76	7.7	23,400	2.48

See notes on page 45

COMBINATION RATINGS CONTINUED

AHRI Ref. No.	Model Number	Coil Model Number	Furnace Model Number	Cooling Capacity	EER	SEER	High Temp		HSPF	Low Temp	
							E Capacity	E COP		H Capacity	H COP
3701462	25HBC342A**50	CNPH*4321A**+TDR		41,000	11.0	13.0	39,000	3.74	7.8	24,600	2.44
3701494	25HBC342A**50	CNPH*4821A**	58CV(A,X)070−12	40,000	11.5	13.5	39,000	3.64	7.8	23,400	2.42
3701495	25HBC342A**50	CNPH*4821A**	58CV(A,X)090−16	41,000	11.5	14.0	39,000	3.70	7.8	23,200	2.46
3701496	25HBC342A**50	CNPH*4821A**	58CV(A,X)110−20	41,000	11.5	14.0	39,000	3.72	7.8	23,200	2.48
3701497	25HBC342A**50	CNPH*4821A**	58CV(A,X)135−22	41,000	11.5	14.0	39,000	3.76	7.8	23,200	2.50
3701498	25HBC342A**50	CNPH*4821A**	58CV(A,X)155−22	41,000	11.5	14.0	39,000	3.74	7.8	23,000	2.50
3701509	25HBC342A**50	CNPH*4821A**	58HDV060−−12	41,000	11.5	13.5	39,000	3.64	7.8	24,000	2.40
3701510	25HBC342A**50	CNPH*4821A**	58HDV080−−20	41,000	11.5	14.0	39,000	3.76	7.8	23,800	2.48
3701511	25HBC342A**50	CNPH*4821A**	58HDV100−−20	41,000	11.5	14.0	39,000	3.74	7.8	23,400	2.48
3701504	25HBC342A**50	CNPH*4821A**	58ME(B,C)060−12	41,000	11.5	14.0	39,000	3.74	7.8	23,600	2.46
3701505	25HBC342A**50	CNPH*4821A**	58ME(B,C)080−12	41,000	11.5	14.0	39,000	3.74	7.8	23,600	2.48
3701506	25HBC342A**50	CNPH*4821A**	58ME(B,C)080−16	41,000	11.5	14.0	39,000	3.72	7.8	23,400	2.46
3701507	25HBC342A**50	CNPH*4821A**	58ME(B,C)100−20	41,000	11.5	14.0	39,000	3.78	7.8	23,400	2.50
3701508	25HBC342A**50	CNPH*4821A**	58ME(B,C)120−20	41,000	11.5	14.0	39,000	3.80	7.8	23,200	2.52
3701503	25HBC342A**50	CNPH*4821A**	58MEB040−12	41,000	11.5	14.0	39,000	3.74	7.8	23,600	2.48
3701489	25HBC342A**50	CNPH*4821A**	58MV(B,C)060−14	41,000	11.5	14.0	39,000	3.72	7.8	23,400	2.46
3701490	25HBC342A**50	CNPH*4821A**	58MV(B,C)080−14	40,000	11.5	13.5	39,000	3.66	7.8	23,400	2.44
3701491	25HBC342A**50	CNPH*4821A**	58MV(B,C)080−20	41,000	11.5	13.5	39,000	3.68	7.8	23,400	2.44
3701492	25HBC342A**50	CNPH*4821A**	58MV(B,C)100−20	40,000	11.5	14.0	39,000	3.66	7.8	23,200	2.44
3701493	25HBC342A**50	CNPH*4821A**	58MV(B,C)120−20	41,000	11.5	14.0	39,000	3.72	7.8	23,200	2.46
3701488	25HBC342A**50	CNPH*4821A**	58MVB040−14	40,000	11.5	13.5	39,000	3.64	7.8	23,400	2.42
3701499	25HBC342A**50	CNPH*4821A**	58PH*070−16	41,000	11.0	13.5	39,000	3.64	7.8	24,000	2.40
3701500	25HBC342A**50	CNPH*4821A**	58PH*090−16	41,000	11.5	14.0	39,000	3.74	7.8	23,400	2.48
3701501	25HBC342A**50	CNPH*4821A**	58PH*110−20	41,000	11.5	14.0	39,000	3.78	7.8	23,200	2.50
3701502	25HBC342A**50	CNPH*4821A**	58PH*135−20	41,000	11.5	14.0	39,000	3.76	7.8	23,400	2.48
3701598	25HBC342A**50	CNPH*4821A**	58VLR120−20	40,000	11.5	14.0	39,000	3.72	7.8	23,200	2.48
3701597	25HBC342A**50	CNPH*4821A**	58VMR120−20	40,000	11.5	14.0	39,000	3.70	7.8	23,200	2.46
3701487	25HBC342A**50	CNPH*4821A**+TDR		41,000	11.0	13.0	40,000	3.66	7.8	24,400	2.40
3701399	25HBC342A**50	CNPV*4217A**	58CV(A,X)090−16	40,000	11.5	13.5	39,000	3.64	7.8	23,200	2.42
3701402	25HBC342A**50	CNPV*4217A**	58ME(B,C)060−12	40,000	11.0	13.5	39,000	3.66	7.8	23,600	2.42
3701403	25HBC342A**50	CNPV*4217A**	58ME(B,C)080−12	40,000	11.5	13.5	39,000	3.66	7.8	23,400	2.44
3701404	25HBC342A**50	CNPV*4217A**	58ME(B,C)080−16	40,000	11.5	13.5	39,000	3.64	7.8	23,400	2.42
3701401	25HBC342A**50	CNPV*4217A**	58MEB040−12	40,000	11.5	13.5	39,000	3.66	7.8	23,600	2.44
3701398	25HBC342A**50	CNPV*4217A**	58MV(B,C)060−14	40,000	11.0	13.5	39,000	3.64	7.8	23,600	2.42
3701400	25HBC342A**50	CNPV*4217A**	58PH*070−16	40,000	11.0	13.2	39,000	3.56	7.7	23,800	2.38
3701891	25HBC342A**50	CNPV*4217A**	58UVB060−14	40,000	11.0	13.5	39,000	3.64	7.8	23,600	2.42
3701397	25HBC342A**50	CNPV*4217A**+TDR		40,000	11.0	13.0	40,000	3.60	7.8	24,400	2.38
3701409	25HBC342A**50	CNPV*4221A**	58CV(A,X)110−20	40,000	11.0	13.5	39,000	3.60	7.7	23,200	2.40
3701412	25HBC342A**50	CNPV*4221A**	58ME(B,C)100−20	40,000	11.5	14.0	39,000	3.64	7.7	23,200	2.44
3701406	25HBC342A**50	CNPV*4221A**	58MV(B,C)080−14	40,000	11.0	13.5	39,000	3.54	7.7	23,400	2.36
3701407	25HBC342A**50	CNPV*4221A**	58MV(B,C)080−20	40,000	11.0	13.5	39,000	3.56	7.7	23,400	2.38
3701408	25HBC342A**50	CNPV*4221A**	58MV(B,C)100−20	40,000	11.0	13.5	39,000	3.54	7.7	23,200	2.38
3701410	25HBC342A**50	CNPV*4221A**	58PH*090−16	40,000	11.5	13.5	39,000	3.60	7.7	23,200	2.42
3701411	25HBC342A**50	CNPV*4221A**	58PH*110−20	40,000	11.5	14.0	39,000	3.62	7.7	23,000	2.42
3701892	25HBC342A**50	CNPV*4221A**	58UVB080−14	40,000	11.0	13.5	39,000	3.54	7.7	23,400	2.36
3701893	25HBC342A**50	CNPV*4221A**	58UVB080−20	40,000	11.0	13.5	39,000	3.56	7.7	23,400	2.38
3701894	25HBC342A**50	CNPV*4221A**	58UVB100−20	40,000	11.0	13.5	39,000	3.54	7.7	23,200	2.38
3701590	25HBC342A**50	CNPV*4221A**	58VLR120−20	40,000	11.5	13.5	39,000	3.58	7.7	23,000	2.40
3701589	25HBC342A**50	CNPV*4221A**	58VMR120−20	39,500	11.5	13.5	39,000	3.56	7.7	23,000	2.40
3701405	25HBC342A**50	CNPV*4221A**+TDR		40,000	11.0	13.0	40,000	3.56	7.7	24,200	2.36
3701416	25HBC342A**50	CNPV*4324A**	58CV(A,X)135−22	41,000	12.0	14.5	39,000	3.84	8.2	23,200	2.54
3701417	25HBC342A**50	CNPV*4324A**	58CV(A,X)155−22	41,000	12.0	14.5	39,000	3.84	8.2	23,200	2.54
3701420	25HBC342A**50	CNPV*4324A**	58HDV100−−20 (DWNFLWONLY)	41,000	12.0	14.5	39,500	3.84	8.2	23,600	2.52
3701419	25HBC342A**50	CNPV*4324A**	58ME(B,C)120−20	41,000	12.0	14.5	39,500	3.90	8.2	23,400	2.56
3701415	25HBC342A**50	CNPV*4324A**	58MV(B,C)120−20	41,000	11.5	14.0	39,000	3.80	7.8	23,400	2.50
3701414	25HBC342A**50	CNPV*4324A**	58MVB040−14	41,000	11.5	14.0	39,500	3.74	7.8	23,400	2.46
3701418	25HBC342A**50	CNPV*4324A**	58PH*135−20	41,000	12.0	14.5	39,500	3.86	8.2	23,400	2.54
3701895	25HBC342A**50	CNPV*4324A**	58UVB120−20	41,000	11.5	14.0	39,000	3.80	7.8	23,400	2.50
3701413	25HBC342A**50	CNPV*4324A**+TDR		41,000	11.0	13.0	40,000	3.74	7.8	24,600	2.44
3701425	25HBC342A**50	CNPV*4821A**	58CV(A,X)110−20	41,000	11.5	14.0	39,000	3.72	7.8	23,200	2.48
3701428	25HBC342A**50	CNPV*4821A**	58ME(B,C)100−20	41,000	11.5	14.0	39,000	3.78	7.8	23,400	2.50
3701422	25HBC342A**50	CNPV*4821A**	58MV(B,C)080−14	40,000	11.5	13.5	39,000	3.66	7.8	23,400	2.44
3701423	25HBC342A**50	CNPV*4821A**	58MV(B,C)080−20	41,000	11.5	13.5	39,000	3.68	7.8	23,400	2.44
3701424	25HBC342A**50	CNPV*4821A**	58MV(B,C)100−20	40,000	11.5	14.0	39,000	3.66	7.8	23,200	2.44
3701426	25HBC342A**50	CNPV*4821A**	58PH*090−16	41,000	11.5	14.0	39,000	3.74	7.8	23,400	2.48
3701427	25HBC342A**50	CNPV*4821A**	58PH*110−20	41,000	11.5	14.0	39,000	3.78	7.8	23,200	2.50
3701896	25HBC342A**50	CNPV*4821A**	58UVB080−14	40,000	11.5	13.5	39,000	3.66	7.8	23,400	2.44
3701897	25HBC342A**50	CNPV*4821A**	58UVB080−20	41,000	11.5	13.5	39,000	3.68	7.8	23,400	2.44
3701898	25HBC342A**50	CNPV*4821A**	58UVB100−20	40,000	11.5	14.0	39,000	3.66	7.8	23,200	2.44
3701592	25HBC342A**50	CNPV*4821A**	58VLR120−20	40,000	11.5	14.0	39,000	3.72	7.8	23,200	2.48
3701591	25HBC342A**50	CNPV*4821A**	58VMR120−20	40,000	11.5	14.0	39,000	3.70	7.8	23,200	2.46
3701421	25HBC342A**50	CNPV*4821A**+TDR		41,000	11.0	13.0	40,000	3.66	7.8	24,400	2.40
3701432	25HBC342A**50	CNPV*4824A**	58CV(A,X)135−22	41,000	11.5	14.0	39,000	3.76	7.8	23,200	2.50
3701433	25HBC342A**50	CNPV*4824A**	58CV(A,X)155−22	41,000	11.5	14.0	39,000	3.74	7.8	23,000	2.50
3701436	25HBC342A**50	CNPV*4824A**	58HDV100−−20 (DWNFLWONLY)	41,000	11.5	14.0	39,000	3.74	7.8	23,400	2.48
3701435	25HBC342A**50	CNPV*4824A**	58ME(B,C)120−20	41,000	11.5	14.0	39,000	3.80	8.0	23,200	2.52
3701431	25HBC342A**50	CNPV*4824A**	58MV(B,C)120−20	41,000	11.5	14.0	39,000	3.72	7.8	23,200	2.46
3701430	25HBC342A**50	CNPV*4824A**	58MVB040−14	40,000	11.5	13.5	39,000	3.64	7.8	23,400	2.42
3701434	25HBC342A**50	CNPV*4824A**	58PH*135−20	41,000	11.5	14.0	39,000	3.76	7.8	23,400	2.48
3701899	25HBC342A**50	CNPV*4824A**	58UVB120−20	41,000	11.5	14.0	39,000	3.72	7.8	23,200	2.46
3701429	25HBC342A**50	CNPV*4824A**+TDR		41,000	11.0	13.0	40,000	3.66	7.8	24,400	2.40
3701520	25HBC342A**50	CSPH*4212A**	58CV(A,X)070−12	40,000	11.0	13.5	39,000	3.64	7.8	23,600	2.42
3701521	25HBC342A**50	CSPH*4212A**	58CV(A,X)090−16	40,000	11.5	14.0	39,000	3.70	7.8	23,200	2.46
3701522	25HBC342A**50	CSPH*4212A**	58CV(A,X)110−20	40,000	11.5	14.0	39,000	3.72	7.8	23,400	2.46
3701523	25HBC342A**50	CSPH*4212A**	58CV(A,X)135−22	40,000	11.5	14.0	39,000	3.74	7.8	23,200	2.48

See notes on page 45

COMBINATION RATINGS CONTINUED

AHRI Ref. No.	Model Number	Coil Model Number	Furnace Model Number	Cooling Capacity	EER	SEER	High Temp		HSPF	Low Temp	
							E Capacity	E COP		H Capacity	H COP
3701524	25HBC342A**50	CSPH*4212A**	58CV(A,X)155–22	40,000	11.5	14.0	39,000	3.74	7.8	23,200	2.48
3701535	25HBC342A**50	CSPH*4212A**	58HDV060––12	40,000	11.0	13.5	39,000	3.64	7.8	24,000	2.40
3701536	25HBC342A**50	CSPH*4212A**	58HDV080––20	40,000	11.5	13.5	39,000	3.74	7.8	23,800	2.46
3701537	25HBC342A**50	CSPH*4212A**	58HDV100––20	40,000	11.5	14.0	39,000	3.72	7.8	23,400	2.46
3701530	25HBC342A**50	CSPH*4212A**	58ME(B,C)060–12	40,000	11.5	14.0	39,000	3.72	7.8	23,600	2.46
3701531	25HBC342A**50	CSPH*4212A**	58ME(B,C)080–12	40,000	11.5	14.0	39,000	3.74	7.8	23,600	2.46
3701532	25HBC342A**50	CSPH*4212A**	58ME(B,C)080–16	40,000	11.5	14.0	39,000	3.72	7.8	23,400	2.46
3701533	25HBC342A**50	CSPH*4212A**	58ME(B,C)100–20	40,000	11.5	14.0	39,000	3.76	7.8	23,400	2.48
3701534	25HBC342A**50	CSPH*4212A**	58ME(B,C)120–20	40,000	11.5	14.0	39,000	3.78	7.8	23,200	2.50
3701529	25HBC342A**50	CSPH*4212A**	58MEB040–12	40,000	11.5	14.0	39,000	3.74	7.8	23,600	2.46
3701515	25HBC342A**50	CSPH*4212A**	58MV(B,C)060–14	40,000	11.5	14.0	39,000	3.72	7.8	23,600	2.46
3701516	25HBC342A**50	CSPH*4212A**	58MV(B,C)080–14	40,000	11.0	13.5	39,000	3.64	7.8	23,600	2.42
3701517	25HBC342A**50	CSPH*4212A**	58MV(B,C)080–20	40,000	11.5	13.5	39,000	3.68	7.8	23,600	2.44
3701518	25HBC342A**50	CSPH*4212A**	58MV(B,C)100–20	40,000	11.5	13.5	39,000	3.66	7.8	23,400	2.42
3701519	25HBC342A**50	CSPH*4212A**	58MV(B,C)120–20	40,000	11.5	14.0	39,000	3.70	7.8	23,200	2.46
3701514	25HBC342A**50	CSPH*4212A**	58MVB040–14	40,000	11.5	13.5	39,000	3.64	7.8	23,400	2.42
3701525	25HBC342A**50	CSPH*4212A**	58PH*070–16	40,000	11.0	13.5	39,000	3.64	7.8	24,000	2.40
3701526	25HBC342A**50	CSPH*4212A**	58PH*090–16	40,000	11.5	14.0	39,000	3.74	7.8	23,400	2.48
3701527	25HBC342A**50	CSPH*4212A**	58PH*110–20	40,000	11.5	14.0	39,000	3.76	7.8	23,200	2.48
3701528	25HBC342A**50	CSPH*4212A**	58PH*135–20	40,000	11.5	14.0	39,000	3.74	7.8	23,400	2.48
3701600	25HBC342A**50	CSPH*4212A**	58VLR120–20	40,000	11.5	14.0	39,000	3.70	7.8	23,200	2.46
3701599	25HBC342A**50	CSPH*4212A**	58VMR120–20	40,000	11.5	14.0	39,000	3.68	7.8	23,200	2.46
3701513	25HBC342A**50	CSPH*4212A**+TDR		40,000	11.0	13.0	39,000	3.66	7.8	24,400	2.40
3701545	25HBC342A**50	CSPH*4812A**	58CV(A,X)070–12	41,000	11.5	13.5	39,000	3.66	7.8	23,600	2.42
3701546	25HBC342A**50	CSPH*4812A**	58CV(A,X)090–16	41,000	11.5	14.0	39,000	3.72	7.8	23,400	2.48
3701547	25HBC342A**50	CSPH*4812A**	58CV(A,X)110–20	41,000	11.5	14.0	39,000	3.74	7.8	23,400	2.48
3701548	25HBC342A**50	CSPH*4812A**	58CV(A,X)135–22	41,000	11.5	14.0	39,000	3.76	7.8	23,200	2.50
3701549	25HBC342A**50	CSPH*4812A**	58CV(A,X)155–22	41,000	11.5	14.0	39,000	3.76	7.8	23,200	2.50
3701560	25HBC342A**50	CSPH*4812A**	58HDV060––12	41,000	11.0	13.5	40,000	3.66	7.8	24,000	2.42
3701561	25HBC342A**50	CSPH*4812A**	58HDV080––20	41,000	11.5	14.0	40,000	3.76	7.8	23,800	2.48
3701562	25HBC342A**50	CSPH*4812A**	58HDV100––20	41,000	11.5	14.0	39,000	3.76	7.8	23,600	2.48
3701555	25HBC342A**50	CSPH*4812A**	58ME(B,C)060–12	41,000	11.5	14.0	39,000	3.76	7.8	23,600	2.48
3701556	25HBC342A**50	CSPH*4812A**	58ME(B,C)080–12	41,000	11.5	14.0	39,000	3.76	7.8	23,600	2.48
3701557	25HBC342A**50	CSPH*4812A**	58ME(B,C)080–16	41,000	11.5	14.0	39,000	3.74	7.8	23,400	2.48
3701558	25HBC342A**50	CSPH*4812A**	58ME(B,C)100–20	41,000	11.5	14.0	39,000	3.78	7.8	23,400	2.50
3701559	25HBC342A**50	CSPH*4812A**	58ME(B,C)120–20	41,000	11.5	14.0	39,000	3.82	7.8	23,400	2.52
3701554	25HBC342A**50	CSPH*4812A**	58MEB040–12	41,000	11.5	14.0	39,000	3.76	7.8	23,600	2.48
3701540	25HBC342A**50	CSPH*4812A**	58MV(B,C)060–14	41,000	11.5	14.0	39,500	3.74	7.8	23,600	2.46
3701541	25HBC342A**50	CSPH*4812A**	58MV(B,C)080–14	41,000	11.5	13.5	39,500	3.68	7.8	23,600	2.44
3701542	25HBC342A**50	CSPH*4812A**	58MV(B,C)080–20	41,000	11.5	13.5	39,500	3.70	7.8	23,600	2.44
3701543	25HBC342A**50	CSPH*4812A**	58MV(B,C)100–20	41,000	11.5	14.0	39,000	3.68	7.8	23,400	2.44
3701544	25HBC342A**50	CSPH*4812A**	58MV(B,C)120–20	41,000	11.5	14.0	39,000	3.72	7.8	23,400	2.48
3701539	25HBC342A**50	CSPH*4812A**	58MVB040–14	41,000	11.5	13.5	39,000	3.66	7.8	23,600	2.42
3701550	25HBC342A**50	CSPH*4812A**	58PH*070–16	41,000	11.5	13.5	40,000	3.66	7.8	24,000	2.42
3701551	25HBC342A**50	CSPH*4812A**	58PH*090–16	41,000	11.5	14.0	39,000	3.76	7.8	23,400	2.48
3701552	25HBC342A**50	CSPH*4812A**	58PH*110–20	41,000	11.5	14.0	39,000	3.78	7.8	23,400	2.50
3701553	25HBC342A**50	CSPH*4812A**	58PH*135–20	41,000	11.5	14.0	39,000	3.76	7.8	23,400	2.48
3701602	25HBC342A**50	CSPH*4812A**	58VLR120–20	40,000	11.5	14.0	39,000	3.74	7.8	23,200	2.48
3701601	25HBC342A**50	CSPH*4812A**	58VMR120–20	40,000	11.5	14.0	39,000	3.70	7.8	23,200	2.46
3701538	25HBC342A**50	CSPH*4812A**+TDR		41,000	11.0	13.0	40,500	3.68	7.8	24,400	2.42
3699503	25HBC348(A,W)**30	†FY5BNF048		47,000	11.0	13.0	47,500	3.74	7.8	30,000	2.62
3699504	25HBC348(A,W)**30	FB4CNF048		46,000	11.0	13.0	46,000	3.66	7.8	29,800	2.58
3699329	25HBC348(A,W)**30	FB4CNF048+TXV		46,000	11.0	13.5	46,000	3.68	7.8	29,800	2.58
3699505	25HBC348(A,W)**30	FB4CNF060		47,000	11.0	13.2	47,000	3.78	7.8	29,800	2.64
3699330	25HBC348(A,W)**30	FB4CNF060+TXV		47,000	11.5	14.0	47,000	3.78	7.8	29,800	2.64
3699320	25HBC348(A,W)**30	FE4AN(B,F)005+UI		47,000	12.5	14.0	46,000	3.76	7.8	29,000	2.66
3699321	25HBC348(A,W)**30	FE4ANB006+UI		47,000	12.5	14.5	46,000	3.88	8.0	29,000	2.72
3699322	25HBC348(A,W)**30	FV4BN(B,F)005		47,000	12.5	14.0	46,000	3.76	7.8	29,000	2.66
3699323	25HBC348(A,W)**30	FV4BNB006		47,000	12.5	14.5	46,000	3.88	8.0	29,000	2.72
3699324	25HBC348(A,W)**30	FV4CN(B,F)005		47,000	12.5	14.0	46,000	3.76	7.8	29,000	2.66
3699325	25HBC348(A,W)**30	FV4CNB006		47,000	12.5	14.5	46,000	3.88	8.0	29,000	2.72
3699328	25HBC348(A,W)**30	FX4CN(B,F)060		47,000	11.5	14.0	47,500	3.90	8.0	29,800	2.70
3699318	25HBC348(A,W)**30	FX4DN(B,F)049		47,000	11.5	14.0	46,000	3.82	8.0	29,600	2.68
3699319	25HBC348(A,W)**30	FX4DN(B,F)061		47,000	12.5	14.5	47,500	3.94	8.2	29,600	2.72
3699327	25HBC348(A,W)**30	FY4ANB060		47,000	11.0	13.0	48,000	3.72	7.8	30,600	2.56
3699326	25HBC348(A,W)**30	FY4ANF048		47,000	11.0	13.0	47,500	3.62	7.7	30,600	2.54
3699317	25HBC348(A,W)**30	FY5BNB060		47,000	11.0	13.2	47,500	3.72	7.8	30,600	2.56
3699331	25HBC348(A,W)**30	FY5BNF048+TXV		47,000	11.0	13.5	47,500	3.74	7.8	30,000	2.62
3699168	25HBC348(A,W)**30	CAP**4817A**	58CV(A,X)090–16	46,000	11.5	13.5	46,000	3.68	7.7	29,400	2.58
3699169	25HBC348(A,W)**30	CAP**4817A**	58ME(B,C)080–16	46,000	11.5	13.5	46,000	3.70	7.7	29,800	2.58
3699167	25HBC348(A,W)**30	CAP**4817A**+TDR		46,000	11.0	13.0	47,500	3.64	7.7	29,800	2.56
3699172	25HBC348(A,W)**30	CAP**4821A**	58CV(A,X)110–20	46,000	11.5	13.5	46,000	3.66	7.7	29,200	2.58
3699175	25HBC348(A,W)**30	CAP**4821A**	58ME(B,C)100–20	46,000	11.5	13.5	46,000	3.70	7.7	29,200	2.60
3699171	25HBC348(A,W)**30	CAP**4821A**	58MV(B,C)100–20	46,000	11.5	13.5	46,000	3.62	7.7	29,600	2.56
3699173	25HBC348(A,W)**30	CAP**4821A**	58PH*090–16	46,000	11.5	13.5	46,000	3.68	7.7	29,400	2.58
3699174	25HBC348(A,W)**30	CAP**4821A**	58PH*110–20	46,000	11.5	13.5	46,000	3.70	7.7	29,000	2.60
3699469	25HBC348(A,W)**30	CAP**4821A**	58UVB100–20	46,000	11.5	13.5	46,000	3.62	7.7	29,600	2.56
3699333	25HBC348(A,W)**30	CAP**4821A**	58VLR120–20	46,000	11.5	13.5	46,000	3.66	7.7	29,200	2.58
3699332	25HBC348(A,W)**30	CAP**4821A**	58VMR120–20	46,000	11.5	13.2	46,000	3.64	7.8	29,400	2.56
3699170	25HBC348(A,W)**30	CAP**4821A**+TDR		46,000	11.0	13.0	47,500	3.66	7.7	30,200	2.56
3699198	25HBC348(A,W)**30	CAP**4823A**	58HDV080––20	46,000	11.5	13.2	46,000	3.66	7.7	29,800	2.56
3699197	25HBC348(A,W)**30	CAP**4823A**+TDR		46,000	11.0	13.0	47,500	3.66	7.7	30,200	2.56
3699178	25HBC348(A,W)**30	CAP**4824A**	58CV(A,X)135–22	46,000	11.5	13.5	46,000	3.70	7.7	29,000	2.60
3699179	25HBC348(A,W)**30	CAP**4824A**	58CV(A,X)155–22	46,000	11.5	14.0	46,000	3.72	7.8	29,000	2.62
3699182	25HBC348(A,W)**30	CAP**4824A**	58HDV100––20	46,000	11.5	13.5	46,000	3.68	7.7	29,400	2.58
3699181	25HBC348(A,W)**30	CAP**4824A**	58ME(B,C)120–20	46,000	11.5	13.5	46,000	3.74	7.8	29,200	2.62

See notes on page 45

COMBINATION RATINGS CONTINUED

AHRI Ref. No.	Model Number	Coil Model Number	Furnace Model Number	Cooling Capacity	EER	SEER	High Temp		HSPF	Low Temp	
							E Capacity	E COP		H Capacity	H COP
3699177	25HBC348(A,W)**30	CAP**4824A**	58MV(B,C)120−20	46,000	11.5	13.5	46,000	3.66	7.7	29,200	2.58
3699180	25HBC348(A,W)**30	CAP**4824A**	58PH*135−20	46,000	11.5	13.5	46,000	3.70	7.7	29,200	2.60
3699470	25HBC348(A,W)**30	CAP**4824A**	58UVB120−20	46,000	11.5	13.5	46,000	3.66	7.7	29,200	2.58
3699176	25HBC348(A,W)**30	CAP**4824A**+TDR		46,000	11.0	13.0	47,500	3.66	7.7	30,200	2.56
3699186	25HBC348(A,W)**30	CAP**6021A**	58CV(A,X)110−20	47,000	11.5	13.5	46,000	3.72	7.8	29,200	2.62
3699189	25HBC348(A,W)**30	CAP**6021A**	58ME(B,C)100−20	47,000	11.5	14.0	46,000	3.76	7.8	29,400	2.64
3699184	25HBC348(A,W)**30	CAP**6021A**	58MV(B,C)080−20	46,000	11.5	13.5	46,000	3.64	7.7	29,400	2.58
3699185	25HBC348(A,W)**30	CAP**6021A**	58MV(B,C)100−20	47,000	11.5	13.5	46,000	3.68	7.7	29,600	2.60
3699187	25HBC348(A,W)**30	CAP**6021A**	58PH*090−16	47,000	11.5	14.0	46,000	3.74	7.8	29,400	2.62
3699188	25HBC348(A,W)**30	CAP**6021A**	58PH*110−20	47,000	11.5	14.0	46,000	3.76	7.8	29,200	2.66
3699471	25HBC348(A,W)**30	CAP**6021A**	58UVB080−20	46,000	11.5	13.5	46,000	3.64	7.7	29,400	2.58
3699472	25HBC348(A,W)**30	CAP**6021A**	58UVB100−20	47,000	11.5	13.5	46,000	3.68	7.7	29,600	2.60
3699335	25HBC348(A,W)**30	CAP**6021A**	58VLR120−20	46,000	11.5	14.0	46,000	3.72	7.7	29,200	2.62
3699334	25HBC348(A,W)**30	CAP**6021A**	58VMR120−20	46,000	11.5	13.5	46,000	3.68	7.7	29,400	2.60
3699183	25HBC348(A,W)**30	CAP**6021A**+TDR		47,000	11.0	13.0	47,500	3.72	7.8	30,400	2.58
3699192	25HBC348(A,W)**30	CAP**6024A**	58CV(A,X)135−22	47,000	11.5	14.0	46,000	3.74	7.8	29,200	2.64
3699193	25HBC348(A,W)**30	CAP**6024A**	58CV(A,X)155−22	47,000	11.5	14.0	46,000	3.78	7.8	29,000	2.66
3699196	25HBC348(A,W)**30	CAP**6024A**	58HDV100−−20	47,000	11.5	13.5	46,000	3.72	7.8	29,600	2.62
3699195	25HBC348(A,W)**30	CAP**6024A**	58ME(B,C)120−20	47,000	11.5	14.0	46,000	3.80	7.8	29,200	2.66
3699191	25HBC348(A,W)**30	CAP**6024A**	58MV(B,C)120−20	47,000	11.5	13.5	46,000	3.70	7.8	29,400	2.62
3699194	25HBC348(A,W)**30	CAP**6024A**	58PH*135−20	47,000	11.5	14.0	46,000	3.76	7.8	29,400	2.64
3699473	25HBC348(A,W)**30	CAP**6024A**	58UVB120−20	47,000	11.5	13.5	46,000	3.70	7.8	29,400	2.62
3699190	25HBC348(A,W)**30	CAP**6024A**+TDR		47,000	11.0	13.0	47,500	3.72	7.8	30,400	2.58
3699201	25HBC348(A,W)**30	CAP**6025A**	58CV(A,X)135−22	47,000	11.5	14.0	46,000	3.74	7.8	29,200	2.64
3699202	25HBC348(A,W)**30	CAP**6025A**	58CV(A,X)155−22	47,000	11.5	14.0	46,000	3.78	7.8	29,000	2.66
3699205	25HBC348(A,W)**30	CAP**6025A**	58HDV100−−20	47,000	11.5	13.5	46,000	3.72	7.8	29,600	2.62
3699204	25HBC348(A,W)**30	CAP**6025A**	58ME(B,C)120−20	47,000	11.5	14.0	46,000	3.80	7.8	29,200	2.66
3699200	25HBC348(A,W)**30	CAP**6025A**	58MV(B,C)120−20	47,000	11.5	13.5	46,000	3.70	7.8	29,400	2.62
3699203	25HBC348(A,W)**30	CAP**6025A**	58PH*135−20	47,000	11.5	14.0	46,000	3.76	7.8	29,400	2.64
3699474	25HBC348(A,W)**30	CAP**6025A**	58UVB120−20	47,000	11.5	13.5	46,000	3.70	7.8	29,400	2.62
3699199	25HBC348(A,W)**30	CAP**6025A**+TDR		47,000	11.0	13.0	47,500	3.72	7.8	30,400	2.58
3699238	25HBC348(A,W)**30	CNPH*4821A**	58CV(A,X)090−16	46,000	11.5	13.5	46,000	3.66	7.7	29,200	2.58
3699239	25HBC348(A,W)**30	CNPH*4821A**	58CV(A,X)110−20	46,000	11.5	13.5	46,000	3.68	7.7	29,200	2.60
3699240	25HBC348(A,W)**30	CNPH*4821A**	58CV(A,X)135−22	46,000	11.5	13.5	46,000	3.70	7.7	29,000	2.62
3699241	25HBC348(A,W)**30	CNPH*4821A**	58CV(A,X)155−22	46,000	11.5	14.0	46,000	3.74	7.8	29,000	2.62
3699248	25HBC348(A,W)**30	CNPH*4821A**	58HDV080−−20	46,000	11.5	13.5	46,000	3.68	7.7	29,800	2.58
3699249	25HBC348(A,W)**30	CNPH*4821A**	58HDV100−−20	46,000	11.5	13.5	46,000	3.68	7.7	29,400	2.58
3699245	25HBC348(A,W)**30	CNPH*4821A**	58ME(B,C)080−16	46,000	11.5	13.5	46,000	3.68	7.8	29,600	2.58
3699246	25HBC348(A,W)**30	CNPH*4821A**	58ME(B,C)100−20	46,000	11.5	13.5	46,000	3.72	7.8	29,200	2.62
3699247	25HBC348(A,W)**30	CNPH*4821A**	58ME(B,C)120−20	46,000	11.5	14.0	46,000	3.74	7.8	29,200	2.62
3699235	25HBC348(A,W)**30	CNPH*4821A**	58MV(B,C)080−20	46,000	11.5	13.5	46,000	3.62	7.7	29,200	2.56
3699236	25HBC348(A,W)**30	CNPH*4821A**	58MV(B,C)100−20	46,000	11.5	13.5	46,000	3.64	7.7	29,400	2.56
3699237	25HBC348(A,W)**30	CNPH*4821A**	58MV(B,C)120−20	46,000	11.5	13.5	46,000	3.66	7.7	29,200	2.58
3699242	25HBC348(A,W)**30	CNPH*4821A**	58PH*090−16	46,000	11.5	13.5	46,000	3.70	7.7	29,400	2.60
3699243	25HBC348(A,W)**30	CNPH*4821A**	58PH*110−20	46,000	11.5	14.0	46,000	3.72	7.8	29,000	2.62
3699244	25HBC348(A,W)**30	CNPH*4821A**	58PH*135−20	46,000	11.5	13.5	46,000	3.70	7.7	29,200	2.60
3699339	25HBC348(A,W)**30	CNPH*4821A**	58VLR120−20	46,000	11.5	13.5	46,000	3.68	7.7	29,000	2.60
3699338	25HBC348(A,W)**30	CNPH*4821A**	58VMR120−20	46,000	11.5	13.5	46,000	3.66	7.7	29,200	2.58
3699234	25HBC348(A,W)**30	CNPH*4821A**+TDR		46,000	11.0	13.0	47,500	3.66	7.7	30,200	2.56
3699254	25HBC348(A,W)**30	CNPH*6024A**	58CV(A,X)090−16	47,000	11.5	13.5	46,000	3.70	7.7	29,200	2.62
3699255	25HBC348(A,W)**30	CNPH*6024A**	58CV(A,X)110−20	47,000	11.5	14.0	46,000	3.72	7.8	29,200	2.62
3699256	25HBC348(A,W)**30	CNPH*6024A**	58CV(A,X)135−22	47,000	11.5	14.0	46,000	3.74	7.8	29,000	2.64
3699257	25HBC348(A,W)**30	CNPH*6024A**	58CV(A,X)155−22	47,000	11.5	14.0	46,000	3.78	7.8	29,000	2.66
3699265	25HBC348(A,W)**30	CNPH*6024A**	58HDV080−−20	47,000	11.5	13.5	46,000	3.72	7.8	30,000	2.60
3699266	25HBC348(A,W)**30	CNPH*6024A**	58HDV100−−20	47,000	11.5	13.5	46,000	3.72	7.8	29,600	2.62
3699262	25HBC348(A,W)**30	CNPH*6024A**	58ME(B,C)080−16	47,000	11.5	13.5	46,000	3.72	7.8	29,800	2.60
3699263	25HBC348(A,W)**30	CNPH*6024A**	58ME(B,C)100−20	47,000	11.5	14.0	46,000	3.78	7.8	29,400	2.66
3699264	25HBC348(A,W)**30	CNPH*6024A**	58ME(B,C)120−20	47,000	11.5	14.0	46,000	3.80	7.8	29,200	2.66
3699251	25HBC348(A,W)**30	CNPH*6024A**	58MV(B,C)080−20	46,000	11.5	13.5	46,000	3.66	7.7	29,200	2.60
3699252	25HBC348(A,W)**30	CNPH*6024A**	58MV(B,C)100−20	47,000	11.5	13.5	46,000	3.68	7.7	29,600	2.60
3699253	25HBC348(A,W)**30	CNPH*6024A**	58MV(B,C)120−20	47,000	11.5	13.5	46,000	3.70	7.8	29,200	2.62
3699258	25HBC348(A,W)**30	CNPH*6024A**	58PH*070−16	47,000	11.0	13.0	46,000	3.60	7.7	30,400	2.52
3699259	25HBC348(A,W)**30	CNPH*6024A**	58PH*090−16	47,000	11.5	13.5	46,000	3.74	7.8	29,400	2.64
3699260	25HBC348(A,W)**30	CNPH*6024A**	58PH*110−20	47,000	11.5	14.0	46,000	3.78	7.8	29,200	2.66
3699261	25HBC348(A,W)**30	CNPH*6024A**	58PH*135−20	47,000	11.5	14.0	46,000	3.76	7.8	29,400	2.64
3699341	25HBC348(A,W)**30	CNPH*6024A**	58VLR120−20	46,000	11.5	14.0	46,000	3.72	7.8	29,200	2.64
3699340	25HBC348(A,W)**30	CNPH*6024A**	58VMR120−20	46,000	11.5	13.5	46,000	3.70	7.7	29,400	2.62
3699250	25HBC348(A,W)**30	CNPH*6024A**+TDR		47,000	11.0	13.0	47,500	3.70	7.8	30,400	2.58
3699271	25HBC348(A,W)**30	CNPH*6124A**	58CV(A,X)090−16	47,000	11.5	13.5	46,000	3.74	7.8	29,400	2.62
3699272	25HBC348(A,W)**30	CNPH*6124A**	58CV(A,X)110−20	47,000	11.5	14.0	46,000	3.76	7.8	29,400	2.64
3699273	25HBC348(A,W)**30	CNPH*6124A**	58CV(A,X)135−22	47,000	11.5	14.0	46,000	3.78	7.8	29,200	2.66
3699274	25HBC348(A,W)**30	CNPH*6124A**	58CV(A,X)155−22	47,000	11.5	14.0	46,000	3.82	7.8	29,200	2.68
3699282	25HBC348(A,W)**30	CNPH*6124A**	58HDV080−−20	47,000	11.5	13.5	46,000	3.76	7.8	30,000	2.62
3699283	25HBC348(A,W)**30	CNPH*6124A**	58HDV100−−20	47,000	11.5	13.5	46,000	3.76	7.8	29,600	2.62
3699279	25HBC348(A,W)**30	CNPH*6124A**	58ME(B,C)080−16	47,000	11.5	13.5	46,000	3.76	7.8	29,800	2.62
3699280	25HBC348(A,W)**30	CNPH*6124A**	58ME(B,C)100−20	47,000	11.5	14.0	46,000	3.80	7.8	29,400	2.66
3699281	25HBC348(A,W)**30	CNPH*6124A**	58ME(B,C)120−20	47,000	11.5	14.0	46,000	3.84	7.8	29,400	2.68
3699268	25HBC348(A,W)**30	CNPH*6124A**	58MV(B,C)080−20	46,000	11.5	13.5	46,000	3.68	7.7	29,400	2.60
3699269	25HBC348(A,W)**30	CNPH*6124A**	58MV(B,C)100−20	47,000	11.5	13.5	46,000	3.72	7.8	29,600	2.60
3699270	25HBC348(A,W)**30	CNPH*6124A**	58MV(B,C)120−20	47,000	11.5	13.5	46,000	3.74	7.8	29,400	2.62
3699275	25HBC348(A,W)**30	CNPH*6124A**	58PH*070−16	47,000	11.0	13.0	46,000	3.64	7.7	30,400	2.54
3699276	25HBC348(A,W)**30	CNPH*6124A**	58PH*090−16	47,000	11.5	14.0	46,000	3.78	7.8	29,600	2.64
3699277	25HBC348(A,W)**30	CNPH*6124A**	58PH*110−20	47,000	11.5	14.0	46,000	3.80	7.8	29,200	2.66
3699278	25HBC348(A,W)**30	CNPH*6124A**	58PH*135−20	47,000	11.5	14.0	46,000	3.78	7.8	29,400	2.64
3699343	25HBC348(A,W)**30	CNPH*6124A**	58VLR120−20	47,000	11.5	14.0	46,000	3.76	7.8	29,200	2.64
3699342	25HBC348(A,W)**30	CNPH*6124A**	58VMR120−20	47,000	11.5	13.5	46,000	3.72	7.8	29,400	2.62
3699267	25HBC348(A,W)**30	CNPH*6124A**+TDR		47,000	11.0	13.0	47,500	3.76	7.8	30,400	2.60

See notes on page 45

COMBINATION RATINGS CONTINUED

AHRI Ref. No.	Model Number	Coil Model Number	Furnace Model Number	Cooling Capacity	EER	SEER	High Temp		HSPF	Low Temp	
							E Capacity	E COP		H Capacity	H COP
3699209	25HBC348(A,W)**30	CNPV*4821A**	58CV(A,X)110−20	46,000	11.5	13.5	46,000	3.68	7.7	29,200	2.60
3699212	25HBC348(A,W)**30	CNPV*4821A**	58ME(B,C)100−20	46,000	11.5	13.5	46,000	3.72	7.8	29,200	2.62
3699207	25HBC348(A,W)**30	CNPV*4821A**	58MV(B,C)080−20	46,000	11.5	13.5	46,000	3.62	7.7	29,200	2.56
3699208	25HBC348(A,W)**30	CNPV*4821A**	58MV(B,C)100−20	46,000	11.5	13.5	46,000	3.64	7.7	29,400	2.56
3699210	25HBC348(A,W)**30	CNPV*4821A**	58PH*090−16	46,000	11.5	13.5	46,000	3.70	7.7	29,400	2.60
3699211	25HBC348(A,W)**30	CNPV*4821A**	58PH*110−20	46,000	11.5	13.5	46,000	3.72	7.8	29,000	2.62
3699475	25HBC348(A,W)**30	CNPV*4821A**	58UVB080−20	46,000	11.5	13.5	46,000	3.62	7.7	29,200	2.56
3699476	25HBC348(A,W)**30	CNPV*4821A**	58UVB100−20	46,000	11.5	13.5	46,000	3.64	7.7	29,400	2.56
3699337	25HBC348(A,W)**30	CNPV*4821A**	58VLR120−20	46,000	11.5	13.5	46,000	3.68	7.7	29,000	2.60
3699336	25HBC348(A,W)**30	CNPV*4821A**	58VMR120−20	46,000	11.5	13.5	46,000	3.66	7.7	29,200	2.58
3699206	25HBC348(A,W)**30	CNPV*4821A**+TDR		46,000	11.0	13.0	47,500	3.66	7.7	30,200	2.56
3699215	25HBC348(A,W)**30	CNPV*4824A**	58CV(A,X)135−22	46,000	11.5	13.5	46,000	3.70	7.7	29,000	2.62
3699216	25HBC348(A,W)**30	CNPV*4824A**	58CV(A,X)155−22	46,000	11.5	14.0	46,000	3.74	7.8	29,000	2.62
3699219	25HBC348(A,W)**30	CNPV*4824A**	58HDV100−−20(DW NFLWONLY)	46,000	11.5	13.5	46,000	3.68	7.7	29,400	2.58
3699218	25HBC348(A,W)**30	CNPV*4824A**	58ME(B,C)120−20	46,000	11.5	14.0	46,000	3.74	7.8	29,200	2.62
3699214	25HBC348(A,W)**30	CNPV*4824A**	58MV(B,C)120−20	46,000	11.5	13.5	46,000	3.66	7.7	29,200	2.58
3699217	25HBC348(A,W)**30	CNPV*4824A**	58PH*135−20	46,000	11.5	13.5	46,000	3.70	7.7	29,200	2.60
3699477	25HBC348(A,W)**30	CNPV*4824A**	58UVB120−20	46,000	11.5	13.5	46,000	3.66	7.7	29,200	2.58
3699213	25HBC348(A,W)**30	CNPV*4824A**+TDR		46,000	11.0	13.0	47,500	3.66	7.7	30,200	2.56
3699222	25HBC348(A,W)**30	CNPV*6024A**	58CV(A,X)135−22	47,000	11.5	14.0	46,000	3.74	7.8	29,000	2.64
3699223	25HBC348(A,W)**30	CNPV*6024A**	58CV(A,X)155−22	47,000	11.5	14.0	46,000	3.78	7.8	29,000	2.66
3699226	25HBC348(A,W)**30	CNPV*6024A**	58HDV100−−20(DW NFLWONLY)	47,000	11.5	13.5	46,000	3.72	7.8	29,600	2.62
3699225	25HBC348(A,W)**30	CNPV*6024A**	58ME(B,C)120−20	47,000	11.5	14.0	46,000	3.80	7.8	29,200	2.66
3699221	25HBC348(A,W)**30	CNPV*6024A**	58MV(B,C)120−20	47,000	11.5	13.5	46,000	3.70	7.8	29,200	2.62
3699224	25HBC348(A,W)**30	CNPV*6024A**	58PH*135−20	47,000	11.5	14.0	46,000	3.76	7.8	29,400	2.64
3699478	25HBC348(A,W)**30	CNPV*6024A**	58UVB120−20	47,000	11.5	13.5	46,000	3.70	7.8	29,200	2.62
3699220	25HBC348(A,W)**30	CNPV*6024A**+TDR		47,000	11.0	13.0	47,500	3.70	7.8	30,400	2.58
3699229	25HBC348(A,W)**30	CNPV*6124A**	58CV(A,X)135−22	47,000	11.5	14.0	46,000	3.84	7.8	29,200	2.68
3699230	25HBC348(A,W)**30	CNPV*6124A**	58CV(A,X)155−22	47,000	11.5	14.0	46,000	3.88	8.0	29,200	2.70
3699233	25HBC348(A,W)**30	CNPV*6124A**	58HDV100−−20(DW NFLWONLY)	47,000	11.5	13.5	46,000	3.82	7.8	29,800	2.64
3699232	25HBC348(A,W)**30	CNPV*6124A**	58ME(B,C)120−20	47,000	12.0	14.5	46,000	3.90	8.2	29,400	2.70
3699228	25HBC348(A,W)**30	CNPV*6124A**	58MV(B,C)120−20	47,000	11.5	14.0	46,000	3.80	7.8	29,400	2.66
3699231	25HBC348(A,W)**30	CNPV*6124A**	58PH*135−20	47,000	11.5	14.0	46,000	3.86	8.0	29,400	2.68
3699479	25HBC348(A,W)**30	CNPV*6124A**	58UVB120−20	47,000	11.5	14.0	46,000	3.80	7.8	29,400	2.66
3699227	25HBC348(A,W)**30	CNPV*6124A**+TDR		47,000	11.0	13.0	47,500	3.78	7.8	30,600	2.62
3699288	25HBC348(A,W)**30	CSPH*4812A**	58CV(A,X)090−16	46,000	11.5	13.5	46,000	3.68	7.7	29,400	2.58
3699289	25HBC348(A,W)**30	CSPH*4812A**	58CV(A,X)110−20	46,000	11.5	13.5	46,000	3.70	7.7	29,400	2.60
3699290	25HBC348(A,W)**30	CSPH*4812A**	58CV(A,X)135−22	46,000	11.5	13.5	46,000	3.72	7.8	29,200	2.62
3699291	25HBC348(A,W)**30	CSPH*4812A**	58CV(A,X)155−22	46,000	11.5	14.0	46,000	3.76	7.8	29,200	2.64
3699298	25HBC348(A,W)**30	CSPH*4812A**	58HDV080−−20	46,000	11.5	13.5	46,000	3.70	7.7	29,800	2.58
3699299	25HBC348(A,W)**30	CSPH*4812A**	58HDV100−−20	46,000	11.5	13.5	46,000	3.70	7.7	29,600	2.58
3699295	25HBC348(A,W)**30	CSPH*4812A**	58ME(B,C)080−16	46,000	11.5	13.5	46,000	3.70	7.7	29,600	2.58
3699296	25HBC348(A,W)**30	CSPH*4812A**	58ME(B,C)100−20	46,000	11.5	13.5	46,000	3.74	7.8	29,200	2.62
3699297	25HBC348(A,W)**30	CSPH*4812A**	58ME(B,C)120−20	46,000	11.5	13.5	46,000	3.76	7.8	29,200	2.64
3699285	25HBC348(A,W)**30	CSPH*4812A**	58MV(B,C)080−20	46,000	11.5	13.5	46,000	3.64	7.7	29,400	2.56
3699286	25HBC348(A,W)**30	CSPH*4812A**	58MV(B,C)100−20	46,000	11.5	13.5	46,000	3.66	7.7	29,600	2.56
3699287	25HBC348(A,W)**30	CSPH*4812A**	58MV(B,C)120−20	46,000	11.5	13.5	46,000	3.70	7.7	29,400	2.60
3699292	25HBC348(A,W)**30	CSPH*4812A**	58PH*090−16	46,000	11.5	13.5	46,000	3.72	7.8	29,400	2.60
3699293	25HBC348(A,W)**30	CSPH*4812A**	58PH*110−20	46,000	11.5	14.0	46,000	3.74	7.8	29,000	2.62
3699294	25HBC348(A,W)**30	CSPH*4812A**	58PH*135−20	46,000	11.5	13.5	46,000	3.72	7.8	29,200	2.60
3699345	25HBC348(A,W)**30	CSPH*4812A**	58VLR120−20	46,000	11.5	13.5	46,000	3.70	7.7	29,200	2.60
3699344	25HBC348(A,W)**30	CSPH*4812A**	58VMR120−20	46,000	11.5	13.5	46,000	3.68	7.7	29,400	2.58
3699284	25HBC348(A,W)**30	CSPH*4812A**+TDR		46,000	11.0	13.0	47,500	3.72	7.8	30,400	2.58
3699304	25HBC348(A,W)**30	CSPH*6012A**	58CV(A,X)090−16	47,000	11.5	14.0	46,000	3.74	7.8	29,400	2.62
3699305	25HBC348(A,W)**30	CSPH*6012A**	58CV(A,X)110−20	47,000	11.5	14.0	46,000	3.76	7.8	29,200	2.64
3699306	25HBC348(A,W)**30	CSPH*6012A**	58CV(A,X)135−22	47,000	11.5	14.0	46,000	3.78	7.8	29,200	2.66
3699307	25HBC348(A,W)**30	CSPH*6012A**	58CV(A,X)155−22	47,000	11.5	14.0	46,000	3.82	7.8	29,000	2.68
3699315	25HBC348(A,W)**30	CSPH*6012A**	58HDV080−−20	47,000	11.5	13.5	46,000	3.78	7.8	30,000	2.62
3699316	25HBC348(A,W)**30	CSPH*6012A**	58HDV100−−20	47,000	11.5	13.5	46,000	3.76	7.8	29,600	2.62
3699312	25HBC348(A,W)**30	CSPH*6012A**	58ME(B,C)080−16	47,000	11.5	13.5	46,000	3.76	7.8	29,800	2.62
3699313	25HBC348(A,W)**30	CSPH*6012A**	58ME(B,C)100−20	47,000	11.5	14.0	46,000	3.82	7.8	29,400	2.66
3699314	25HBC348(A,W)**30	CSPH*6012A**	58ME(B,C)120−20	47,000	11.5	14.0	46,000	3.84	8.0	29,400	2.68
3699301	25HBC348(A,W)**30	CSPH*6012A**	58MV(B,C)080−20	47,000	11.5	13.5	46,000	3.68	7.7	29,200	2.60
3699302	25HBC348(A,W)**30	CSPH*6012A**	58MV(B,C)100−20	47,000	11.5	13.5	46,000	3.72	7.8	29,600	2.62
3699303	25HBC348(A,W)**30	CSPH*6012A**	58MV(B,C)120−20	47,000	11.5	14.0	46,000	3.74	7.8	29,400	2.62
3699308	25HBC348(A,W)**30	CSPH*6012A**	58PH*070−16	47,000	11.0	13.0	46,000	3.64	7.7	30,400	2.54
3699309	25HBC348(A,W)**30	CSPH*6012A**	58PH*090−16	47,000	11.5	14.0	46,000	3.78	7.8	29,600	2.64
3699310	25HBC348(A,W)**30	CSPH*6012A**	58PH*110−20	47,000	11.5	14.0	46,000	3.82	7.8	29,200	2.68
3699311	25HBC348(A,W)**30	CSPH*6012A**	58PH*135−20	47,000	11.5	14.0	46,000	3.80	7.8	29,400	2.66
3699347	25HBC348(A,W)**30	CSPH*6012A**	58VLR120−20	47,000	11.5	14.0	46,000	3.76	7.7	29,200	2.64
3699346	25HBC348(A,W)**30	CSPH*6012A**	58VMR120−20	47,000	11.5	13.5	46,000	3.74	7.8	29,400	2.62
3699300	25HBC348(A,W)**30	CSPH*6012A**+TDR		47,000	11.0	13.0	47,500	3.74	7.8	30,400	2.60
3701603	25HBC348A**50	†FY5BNF048		47,000	11.0	13.0	47,500	3.74	7.8	30,000	2.62
3701754	25HBC348A**50	FB4CNF048		46,000	11.0	13.0	46,000	3.66	7.8	29,800	2.58
3701768	25HBC348A**50	FB4CNF048+TXV		46,000	11.0	13.5	46,000	3.68	7.8	29,800	2.58
3701755	25HBC348A**50	FB4CNF060		47,000	11.0	13.2	47,000	3.78	7.8	29,800	2.64
3701769	25HBC348A**50	FB4CNF060+TXV		47,000	11.5	14.0	47,000	3.78	7.8	29,800	2.64
3701759	25HBC348A**50	FE4AN(B,F)005+UI		47,000	12.5	14.0	46,000	3.76	7.8	29,000	2.66
3701760	25HBC348A**50	FE4ANB006+UI		47,000	12.5	14.5	46,000	3.88	8.0	29,000	2.72
3701761	25HBC348A**50	FV4BN(B,F)005		47,000	12.5	14.0	46,000	3.76	7.8	29,000	2.66
3701762	25HBC348A**50	FV4BNB006		47,000	12.5	14.5	46,000	3.88	8.0	29,000	2.72
3701763	25HBC348A**50	FV4CN(B,F)005		47,000	12.5	14.0	46,000	3.76	7.8	29,000	2.66
3701764	25HBC348A**50	FV4CNB006		47,000	12.5	14.5	46,000	3.88	8.0	29,000	2.72

See notes on page 45

COMBINATION RATINGS CONTINUED

AHRI Ref. No.	Model Number	Coil Model Number	Furnace Model Number	Cooling Capacity	EER	SEER	High Temp		HSPF	Low Temp	
							E Capacity	E COP		H Capacity	H COP
3701767	25HBC348A**50	FX4CN(B,F)060		47,000	11.5	14.0	47,500	3.90	8.0	29,800	2.70
3701757	25HBC348A**50	FX4DN(B,F)049		47,000	11.5	14.0	46,000	3.82	8.0	29,600	2.68
3701758	25HBC348A**50	FX4DN(B,F)061		47,000	12.5	14.5	47,500	3.94	8.2	29,600	2.72
3701766	25HBC348A**50	FY4ANB060		47,000	11.0	13.0	48,000	3.72	7.8	30,600	2.56
3701765	25HBC348A**50	FY4ANF048		47,000	11.0	13.0	47,500	3.62	7.7	30,600	2.54
3701756	25HBC348A**50	FY5BNB060		47,000	11.0	13.2	47,500	3.72	7.8	30,600	2.56
3701770	25HBC348A**50	FY5BNF048+TXV		47,000	11.0	13.5	47,500	3.74	7.8	30,000	2.62
3701605	25HBC348A**50	CAP**4817A**	58CV(A,X)090–16	46,000	11.5	13.5	46,000	3.68	7.7	29,400	2.58
3701606	25HBC348A**50	CAP**4817A**	58ME(B,C)080–16	46,000	11.5	13.5	46,000	3.70	7.7	29,800	2.58
3701604	25HBC348A**50	CAP**4817A**+TDR		46,000	11.0	13.0	47,500	3.64	7.7	29,800	2.56
3701609	25HBC348A**50	CAP**4821A**	58CV(A,X)110–20	46,000	11.5	13.5	46,000	3.66	7.7	29,200	2.58
3701612	25HBC348A**50	CAP**4821A**	58ME(B,C)100–20	46,000	11.5	13.5	46,000	3.70	7.7	29,200	2.60
3701608	25HBC348A**50	CAP**4821A**	58MV(B,C)100–20	46,000	11.5	13.5	46,000	3.62	7.7	29,600	2.56
3701610	25HBC348A**50	CAP**4821A**	58PH*090–16	46,000	11.5	13.5	46,000	3.68	7.7	29,400	2.58
3701611	25HBC348A**50	CAP**4821A**	58PH*110–20	46,000	11.5	13.5	46,000	3.70	7.7	29,000	2.60
3701900	25HBC348A**50	CAP**4821A**	58UVB100–20	46,000	11.5	13.5	46,000	3.62	7.7	29,600	2.56
3701772	25HBC348A**50	CAP**4821A**	58VLR120–20	46,000	11.5	13.5	46,000	3.66	7.7	29,200	2.58
3701771	25HBC348A**50	CAP**4821A**	58VMR120–20	46,000	11.5	13.2	46,000	3.64	7.8	29,400	2.56
3701607	25HBC348A**50	CAP**4821A**+TDR		46,000	11.0	13.0	47,500	3.66	7.7	30,200	2.56
3701635	25HBC348A**50	CAP**4823A**	58HDV080––20	46,000	11.5	13.2	46,000	3.66	7.7	29,800	2.56
3701634	25HBC348A**50	CAP**4823A**+TDR		46,000	11.0	13.0	47,500	3.66	7.7	30,200	2.56
3701615	25HBC348A**50	CAP**4824A**	58CV(A,X)135–22	46,000	11.5	13.5	46,000	3.70	7.7	29,000	2.60
3701616	25HBC348A**50	CAP**4824A**	58CV(A,X)155–22	46,000	11.5	14.0	46,000	3.72	7.8	29,000	2.62
3701619	25HBC348A**50	CAP**4824A**	58HDV100––20	46,000	11.5	13.5	46,000	3.68	7.7	29,400	2.58
3701618	25HBC348A**50	CAP**4824A**	58ME(B,C)120–20	46,000	11.5	13.5	46,000	3.74	7.8	29,200	2.62
3701614	25HBC348A**50	CAP**4824A**	58MV(B,C)120–20	46,000	11.5	13.5	46,000	3.66	7.7	29,200	2.58
3701617	25HBC348A**50	CAP**4824A**	58PH*135–20	46,000	11.5	13.5	46,000	3.70	7.7	29,200	2.60
3701901	25HBC348A**50	CAP**4824A**	58UVB120–20	46,000	11.5	13.5	46,000	3.66	7.7	29,200	2.58
3701613	25HBC348A**50	CAP**4824A**+TDR		46,000	11.0	13.0	47,500	3.66	7.7	30,200	2.56
3701623	25HBC348A**50	CAP**6021A**	58CV(A,X)110–20	47,000	11.5	13.5	46,000	3.72	7.8	29,200	2.62
3701626	25HBC348A**50	CAP**6021A**	58ME(B,C)100–20	47,000	11.5	14.0	46,000	3.76	7.8	29,400	2.64
3701621	25HBC348A**50	CAP**6021A**	58MV(B,C)080–20	46,000	11.5	13.5	46,000	3.64	7.7	29,400	2.58
3701622	25HBC348A**50	CAP**6021A**	58MV(B,C)100–20	47,000	11.5	13.5	46,000	3.68	7.7	29,600	2.60
3701624	25HBC348A**50	CAP**6021A**	58PH*090–16	47,000	11.5	14.0	46,000	3.74	7.8	29,400	2.62
3701625	25HBC348A**50	CAP**6021A**	58PH*110–20	47,000	11.5	14.0	46,000	3.76	7.8	29,200	2.66
3701902	25HBC348A**50	CAP**6021A**	58UVB080–20	46,000	11.5	13.5	46,000	3.64	7.7	29,400	2.58
3701903	25HBC348A**50	CAP**6021A**	58UVB100–20	47,000	11.5	13.5	46,000	3.68	7.7	29,600	2.60
3701774	25HBC348A**50	CAP**6021A**	58VLR120–20	46,000	11.5	14.0	46,000	3.72	7.7	29,200	2.62
3701773	25HBC348A**50	CAP**6021A**	58VMR120–20	46,000	11.5	13.5	46,000	3.68	7.7	29,400	2.60
3701620	25HBC348A**50	CAP**6021A**+TDR		47,000	11.0	13.0	47,500	3.72	7.8	30,400	2.58
3701629	25HBC348A**50	CAP**6024A**	58CV(A,X)135–22	47,000	11.5	14.0	46,000	3.74	7.8	29,200	2.64
3701630	25HBC348A**50	CAP**6024A**	58CV(A,X)155–22	47,000	11.5	14.0	46,000	3.78	7.8	29,000	2.66
3701633	25HBC348A**50	CAP**6024A**	58HDV100––20	47,000	11.5	13.5	46,000	3.72	7.8	29,600	2.62
3701632	25HBC348A**50	CAP**6024A**	58ME(B,C)120–20	47,000	11.5	14.0	46,000	3.80	7.8	29,200	2.66
3701628	25HBC348A**50	CAP**6024A**	58MV(B,C)120–20	47,000	11.5	13.5	46,000	3.70	7.8	29,400	2.62
3701631	25HBC348A**50	CAP**6024A**	58PH*135–20	47,000	11.5	14.0	46,000	3.76	7.8	29,400	2.64
3701904	25HBC348A**50	CAP**6024A**	58UVB120–20	47,000	11.5	13.5	46,000	3.70	7.8	29,400	2.62
3701627	25HBC348A**50	CAP**6024A**+TDR		47,000	11.0	13.0	47,500	3.72	7.8	30,400	2.58
3701638	25HBC348A**50	CAP**6025A**	58CV(A,X)135–22	47,000	11.5	14.0	46,000	3.74	7.8	29,200	2.64
3701639	25HBC348A**50	CAP**6025A**	58CV(A,X)155–22	47,000	11.5	14.0	46,000	3.78	7.8	29,000	2.66
3701642	25HBC348A**50	CAP**6025A**	58HDV100––20	47,000	11.5	13.5	46,000	3.72	7.8	29,600	2.62
3701641	25HBC348A**50	CAP**6025A**	58ME(B,C)120–20	47,000	11.5	14.0	46,000	3.80	7.8	29,200	2.66
3701637	25HBC348A**50	CAP**6025A**	58MV(B,C)120–20	47,000	11.5	13.5	46,000	3.70	7.8	29,400	2.62
3701640	25HBC348A**50	CAP**6025A**	58PH*135–20	47,000	11.5	14.0	46,000	3.76	7.8	29,400	2.64
3701905	25HBC348A**50	CAP**6025A**	58UVB120–20	47,000	11.5	13.5	46,000	3.70	7.8	29,400	2.62
3701636	25HBC348A**50	CAP**6025A**+TDR		47,000	11.0	13.0	47,500	3.72	7.8	30,400	2.58
3701675	25HBC348A**50	CNPH*4821A**	58CV(A,X)090–16	46,000	11.5	13.5	46,000	3.66	7.7	29,200	2.58
3701676	25HBC348A**50	CNPH*4821A**	58CV(A,X)110–20	46,000	11.5	13.5	46,000	3.68	7.7	29,200	2.60
3701677	25HBC348A**50	CNPH*4821A**	58CV(A,X)135–22	46,000	11.5	13.5	46,000	3.70	7.7	29,000	2.62
3701678	25HBC348A**50	CNPH*4821A**	58CV(A,X)155–22	46,000	11.5	14.0	46,000	3.74	7.8	29,000	2.62
3701685	25HBC348A**50	CNPH*4821A**	58HDV080––20	46,000	11.5	13.5	46,000	3.68	7.7	29,800	2.58
3701686	25HBC348A**50	CNPH*4821A**	58HDV100––20	46,000	11.5	13.5	46,000	3.68	7.7	29,400	2.58
3701682	25HBC348A**50	CNPH*4821A**	58ME(B,C)080–16	46,000	11.5	13.5	46,000	3.68	7.8	29,600	2.58
3701683	25HBC348A**50	CNPH*4821A**	58ME(B,C)100–20	46,000	11.5	13.5	46,000	3.72	7.8	29,200	2.62
3701684	25HBC348A**50	CNPH*4821A**	58ME(B,C)120–20	46,000	11.5	14.0	46,000	3.74	7.8	29,200	2.62
3701672	25HBC348A**50	CNPH*4821A**	58MV(B,C)080–20	46,000	11.5	13.5	46,000	3.62	7.7	29,200	2.56
3701673	25HBC348A**50	CNPH*4821A**	58MV(B,C)100–20	46,000	11.5	13.5	46,000	3.64	7.7	29,400	2.56
3701674	25HBC348A**50	CNPH*4821A**	58MV(B,C)120–20	46,000	11.5	13.5	46,000	3.66	7.7	29,200	2.58
3701679	25HBC348A**50	CNPH*4821A**	58PH*090–16	46,000	11.5	13.5	46,000	3.70	7.7	29,400	2.60
3701680	25HBC348A**50	CNPH*4821A**	58PH*110–20	46,000	11.5	14.0	46,000	3.72	7.8	29,000	2.62
3701681	25HBC348A**50	CNPH*4821A**	58PH*135–20	46,000	11.5	13.5	46,000	3.70	7.7	29,200	2.60
3701778	25HBC348A**50	CNPH*4821A**	58VLR120–20	46,000	11.5	13.5	46,000	3.68	7.7	29,000	2.60
3701777	25HBC348A**50	CNPH*4821A**	58VMR120–20	46,000	11.5	13.5	46,000	3.66	7.7	29,200	2.58
3701671	25HBC348A**50	CNPH*4821A**+TDR		46,000	11.0	13.0	47,500	3.66	7.7	30,200	2.56
3701691	25HBC348A**50	CNPH*6024A**	58CV(A,X)090–16	47,000	11.5	13.5	46,000	3.70	7.7	29,200	2.62
3701692	25HBC348A**50	CNPH*6024A**	58CV(A,X)110–20	47,000	11.5	14.0	46,000	3.72	7.8	29,200	2.62
3701693	25HBC348A**50	CNPH*6024A**	58CV(A,X)135–22	47,000	11.5	14.0	46,000	3.74	7.8	29,000	2.64
3701694	25HBC348A**50	CNPH*6024A**	58CV(A,X)155–22	47,000	11.5	14.0	46,000	3.78	7.8	29,000	2.66
3701702	25HBC348A**50	CNPH*6024A**	58HDV080––20	47,000	11.5	13.5	46,000	3.72	7.8	30,000	2.60
3701703	25HBC348A**50	CNPH*6024A**	58HDV100––20	47,000	11.5	13.5	46,000	3.72	7.8	29,600	2.62
3701699	25HBC348A**50	CNPH*6024A**	58ME(B,C)080–16	47,000	11.5	13.5	46,000	3.72	7.8	29,800	2.60
3701700	25HBC348A**50	CNPH*6024A**	58ME(B,C)100–20	47,000	11.5	14.0	46,000	3.78	7.8	29,400	2.66
3701701	25HBC348A**50	CNPH*6024A**	58ME(B,C)120–20	47,000	11.5	14.0	46,000	3.80	7.8	29,200	2.66
3701688	25HBC348A**50	CNPH*6024A**	58MV(B,C)080–20	46,000	11.5	13.5	46,000	3.66	7.7	29,200	2.60
3701689	25HBC348A**50	CNPH*6024A**	58MV(B,C)100–20	47,000	11.5	13.5	46,000	3.68	7.7	29,600	2.60
3701690	25HBC348A**50	CNPH*6024A**	58MV(B,C)120–20	47,000	11.5	13.5	46,000	3.70	7.8	29,200	2.62
3701695	25HBC348A**50	CNPH*6024A**	58PH*070–16	47,000	11.0	13.0	46,000	3.60	7.7	30,400	2.52

See notes on page 45

COMBINATION RATINGS CONTINUED

AHRI Ref. No.	Model Number	Coil Model Number	Furnace Model Number	Cooling Capacity	EER	SEER	High Temp		HSPF	Low Temp	
							E Capacity	E COP		H Capacity	H COP
3701696	25HBC348A**50	CNPH*6024A**	58PH*090−16	47,000	11.5	13.5	46,000	3.74	7.8	29,400	2.64
3701697	25HBC348A**50	CNPH*6024A**	58PH*110−20	47,000	11.5	14.0	46,000	3.78	7.8	29,200	2.66
3701698	25HBC348A**50	CNPH*6024A**	58PH*135−20	47,000	11.5	14.0	46,000	3.76	7.8	29,400	2.64
3701780	25HBC348A**50	CNPH*6024A**	58VLR120−20	46,000	11.5	14.0	46,000	3.72	7.8	29,200	2.64
3701779	25HBC348A**50	CNPH*6024A**	58VMR120−20	46,000	11.5	13.5	46,000	3.70	7.7	29,400	2.62
3701687	25HBC348A**50	CNPH*6024A**+TDR		47,000	11.0	13.0	47,500	3.70	7.8	30,400	2.58
3701708	25HBC348A**50	CNPH*6124A**	58CV(A,X)090−16	47,000	11.5	13.5	46,000	3.74	7.8	29,400	2.62
3701709	25HBC348A**50	CNPH*6124A**	58CV(A,X)110−20	47,000	11.5	14.0	46,000	3.76	7.8	29,400	2.64
3701710	25HBC348A**50	CNPH*6124A**	58CV(A,X)135−22	47,000	11.5	14.0	46,000	3.78	7.8	29,200	2.66
3701711	25HBC348A**50	CNPH*6124A**	58CV(A,X)155−22	47,000	11.5	14.0	46,000	3.82	7.8	29,200	2.68
3701719	25HBC348A**50	CNPH*6124A**	58HDV080−−20	47,000	11.5	13.5	46,000	3.76	7.8	30,000	2.62
3701720	25HBC348A**50	CNPH*6124A**	58HDV100−−20	47,000	11.5	13.5	46,000	3.76	7.8	29,600	2.62
3701716	25HBC348A**50	CNPH*6124A**	58ME(B,C)080−16	47,000	11.5	13.5	46,000	3.76	7.8	29,800	2.62
3701717	25HBC348A**50	CNPH*6124A**	58ME(B,C)100−20	47,000	11.5	14.0	46,000	3.80	7.8	29,400	2.66
3701718	25HBC348A**50	CNPH*6124A**	58ME(B,C)120−20	47,000	11.5	14.0	46,000	3.84	7.8	29,400	2.68
3701705	25HBC348A**50	CNPH*6124A**	58MV(B,C)080−20	46,000	11.5	13.5	46,000	3.68	7.7	29,400	2.60
3701706	25HBC348A**50	CNPH*6124A**	58MV(B,C)100−20	47,000	11.5	13.5	46,000	3.72	7.8	29,600	2.60
3701707	25HBC348A**50	CNPH*6124A**	58MV(B,C)120−20	47,000	11.5	13.5	46,000	3.74	7.8	29,400	2.62
3701712	25HBC348A**50	CNPH*6124A**	58PH*070−16	47,000	11.0	13.0	46,000	3.64	7.7	30,400	2.54
3701713	25HBC348A**50	CNPH*6124A**	58PH*090−16	47,000	11.5	14.0	46,000	3.78	7.8	29,600	2.64
3701714	25HBC348A**50	CNPH*6124A**	58PH*110−20	47,000	11.5	14.0	46,000	3.80	7.8	29,200	2.66
3701715	25HBC348A**50	CNPH*6124A**	58PH*135−20	47,000	11.5	14.0	46,000	3.78	7.8	29,400	2.64
3701782	25HBC348A**50	CNPH*6124A**	58VLR120−20	47,000	11.5	14.0	46,000	3.76	7.8	29,200	2.64
3701781	25HBC348A**50	CNPH*6124A**	58VMR120−20	47,000	11.5	13.5	46,000	3.72	7.8	29,400	2.62
3701704	25HBC348A**50	CNPH*6124A**+TDR		47,000	11.0	13.0	47,500	3.76	7.8	30,400	2.60
3701646	25HBC348A**50	CNPV*4821A**	58CV(A,X)110−20	46,000	11.5	13.5	46,000	3.68	7.7	29,200	2.60
3701649	25HBC348A**50	CNPV*4821A**	58ME(B,C)100−20	46,000	11.5	13.5	46,000	3.72	7.8	29,200	2.62
3701644	25HBC348A**50	CNPV*4821A**	58MV(B,C)080−20	46,000	11.5	13.5	46,000	3.62	7.7	29,200	2.56
3701645	25HBC348A**50	CNPV*4821A**	58MV(B,C)100−20	46,000	11.5	13.5	46,000	3.64	7.7	29,400	2.56
3701647	25HBC348A**50	CNPV*4821A**	58PH*090−16	46,000	11.5	13.5	46,000	3.70	7.7	29,400	2.60
3701648	25HBC348A**50	CNPV*4821A**	58PH*110−20	46,000	11.5	13.5	46,000	3.72	7.8	29,000	2.62
3701906	25HBC348A**50	CNPV*4821A**	58UVB080−20	46,000	11.5	13.5	46,000	3.62	7.7	29,200	2.56
3701907	25HBC348A**50	CNPV*4821A**	58UVB100−20	46,000	11.5	13.5	46,000	3.64	7.7	29,400	2.56
3701776	25HBC348A**50	CNPV*4821A**	58VLR120−20	46,000	11.5	13.5	46,000	3.68	7.7	29,000	2.60
3701775	25HBC348A**50	CNPV*4821A**	58VMR120−20	46,000	11.5	13.5	46,000	3.66	7.7	29,200	2.58
3701643	25HBC348A**50	CNPV*4821A**+TDR		46,000	11.0	13.0	47,500	3.66	7.7	30,200	2.56
3701652	25HBC348A**50	CNPV*4824A**	58CV(A,X)135−22	46,000	11.5	13.5	46,000	3.70	7.7	29,000	2.62
3701653	25HBC348A**50	CNPV*4824A**	58CV(A,X)155−22	46,000	11.5	14.0	46,000	3.74	7.8	29,000	2.62
3701656	25HBC348A**50	CNPV*4824A**	58HDV100−−20 (DWNFLWONLY)	46,000	11.5	13.5	46,000	3.68	7.7	29,400	2.58
3701655	25HBC348A**50	CNPV*4824A**	58ME(B,C)120−20	46,000	11.5	14.0	46,000	3.74	7.8	29,200	2.62
3701651	25HBC348A**50	CNPV*4824A**	58MV(B,C)120−20	46,000	11.5	13.5	46,000	3.66	7.7	29,200	2.58
3701654	25HBC348A**50	CNPV*4824A**	58PH*135−20	46,000	11.5	13.5	46,000	3.70	7.7	29,200	2.60
3701908	25HBC348A**50	CNPV*4824A**	58UVB120−20	46,000	11.5	13.5	46,000	3.66	7.7	29,200	2.58
3701650	25HBC348A**50	CNPV*4824A**+TDR		46,000	11.0	13.0	47,500	3.66	7.7	30,200	2.56
3701659	25HBC348A**50	CNPV*6024A**	58CV(A,X)135−22	47,000	11.5	14.0	46,000	3.74	7.8	29,000	2.64
3701660	25HBC348A**50	CNPV*6024A**	58CV(A,X)155−22	47,000	11.5	14.0	46,000	3.78	7.8	29,000	2.66
3701663	25HBC348A**50	CNPV*6024A**	58HDV100−−20 (DWNFLWONLY)	47,000	11.5	13.5	46,000	3.72	7.8	29,600	2.62
3701662	25HBC348A**50	CNPV*6024A**	58ME(B,C)120−20	47,000	11.5	14.0	46,000	3.80	7.8	29,200	2.66
3701658	25HBC348A**50	CNPV*6024A**	58MV(B,C)120−20	47,000	11.5	13.5	46,000	3.70	7.8	29,200	2.62
3701661	25HBC348A**50	CNPV*6024A**	58PH*135−20	47,000	11.5	14.0	46,000	3.76	7.8	29,400	2.64
3701909	25HBC348A**50	CNPV*6024A**	58UVB120−20	47,000	11.5	13.5	46,000	3.70	7.8	29,200	2.62
3701657	25HBC348A**50	CNPV*6024A**+TDR		47,000	11.0	13.0	47,500	3.70	7.8	30,400	2.58
3701666	25HBC348A**50	CNPV*6124A**	58CV(A,X)135−22	47,000	11.5	14.0	46,000	3.84	7.8	29,200	2.68
3701667	25HBC348A**50	CNPV*6124A**	58CV(A,X)155−22	47,000	11.5	14.0	46,000	3.88	8.0	29,200	2.70
3701670	25HBC348A**50	CNPV*6124A**	58HDV100−−20 (DWNFLWONLY)	47,000	11.5	13.5	46,000	3.82	7.8	29,800	2.64
3701669	25HBC348A**50	CNPV*6124A**	58ME(B,C)120−20	47,000	12.0	14.5	46,000	3.90	8.2	29,400	2.70
3701665	25HBC348A**50	CNPV*6124A**	58MV(B,C)120−20	47,000	11.5	14.0	46,000	3.80	7.8	29,400	2.66
3701668	25HBC348A**50	CNPV*6124A**	58PH*135−20	47,000	11.5	14.0	46,000	3.86	8.0	29,400	2.68
3701910	25HBC348A**50	CNPV*6124A**	58UVB120−20	47,000	11.5	14.0	46,000	3.80	7.8	29,400	2.66
3701664	25HBC348A**50	CNPV*6124A**+TDR		47,000	11.0	13.0	47,500	3.78	7.8	30,600	2.62
3701725	25HBC348A**50	CSPH*4812A**	58CV(A,X)090−16	46,000	11.5	13.5	46,000	3.68	7.7	29,400	2.58
3701726	25HBC348A**50	CSPH*4812A**	58CV(A,X)110−20	46,000	11.5	13.5	46,000	3.70	7.7	29,400	2.60
3701727	25HBC348A**50	CSPH*4812A**	58CV(A,X)135−22	46,000	11.5	13.5	46,000	3.72	7.8	29,200	2.62
3701728	25HBC348A**50	CSPH*4812A**	58CV(A,X)155−22	46,000	11.5	14.0	46,000	3.76	7.8	29,200	2.64
3701735	25HBC348A**50	CSPH*4812A**	58HDV080−−20	46,000	11.5	13.5	46,000	3.70	7.7	29,800	2.58
3701736	25HBC348A**50	CSPH*4812A**	58HDV100−−20	46,000	11.5	13.5	46,000	3.70	7.7	29,600	2.58
3701732	25HBC348A**50	CSPH*4812A**	58ME(B,C)080−16	46,000	11.5	13.5	46,000	3.70	7.7	29,600	2.58
3701733	25HBC348A**50	CSPH*4812A**	58ME(B,C)100−20	46,000	11.5	13.5	46,000	3.74	7.8	29,200	2.62
3701734	25HBC348A**50	CSPH*4812A**	58ME(B,C)120−20	46,000	11.5	13.5	46,000	3.76	7.8	29,200	2.64
3701722	25HBC348A**50	CSPH*4812A**	58MV(B,C)080−20	46,000	11.5	13.5	46,000	3.64	7.7	29,400	2.56
3701723	25HBC348A**50	CSPH*4812A**	58MV(B,C)100−20	46,000	11.5	13.5	46,000	3.66	7.7	29,600	2.56
3701724	25HBC348A**50	CSPH*4812A**	58MV(B,C)120−20	46,000	11.5	13.5	46,000	3.70	7.7	29,400	2.60
3701729	25HBC348A**50	CSPH*4812A**	58PH*090−16	46,000	11.5	13.5	46,000	3.72	7.8	29,400	2.60
3701730	25HBC348A**50	CSPH*4812A**	58PH*110−20	46,000	11.5	14.0	46,000	3.74	7.8	29,000	2.62
3701731	25HBC348A**50	CSPH*4812A**	58PH*135−20	46,000	11.5	13.5	46,000	3.72	7.8	29,200	2.60
3701784	25HBC348A**50	CSPH*4812A**	58VLR120−20	46,000	11.5	13.5	46,000	3.70	7.7	29,200	2.60
3701783	25HBC348A**50	CSPH*4812A**	58VMR120−20	46,000	11.5	13.5	46,000	3.68	7.7	29,400	2.58
3701721	25HBC348A**50	CSPH*4812A**+TDR		46,000	11.0	13.0	47,500	3.72	7.8	30,400	2.58
3701741	25HBC348A**50	CSPH*6012A**	58CV(A,X)090−16	47,000	11.5	14.0	46,000	3.74	7.8	29,400	2.62
3701742	25HBC348A**50	CSPH*6012A**	58CV(A,X)110−20	47,000	11.5	14.0	46,000	3.76	7.8	29,200	2.64
3701743	25HBC348A**50	CSPH*6012A**	58CV(A,X)135−22	47,000	11.5	14.0	46,000	3.78	7.8	29,200	2.66
3701744	25HBC348A**50	CSPH*6012A**	58CV(A,X)155−22	47,000	11.5	14.0	46,000	3.82	7.8	29,000	2.68
3701752	25HBC348A**50	CSPH*6012A**	58HDV080−−20	47,000	11.5	13.5	46,000	3.78	7.8	30,000	2.62
3701753	25HBC348A**50	CSPH*6012A**	58HDV100−−20	47,000	11.5	13.5	46,000	3.76	7.8	29,600	2.62

See notes on page 45

COMBINATION RATINGS CONTINUED

AHRI Ref. No.	Model Number	Coil Model Number	Furnace Model Number	Cooling Capacity	EER	SEER	High Temp		HSPF	Low Temp	
							E Capacity	E COP		H Capacity	H COP
3701749	25HBC348A**50	CSPH*6012A**	58ME(B,C)080−16	47,000	11.5	13.5	46,000	3.76	7.8	29,800	2.62
3701750	25HBC348A**50	CSPH*6012A**	58ME(B,C)100−20	47,000	11.5	14.0	46,000	3.82	7.8	29,400	2.66
3701751	25HBC348A**50	CSPH*6012A**	58ME(B,C)120−20	47,000	11.5	14.0	46,000	3.84	8.0	29,400	2.68
3701738	25HBC348A**50	CSPH*6012A**	58MV(B,C)080−20	47,000	11.5	13.5	46,000	3.68	7.7	29,200	2.60
3701739	25HBC348A**50	CSPH*6012A**	58MV(B,C)100−20	47,000	11.5	13.5	46,000	3.72	7.8	29,600	2.62
3701740	25HBC348A**50	CSPH*6012A**	58MV(B,C)120−20	47,000	11.5	14.0	46,000	3.74	7.8	29,400	2.62
3701745	25HBC348A**50	CSPH*6012A**	58PH*070−16	47,000	11.0	13.0	46,000	3.64	7.7	30,400	2.54
3701746	25HBC348A**50	CSPH*6012A**	58PH*090−16	47,000	11.5	14.0	46,000	3.78	7.8	29,600	2.64
3701747	25HBC348A**50	CSPH*6012A**	58PH*110−20	47,000	11.5	14.0	46,000	3.82	7.8	29,200	2.68
3701748	25HBC348A**50	CSPH*6012A**	58PH*135−20	47,000	11.5	14.0	46,000	3.80	7.8	29,400	2.66
3701786	25HBC348A**50	CSPH*6012A**	58VLR120−20	47,000	11.5	14.0	46,000	3.76	7.7	29,200	2.64
3701785	25HBC348A**50	CSPH*6012A**	58VMR120−20	47,000	11.5	13.5	46,000	3.74	7.8	29,400	2.62
3701737	25HBC348A**50	CSPH*6012A**+TDR		47,000	11.0	13.0	47,500	3.74	7.8	30,400	2.60
3702178	25HBC348A**60	†FY5BNF048		47,000	11.0	13.0	47,500	3.74	7.8	30,000	2.62
3702329	25HBC348A**60	FB4CNF048		46,000	11.0	13.0	46,000	3.66	7.8	29,800	2.58
3702343	25HBC348A**60	FB4CNF048+TXV		46,000	11.0	13.5	46,000	3.68	7.8	29,800	2.58
3702330	25HBC348A**60	FB4CNF060		47,000	11.0	13.2	47,000	3.78	7.8	29,800	2.64
3702344	25HBC348A**60	FB4CNF060+TXV		47,000	11.5	14.0	47,000	3.78	7.8	29,800	2.64
3702334	25HBC348A**60	FE4AN(B,F)005+UI		47,000	12.5	14.0	46,000	3.76	7.8	29,000	2.66
3702335	25HBC348A**60	FE4ANB006+UI		47,000	12.5	14.5	46,000	3.88	8.0	29,000	2.72
3702336	25HBC348A**60	FV4BN(B,F)005		47,000	12.5	14.0	46,000	3.76	7.8	29,000	2.66
3702337	25HBC348A**60	FV4BNB006		47,000	12.5	14.5	46,000	3.88	8.0	29,000	2.72
3702338	25HBC348A**60	FV4CN(B,F)005		47,000	12.5	14.0	46,000	3.76	7.8	29,000	2.66
3702339	25HBC348A**60	FV4CNB006		47,000	12.5	14.5	46,000	3.88	8.0	29,000	2.72
3702342	25HBC348A**60	FX4CN(B,F)060		47,000	11.5	14.0	47,500	3.90	8.0	29,800	2.70
3702332	25HBC348A**60	FX4DN(B,F)049		47,000	11.5	14.0	46,000	3.82	8.0	29,600	2.68
3702333	25HBC348A**60	FX4DN(B,F)061		47,000	12.5	14.5	47,500	3.94	8.2	29,600	2.72
3702341	25HBC348A**60	FY4ANB060		47,000	11.0	13.0	48,000	3.72	7.8	30,600	2.56
3702340	25HBC348A**60	FY4ANF048		47,000	11.0	13.0	47,500	3.62	7.7	30,600	2.54
3702331	25HBC348A**60	FY5BNB060		47,000	11.0	13.2	47,500	3.72	7.8	30,600	2.56
3702345	25HBC348A**60	FY5BNF048+TXV		47,000	11.0	13.5	47,500	3.74	7.8	30,000	2.62
3702180	25HBC348A**60	CAP**4817A**	58CV(A,X)090−16	46,000	11.5	13.5	46,000	3.68	7.7	29,400	2.58
3702181	25HBC348A**60	CAP**4817A**	58ME(B,C)080−16	46,000	11.5	13.5	46,000	3.70	7.7	29,800	2.58
3702179	25HBC348A**60	CAP**4817A**+TDR		46,000	11.0	13.0	47,500	3.64	7.7	29,800	2.56
3702184	25HBC348A**60	CAP**4821A**	58CV(A,X)110−20	46,000	11.5	13.5	46,000	3.66	7.7	29,200	2.58
3702187	25HBC348A**60	CAP**4821A**	58ME(B,C)100−20	46,000	11.5	13.5	46,000	3.70	7.7	29,200	2.60
3702183	25HBC348A**60	CAP**4821A**	58MV(B,C)100−20	46,000	11.5	13.5	46,000	3.62	7.7	29,600	2.56
3702185	25HBC348A**60	CAP**4821A**	58PH*090−16	46,000	11.5	13.5	46,000	3.68	7.7	29,400	2.58
3702186	25HBC348A**60	CAP**4821A**	58PH*110−20	46,000	11.5	13.5	46,000	3.70	7.7	29,000	2.60
3702446	25HBC348A**60	CAP**4821A**	58UVB100−20	46,000	11.5	13.5	46,000	3.62	7.7	29,600	2.56
3702347	25HBC348A**60	CAP**4821A**	58VLR120−20	46,000	11.5	13.5	46,000	3.66	7.7	29,200	2.58
3702346	25HBC348A**60	CAP**4821A**	58VMR120−20	46,000	11.5	13.2	46,000	3.64	7.8	29,400	2.56
3702182	25HBC348A**60	CAP**4821A**+TDR		46,000	11.0	13.0	47,500	3.66	7.7	30,200	2.56
3702210	25HBC348A**60	CAP**4823A**	58HDV080−−20	46,000	11.5	13.2	46,000	3.66	7.7	29,800	2.56
3702209	25HBC348A**60	CAP**4823A**+TDR		46,000	11.0	13.0	47,500	3.66	7.7	30,200	2.56
3702190	25HBC348A**60	CAP**4824A**	58CV(A,X)135−22	46,000	11.5	13.5	46,000	3.70	7.7	29,000	2.60
3702191	25HBC348A**60	CAP**4824A**	58CV(A,X)155−22	46,000	11.5	14.0	46,000	3.72	7.8	29,000	2.62
3702194	25HBC348A**60	CAP**4824A**	58HDV100−−20	46,000	11.5	13.5	46,000	3.68	7.7	29,400	2.58
3702193	25HBC348A**60	CAP**4824A**	58ME(B,C)120−20	46,000	11.5	13.5	46,000	3.74	7.8	29,200	2.62
3702189	25HBC348A**60	CAP**4824A**	58MV(B,C)120−20	46,000	11.5	13.5	46,000	3.66	7.7	29,200	2.58
3702192	25HBC348A**60	CAP**4824A**	58PH*135−20	46,000	11.5	13.5	46,000	3.70	7.7	29,200	2.60
3702447	25HBC348A**60	CAP**4824A**	58UVB120−20	46,000	11.5	13.5	46,000	3.66	7.7	29,200	2.58
3702188	25HBC348A**60	CAP**4824A**+TDR		46,000	11.0	13.0	47,500	3.66	7.7	30,200	2.56
3702198	25HBC348A**60	CAP**6021A**	58CV(A,X)110−20	47,000	11.5	13.5	46,000	3.72	7.8	29,200	2.62
3702201	25HBC348A**60	CAP**6021A**	58ME(B,C)100−20	47,000	11.5	14.0	46,000	3.76	7.8	29,400	2.64
3702196	25HBC348A**60	CAP**6021A**	58MV(B,C)080−20	46,000	11.5	13.5	46,000	3.64	7.7	29,400	2.58
3702197	25HBC348A**60	CAP**6021A**	58MV(B,C)100−20	47,000	11.5	13.5	46,000	3.68	7.7	29,600	2.60
3702199	25HBC348A**60	CAP**6021A**	58PH*090−16	47,000	11.5	14.0	46,000	3.74	7.8	29,400	2.62
3702200	25HBC348A**60	CAP**6021A**	58PH*110−20	47,000	11.5	14.0	46,000	3.76	7.8	29,200	2.66
3702448	25HBC348A**60	CAP**6021A**	58UVB080−20	46,000	11.5	13.5	46,000	3.64	7.7	29,400	2.58
3702449	25HBC348A**60	CAP**6021A**	58UVB100−20	47,000	11.5	13.5	46,000	3.68	7.7	29,600	2.60
3702349	25HBC348A**60	CAP**6021A**	58VLR120−20	46,000	11.5	14.0	46,000	3.72	7.7	29,200	2.62
3702348	25HBC348A**60	CAP**6021A**	58VMR120−20	46,000	11.5	13.5	46,000	3.68	7.7	29,400	2.60
3702195	25HBC348A**60	CAP**6021A**+TDR		47,000	11.0	13.0	47,500	3.72	7.8	30,400	2.58
3702204	25HBC348A**60	CAP**6024A**	58CV(A,X)135−22	47,000	11.5	14.0	46,000	3.74	7.8	29,200	2.64
3702205	25HBC348A**60	CAP**6024A**	58CV(A,X)155−22	47,000	11.5	14.0	46,000	3.78	7.8	29,000	2.66
3702208	25HBC348A**60	CAP**6024A**	58HDV100−−20	47,000	11.5	13.5	46,000	3.72	7.8	29,600	2.62
3702207	25HBC348A**60	CAP**6024A**	58ME(B,C)120−20	47,000	11.5	14.0	46,000	3.80	7.8	29,200	2.66
3702203	25HBC348A**60	CAP**6024A**	58MV(B,C)120−20	47,000	11.5	13.5	46,000	3.70	7.8	29,400	2.62
3702206	25HBC348A**60	CAP**6024A**	58PH*135−20	47,000	11.5	14.0	46,000	3.76	7.8	29,400	2.64
3702450	25HBC348A**60	CAP**6024A**	58UVB120−20	47,000	11.5	13.5	46,000	3.70	7.8	29,400	2.62
3702202	25HBC348A**60	CAP**6024A**+TDR		47,000	11.0	13.0	47,500	3.72	7.8	30,400	2.58
3702213	25HBC348A**60	CAP**6025A**	58CV(A,X)135−22	47,000	11.5	14.0	46,000	3.74	7.8	29,200	2.64
3702214	25HBC348A**60	CAP**6025A**	58CV(A,X)155−22	47,000	11.5	14.0	46,000	3.78	7.8	29,000	2.66
3702217	25HBC348A**60	CAP**6025A**	58HDV100−−20	47,000	11.5	13.5	46,000	3.72	7.8	29,600	2.62
3702216	25HBC348A**60	CAP**6025A**	58ME(B,C)120−20	47,000	11.5	14.0	46,000	3.80	7.8	29,200	2.66
3702212	25HBC348A**60	CAP**6025A**	58MV(B,C)120−20	47,000	11.5	13.5	46,000	3.70	7.8	29,400	2.62
3702215	25HBC348A**60	CAP**6025A**	58PH*135−20	47,000	11.5	14.0	46,000	3.76	7.8	29,400	2.64
3702451	25HBC348A**60	CAP**6025A**	58UVB120−20	47,000	11.5	13.5	46,000	3.70	7.8	29,400	2.62
3702211	25HBC348A**60	CAP**6025A**+TDR		47,000	11.0	13.0	47,500	3.72	7.8	30,400	2.58
3702250	25HBC348A**60	CNPH*4821A**	58CV(A,X)090−16	46,000	11.5	13.5	46,000	3.66	7.7	29,200	2.58
3702251	25HBC348A**60	CNPH*4821A**	58CV(A,X)110−20	46,000	11.5	13.5	46,000	3.68	7.7	29,200	2.60
3702252	25HBC348A**60	CNPH*4821A**	58CV(A,X)135−22	46,000	11.5	13.5	46,000	3.70	7.7	29,000	2.62
3702253	25HBC348A**60	CNPH*4821A**	58CV(A,X)155−22	46,000	11.5	14.0	46,000	3.74	7.8	29,000	2.62
3702260	25HBC348A**60	CNPH*4821A**	58HDV080−−20	46,000	11.5	13.5	46,000	3.68	7.7	29,800	2.58
3702261	25HBC348A**60	CNPH*4821A**	58HDV100−−20	46,000	11.5	13.5	46,000	3.68	7.7	29,400	2.58

See notes on page 45

COMBINATION RATINGS CONTINUED

AHRI Ref. No.	Model Number	Coil Model Number	Furnace Model Number	Cooling Capacity	EER	SEER	High Temp		HSPF	Low Temp	
							E Capacity	E COP		H Capacity	H COP
3702257	25HBC348A**60	CNPH*4821A**	58ME(B,C)080−16	46,000	11.5	13.5	46,000	3.68	7.8	29,600	2.58
3702258	25HBC348A**60	CNPH*4821A**	58ME(B,C)100−20	46,000	11.5	13.5	46,000	3.72	7.8	29,200	2.62
3702259	25HBC348A**60	CNPH*4821A**	58ME(B,C)120−20	46,000	11.5	14.0	46,000	3.74	7.8	29,200	2.62
3702247	25HBC348A**60	CNPH*4821A**	58MV(B,C)080−20	46,000	11.5	13.5	46,000	3.62	7.7	29,200	2.56
3702248	25HBC348A**60	CNPH*4821A**	58MV(B,C)100−20	46,000	11.5	13.5	46,000	3.64	7.7	29,400	2.56
3702249	25HBC348A**60	CNPH*4821A**	58MV(B,C)120−20	46,000	11.5	13.5	46,000	3.66	7.7	29,200	2.58
3702254	25HBC348A**60	CNPH*4821A**	58PH*090−16	46,000	11.5	13.5	46,000	3.70	7.7	29,400	2.60
3702255	25HBC348A**60	CNPH*4821A**	58PH*110−20	46,000	11.5	14.0	46,000	3.72	7.8	29,000	2.62
3702256	25HBC348A**60	CNPH*4821A**	58PH*135−20	46,000	11.5	13.5	46,000	3.70	7.7	29,200	2.60
3702353	25HBC348A**60	CNPH*4821A**	58VLR120−20	46,000	11.5	13.5	46,000	3.68	7.7	29,000	2.60
3702352	25HBC348A**60	CNPH*4821A**	58VMR120−20	46,000	11.5	13.5	46,000	3.66	7.7	29,200	2.58
3702246	25HBC348A**60	CNPH*4821A**+TDR		46,000	11.0	13.0	47,500	3.66	7.7	30,200	2.56
3702266	25HBC348A**60	CNPH*6024A**	58CV(A,X)090−16	47,000	11.5	13.5	46,000	3.70	7.7	29,200	2.62
3702267	25HBC348A**60	CNPH*6024A**	58CV(A,X)110−20	47,000	11.5	14.0	46,000	3.72	7.8	29,200	2.62
3702268	25HBC348A**60	CNPH*6024A**	58CV(A,X)135−22	47,000	11.5	14.0	46,000	3.74	7.8	29,000	2.64
3702269	25HBC348A**60	CNPH*6024A**	58CV(A,X)155−22	47,000	11.5	14.0	46,000	3.78	7.8	29,000	2.66
3702277	25HBC348A**60	CNPH*6024A**	58HDV080−−20	47,000	11.5	13.5	46,000	3.72	7.8	30,000	2.60
3702278	25HBC348A**60	CNPH*6024A**	58HDV100−−20	47,000	11.5	13.5	46,000	3.72	7.8	29,600	2.62
3702274	25HBC348A**60	CNPH*6024A**	58ME(B,C)080−16	47,000	11.5	13.5	46,000	3.72	7.8	29,800	2.60
3702275	25HBC348A**60	CNPH*6024A**	58ME(B,C)100−20	47,000	11.5	14.0	46,000	3.78	7.8	29,400	2.66
3702276	25HBC348A**60	CNPH*6024A**	58ME(B,C)120−20	47,000	11.5	14.0	46,000	3.80	7.8	29,200	2.66
3702263	25HBC348A**60	CNPH*6024A**	58MV(B,C)080−20	46,000	11.5	13.5	46,000	3.66	7.7	29,200	2.60
3702264	25HBC348A**60	CNPH*6024A**	58MV(B,C)100−20	47,000	11.5	13.5	46,000	3.68	7.7	29,600	2.60
3702265	25HBC348A**60	CNPH*6024A**	58MV(B,C)120−20	47,000	11.5	13.5	46,000	3.70	7.8	29,200	2.62
3702270	25HBC348A**60	CNPH*6024A**	58PH*070−16	47,000	11.0	13.0	46,000	3.60	7.7	30,400	2.52
3702271	25HBC348A**60	CNPH*6024A**	58PH*090−16	47,000	11.5	13.5	46,000	3.74	7.8	29,400	2.64
3702272	25HBC348A**60	CNPH*6024A**	58PH*110−20	47,000	11.5	14.0	46,000	3.78	7.8	29,200	2.66
3702273	25HBC348A**60	CNPH*6024A**	58PH*135−20	47,000	11.5	14.0	46,000	3.76	7.8	29,400	2.64
3702355	25HBC348A**60	CNPH*6024A**	58VLR120−20	46,000	11.5	14.0	46,000	3.72	7.8	29,200	2.64
3702354	25HBC348A**60	CNPH*6024A**	58VMR120−20	46,000	11.5	13.5	46,000	3.70	7.7	29,400	2.62
3702262	25HBC348A**60	CNPH*6024A**+TDR		47,000	11.0	13.0	47,500	3.70	7.8	30,400	2.58
3702283	25HBC348A**60	CNPH*6124A**	58CV(A,X)090−16	47,000	11.5	13.5	46,000	3.74	7.8	29,400	2.62
3702284	25HBC348A**60	CNPH*6124A**	58CV(A,X)110−20	47,000	11.5	14.0	46,000	3.76	7.8	29,400	2.64
3702285	25HBC348A**60	CNPH*6124A**	58CV(A,X)135−22	47,000	11.5	14.0	46,000	3.78	7.8	29,200	2.66
3702286	25HBC348A**60	CNPH*6124A**	58CV(A,X)155−22	47,000	11.5	14.0	46,000	3.82	7.8	29,200	2.68
3702294	25HBC348A**60	CNPH*6124A**	58HDV080−−20	47,000	11.5	13.5	46,000	3.76	7.8	30,000	2.62
3702295	25HBC348A**60	CNPH*6124A**	58HDV100−−20	47,000	11.5	13.5	46,000	3.76	7.8	29,600	2.62
3702291	25HBC348A**60	CNPH*6124A**	58ME(B,C)080−16	47,000	11.5	13.5	46,000	3.76	7.8	29,800	2.62
3702292	25HBC348A**60	CNPH*6124A**	58ME(B,C)100−20	47,000	11.5	14.0	46,000	3.80	7.8	29,400	2.66
3702293	25HBC348A**60	CNPH*6124A**	58ME(B,C)120−20	47,000	11.5	14.0	46,000	3.84	7.8	29,400	2.68
3702280	25HBC348A**60	CNPH*6124A**	58MV(B,C)080−20	46,000	11.5	13.5	46,000	3.68	7.7	29,400	2.60
3702281	25HBC348A**60	CNPH*6124A**	58MV(B,C)100−20	47,000	11.5	13.5	46,000	3.72	7.8	29,600	2.60
3702282	25HBC348A**60	CNPH*6124A**	58MV(B,C)120−20	47,000	11.5	13.5	46,000	3.74	7.8	29,400	2.62
3702287	25HBC348A**60	CNPH*6124A**	58PH*070−16	47,000	11.0	13.0	46,000	3.64	7.7	30,400	2.54
3702288	25HBC348A**60	CNPH*6124A**	58PH*090−16	47,000	11.5	14.0	46,000	3.78	7.8	29,600	2.64
3702289	25HBC348A**60	CNPH*6124A**	58PH*110−20	47,000	11.5	14.0	46,000	3.80	7.8	29,200	2.66
3702290	25HBC348A**60	CNPH*6124A**	58PH*135−20	47,000	11.5	14.0	46,000	3.78	7.8	29,400	2.64
3702357	25HBC348A**60	CNPH*6124A**	58VLR120−20	47,000	11.5	14.0	46,000	3.76	7.8	29,200	2.64
3702356	25HBC348A**60	CNPH*6124A**	58VMR120−20	47,000	11.5	13.5	46,000	3.72	7.8	29,400	2.62
3702279	25HBC348A**60	CNPH*6124A**+TDR		47,000	11.0	13.0	47,500	3.76	7.8	30,400	2.60
3702221	25HBC348A**60	CNPV*4821A**	58CV(A,X)110−20	46,000	11.5	13.5	46,000	3.68	7.7	29,200	2.60
3702224	25HBC348A**60	CNPV*4821A**	58ME(B,C)100−20	46,000	11.5	13.5	46,000	3.72	7.8	29,200	2.62
3702219	25HBC348A**60	CNPV*4821A**	58MV(B,C)080−20	46,000	11.5	13.5	46,000	3.62	7.7	29,200	2.56
3702220	25HBC348A**60	CNPV*4821A**	58MV(B,C)100−20	46,000	11.5	13.5	46,000	3.64	7.7	29,400	2.56
3702222	25HBC348A**60	CNPV*4821A**	58PH*090−16	46,000	11.5	13.5	46,000	3.70	7.7	29,400	2.60
3702223	25HBC348A**60	CNPV*4821A**	58PH*110−20	46,000	11.5	13.5	46,000	3.72	7.8	29,000	2.62
3702452	25HBC348A**60	CNPV*4821A**	58UVB080−20	46,000	11.5	13.5	46,000	3.62	7.7	29,200	2.56
3702453	25HBC348A**60	CNPV*4821A**	58UVB100−20	46,000	11.5	13.5	46,000	3.64	7.7	29,400	2.56
3702351	25HBC348A**60	CNPV*4821A**	58VLR120−20	46,000	11.5	13.5	46,000	3.68	7.7	29,000	2.60
3702350	25HBC348A**60	CNPV*4821A**	58VMR120−20	46,000	11.5	13.5	46,000	3.66	7.7	29,200	2.58
3702218	25HBC348A**60	CNPV*4821A**+TDR		46,000	11.0	13.0	47,500	3.66	7.7	30,200	2.56
3702227	25HBC348A**60	CNPV*4824A**	58CV(A,X)135−22	46,000	11.5	13.5	46,000	3.70	7.7	29,000	2.62
3702228	25HBC348A**60	CNPV*4824A**	58CV(A,X)155−22	46,000	11.5	14.0	46,000	3.74	7.8	29,000	2.62
3702231	25HBC348A**60	CNPV*4824A**	58HDV100−−20 (DWNFLWONLY)	46,000	11.5	13.5	46,000	3.68	7.7	29,400	2.58
3702230	25HBC348A**60	CNPV*4824A**	58ME(B,C)120−20	46,000	11.5	14.0	46,000	3.74	7.8	29,200	2.62
3702226	25HBC348A**60	CNPV*4824A**	58MV(B,C)120−20	46,000	11.5	13.5	46,000	3.66	7.7	29,200	2.58
3702229	25HBC348A**60	CNPV*4824A**	58PH*135−20	46,000	11.5	13.5	46,000	3.70	7.7	29,200	2.60
3702454	25HBC348A**60	CNPV*4824A**	58UVB120−20	46,000	11.5	13.5	46,000	3.66	7.7	29,200	2.58
3702225	25HBC348A**60	CNPV*4824A**+TDR		46,000	11.0	13.0	47,500	3.66	7.7	30,200	2.56
3702234	25HBC348A**60	CNPV*6024A**	58CV(A,X)135−22	47,000	11.5	14.0	46,000	3.74	7.8	29,000	2.64
3702235	25HBC348A**60	CNPV*6024A**	58CV(A,X)155−22	47,000	11.5	14.0	46,000	3.78	7.8	29,000	2.66
3702238	25HBC348A**60	CNPV*6024A**	58HDV100−−20 (DWNFLWONLY)	47,000	11.5	13.5	46,000	3.72	7.8	29,600	2.62
3702237	25HBC348A**60	CNPV*6024A**	58ME(B,C)120−20	47,000	11.5	14.0	46,000	3.80	7.8	29,200	2.66
3702233	25HBC348A**60	CNPV*6024A**	58MV(B,C)120−20	47,000	11.5	13.5	46,000	3.70	7.8	29,200	2.62
3702236	25HBC348A**60	CNPV*6024A**	58PH*135−20	47,000	11.5	14.0	46,000	3.76	7.8	29,400	2.64
3702455	25HBC348A**60	CNPV*6024A**	58UVB120−20	47,000	11.5	13.5	46,000	3.70	7.8	29,200	2.62
3702232	25HBC348A**60	CNPV*6024A**+TDR		47,000	11.0	13.0	47,500	3.70	7.8	30,400	2.58
3702241	25HBC348A**60	CNPV*6124A**	58CV(A,X)135−22	47,000	11.5	14.0	46,000	3.84	7.8	29,200	2.68
3702242	25HBC348A**60	CNPV*6124A**	58CV(A,X)155−22	47,000	11.5	14.0	46,000	3.88	8.0	29,200	2.70
3702245	25HBC348A**60	CNPV*6124A**	58HDV100−−20 (DWNFLWONLY)	47,000	11.5	13.5	46,000	3.82	7.8	29,800	2.64
3702244	25HBC348A**60	CNPV*6124A**	58ME(B,C)120−20	47,000	12.0	14.5	46,000	3.90	8.2	29,400	2.70
3702240	25HBC348A**60	CNPV*6124A**	58MV(B,C)120−20	47,000	11.5	14.0	46,000	3.80	7.8	29,400	2.66
3702243	25HBC348A**60	CNPV*6124A**	58PH*135−20	47,000	11.5	14.0	46,000	3.86	8.0	29,400	2.68
3702456	25HBC348A**60	CNPV*6124A**	58UVB120−20	47,000	11.5	14.0	46,000	3.80	7.8	29,400	2.66

See notes on page 45

COMBINATION RATINGS CONTINUED

AHRI Ref. No.	Model Number	Coil Model Number	Furnace Model Number	Cooling Capacity	EER	SEER	High Temp		HSPF	Low Temp	
							E Capacity	E COP		H Capacity	H COP
3702239	25HBC348A**60	CNPV*6124A**+TDR		47,000	11.0	13.0	47,500	3.78	7.8	30,600	2.62
3702300	25HBC348A**60	CSPH*4812A**	58CV(A,X)090−16	46,000	11.5	13.5	46,000	3.68	7.7	29,400	2.58
3702301	25HBC348A**60	CSPH*4812A**	58CV(A,X)110−20	46,000	11.5	13.5	46,000	3.70	7.7	29,400	2.60
3702302	25HBC348A**60	CSPH*4812A**	58CV(A,X)135−22	46,000	11.5	13.5	46,000	3.72	7.8	29,200	2.62
3702303	25HBC348A**60	CSPH*4812A**	58CV(A,X)155−22	46,000	11.5	14.0	46,000	3.76	7.8	29,200	2.64
3702310	25HBC348A**60	CSPH*4812A**	58HDV080−−20	46,000	11.5	13.5	46,000	3.70	7.7	29,800	2.58
3702311	25HBC348A**60	CSPH*4812A**	58HDV100−−20	46,000	11.5	13.5	46,000	3.70	7.7	29,600	2.58
3702307	25HBC348A**60	CSPH*4812A**	58ME(B,C)080−16	46,000	11.5	13.5	46,000	3.70	7.7	29,600	2.58
3702308	25HBC348A**60	CSPH*4812A**	58ME(B,C)100−20	46,000	11.5	13.5	46,000	3.74	7.8	29,200	2.62
3702309	25HBC348A**60	CSPH*4812A**	58ME(B,C)120−20	46,000	11.5	13.5	46,000	3.76	7.8	29,200	2.64
3702297	25HBC348A**60	CSPH*4812A**	58MV(B,C)080−20	46,000	11.5	13.5	46,000	3.64	7.7	29,400	2.56
3702298	25HBC348A**60	CSPH*4812A**	58MV(B,C)100−20	46,000	11.5	13.5	46,000	3.66	7.7	29,600	2.56
3702299	25HBC348A**60	CSPH*4812A**	58MV(B,C)120−20	46,000	11.5	13.5	46,000	3.70	7.7	29,400	2.60
3702304	25HBC348A**60	CSPH*4812A**	58PH*090−16	46,000	11.5	13.5	46,000	3.72	7.8	29,400	2.60
3702305	25HBC348A**60	CSPH*4812A**	58PH*110−20	46,000	11.5	14.0	46,000	3.74	7.8	29,000	2.62
3702306	25HBC348A**60	CSPH*4812A**	58PH*135−20	46,000	11.5	13.5	46,000	3.72	7.8	29,200	2.60
3702359	25HBC348A**60	CSPH*4812A**	58VLR120−20	46,000	11.5	13.5	46,000	3.70	7.7	29,200	2.60
3702358	25HBC348A**60	CSPH*4812A**	58VMR120−20	46,000	11.5	13.5	46,000	3.68	7.7	29,400	2.58
3702296	25HBC348A**60	CSPH*4812A**+TDR		46,000	11.0	13.0	47,500	3.72	7.8	30,400	2.58
3702316	25HBC348A**60	CSPH*6012A**	58CV(A,X)090−16	47,000	11.5	14.0	46,000	3.74	7.8	29,400	2.62
3702317	25HBC348A**60	CSPH*6012A**	58CV(A,X)110−20	47,000	11.5	14.0	46,000	3.76	7.8	29,200	2.64
3702318	25HBC348A**60	CSPH*6012A**	58CV(A,X)135−22	47,000	11.5	14.0	46,000	3.78	7.8	29,200	2.66
3702319	25HBC348A**60	CSPH*6012A**	58CV(A,X)155−22	47,000	11.5	14.0	46,000	3.82	7.8	29,000	2.68
3702327	25HBC348A**60	CSPH*6012A**	58HDV080−−20	47,000	11.5	13.5	46,000	3.78	7.8	30,000	2.62
3702328	25HBC348A**60	CSPH*6012A**	58HDV100−−20	47,000	11.5	13.5	46,000	3.76	7.8	29,600	2.62
3702324	25HBC348A**60	CSPH*6012A**	58ME(B,C)080−16	47,000	11.5	13.5	46,000	3.76	7.8	29,800	2.62
3702325	25HBC348A**60	CSPH*6012A**	58ME(B,C)100−20	47,000	11.5	14.0	46,000	3.82	7.8	29,400	2.66
3702326	25HBC348A**60	CSPH*6012A**	58ME(B,C)120−20	47,000	11.5	14.0	46,000	3.84	8.0	29,400	2.68
3702313	25HBC348A**60	CSPH*6012A**	58MV(B,C)080−20	47,000	11.5	13.5	46,000	3.68	7.7	29,200	2.60
3702314	25HBC348A**60	CSPH*6012A**	58MV(B,C)100−20	47,000	11.5	13.5	46,000	3.72	7.8	29,600	2.62
3702315	25HBC348A**60	CSPH*6012A**	58MV(B,C)120−20	47,000	11.5	14.0	46,000	3.74	7.8	29,400	2.62
3702320	25HBC348A**60	CSPH*6012A**	58PH*070−16	47,000	11.0	13.0	46,000	3.64	7.7	30,400	2.54
3702321	25HBC348A**60	CSPH*6012A**	58PH*090−16	47,000	11.5	14.0	46,000	3.78	7.8	29,600	2.64
3702322	25HBC348A**60	CSPH*6012A**	58PH*110−20	47,000	11.5	14.0	46,000	3.82	7.8	29,200	2.68
3702323	25HBC348A**60	CSPH*6012A**	58PH*135−20	47,000	11.5	14.0	46,000	3.80	7.8	29,400	2.66
3702361	25HBC348A**60	CSPH*6012A**	58VLR120−20	47,000	11.5	14.0	46,000	3.76	7.7	29,200	2.64
3702360	25HBC348A**60	CSPH*6012A**	58VMR120−20	47,000	11.5	13.5	46,000	3.74	7.8	29,400	2.62
3702312	25HBC348A**60	CSPH*6012A**+TDR		47,000	11.0	13.0	47,500	3.74	7.8	30,400	2.60
3699348	25HBC360(A,W)**30	†FY5BNB060		58,500	10.9	13.0	58,000	3.52	7.7	37,000	2.50
3699411	25HBC360(A,W)**30	FB4CNF060+TXV		58,000	10.8	13.0	57,500	3.48	7.7	36,200	2.50
3699372	25HBC360(A,W)**30	FE4ANB006+UI		59,500	11.2	13.5	57,000	3.68	8.0	36,000	2.62
3699373	25HBC360(A,W)**30	FV4BNB006		59,500	11.5	14.0	57,000	3.68	8.0	36,000	2.62
3699374	25HBC360(A,W)**30	FX4CN(B,F)048		57,500	11.0	13.0	57,500	3.48	7.7	36,400	2.50
3699385	25HBC360(A,W)**30	FX4CN(B,F)060		59,000	11.2	13.5	57,500	3.66	7.7	36,200	2.60
3699412	25HBC360(A,W)**30	FX4DN(B,F)061		59,000	11.5	13.5	57,000	3.68	7.8	36,000	2.62
3699349	25HBC360(A,W)**30	FY4ANB060		58,500	10.8	13.0	58,000	3.54	7.7	37,000	2.50
3699352	25HBC360(A,W)**30	CAP**6021A**	58CV(A,X)110−20	58,000	11.0	13.2	57,500	3.52	7.7	36,400	2.52
3699386	25HBC360(A,W)**30	CAP**6021A**	58ME(B,C)100−20	58,000	11.0	13.0	57,000	3.52	7.7	36,000	2.52
3699351	25HBC360(A,W)**30	CAP**6021A**	58MV(B,C)100−20	57,500	10.8	13.0	57,500	3.46	7.7	36,600	2.48
3699375	25HBC360(A,W)**30	CAP**6021A**	58PH*090−16	58,000	11.0	13.0	57,000	3.50	7.7	36,200	2.52
3699376	25HBC360(A,W)**30	CAP**6021A**	58PH*110−20	58,500	11.0	13.5	57,000	3.56	7.7	36,200	2.54
3699480	25HBC360(A,W)**30	CAP**6021A**	58UVB100−20	57,500	10.8	13.0	57,500	3.46	7.7	36,600	2.48
3699350	25HBC360(A,W)**30	CAP**6021A**+TDR		58,000	10.8	13.0	57,500	3.52	7.7	36,600	2.52
3699355	25HBC360(A,W)**30	CAP**6024A**	58CV(A,X)135−22	58,000	11.0	13.2	57,000	3.54	7.7	36,200	2.54
3699356	25HBC360(A,W)**30	CAP**6024A**	58CV(A,X)155−22	58,500	11.2	13.5	57,000	3.58	7.7	36,000	2.56
3699387	25HBC360(A,W)**30	CAP**6024A**	58ME(B,C)120−20	58,000	11.0	13.5	57,000	3.54	7.7	36,000	2.54
3699354	25HBC360(A,W)**30	CAP**6024A**	58MV(B,C)120−20	57,500	10.8	13.0	57,500	3.46	7.7	36,600	2.48
3699377	25HBC360(A,W)**30	CAP**6024A**	58PH*135−20	58,000	11.0	13.0	57,000	3.50	7.7	36,200	2.52
3699481	25HBC360(A,W)**30	CAP**6024A**	58UVB120−20	57,500	10.8	13.0	57,500	3.46	7.7	36,600	2.48
3699353	25HBC360(A,W)**30	CAP**6024A**+TDR		58,000	10.8	13.0	57,500	3.52	7.7	36,600	2.52
3699410	25HBC360(A,W)**30	CAP**6025A**+TDR		58,000	10.8	13.0	57,500	3.52	7.7	36,600	2.52
3699363	25HBC360(A,W)**30	CNPH*6024A**	58CV(A,X)110−20	58,000	11.0	13.2	57,500	3.46	7.7	36,200	2.52
3699364	25HBC360(A,W)**30	CNPH*6024A**	58CV(A,X)135−22	58,000	11.0	13.2	57,500	3.50	7.7	36,000	2.54
3699365	25HBC360(A,W)**30	CNPH*6024A**	58CV(A,X)155−22	58,000	11.2	13.5	57,500	3.52	7.7	36,000	2.56
3699389	25HBC360(A,W)**30	CNPH*6024A**	58ME(B,C)080−16	57,500	10.5	13.0	57,500	3.38	7.7	36,200	2.48
3699390	25HBC360(A,W)**30	CNPH*6024A**	58ME(B,C)100−20	58,000	11.0	13.0	57,500	3.46	7.7	36,000	2.52
3699391	25HBC360(A,W)**30	CNPH*6024A**	58ME(B,C)120−20	58,000	11.0	13.5	57,000	3.48	7.7	35,800	2.54
3699362	25HBC360(A,W)**30	CNPH*6024A**	58MV(B,C)120−20	57,500	10.8	13.0	58,000	3.42	7.7	36,400	2.48
3699379	25HBC360(A,W)**30	CNPH*6024A**	58PH*090−16	57,500	11.0	13.0	57,500	3.44	7.7	36,200	2.50
3699380	25HBC360(A,W)**30	CNPH*6024A**	58PH*110−20	58,000	11.0	13.5	57,500	3.50	7.7	36,000	2.54
3699381	25HBC360(A,W)**30	CNPH*6024A**	58PH*135−20	58,000	11.0	13.0	57,500	3.46	7.7	36,000	2.52
3699361	25HBC360(A,W)**30	CNPH*6024A**+TDR		58,000	10.8	13.0	58,000	3.46	7.7	36,600	2.50
3699403	25HBC360(A,W)**30	CNPH*6124A**	58CV(A,X)110−20	58,500	11.0	13.0	57,500	3.54	7.7	36,600	2.52
3699404	25HBC360(A,W)**30	CNPH*6124A**	58CV(A,X)135−22	58,500	11.0	13.0	57,000	3.58	7.7	36,200	2.56
3699405	25HBC360(A,W)**30	CNPH*6124A**	58CV(A,X)155−22	58,500	11.2	13.5	57,000	3.62	7.7	36,200	2.58
3699408	25HBC360(A,W)**30	CNPH*6124A**	58ME(B,C)100−20	58,000	11.0	13.0	57,000	3.54	7.7	36,200	2.54
3699409	25HBC360(A,W)**30	CNPH*6124A**	58ME(B,C)120−20	58,500	11.2	13.5	57,000	3.58	7.7	36,000	2.56
3699402	25HBC360(A,W)**30	CNPH*6124A**	58MV(B,C)120−20	58,000	11.0	13.0	57,500	3.52	7.7	36,600	2.50
3699406	25HBC360(A,W)**30	CNPH*6124A**	58PH*110−20	58,500	11.2	13.5	57,000	3.58	7.7	36,200	2.56
3699407	25HBC360(A,W)**30	CNPH*6124A**	58PH*135−20	58,000	11.0	13.0	57,000	3.54	7.7	36,200	2.54
3699401	25HBC360(A,W)**30	CNPH*6124A**+TDR		58,500	11.0	13.0	57,500	3.56	7.7	36,800	2.52
3699359	25HBC360(A,W)**30	CNPV*6024A**	58CV(A,X)135−22	58,000	11.0	13.2	57,500	3.50	7.7	36,000	2.54
3699360	25HBC360(A,W)**30	CNPV*6024A**	58CV(A,X)155−22	58,000	11.2	13.5	57,500	3.52	7.7	36,000	2.56
3699388	25HBC360(A,W)**30	CNPV*6024A**	58ME(B,C)120−20	58,000	11.0	13.5	57,000	3.48	7.7	35,800	2.54
3699358	25HBC360(A,W)**30	CNPV*6024A**	58MV(B,C)120−20	57,500	10.8	13.0	58,000	3.42	7.7	36,400	2.48
3699378	25HBC360(A,W)**30	CNPV*6024A**	58PH*135−20	58,000	11.0	13.0	57,500	3.46	7.7	36,000	2.52

See notes on page 45

COMBINATION RATINGS CONTINUED

AHRI Ref. No.	Model Number	Coil Model Number	Furnace Model Number	Cooling Capacity	EER	SEER	High Temp		HSPF	Low Temp	
							E Capacity	E COP		H Capacity	H COP
3699482	25HBC360(A,W)**30	CNPV*6024A**	58UVB120−20	57,500	10.8	13.0	58,000	3.42	7.7	36,400	2.48
3699357	25HBC360(A,W)**30	CNPV*6024A**+TDR		58,000	10.8	13.0	58,000	3.46	7.7	36,600	2.50
3699397	25HBC360(A,W)**30	CNPV*6124A**	58CV(A,X)135−22	59,000	11.2	13.5	57,500	3.64	7.7	36,200	2.58
3699398	25HBC360(A,W)**30	CNPV*6124A**	58CV(A,X)155−22	59,000	11.2	13.5	57,500	3.68	7.8	36,200	2.60
3699413	25HBC360(A,W)**30	CNPV*6124A**	58HDV100−−20 (DWNFLWONLY)	59,000	10.9	13.0	58,500	3.58	7.7	37,000	2.52
3699400	25HBC360(A,W)**30	CNPV*6124A**	58ME(B,C)120−20	59,000	11.2	13.5	57,500	3.64	7.7	36,000	2.58
3699396	25HBC360(A,W)**30	CNPV*6124A**	58MV(B,C)120−20	58,500	11.0	13.0	58,000	3.58	7.7	36,600	2.54
3699399	25HBC360(A,W)**30	CNPV*6124A**	58PH*135−20	59,000	11.2	13.5	57,500	3.62	7.7	36,200	2.56
3699483	25HBC360(A,W)**30	CNPV*6124A**	58UVB120−20	58,500	11.0	13.0	58,000	3.58	7.7	36,600	2.54
3699395	25HBC360(A,W)**30	CNPV*6124A**+TDR		59,000	11.0	13.0	58,000	3.60	7.7	36,800	2.54
3699369	25HBC360(A,W)**30	CSPH*6012A**	58CV(A,X)110−20	58,500	11.0	13.2	58,000	3.54	7.7	36,400	2.54
3699370	25HBC360(A,W)**30	CSPH*6012A**	58CV(A,X)135−22	58,500	11.2	13.5	57,500	3.58	7.7	36,200	2.56
3699371	25HBC360(A,W)**30	CSPH*6012A**	58CV(A,X)155−22	58,500	11.2	13.5	57,500	3.62	7.7	36,000	2.58
3699392	25HBC360(A,W)**30	CSPH*6012A**	58ME(B,C)080−16	57,500	10.5	13.0	57,500	3.46	7.7	36,200	2.50
3699393	25HBC360(A,W)**30	CSPH*6012A**	58ME(B,C)100−20	58,000	11.0	13.5	57,500	3.54	7.7	36,200	2.54
3699394	25HBC360(A,W)**30	CSPH*6012A**	58ME(B,C)120−20	58,500	11.0	13.5	57,500	3.58	7.8	36,000	2.56
3699367	25HBC360(A,W)**30	CSPH*6012A**	58MV(B,C)100−20	58,000	10.8	13.0	58,000	3.48	7.7	36,600	2.50
3699368	25HBC360(A,W)**30	CSPH*6012A**	58MV(B,C)120−20	58,000	10.8	13.0	58,000	3.50	7.7	36,400	2.50
3699382	25HBC360(A,W)**30	CSPH*6012A**	58PH*090−16	58,000	11.0	13.0	57,500	3.52	7.7	36,200	2.52
3699383	25HBC360(A,W)**30	CSPH*6012A**	58PH*110−20	58,500	11.0	13.5	57,500	3.60	7.7	36,200	2.56
3699384	25HBC360(A,W)**30	CSPH*6012A**	58PH*135−20	58,500	11.0	13.0	57,500	3.56	7.7	36,200	2.54
3699366	25HBC360(A,W)**30	CSPH*6012A**+TDR		58,500	10.8	13.0	58,000	3.54	7.7	36,600	2.52
3702392	25HBC360A**50	†FY5BNB060		58,500	10.9	13.0	58,000	3.52	7.7	37,000	2.50
3702177	25HBC360A**50	FB4CNF060+TXV		58,000	10.8	13.0	57,500	3.48	7.7	36,200	2.50
3702457	25HBC360A**50	FE4ANB006+UI		59,500	11.2	13.5	57,000	3.68	8.0	36,000	2.62
3702458	25HBC360A**50	FV4BNB006		59,500	11.5	14.0	57,000	3.68	8.0	36,000	2.62
3702130	25HBC360A**50	FX4CN(B,F)048		57,500	11.0	13.0	57,500	3.48	7.7	36,400	2.50
3702430	25HBC360A**50	FX4CN(B,F)060		59,000	11.2	13.5	57,500	3.66	7.7	36,200	2.60
3702436	25HBC360A**50	FX4DN(B,F)061		59,000	11.5	13.5	57,000	3.68	7.8	36,000	2.62
3702393	25HBC360A**50	FY4ANB060		58,500	10.8	13.0	58,000	3.54	7.7	37,000	2.50
3702149	25HBC360A**50	CAP**6021A**	58CV(A,X)110−20	58,000	11.0	13.2	57,500	3.52	7.7	36,400	2.52
3702167	25HBC360A**50	CAP**6021A**	58ME(B,C)100−20	58,000	11.0	13.0	57,000	3.52	7.7	36,000	2.52
3702126	25HBC360A**50	CAP**6021A**	58MV(B,C)100−20	57,500	10.8	13.0	57,500	3.46	7.7	36,600	2.48
3702161	25HBC360A**50	CAP**6021A**	58PH*090−16	58,000	11.0	13.0	57,000	3.50	7.7	36,200	2.52
3702399	25HBC360A**50	CAP**6021A**	58PH*110−20	58,500	11.0	13.5	57,000	3.56	7.7	36,200	2.54
3702134	25HBC360A**50	CAP**6021A**	58UVB100−20	57,500	10.8	13.0	57,500	3.46	7.7	36,600	2.48
3702151	25HBC360A**50	CAP**6024A**	58CV(A,X)135−22	58,000	11.0	13.2	57,000	3.54	7.7	36,200	2.54
3702394	25HBC360A**50	CAP**6024A**	58CV(A,X)155−22	58,500	11.2	13.5	57,000	3.58	7.7	36,000	2.56
3702168	25HBC360A**50	CAP**6024A**	58ME(B,C)120−20	58,000	11.0	13.5	57,000	3.54	7.7	36,000	2.54
3702127	25HBC360A**50	CAP**6024A**	58MV(B,C)120−20	57,500	10.8	13.0	57,500	3.46	7.7	36,600	2.48
3702162	25HBC360A**50	CAP**6024A**	58PH*135−20	58,000	11.0	13.0	57,000	3.50	7.7	36,200	2.52
3702135	25HBC360A**50	CAP**6024A**	58UVB120−20	57,500	10.8	13.0	57,500	3.46	7.7	36,600	2.48
3702150	25HBC360A**50	CAP**6024A**+TDR		58,000	10.8	13.0	57,500	3.52	7.7	36,600	2.52
3702176	25HBC360A**50	CAP**6025A**+TDR		58,000	10.8	13.0	57,500	3.52	7.7	36,600	2.52
3702156	25HBC360A**50	CNPH*6024A**	58CV(A,X)110−20	58,000	11.0	13.2	57,500	3.46	7.7	36,200	2.52
3702157	25HBC360A**50	CNPH*6024A**	58CV(A,X)135−22	58,000	11.0	13.2	57,500	3.50	7.7	36,000	2.54
3702158	25HBC360A**50	CNPH*6024A**	58CV(A,X)155−22	58,000	11.2	13.5	57,500	3.52	7.7	36,000	2.56
3702132	25HBC360A**50	CNPH*6024A**	58ME(B,C)080−16	57,500	10.5	13.0	57,500	3.38	7.7	36,200	2.48
3702170	25HBC360A**50	CNPH*6024A**	58ME(B,C)100−20	58,000	11.0	13.0	57,500	3.46	7.7	36,000	2.52
3702171	25HBC360A**50	CNPH*6024A**	58ME(B,C)120−20	58,000	11.0	13.5	57,000	3.48	7.7	35,800	2.54
3702129	25HBC360A**50	CNPH*6024A**	58MV(B,C)120−20	57,500	10.8	13.0	58,000	3.42	7.7	36,400	2.48
3702131	25HBC360A**50	CNPH*6024A**	58PH*090−16	57,500	11.0	13.0	57,500	3.44	7.7	36,200	2.50
3702164	25HBC360A**50	CNPH*6024A**	58PH*110−20	58,000	11.0	13.5	57,500	3.50	7.7	36,000	2.54
3702165	25HBC360A**50	CNPH*6024A**	58PH*135−20	58,000	11.0	13.0	57,500	3.46	7.7	36,000	2.52
3702155	25HBC360A**50	CNPH*6024A**+TDR		58,000	10.8	13.0	58,000	3.46	7.7	36,600	2.50
3702405	25HBC360A**50	CNPH*6124A**	58CV(A,X)110−20	58,500	11.0	13.0	57,500	3.54	7.7	36,600	2.52
3702406	25HBC360A**50	CNPH*6124A**	58CV(A,X)135−22	58,500	11.0	13.0	57,000	3.58	7.7	36,200	2.56
3702407	25HBC360A**50	CNPH*6124A**	58CV(A,X)155−22	58,500	11.2	13.5	57,000	3.62	7.7	36,200	2.58
3702175	25HBC360A**50	CNPH*6124A**	58ME(B,C)100−20	58,000	11.0	13.0	57,000	3.54	7.7	36,200	2.54
3702409	25HBC360A**50	CNPH*6124A**	58ME(B,C)120−20	58,500	11.2	13.5	57,000	3.58	7.7	36,000	2.56
3702173	25HBC360A**50	CNPH*6124A**	58MV(B,C)120−20	58,000	11.0	13.0	57,500	3.52	7.7	36,600	2.50
3702408	25HBC360A**50	CNPH*6124A**	58PH*110−20	58,500	11.2	13.5	57,000	3.58	7.7	36,200	2.56
3702174	25HBC360A**50	CNPH*6124A**	58PH*135−20	58,000	11.0	13.0	57,000	3.54	7.7	36,200	2.54
3702404	25HBC360A**50	CNPH*6124A**+TDR		58,500	11.0	13.0	57,500	3.56	7.7	36,800	2.52
3702153	25HBC360A**50	CNPV*6024A**	58CV(A,X)135−22	58,000	11.0	13.2	57,500	3.50	7.7	36,000	2.54
3702154	25HBC360A**50	CNPV*6024A**	58CV(A,X)155−22	58,000	11.2	13.5	57,500	3.52	7.7	36,000	2.56
3702169	25HBC360A**50	CNPV*6024A**	58ME(B,C)120−20	58,000	11.0	13.5	57,000	3.48	7.7	35,800	2.54
3702128	25HBC360A**50	CNPV*6024A**	58MV(B,C)120−20	57,500	10.8	13.0	58,000	3.42	7.7	36,400	2.48
3702163	25HBC360A**50	CNPV*6024A**	58PH*135−20	58,000	11.0	13.0	57,500	3.46	7.7	36,000	2.52
3702136	25HBC360A**50	CNPV*6024A**	58UVB120−20	57,500	10.8	13.0	58,000	3.42	7.7	36,400	2.48
3702152	25HBC360A**50	CNPV*6024A**+TDR		58,000	10.8	13.0	58,000	3.46	7.7	36,600	2.50
3702432	25HBC360A**50	CNPV*6124A**	58CV(A,X)135−22	59,000	11.2	13.5	57,500	3.64	7.7	36,200	2.58
3702433	25HBC360A**50	CNPV*6124A**	58CV(A,X)155−22	59,000	11.2	13.5	57,500	3.68	7.8	36,200	2.60
3702437	25HBC360A**50	CNPV*6124A**	58HDV100−−20 (DWNFLWONLY)	59,000	10.9	13.0	58,500	3.58	7.7	37,000	2.52
3702435	25HBC360A**50	CNPV*6124A**	58ME(B,C)120−20	59,000	11.2	13.5	57,500	3.64	7.7	36,000	2.58
3702403	25HBC360A**50	CNPV*6124A**	58MV(B,C)120−20	58,500	11.0	13.0	58,000	3.58	7.7	36,600	2.54
3702434	25HBC360A**50	CNPV*6124A**	58PH*135−20	59,000	11.2	13.5	57,500	3.62	7.7	36,200	2.56
3702410	25HBC360A**50	CNPV*6124A**	58UVB120−20	58,500	11.0	13.0	58,000	3.58	7.7	36,600	2.54
3702431	25HBC360A**50	CNPV*6124A**+TDR		59,000	11.0	13.0	58,000	3.60	7.7	36,800	2.54
3702396	25HBC360A**50	CSPH*6012A**	58CV(A,X)110−20	58,500	11.0	13.2	58,000	3.54	7.7	36,400	2.54
3702397	25HBC360A**50	CSPH*6012A**	58CV(A,X)135−22	58,500	11.2	13.5	57,500	3.58	7.7	36,200	2.56
3702398	25HBC360A**50	CSPH*6012A**	58CV(A,X)155−22	58,500	11.2	13.5	57,500	3.62	7.7	36,000	2.58
3702133	25HBC360A**50	CSPH*6012A**	58ME(B,C)080−16	57,500	10.5	13.0	57,500	3.46	7.7	36,200	2.50
3702172	25HBC360A**50	CSPH*6012A**	58ME(B,C)100−20	58,000	11.0	13.5	57,500	3.54	7.7	36,200	2.54

See notes on page 45

COMBINATION RATINGS CONTINUED

AHRI Ref. No.	Model Number	Coil Model Number	Furnace Model Number	Cooling Capacity	EER	SEER	High Temp		HSPF	Low Temp	
							E Capacity	E COP		H Capacity	H COP
3702402	25HBC360A**50	CSPH*6012A**	58ME(B,C)120−20	58,500	11.0	13.5	57,500	3.58	7.8	36,000	2.56
3702159	25HBC360A**50	CSPH*6012A**	58MV(B,C)100−20	58,000	10.8	13.0	58,000	3.48	7.7	36,600	2.50
3702160	25HBC360A**50	CSPH*6012A**	58MV(B,C)120−20	58,000	10.8	13.0	58,000	3.50	7.7	36,400	2.50
3702166	25HBC360A**50	CSPH*6012A**	58PH*090−16	58,000	11.0	13.0	57,500	3.52	7.7	36,200	2.52
3702400	25HBC360A**50	CSPH*6012A**	58PH*110−20	58,500	11.0	13.5	57,500	3.60	7.7	36,200	2.56
3702401	25HBC360A**50	CSPH*6012A**	58PH*135−20	58,500	11.0	13.0	57,500	3.56	7.7	36,200	2.54
3702395	25HBC360A**50	CSPH*6012A**+TDR		58,500	10.8	13.0	58,000	3.54	7.7	36,600	2.52
3702411	25HBC360A**60	†FY5BNB060		58,500	10.9	13.0	58,000	3.52	7.7	37,000	2.50
3702391	25HBC360A**60	FB4CNF060+TXV		58,000	10.8	13.0	57,500	3.48	7.7	36,200	2.50
3702459	25HBC360A**60	FE4ANB006+UI		59,500	11.2	13.5	57,000	3.68	8.0	36,000	2.62
3702460	25HBC360A**60	FV4BNB006		59,500	11.5	14.0	57,000	3.68	8.0	36,000	2.62
3702141	25HBC360A**60	FX4CN(B,F)048		57,500	11.0	13.0	57,500	3.48	7.7	36,400	2.50
3702438	25HBC360A**60	FX4CN(B,F)060		59,000	11.2	13.5	57,500	3.66	7.7	36,200	2.60
3702444	25HBC360A**60	FX4DN(B,F)061		59,000	11.5	13.5	57,000	3.68	7.8	36,000	2.62
3702412	25HBC360A**60	FY4ANB060		58,500	10.8	13.0	58,000	3.54	7.7	37,000	2.50
3702363	25HBC360A**60	CAP**6021A**	58CV(A,X)110−20	58,000	11.0	13.2	57,500	3.52	7.7	36,400	2.52
3702381	25HBC360A**60	CAP**6021A**	58ME(B,C)100−20	58,000	11.0	13.0	57,000	3.52	7.7	36,000	2.52
3702137	25HBC360A**60	CAP**6021A**	58MV(B,C)100−20	57,500	10.8	13.0	57,500	3.46	7.7	36,600	2.48
3702375	25HBC360A**60	CAP**6021A**	58PH*090−16	58,000	11.0	13.0	57,000	3.50	7.7	36,200	2.52
3702418	25HBC360A**60	CAP**6021A**	58PH*110−20	58,500	11.0	13.5	57,000	3.56	7.7	36,200	2.54
3702145	25HBC360A**60	CAP**6021A**	58UVB100−20	57,500	10.8	13.0	57,500	3.46	7.7	36,600	2.48
3702362	25HBC360A**60	CAP**6021A**+TDR		58,000	10.8	13.0	57,500	3.52	7.7	36,600	2.52
3702365	25HBC360A**60	CAP**6024A**	58CV(A,X)135−22	58,000	11.0	13.2	57,000	3.54	7.7	36,200	2.54
3702413	25HBC360A**60	CAP**6024A**	58CV(A,X)155−22	58,500	11.2	13.5	57,000	3.58	7.7	36,000	2.56
3702382	25HBC360A**60	CAP**6024A**	58ME(B,C)120−20	58,000	11.0	13.5	57,000	3.54	7.7	36,000	2.54
3702138	25HBC360A**60	CAP**6024A**	58MV(B,C)120−20	57,500	10.8	13.0	57,500	3.46	7.7	36,600	2.48
3702376	25HBC360A**60	CAP**6024A**	58PH*135−20	58,000	11.0	13.0	57,000	3.50	7.7	36,200	2.52
3702146	25HBC360A**60	CAP**6024A**	58UVB120−20	57,500	10.8	13.0	57,500	3.46	7.7	36,600	2.48
3702364	25HBC360A**60	CAP**6024A**+TDR		58,000	10.8	13.0	57,500	3.52	7.7	36,600	2.52
3702390	25HBC360A**60	CAP**6025A**+TDR		58,000	10.8	13.0	57,500	3.52	7.7	36,600	2.52
3702370	25HBC360A**60	CNPH*6024A**	58CV(A,X)110−20	58,000	11.0	13.2	57,500	3.46	7.7	36,200	2.52
3702371	25HBC360A**60	CNPH*6024A**	58CV(A,X)135−22	58,000	11.0	13.2	57,500	3.50	7.7	36,000	2.54
3702372	25HBC360A**60	CNPH*6024A**	58CV(A,X)155−22	58,000	11.2	13.5	57,500	3.52	7.7	36,000	2.56
3702143	25HBC360A**60	CNPH*6024A**	58ME(B,C)080−16	57,500	10.5	13.0	57,500	3.38	7.7	36,200	2.48
3702384	25HBC360A**60	CNPH*6024A**	58ME(B,C)100−20	58,000	11.0	13.0	57,500	3.46	7.7	36,000	2.52
3702385	25HBC360A**60	CNPH*6024A**	58ME(B,C)120−20	58,000	11.0	13.5	57,000	3.48	7.7	35,800	2.54
3702140	25HBC360A**60	CNPH*6024A**	58MV(B,C)120−20	57,500	10.8	13.0	58,000	3.42	7.7	36,400	2.48
3702142	25HBC360A**60	CNPH*6024A**	58PH*090−16	57,500	11.0	13.0	57,500	3.44	7.7	36,200	2.50
3702378	25HBC360A**60	CNPH*6024A**	58PH*110−20	58,000	11.0	13.5	57,500	3.50	7.7	36,000	2.54
3702379	25HBC360A**60	CNPH*6024A**	58PH*135−20	58,000	11.0	13.0	57,500	3.46	7.7	36,000	2.52
3702369	25HBC360A**60	CNPH*6024A**+TDR		58,000	10.8	13.0	58,000	3.46	7.7	36,600	2.50
3702424	25HBC360A**60	CNPH*6124A**	58CV(A,X)110−20	58,500	11.0	13.0	57,500	3.54	7.7	36,600	2.52
3702425	25HBC360A**60	CNPH*6124A**	58CV(A,X)135−22	58,500	11.0	13.0	57,000	3.58	7.7	36,200	2.56
3702426	25HBC360A**60	CNPH*6124A**	58CV(A,X)155−22	58,500	11.2	13.5	57,000	3.62	7.7	36,200	2.58
3702389	25HBC360A**60	CNPH*6124A**	58ME(B,C)100−20	58,000	11.0	13.0	57,000	3.54	7.7	36,200	2.54
3702428	25HBC360A**60	CNPH*6124A**	58ME(B,C)120−20	58,500	11.2	13.5	57,000	3.58	7.7	36,000	2.56
3702387	25HBC360A**60	CNPH*6124A**	58MV(B,C)120−20	58,000	11.0	13.0	57,500	3.52	7.7	36,600	2.50
3702427	25HBC360A**60	CNPH*6124A**	58PH*110−20	58,500	11.2	13.5	57,000	3.58	7.7	36,200	2.56
3702388	25HBC360A**60	CNPH*6124A**	58PH*135−20	58,000	11.0	13.0	57,000	3.54	7.7	36,200	2.54
3702423	25HBC360A**60	CNPH*6124A**+TDR		58,500	11.0	13.0	57,500	3.56	7.7	36,800	2.52
3702367	25HBC360A**60	CNPV*6024A**	58CV(A,X)135−22	58,000	11.0	13.2	57,500	3.50	7.7	36,000	2.54
3702368	25HBC360A**60	CNPV*6024A**	58CV(A,X)155−22	58,000	11.2	13.5	57,500	3.52	7.7	36,000	2.56
3702383	25HBC360A**60	CNPV*6024A**	58ME(B,C)120−20	58,000	11.0	13.5	57,000	3.48	7.7	35,800	2.54
3702139	25HBC360A**60	CNPV*6024A**	58MV(B,C)120−20	57,500	10.8	13.0	58,000	3.42	7.7	36,400	2.48
3702377	25HBC360A**60	CNPV*6024A**	58PH*135−20	58,000	11.0	13.0	57,500	3.46	7.7	36,000	2.52
3702147	25HBC360A**60	CNPV*6024A**	58UVB120−20	57,500	10.8	13.0	58,000	3.42	7.7	36,400	2.48
3702366	25HBC360A**60	CNPV*6024A**+TDR		58,000	10.8	13.0	58,000	3.46	7.7	36,600	2.50
3702440	25HBC360A**60	CNPV*6124A**	58CV(A,X)135−22	59,000	11.2	13.5	57,500	3.64	7.7	36,200	2.58
3702441	25HBC360A**60	CNPV*6124A**	58CV(A,X)155−22	59,000	11.2	13.5	57,500	3.68	7.8	36,200	2.60
3702445	25HBC360A**60	CNPV*6124A**	58HDV100−−20 (DWNFLWONLY)	59,000	10.9	13.0	58,500	3.58	7.7	37,000	2.52
3702443	25HBC360A**60	CNPV*6124A**	58ME(B,C)120−20	59,000	11.2	13.5	57,500	3.64	7.7	36,000	2.58
3702422	25HBC360A**60	CNPV*6124A**	58MV(B,C)120−20	58,500	11.0	13.0	58,000	3.58	7.7	36,600	2.54
3702442	25HBC360A**60	CNPV*6124A**	58PH*135−20	59,000	11.2	13.5	57,500	3.62	7.7	36,200	2.56
3702429	25HBC360A**60	CNPV*6124A**	58UVB120−20	58,500	11.0	13.0	58,000	3.58	7.7	36,600	2.54
3702439	25HBC360A**60	CNPV*6124A**+TDR		59,000	11.0	13.0	58,000	3.60	7.7	36,800	2.54
3702415	25HBC360A**60	CSPH*6012A**	58CV(A,X)110−20	58,500	11.0	13.2	58,000	3.54	7.7	36,400	2.54
3702416	25HBC360A**60	CSPH*6012A**	58CV(A,X)135−22	58,500	11.2	13.5	57,500	3.58	7.7	36,200	2.56
3702417	25HBC360A**60	CSPH*6012A**	58CV(A,X)155−22	58,500	11.2	13.5	57,500	3.62	7.7	36,000	2.58
3702144	25HBC360A**60	CSPH*6012A**	58ME(B,C)080−16	57,500	10.5	13.0	57,500	3.46	7.7	36,200	2.50
3702386	25HBC360A**60	CSPH*6012A**	58ME(B,C)100−20	58,000	11.0	13.5	57,500	3.54	7.7	36,200	2.54
3702421	25HBC360A**60	CSPH*6012A**	58ME(B,C)120−20	58,500	11.0	13.5	57,500	3.58	7.8	36,000	2.56
3702373	25HBC360A**60	CSPH*6012A**	58MV(B,C)100−20	58,000	10.8	13.0	58,000	3.48	7.7	36,600	2.50
3702374	25HBC360A**60	CSPH*6012A**	58MV(B,C)120−20	58,000	10.8	13.0	58,000	3.50	7.7	36,400	2.50
3702380	25HBC360A**60	CSPH*6012A**	58PH*090−16	58,000	11.0	13.0	57,500	3.52	7.7	36,200	2.52
3702419	25HBC360A**60	CSPH*6012A**	58PH*110−20	58,500	11.0	13.5	57,500	3.60	7.7	36,200	2.56
3702420	25HBC360A**60	CSPH*6012A**	58PH*135−20	58,500	11.0	13.0	57,500	3.56	7.7	36,200	2.54
3702414	25HBC360A**60	CSPH*6012A**+TDR		58,500	10.8	13.0	58,000	3.54	7.7	36,600	2.52

* Ratings are net values reflecting the effects of circulating fan heat. Supplemental electric heat is not included. Ratings are based on:
Cooling Standard: 80°F (27°C) db 67°F (19°C) wb indoor entering air temperature and 95°F (35°C) db air entering outdoor unit.
High−Temp Heating Standard: 70°F (21°C) db indoor entering air temperature and 47°F (8°C) db 43°F (6°C) wb air entering outdoor unit.
Low−Temp Heating Standard: 70°F (21°C) db indoor entering air temperature and 17°F (−8°C) db 15°F (−9°C) wb air entering outdoor unit.
COP — Coefficient of Performance
EER — Energy Efficiency Ratio
HSPF — Heating Seasonal Performance Factor
SEER — Seasonal Energy Efficiency Ratio
TDR — Time−Delay Relay
UI — User Interface

DETAILED COOLING CAPACITIES#

EVAPORATOR AIR		CONDENSER ENTERING AIR TEMPERATURES °F (°C)																	
		75 (23.9)			85 (29.4)			95 (35)			105 (40.6)			115 (46.1)			125 (51.7)		
CFM	EWB °F (°C)	Capacity MBtuh		Total System KW**	Capacity MBtuh		Total System KW**	Capacity MBtuh		Total System KW**	Capacity MBtuh		Total System KW**	Capacity MBtuh		Total System KW**	Capacity MBtuh		Total System KW**
		Total	Sens‡		Total	Sens‡		Total	Sens‡		Total	Sens‡		Total	Sens‡		Total	Sens‡	
25HBC318(A,W)**30 Outdoor Section With FY5BNF018 Indoor Section																			
525	72 (22.2)	21.17	10.81	1.25	20.21	10.48	1.41	19.08	10.07	1.58	17.75	9.56	1.76	16.30	9.03	1.96	14.24	8.30	2.14
	67 (19.4)	19.19	13.30	1.24	18.17	12.90	1.39	17.06	12.43	1.55	15.76	11.90	1.72	13.86	11.14	1.89	12.06	10.43	2.10
	63 (17.2)††	17.63	12.75	1.24	16.69	12.32	1.38	15.56	11.82	1.53	13.86	11.08	1.68	12.27	10.39	1.87	10.55	9.66	2.08
	62 (16.7)	17.25	15.66	1.24	16.34	15.22	1.38	15.16	14.64	1.52	13.73	13.73	1.68	12.56	12.56	1.87	11.29	11.29	2.09
	57 (13.9)	16.57	16.57	1.23	15.86	15.86	1.38	14.86	14.86	1.52	13.70	13.70	1.68	12.53	12.53	1.87	11.26	11.26	2.09
600	72 (22.2)	21.57	11.33	1.28	20.59	10.98	1.43	19.45	10.60	1.60	18.09	10.09	1.79	16.59	9.56	1.99	14.55	8.85	2.17
	67 (19.4)	19.62	14.16	1.27	18.57	13.78	1.42	17.40	13.30	1.58	16.13	12.79	1.75	14.21	12.03	1.92	12.35	11.28	2.13
	63 (17.2)††	18.07	13.60	1.26	17.05	13.14	1.41	15.96	12.66	1.56	14.25	11.92	1.71	12.56	11.19	1.90	10.82	10.42	2.10
	62 (16.7)	17.71	16.84	1.26	16.76	16.35	1.41	15.77	15.77	1.56	14.48	14.48	1.71	13.20	13.20	1.90	11.86	11.86	2.12
	57 (13.9)	17.34	17.34	1.26	16.60	16.60	1.40	15.74	15.74	1.56	14.45	14.45	1.71	13.18	13.18	1.90	11.84	11.84	2.12
675	72 (22.2)	21.86	11.74	1.30	20.87	11.43	1.46	19.71	11.08	1.63	18.36	10.63	1.81	16.80	10.06	2.02	14.79	9.37	2.20
	67 (19.4)	19.93	14.96	1.29	18.88	14.60	1.44	17.67	14.14	1.61	16.37	13.61	1.78	14.48	12.86	1.95	12.58	12.06	2.15
	63 (17.2)††	18.40	14.38	1.28	17.34	13.92	1.43	16.22	13.43	1.59	14.55	12.71	1.74	12.81	11.95	1.92	11.07	11.07	2.13
	62 (16.7)	18.13	17.88	1.28	17.23	17.23	1.43	16.34	16.34	1.59	15.16	15.16	1.75	13.76	13.76	1.93	12.34	12.34	2.15
	57 (13.9)	18.02	18.02	1.28	17.20	17.20	1.43	16.32	16.32	1.59	15.13	15.13	1.75	13.73	13.73	1.93	12.32	12.32	2.15

COOLING INDOOR MODEL	CAPACITY	POWER	FURNACE MODEL
*FY5BNF018	1.00	1.00	
FB4CNF018	1.00	1.00	
FB4CNF018	1.00	0.96	
FB4CNF024	1.00	1.00	
FB4CNF024	1.00	0.96	
FE4ANF002	1.01	0.97	
FF1ENP019	0.99	0.95	
FF1ENP024	0.99	0.99	
FF1ENP025	1.01	0.93	
FF1ENP031	1.01	0.97	
FV4BNF002	1.01	0.97	
FV4CNF002	1.01	0.97	
FX4CNF018	0.99	0.95	
FX4CNF024	1.00	0.96	
FX4DN(B,F)031	1.01	0.97	
FX4DNF019	1.02	0.98	
FX4DNF025	1.02	0.98	
FY5BNF018	1.00	1.00	
FY5BNF024	1.00	1.00	
FY5BNF024	1.00	1.00	
CAP**2414A**	1.00	1.00	
CAP**2417A**	0.99	0.99	
CNPF*2418A**	1.00	1.00	
CNPH*2417A**	1.00	1.00	
CNPV*1917A**	1.00	1.00	
CNPV*2414A**	1.00	1.00	
CNPV*2417A**	1.00	1.00	
CSPH*2412A**	1.00	1.00	
CAP**1814A**	0.98	0.93	58CV(A,X)070–12
CAP**2414A**	1.00	0.96	58CV(A,X)070–12
CNPH*2417A**	1.00	0.96	58CV(A,X)070–12
CNPV*1814A**	0.99	0.95	58CV(A,X)070–12
CNPV*2414A**	1.00	0.96	58CV(A,X)070–12
CSPH*2412A**	1.00	0.96	58CV(A,X)070–12
CAP**2417A**	0.99	0.95	58CV(A,X)090–16
CNPH*2417A**	1.00	0.96	58CV(A,X)090–16
CNPV*1917A**	1.00	0.96	58CV(A,X)090–16

COOLING INDOOR MODEL	CAPACITY	POWER	FURNACE MODEL
CNPV*2417A**	1.00	0.96	58CV(A,X)090–16
CSPH*2412A**	1.00	0.96	58CV(A,X)090–16
CNPH*2417A**	1.02	0.98	58HDV040––12
CSPH*2412A**	1.02	0.98	58HDV040––12
CNPH*2417A**	1.02	0.98	58HDV060––12
CSPH*2412A**	1.02	0.98	58HDV060––12
CAP**2417A**	1.01	0.97	58ME(B,C)060–12
CNPH*2417A**	1.00	0.96	58ME(B,C)060–12
CNPV*1917A**	1.02	0.94	58ME(B,C)060–12
CNPV*2417A**	1.00	0.96	58ME(B,C)060–12
CSPH*2412A**	1.02	0.98	58ME(B,C)060–12
CAP**2417A**	1.02	0.94	58MEB040–12
CNPH*2417A**	1.02	0.98	58MEB040–12
CNPV*1917A**	1.02	0.94	58MEB040–12
CNPV*2417A**	1.02	0.98	58MEB040–12
CSPH*2412A**	1.02	0.98	58MEB040–12
CAP**2417A**	0.99	0.95	58MV(B,C)060–14
CNPH*2417A**	1.00	0.96	58MV(B,C)060–14
CNPV*1917A**	1.00	0.96	58MV(B,C)060–14
CNPV*2417A**	1.00	0.96	58MV(B,C)060–14
CSPH*2412A**	1.00	0.96	58MV(B,C)060–14
CNPH*2417A**	0.98	0.93	58MV(B,C)080–14
CSPH*2412A**	1.00	0.96	58MV(B,C)080–14
CNPH*2417A**	1.00	0.96	58MVB040–14
CSPH*2412A**	1.00	0.96	58MVB040–14
CAP**1814A**	0.99	0.95	58PH*045–08
CAP**2414A**	1.01	0.97	58PH*045–08
CNPH*2417A**	1.01	0.97	58PH*045–08
CNPV*1814A**	1.00	0.96	58PH*045–08
CNPV*2414A**	1.00	0.96	58PH*045–08
CSPH*2412A**	1.01	0.97	58PH*045–08
CAP**2417A**	1.00	0.96	58VLR105–12
CNPH*2417A**	1.00	0.96	58VLR105–12
CNPV*1917A**	1.00	0.92	58VLR105–12
CNPV*2417A**	1.00	0.96	58VLR105–12
CSPH*2412A**	1.00	0.96	58VLR105–12
CAP**2417A**	1.00	0.96	58VMR105–12

COOLING INDOOR MODEL	CAPACITY	POWER	FURNACE MODEL
CNPH*2417A**	1.00	0.96	58VMR105–12
CNPV*1917A**	1.00	0.96	58VMR105–12
CNPV*2417A**	1.00	0.96	58VMR105–12
CSPH*2412A**	1.00	0.96	58VMR105–12

See notes on page 57

DETAILED COOLING CAPACITIES# CONTINUED

EVAPORATOR AIR		CONDENSER ENTERING AIR TEMPERATURES °F (°C)																	
		75 (23.9)			85 (29.4)			95 (35)			105 (40.6)			115 (46.1)			125 (51.7)		
CFM	EWB °F (°C)	Capacity MBtuh		Total System KW**	Capacity MBtuh		Total System KW**	Capacity MBtuh		Total System KW**	Capacity MBtuh		Total System KW**	Capacity MBtuh		Total System KW**	Capacity MBtuh		Total System KW**
		Total	Sens‡		Total	Sens‡		Total	Sens‡		Total	Sens‡		Total	Sens‡		Total	Sens‡	
25HBC324(A,W)**30 Outdoor Section With FY5BNF024 Indoor Section																			
700	72 (22.2)	27.52	14.19	1.69	26.45	13.82	1.89	25.16	13.35	2.10	23.61	12.77	2.34	21.86	12.11	2.60	20.01	11.44	2.88
	67 (19.4)	25.10	17.51	1.65	23.88	17.01	1.84	22.55	16.46	2.05	21.09	15.86	2.28	19.47	15.20	2.53	17.21	14.29	2.76
	63 (17.2)††	23.14	16.83	1.63	21.98	16.30	1.81	20.71	15.73	2.02	19.31	15.10	2.24	17.32	14.23	2.45	15.11	13.27	2.71
	62 (16.7)	22.66	20.63	1.63	21.53	20.08	1.81	20.32	19.48	2.01	18.98	18.79	2.23	17.34	17.34	2.46	15.71	15.71	2.72
	57 (13.9)	21.73	21.73	1.62	20.87	20.87	1.80	19.91	19.91	2.00	18.82	18.82	2.23	17.30	17.30	2.45	15.70	15.70	2.72
800	72 (22.2)	27.99	14.80	1.73	26.94	14.47	1.92	25.63	14.03	2.14	24.08	13.49	2.38	22.25	12.81	2.64	20.35	12.13	2.93
	67 (19.4)	25.62	18.58	1.69	24.43	18.18	1.88	23.00	17.60	2.09	21.50	16.99	2.32	19.84	16.32	2.57	17.74	15.47	2.82
	63 (17.2)††	23.70	17.93	1.67	22.46	17.36	1.85	21.15	16.78	2.05	19.71	16.15	2.28	17.82	15.33	2.50	15.47	14.29	2.74
	62 (16.7)	23.26	22.16	1.66	22.10	21.57	1.84	20.88	20.73	2.05	19.69	19.69	2.28	18.31	18.31	2.52	16.58	16.58	2.77
	57 (13.9)	22.74	22.74	1.66	21.80	21.80	1.84	20.78	20.78	2.05	19.66	19.66	2.28	18.28	18.28	2.52	16.52	16.52	2.77
900	72 (22.2)	28.33	15.33	1.76	27.28	15.04	1.96	25.98	14.65	2.17	24.42	14.13	2.41	22.56	13.48	2.68	20.58	12.78	2.96
	67 (19.4)	26.01	19.60	1.72	24.81	19.23	1.91	23.38	18.69	2.13	21.81	18.06	2.36	20.14	17.37	2.61	18.07	16.53	2.86
	63 (17.2)††	24.11	18.92	1.70	22.84	18.38	1.88	21.49	17.79	2.09	20.01	17.14	2.31	18.21	16.35	2.54	15.86	15.28	2.78
	62 (16.7)	23.79	23.52	1.69	22.63	22.63	1.88	21.55	21.55	2.09	20.39	20.39	2.32	19.05	19.05	2.58	17.31	17.31	2.83
	57 (13.9)	23.60	23.60	1.69	22.59	22.59	1.88	21.53	21.53	2.09	20.36	20.36	2.32	19.02	19.02	2.58	17.30	17.30	2.83

COOLING INDOOR MODEL	CAPACITY	POWER	FURNACE MODEL
*FY5BNF024	1.00	1.00	
FB4CNF024	1.00	1.00	
FB4CNF024	1.00	1.00	
FB4CNF030	1.00	0.96	
FB4CNF030	1.00	0.96	
FE4AN(B,F)003	1.00	0.96	
FE4ANF002	1.00	0.96	
FF1ENP025	1.00	1.00	
FF1ENP031	1.00	0.96	
FF1ENP037	1.01	0.96	
FV4BN(B,F)003	1.00	0.96	
FV4BNF002	1.00	0.96	
FV4CN(B,F)003	1.00	0.96	
FV4CNF002	1.00	0.96	
FX4CNF024	0.99	0.99	
FX4CNF030	1.00	0.96	
FX4DN(B,F)031	1.00	0.96	
FX4DN(B,F)037	1.01	0.96	
FX4DNF025	1.01	0.96	
FY5BNF024	1.00	1.00	
FY5BNF030	0.99	0.99	
CAP**2414A**	0.99	0.99	58CV(A,X)070–12
CAP**3014A**	0.99	0.99	58CV(A,X)070–12
CNPH*2417A**	0.98	0.94	58CV(A,X)070–12
CNPH*3017A**	0.99	0.95	58CV(A,X)070–12
CNPH*3117A**	1.01	0.96	58CV(A,X)070–12
CNPV*2414A**	0.99	0.99	58CV(A,X)070–12
CNPV*3014A**	0.99	0.99	58CV(A,X)070–12
CSPH*2412A**	0.99	0.95	58CV(A,X)070–12
CSPH*3012A**	1.00	0.96	58CV(A,X)070–12
CAP**2417A**	0.99	0.95	58CV(A,X)090–16
CAP**3017A**	0.99	0.95	58CV(A,X)090–16
CNPH*2417A**	0.99	0.95	58CV(A,X)090–16
CNPH*3017A**	1.00	0.96	58CV(A,X)090–16
CNPH*3117A**	1.01	0.96	58CV(A,X)090–16
CNPV*2417A**	0.99	0.99	58CV(A,X)090–16
CNPV*3017A**	1.00	0.96	58CV(A,X)090–16

COOLING INDOOR MODEL	CAPACITY	POWER	FURNACE MODEL
CNPV*3117A**	1.00	0.96	58CV(A,X)090–16
CSPH*2412A**	1.00	0.96	58CV(A,X)090–16
CSPH*3012A**	1.00	0.96	58CV(A,X)090–16
CNPH*2417A**	0.99	0.95	58CV(A,X)110–20
CNPH*3017A**	1.00	0.96	58CV(A,X)110–20
CNPH*3117A**	1.01	0.96	58CV(A,X)110–20
CSPH*2412A**	1.00	0.96	58CV(A,X)110–20
CSPH*3012A**	1.00	0.96	58CV(A,X)110–20
CNPH*2417A**	0.99	0.95	58CV(A,X)135–22
CNPH*3017A**	1.00	0.96	58CV(A,X)135–22
CNPH*3117A**	1.01	0.96	58CV(A,X)135–22
CSPH*2412A**	1.00	0.96	58CV(A,X)135–22
CSPH*3012A**	1.00	0.96	58CV(A,X)135–22
CNPH*2417A**	0.99	0.95	58CV(A,X)155–22
CNPH*3017A**	1.00	0.96	58CV(A,X)155–22
CNPH*3117A**	1.01	0.96	58CV(A,X)155–22
CSPH*2412A**	1.00	0.96	58CV(A,X)155–22
CSPH*3012A**	1.00	0.96	58CV(A,X)155–22
CNPH*2417A**	0.99	0.99	58HDV040––12
CNPH*3017A**	1.00	0.96	58HDV040––12
CNPH*3117A**	1.01	0.96	58HDV040––12
CSPH*2412A**	1.00	1.00	58HDV040––12
CSPH*3012A**	1.00	0.96	58HDV040––12
CNPH*2417A**	1.00	1.00	58HDV060––12
CNPH*3017A**	1.00	0.96	58HDV060––12
CNPH*3117A**	1.01	0.96	58HDV060––12
CSPH*2412A**	1.00	1.00	58HDV060––12
CSPH*3012A**	1.00	0.96	58HDV060––12
CNPH*2417A**	1.00	0.96	58HDV080––20
CNPH*3017A**	1.00	0.96	58HDV080––20
CNPH*3117A**	1.01	0.96	58HDV080––20
CSPH*2412A**	1.00	0.96	58HDV080––20
CSPH*3012A**	1.00	0.96	58HDV080––20
CNPH*2417A**	1.00	0.96	58HDV100––20
CNPH*3017A**	1.00	0.96	58HDV100––20
CNPH*3117A**	1.01	0.96	58HDV100––20
CSPH*2412A**	1.00	0.96	58HDV100––20

COOLING INDOOR MODEL	CAPACITY	POWER	FURNACE MODEL
CSPH*3012A**	1.00	0.96	58HDV100––20
CAP**2417A**	1.00	0.96	58ME(B,C)060–12
CAP**3017A**	1.00	0.96	58ME(B,C)060–12
CNPH*2417A**	1.00	0.96	58ME(B,C)060–12
CNPH*3017A**	1.00	0.96	58ME(B,C)060–12
CNPH*3117A**	1.01	0.92	58ME(B,C)060–12
CNPV*2417A**	1.00	1.00	58ME(B,C)060–12
CNPV*3017A**	1.00	0.96	58ME(B,C)060–12
CNPV*3117A**	1.01	0.92	58ME(B,C)060–12
CSPH*2412A**	1.00	0.96	58ME(B,C)060–12
CSPH*3012A**	1.00	0.96	58ME(B,C)060–12
CAP**2417A**	1.00	0.96	58ME(B,C)080–12
CAP**3017A**	1.00	0.96	58ME(B,C)080–12
CNPH*2417A**	1.00	0.96	58ME(B,C)080–12
CNPH*3017A**	1.00	0.96	58ME(B,C)080–12
CNPH*3117A**	1.01	0.96	58ME(B,C)080–12
CNPV*2417A**	1.00	1.00	58ME(B,C)080–12
CNPV*3017A**	1.00	0.96	58ME(B,C)080–12
CNPV*3117A**	1.00	0.96	58ME(B,C)080–12
CSPH*2412A**	1.00	0.96	58ME(B,C)080–12
CSPH*3012A**	1.00	0.96	58ME(B,C)080–12
CAP**2417A**	1.00	0.96	58MEB040–12
CAP**3017A**	1.00	0.96	58MEB040–12
CNPH*2417A**	1.00	0.96	58MEB040–12
CNPH*3017A**	1.00	0.96	58MEB040–12
CNPH*3117A**	1.01	0.92	58MEB040–12
CNPV*2417A**	1.00	1.00	58MEB040–12
CNPV*3017A**	1.00	0.96	58MEB040–12
CNPV*3117A**	1.01	0.92	58MEB040–12
CSPH*2412A**	1.00	0.96	58MEB040–12
CSPH*3012A**	1.00	0.96	58MEB040–12
CAP**2417A**	1.00	0.96	58MV(B,C)060–14
CAP**3017A**	1.00	0.96	58MV(B,C)060–14
CNPH*2417A**	1.00	0.96	58MV(B,C)060–14
CNPH*3017A**	1.00	0.96	58MV(B,C)060–14
CNPH*3117A**	1.01	0.96	58MV(B,C)060–14
CNPV*2417A**	1.00	1.00	58MV(B,C)060–14

DETAILED COOLING CAPACITIES# CONTINUED

25HBC324(A,W)30 Outdoor Section With FY5BNF024 Indoor Section**

COOLING INDOOR MODEL	CAPACITY	POWER	FURNACE MODEL
CNPV*3017A**	1.00	0.96	58MV(B,C)060–14
CNPV*3117A**	1.00	0.96	58MV(B,C)060–14
CSPH*2412A**	1.00	0.96	58MV(B,C)060–14
CSPH*3012A**	1.00	0.96	58MV(B,C)060–14
CNPH*2417A**	0.99	0.95	58MV(B,C)080–14
CNPH*3017A**	0.99	0.95	58MV(B,C)080–14
CNPH*3117A**	1.01	0.96	58MV(B,C)080–14
CSPH*2412A**	0.99	0.95	58MV(B,C)080–14
CSPH*3012A**	1.00	0.96	58MV(B,C)080–14
CNPH*2417A**	0.99	0.95	58MV(B,C)080–20
CNPH*3017A**	0.99	0.95	58MV(B,C)080–20
CNPH*3117A**	1.00	0.96	58MV(B,C)080–20
CSPH*2412A**	0.99	0.95	58MV(B,C)080–20
CSPH*3012A**	0.99	0.95	58MV(B,C)080–20
CNPH*2417A**	0.99	0.95	58MV(B,C)100–20
CNPH*3017A**	0.99	0.95	58MV(B,C)100–20
CNPH*3117A**	1.01	0.96	58MV(B,C)100–20
CSPH*2412A**	0.99	0.95	58MV(B,C)100–20
CSPH*3012A**	1.00	0.96	58MV(B,C)100–20
CNPH*2417A**	0.99	0.95	58MV(B,C)120–20
CNPH*3017A**	1.00	0.96	58MV(B,C)120–20
CNPH*3117A**	1.01	0.96	58MV(B,C)120–20
CSPH*2412A**	1.00	0.96	58MV(B,C)120–20
CSPH*3012A**	1.00	0.96	58MV(B,C)120–20
CNPH*2417A**	0.99	0.95	58MVB040–14
CNPH*3017A**	1.00	0.96	58MVB040–14
CNPH*3117A**	1.01	0.96	58MVB040–14
CSPH*2412A**	0.99	0.95	58MVB040–14
CSPH*3012A**	1.00	0.96	58MVB040–14
CAP**2414A**	1.00	1.00	58PH*045–08
CAP**3014A**	1.00	1.00	58PH*045–08
CNPH*2417A**	0.99	0.95	58PH*045–08
CNPH*3017A**	1.00	0.96	58PH*045–08
CNPH*3117A**	1.01	0.96	58PH*045–08
CNPV*2414A**	0.99	0.99	58PH*045–08
CNPV*3014A**	1.00	1.00	58PH*045–08
CSPH*2412A**	1.00	0.96	58PH*045–08
CSPH*3012A**	1.00	0.96	58PH*045–08
CAP**2417A**	0.99	0.95	58VLR105–12
CAP**3017A**	0.99	0.95	58VLR105–12
CNPH*2417A**	0.99	0.95	58VLR105–12
CNPH*3017A**	0.99	0.95	58VLR105–12
CNPH*3117A**	1.00	0.96	58VLR105–12
CNPV*2417A**	0.99	0.95	58VLR105–12
CNPV*3017A**	0.99	0.95	58VLR105–12
CNPV*3117A**	1.00	0.96	58VLR105–12
CSPH*2412A**	0.99	0.95	58VLR105–12
CSPH*3012A**	1.00	0.96	58VLR105–12
CAP**2417A**	0.99	0.95	58VMR105–12
CAP**3017A**	0.99	0.95	58VMR105–12
CNPH*2417A**	0.98	0.94	58VMR105–12
CNPH*3017A**	0.99	0.95	58VMR105–12
CNPH*3117A**	1.00	0.96	58VMR105–12
CNPV*2417A**	0.98	0.94	58VMR105–12
CNPV*3017A**	0.99	0.95	58VMR105–12
CNPV*3117A**	1.00	0.96	58VMR105–12
CSPH*2412A**	0.99	0.95	58VMR105–12
CSPH*3012A**	0.99	0.95	58VMR105–12

See notes on page 57

DETAILED COOLING CAPACITIES# CONTINUED

EVAPORATOR AIR		CONDENSER ENTERING AIR TEMPERATURES °F (°C)																	
		75 (23.9)			85 (29.4)			95 (35)			105 (40.6)			115 (46.1)			125 (51.7)		
CFM	EWB °F (°C)	Capacity MBtuh		Total System KW**	Capacity MBtuh		Total System KW**	Capacity MBtuh		Total System KW**	Capacity MBtuh		Total System KW**	Capacity MBtuh		Total System KW**	Capacity MBtuh		Total System KW**
		Total	Sens‡		Total	Sens‡		Total	Sens‡		Total	Sens‡		Total	Sens‡		Total	Sens‡	
25HBC330(A,W)**30 Outdoor Section With FY5BNF030 Indoor Section																			
875	72 (22.2)	36.06	18.60	2.22	34.53	18.03	2.46	32.78	17.35	2.71	30.81	16.63	3.00	28.50	15.73	3.34	25.55	14.65	3.65
	67 (19.4)	32.80	22.79	2.20	31.15	22.11	2.42	29.40	21.37	2.68	27.50	20.56	2.96	24.63	19.38	3.22	21.71	18.19	3.55
	63 (17.2)††	30.25	21.92	2.18	28.72	21.20	2.40	27.06	20.44	2.65	24.47	19.27	2.88	21.84	18.11	3.18	19.10	16.91	3.52
	62 (16.7)	29.60	26.79	2.18	28.11	26.06	2.40	26.50	25.26	2.64	23.93	23.93	2.87	21.84	21.84	3.18	19.84	19.84	3.53
	57 (13.9)	28.19	28.19	2.17	27.05	27.05	2.39	25.73	25.73	2.63	23.69	23.69	2.87	21.80	21.80	3.18	19.80	19.80	3.53
1000	72 (22.2)	36.71	19.41	2.27	35.18	18.87	2.50	33.40	18.20	2.76	31.40	17.49	3.05	29.10	16.65	3.38	26.10	15.55	3.70
	67 (19.4)	33.53	24.21	2.24	31.88	23.55	2.47	30.00	22.80	2.73	28.04	21.99	3.01	25.28	20.87	3.28	22.24	19.63	3.60
	63 (17.2)††	30.99	23.29	2.23	29.35	22.55	2.45	27.62	21.78	2.70	25.17	20.68	2.93	22.37	19.45	3.22	19.56	18.21	3.56
	62 (16.7)	30.36	28.74	2.22	28.81	27.96	2.44	27.19	27.09	2.69	25.05	25.05	2.93	22.98	22.98	3.23	20.85	20.85	3.58
	57 (13.9)	29.49	29.49	2.22	28.26	28.26	2.44	26.93	26.93	2.69	25.00	25.00	2.93	22.93	22.93	3.23	20.81	20.81	3.58
1125	72 (22.2)	37.19	20.08	2.31	35.64	19.58	2.54	33.85	18.97	2.80	31.83	18.28	3.09	29.54	17.51	3.42	26.65	16.46	3.78
	67 (19.4)	34.06	25.49	2.28	32.39	24.90	2.51	30.46	24.17	2.77	28.43	23.34	3.06	25.84	22.28	3.34	22.66	20.96	3.65
	63 (17.2)††	31.53	24.58	2.27	29.84	23.83	2.49	28.05	23.04	2.74	25.79	22.04	2.99	22.82	20.72	3.26	19.94	19.39	3.60
	62 (16.7)	31.03	30.55	2.26	29.45	29.62	2.49	27.91	27.91	2.74	26.35	26.35	3.02	23.98	23.98	3.29	21.72	21.72	3.63
	57 (13.9)	30.57	30.57	2.26	29.28	29.28	2.49	27.87	27.87	2.74	26.31	26.31	3.02	23.94	23.94	3.29	21.68	21.68	3.63

COOLING INDOOR MODEL	CAPACITY	POWER	FURNACE MODEL
*FY5BNF030	1.00	1.00	
FB4CNF030	1.00	1.00	
FB4CNF030	1.00	1.00	
FB4CNF036	1.00	1.00	
FB4CNF036	1.00	1.00	
FE4AN(B,F)003	1.00	0.96	
FE4AN(B,F)005	1.00	0.96	
FE4ANF002	1.00	0.96	
FF1ENP031	1.00	1.00	
FF1ENP037	1.00	1.00	
FV4BN(B,F)003	1.00	0.96	
FV4BN(B,F)005	1.00	0.96	
FV4BNF002	1.00	0.96	
FV4CN(B,F)003	1.00	0.96	
FV4CN(B,F)005	1.00	0.96	
FV4CNF002	1.00	0.96	
FX4CN(B,F)036	1.00	1.00	
FX4CNF030	1.00	1.00	
FX4DN(B,F)031	1.00	0.96	
FX4DN(B,F)037	1.00	0.96	
FY5BNF030	1.00	1.00	
CAP**3014A**	1.00	1.00	58CV(A,X)070–12
CAP**3614A**	1.00	1.00	58CV(A,X)070–12
CNPH*3017A**	1.00	1.00	58CV(A,X)070–12
CNPH*3117A**	1.00	0.96	58CV(A,X)070–12
CNPH*3617A**	1.00	1.00	58CV(A,X)070–12
CNPV*3014A**	1.00	1.00	58CV(A,X)070–12
CSPH*3012A**	1.00	1.00	58CV(A,X)070–12
CSPH*3612A**	1.00	0.96	58CV(A,X)070–12
CAP**3017A**	1.00	0.96	58CV(A,X)090–16
CAP**3617A**	1.00	0.96	58CV(A,X)090–16
CNPH*3017A**	1.00	0.96	58CV(A,X)090–16
CNPH*3117A**	1.00	0.96	58CV(A,X)090–16
CNPH*3617A**	1.00	0.96	58CV(A,X)090–16
CNPV*3017A**	1.00	0.96	58CV(A,X)090–16
CNPV*3117A**	1.00	0.96	58CV(A,X)090–16
CNPV*3617A**	1.00	0.96	58CV(A,X)090–16

COOLING INDOOR MODEL	CAPACITY	POWER	FURNACE MODEL
CNPV*3717A**	1.00	0.96	58CV(A,X)090–16
CSPH*3012A**	1.00	0.96	58CV(A,X)090–16
CSPH*3612A**	1.00	0.96	58CV(A,X)090–16
CAP**3621A**	1.00	0.96	58CV(A,X)110–20
CNPH*3017A**	1.00	0.96	58CV(A,X)110–20
CNPH*3117A**	1.00	0.96	58CV(A,X)110–20
CNPH*3617A**	1.00	0.96	58CV(A,X)110–20
CNPV*3621A**	1.00	0.96	58CV(A,X)110–20
CSPH*3012A**	1.00	0.96	58CV(A,X)110–20
CSPH*3612A**	1.00	0.96	58CV(A,X)110–20
CNPH*3017A**	1.00	0.96	58CV(A,X)135–22
CNPH*3117A**	1.00	0.96	58CV(A,X)135–22
CNPH*3617A**	1.00	0.96	58CV(A,X)135–22
CSPH*3012A**	1.00	0.96	58CV(A,X)135–22
CSPH*3612A**	1.00	0.96	58CV(A,X)135–22
CNPH*3017A**	1.00	0.96	58CV(A,X)155–22
CNPH*3117A**	1.00	0.96	58CV(A,X)155–22
CNPH*3617A**	1.00	0.96	58CV(A,X)155–22
CSPH*3012A**	1.00	0.96	58CV(A,X)155–22
CSPH*3612A**	1.00	0.96	58CV(A,X)155–22
CAP**3619A**	1.00	1.00	58HDV040––12
CNPH*3117A**	1.00	1.00	58HDV040––12
CSPH*3612A**	1.00	1.00	58HDV040––12
CAP**3619A**	1.00	1.00	58HDV060––12
CNPH*3017A**	1.00	1.00	58HDV060––12
CNPH*3117A**	1.00	1.00	58HDV060––12
CNPH*3617A**	1.00	1.00	58HDV060––12
CSPH*3012A**	1.00	1.00	58HDV060––12
CSPH*3612A**	1.00	1.00	58HDV060––12
CNPH*3017A**	1.00	1.00	58HDV080––20
CNPH*3117A**	1.00	0.96	58HDV080––20
CNPH*3617A**	1.00	1.00	58HDV080––20
CSPH*3012A**	1.00	1.00	58HDV080––20
CSPH*3612A**	1.00	0.96	58HDV080––20
CNPH*3017A**	1.00	0.96	58HDV100––20
CNPH*3117A**	1.00	0.96	58HDV100––20
CNPH*3617A**	1.00	0.96	58HDV100––20

COOLING INDOOR MODEL	CAPACITY	POWER	FURNACE MODEL
CSPH*3012A**	1.00	0.96	58HDV100––20
CSPH*3612A**	1.00	0.96	58HDV100––20
CAP**3017A**	1.00	0.96	58ME(B,C)060–12
CAP**3617A**	1.00	0.96	58ME(B,C)060–12
CNPH*3017A**	1.00	0.96	58ME(B,C)060–12
CNPH*3117A**	1.00	0.96	58ME(B,C)060–12
CNPH*3617A**	1.00	0.96	58ME(B,C)060–12
CNPV*3017A**	1.00	0.96	58ME(B,C)060–12
CNPV*3117A**	1.00	0.96	58ME(B,C)060–12
CNPV*3617A**	1.00	0.96	58ME(B,C)060–12
CNPV*3717A**	1.00	0.96	58ME(B,C)060–12
CSPH*3012A**	1.00	0.96	58ME(B,C)060–12
CSPH*3612A**	1.00	0.96	58ME(B,C)060–12
CAP**3017A**	1.00	0.96	58ME(B,C)080–12
CAP**3617A**	1.00	0.96	58ME(B,C)080–12
CNPH*3017A**	1.00	0.96	58ME(B,C)080–12
CNPH*3117A**	1.00	0.96	58ME(B,C)080–12
CNPH*3617A**	1.00	0.96	58ME(B,C)080–12
CNPV*3017A**	1.00	0.96	58ME(B,C)080–12
CNPV*3117A**	1.00	0.96	58ME(B,C)080–12
CNPV*3617A**	1.00	0.96	58ME(B,C)080–12
CNPV*3717A**	1.00	0.96	58ME(B,C)080–12
CSPH*3012A**	1.00	0.96	58ME(B,C)080–12
CSPH*3612A**	1.00	0.96	58ME(B,C)080–12
CAP**3017A**	1.00	0.96	58ME(B,C)080–16
CAP**3617A**	1.00	0.96	58ME(B,C)080–16
CNPH*3017A**	1.00	0.96	58ME(B,C)080–16
CNPH*3117A**	1.00	0.96	58ME(B,C)080–16
CNPH*3617A**	1.00	0.96	58ME(B,C)080–16
CNPV*3017A**	1.00	0.96	58ME(B,C)080–16
CNPV*3117A**	1.00	0.96	58ME(B,C)080–16
CNPV*3617A**	1.00	0.96	58ME(B,C)080–16
CNPV*3717A**	1.00	0.96	58ME(B,C)080–16
CSPH*3012A**	1.00	0.96	58ME(B,C)080–16
CSPH*3612A**	1.00	0.96	58ME(B,C)080–16
CAP**3017A**	1.00	0.96	58MEB040–12
CAP**3617A**	1.00	0.96	58MEB040–12

DETAILED COOLING CAPACITIES# CONTINUED

25HBC330(A,W)30 Outdoor Section With FY5BNF030 Indoor Section**

COOLING INDOOR MODEL	CAPACITY	POWER	FURNACE MODEL
CNPH*3017A**	1.00	0.96	58MEB040–12
CNPH*3117A**	1.00	0.96	58MEB040–12
CNPH*3617A**	1.00	0.96	58MEB040–12
CNPV*3017A**	1.00	0.96	58MEB040–12
CNPV*3117A**	1.00	0.96	58MEB040–12
CNPV*3617A**	1.00	0.96	58MEB040–12
CNPV*3717A**	1.00	0.96	58MEB040–12
CSPH*3012A**	1.00	0.96	58MEB040–12
CSPH*3612A**	1.00	0.96	58MEB040–12
CAP**3017A**	1.00	1.00	58MV(B,C)060–14
CAP**3617A**	1.00	0.96	58MV(B,C)060–14
CNPH*3017A**	1.00	0.96	58MV(B,C)060–14
CNPH*3117A**	1.00	0.96	58MV(B,C)060–14
CNPH*3617A**	1.00	0.96	58MV(B,C)060–14
CNPV*3017A**	1.00	0.96	58MV(B,C)060–14
CNPV*3117A**	1.00	0.96	58MV(B,C)060–14
CNPV*3617A**	1.00	0.96	58MV(B,C)060–14
CNPV*3717A**	1.00	0.96	58MV(B,C)060–14
CSPH*3012A**	1.00	0.96	58MV(B,C)060–14
CSPH*3612A**	1.00	0.96	58MV(B,C)060–14
CAP**3621A**	1.00	0.96	58MV(B,C)080–14
CNPH*3017A**	1.00	1.00	58MV(B,C)080–14
CNPH*3117A**	1.00	0.96	58MV(B,C)080–14
CNPH*3617A**	1.00	1.00	58MV(B,C)080–14
CNPV*3621A**	1.00	1.00	58MV(B,C)080–14
CSPH*3012A**	1.00	1.00	58MV(B,C)080–14
CSPH*3612A**	1.00	0.96	58MV(B,C)080–14
CAP**3621A**	1.00	0.96	58MV(B,C)080–20
CNPH*3017A**	1.00	1.00	58MV(B,C)080–20
CNPH*3117A**	1.00	0.96	58MV(B,C)080–20
CNPH*3617A**	1.00	1.00	58MV(B,C)080–20
CNPV*3621A**	1.00	1.00	58MV(B,C)080–20
CSPH*3012A**	1.00	1.00	58MV(B,C)080–20
CSPH*3612A**	1.00	0.96	58MV(B,C)080–20
CAP**3621A**	1.00	1.00	58MV(B,C)100–20
CNPH*3117A**	1.00	0.96	58MV(B,C)100–20
CSPH*3612A**	1.00	0.96	58MV(B,C)100–20
CNPH*3017A**	1.00	0.96	58MV(B,C)120–20
CNPH*3117A**	1.00	0.96	58MV(B,C)120–20
CNPH*3617A**	1.00	0.96	58MV(B,C)120–20
CSPH*3012A**	1.00	0.96	58MV(B,C)120–20
CSPH*3612A**	1.00	0.96	58MV(B,C)120–20
CNPH*3017A**	1.00	1.00	58MVB040–14
CNPH*3117A**	1.00	0.96	58MVB040–14
CNPH*3617A**	1.00	1.00	58MVB040–14
CSPH*3012A**	1.00	1.00	58MVB040–14
CSPH*3612A**	1.00	0.96	58MVB040–14
CAP**3017A**	1.00	1.00	58PH*070–16
CAP**3617A**	1.00	1.00	58PH*070–16
CNPH*3017A**	1.00	1.00	58PH*070–16
CNPH*3117A**	1.00	0.96	58PH*070–16
CNPH*3617A**	1.00	1.00	58PH*070–16
CNPV*3017A**	1.00	1.00	58PH*070–16
CNPV*3117A**	1.00	0.96	58PH*070–16
CNPV*3617A**	1.00	1.00	58PH*070–16
CNPV*3717A**	1.00	0.96	58PH*070–16
CSPH*3012A**	1.00	1.00	58PH*070–16
CSPH*3612A**	1.00	0.96	58PH*070–16
CAP**3621A**	1.00	0.96	58PH*090–16

COOLING INDOOR MODEL	CAPACITY	POWER	FURNACE MODEL
CNPH*3017A**	1.00	0.96	58PH*090–16
CNPH*3117A**	1.00	0.96	58PH*090–16
CNPH*3617A**	1.00	1.00	58PH*090–16
CNPV*3621A**	1.00	1.00	58PH*090–16
CSPH*3012A**	1.00	0.96	58PH*090–16
CSPH*3612A**	1.00	0.96	58PH*090–16
CAP**3017A**	1.00	1.00	58VLR105–12
CAP**3617A**	1.00	1.00	58VLR105–12
CNPH*3017A**	1.00	1.00	58VLR105–12
CNPH*3117A**	1.00	0.96	58VLR105–12
CNPH*3617A**	1.00	1.00	58VLR105–12
CNPV*3017A**	1.00	1.00	58VLR105–12
CNPV*3117A**	1.00	0.96	58VLR105–12
CNPV*3617A**	1.00	1.00	58VLR105–12
CNPV*3717A**	1.00	0.96	58VLR105–12
CSPH*3012A**	1.00	1.00	58VLR105–12
CSPH*3612A**	1.00	0.96	58VLR105–12
CAP**3617A**	0.99	0.99	58VMR105–12
CNPH*3117A**	1.00	0.96	58VMR105–12
CNPV*3117A**	1.00	0.96	58VMR105–12
CNPV*3717A**	1.00	0.96	58VMR105–12
CSPH*3612A**	1.00	0.96	58VMR105–12

See notes on page 57

DETAILED COOLING CAPACITIES# CONTINUED

EVAPORATOR AIR		CONDENSER ENTERING AIR TEMPERATURES °F (°C)																	
		75 (23.9)			85 (29.4)			95 (35)			105 (40.6)			115 (46.1)			125 (51.7)		
CFM	EWB °F (°C)	Capacity MBtuh		Total System KW**	Capacity MBtuh		Total System KW**	Capacity MBtuh		Total System KW**	Capacity MBtuh		Total System KW**	Capacity MBtuh		Total System KW**	Capacity MBtuh		Total System KW**
		Total	Sens‡		Total	Sens‡		Total	Sens‡		Total	Sens‡		Total	Sens‡		Total	Sens‡	
25HBC336(A,W)**30 Outdoor Section With FY5BNF036 Indoor Section																			
1050	72 (22.2)	41.10	21.11	2.52	39.35	20.50	2.78	37.35	19.78	3.07	35.10	19.00	3.40	32.29	17.99	3.78	28.46	16.65	4.12
	67 (19.4)	37.43	26.32	2.49	35.48	25.55	2.74	33.43	24.72	3.04	31.17	23.82	3.35	27.51	22.36	3.64	24.14	21.02	4.03
	63 (17.2)††	34.46	25.23	2.46	32.69	24.44	2.72	30.71	23.58	2.99	27.39	22.15	3.25	24.38	20.86	3.60	21.17	19.46	3.99
	62 (16.7)	33.79	31.16	2.46	32.10	30.31	2.71	30.18	29.30	2.98	27.43	27.43	3.26	25.19	25.19	3.61	22.78	22.78	4.01
	57 (13.9)	32.83	32.83	2.45	31.47	31.47	2.70	29.70	29.70	2.97	27.39	27.39	3.26	25.14	25.14	3.61	22.74	22.74	4.01
1200	72 (22.2)	41.70	22.01	2.57	39.95	21.44	2.83	37.92	20.74	3.12	35.66	19.98	3.45	32.93	19.09	3.83	28.92	17.68	4.18
	67 (19.4)	38.12	27.94	2.54	36.18	27.23	2.80	34.00	26.40	3.09	31.70	25.49	3.41	28.11	24.06	3.71	24.64	22.64	4.09
	63 (17.2)††	35.16	26.82	2.52	33.27	26.00	2.77	31.27	25.14	3.05	28.05	23.76	3.31	24.91	22.39	3.65	21.66	20.87	4.04
	62 (16.7)	34.60	33.32	2.51	32.83	32.83	2.77	31.20	31.20	3.05	28.82	28.82	3.33	26.36	26.36	3.67	23.85	23.85	4.08
	57 (13.9)	34.19	34.19	2.51	32.75	32.75	2.77	31.16	31.16	3.05	28.77	28.77	3.33	26.33	26.33	3.67	23.81	23.81	4.08
1350	72 (22.2)	42.16	22.84	2.62	40.40	22.28	2.88	38.35	21.64	3.18	36.06	20.91	3.51	33.36	20.08	3.88	29.34	18.70	4.24
	67 (19.4)	38.65	29.45	2.59	36.70	28.82	2.85	34.52	28.05	3.14	32.10	27.08	3.47	28.63	25.67	3.77	25.08	24.09	4.14
	63 (17.2)††	35.73	28.37	2.57	33.75	27.52	2.82	31.70	26.63	3.10	28.61	25.29	3.37	25.34	23.80	3.70	22.19	22.19	4.10
	62 (16.7)	35.43	35.43	2.57	33.85	33.85	2.83	32.19	32.19	3.11	30.13	30.13	3.41	27.40	27.40	3.74	24.72	24.72	4.14
	57 (13.9)	35.33	35.33	2.56	33.81	33.81	2.83	32.15	32.15	3.11	30.06	30.06	3.41	27.36	27.36	3.74	24.69	24.69	4.14

COOLING INDOOR MODEL	CAPACITY	POWER	FURNACE MODEL
*FY5BNF036	1.00	1.00	
FB4CNF036	1.00	1.00	
FB4CNF036	1.00	1.00	
FB4CNF042	1.00	1.00	
FB4CNF042	1.00	0.96	
FE4AN(B,F)003	1.00	0.96	
FE4AN(B,F)005	1.01	0.92	
FE4ANF002	1.00	0.96	
FF1ENP037	1.00	1.00	
FV4BN(B,F)003	1.00	0.96	
FV4BN(B,F)005	1.01	0.92	
FV4BNF002	1.00	0.96	
FV4CN(B,F)003	1.00	0.96	
FV4CN(B,F)005	1.01	0.92	
FV4CNF002	1.00	0.96	
FX4CN(B,F)036	1.00	0.96	
FX4CN(B,F)042	1.00	0.96	
FX4DN(B,F)037	1.00	0.96	
FX4DN(B,F)043	1.00	0.96	
FY4ANF042	1.00	1.00	
FY5BNF036	1.00	1.00	
FY5BNF042	1.00	1.00	
FY5BNF042	1.00	1.00	
CAP**3614A**	0.99	0.99	
CAP**3617A**	0.99	0.99	
CAP**3619A**	0.99	0.99	
CAP**3621A**	0.99	0.99	
CAP**4221A**	1.00	1.00	
CAP**4224A**	1.00	1.00	
CNPF*3618A**	0.99	0.99	
CNPH*3617A**	0.99	0.99	
CNPH*4221A**	1.00	1.00	
CNPH*4321A**	1.01	1.01	
CNPV*3617A**	0.99	0.99	
CNPV*3621A**	0.99	0.99	
CNPV*3717A**	1.01	1.01	
CNPV*4217A**	1.00	1.00	

COOLING INDOOR MODEL	CAPACITY	POWER	FURNACE MODEL
CNPV*4221A**	1.00	1.00	
CNPV*4324A**	1.01	1.01	
CSPH*3612A**	0.99	0.99	
CSPH*4212A**	1.00	1.00	
CAP**3614A**	0.99	0.95	58CV(A,X)070–12
CNPH*3617A**	0.99	0.95	58CV(A,X)070–12
CNPH*4221A**	1.00	0.96	58CV(A,X)070–12
CNPH*4321A**	1.01	0.96	58CV(A,X)070–12
CSPH*3612A**	0.99	0.95	58CV(A,X)070–12
CSPH*4212A**	1.00	0.96	58CV(A,X)070–12
CAP**3617A**	0.99	0.95	58CV(A,X)090–16
CNPH*3617A**	0.99	0.95	58CV(A,X)090–16
CNPH*4221A**	1.00	0.96	58CV(A,X)090–16
CNPH*4321A**	1.01	0.92	58CV(A,X)090–16
CNPV*3617A**	0.99	0.95	58CV(A,X)090–16
CNPV*3717A**	1.01	0.96	58CV(A,X)090–16
CNPV*4217A**	1.00	0.96	58CV(A,X)090–16
CSPH*3612A**	0.99	0.95	58CV(A,X)090–16
CSPH*4212A**	1.00	0.96	58CV(A,X)090–16
CAP**3621A**	0.99	0.95	58CV(A,X)110–20
CAP**4221A**	1.00	0.96	58CV(A,X)110–20
CNPH*3617A**	0.99	0.95	58CV(A,X)110–20
CNPH*4221A**	1.00	0.96	58CV(A,X)110–20
CNPH*4321A**	1.01	0.92	58CV(A,X)110–20
CNPV*3621A**	0.99	0.95	58CV(A,X)110–20
CNPV*4221A**	1.00	0.96	58CV(A,X)110–20
CSPH*3612A**	0.99	0.95	58CV(A,X)110–20
CSPH*4212A**	1.00	0.96	58CV(A,X)110–20
CAP**4224A**	1.00	0.96	58CV(A,X)135–22
CNPH*3617A**	0.99	0.95	58CV(A,X)135–22
CNPH*4221A**	1.00	0.96	58CV(A,X)135–22
CNPH*4321A**	1.01	0.92	58CV(A,X)135–22
CNPV*4324A**	1.01	0.96	58CV(A,X)135–22
CSPH*3612A**	0.99	0.95	58CV(A,X)135–22
CSPH*4212A**	1.00	0.96	58CV(A,X)135–22
CAP**4224A**	1.00	0.96	58CV(A,X)155–22
CNPH*3617A**	0.99	0.95	58CV(A,X)155–22

COOLING INDOOR MODEL	CAPACITY	POWER	FURNACE MODEL
CNPH*4221A**	1.00	0.96	58CV(A,X)155–22
CNPH*4321A**	1.01	0.92	58CV(A,X)155–22
CNPV*4324A**	1.01	0.96	58CV(A,X)155–22
CSPH*3612A**	0.99	0.95	58CV(A,X)155–22
CSPH*4212A**	1.00	0.96	58CV(A,X)155–22
CAP**3619A**	0.99	0.99	58HDV040––12
CNPH*3617A**	0.99	0.99	58HDV040––12
CNPH*4221A**	1.00	1.00	58HDV040––12
CNPH*4321A**	1.00	0.96	58HDV040––12
CSPH*3612A**	0.99	0.99	58HDV040––12
CSPH*4212A**	1.00	1.00	58HDV040––12
CAP**3619A**	0.99	0.95	58HDV060––12
CNPH*3617A**	0.99	0.99	58HDV060––12
CNPH*4221A**	1.00	1.00	58HDV060––12
CNPH*4321A**	1.00	0.96	58HDV060––12
CSPH*3612A**	0.99	0.95	58HDV060––12
CSPH*4212A**	1.00	0.96	58HDV060––12
CNPH*3617A**	0.99	0.95	58HDV080––20
CNPH*4221A**	1.00	0.96	58HDV080––20
CNPH*4321A**	1.00	0.96	58HDV080––20
CSPH*3612A**	0.99	0.95	58HDV080––20
CSPH*4212A**	1.00	0.96	58HDV080––20
CAP**4224A**	1.00	0.96	58HDV100––20
CNPH*3617A**	0.99	0.95	58HDV100––20
CNPH*4221A**	1.00	0.96	58HDV100––20
CNPH*4321A**	1.00	0.96	58HDV100––20
CNPV*4324A**	1.01	0.96	58HDV100––20
CSPH*3612A**	0.99	0.95	58HDV100––20
CSPH*4212A**	1.00	0.96	58HDV100––20
CAP**3617A**	0.99	0.95	58ME(B,C)060–12
CNPH*3617A**	0.99	0.95	58ME(B,C)060–12
CNPH*4221A**	1.00	0.96	58ME(B,C)060–12
CNPH*4321A**	1.01	0.92	58ME(B,C)060–12
CNPV*3617A**	0.99	0.95	58ME(B,C)060–12
CNPV*3717A**	1.01	0.96	58ME(B,C)060–12
CNPV*4217A**	1.00	0.96	58ME(B,C)060–12
CSPH*3612A**	0.99	0.95	58ME(B,C)060–12

DETAILED COOLING CAPACITIES# CONTINUED

25HBC336(A,W)30 Outdoor Section With FY5BNF036 Indoor Section**

COOLING INDOOR MODEL	CAPACITY	POWER	FURNACE MODEL
CSPH*4212A**	1.00	0.96	58ME(B,C)060–12
CAP**3617A**	0.99	0.95	58ME(B,C)080–12
CNPH*3617A**	0.99	0.95	58ME(B,C)080–12
CNPH*4221A**	1.00	0.96	58ME(B,C)080–12
CNPH*4321A**	1.01	0.92	58ME(B,C)080–12
CNPV*3617A**	0.99	0.95	58ME(B,C)080–12
CNPV*3717A**	1.01	0.96	58ME(B,C)080–12
CNPV*4217A**	1.00	0.96	58ME(B,C)080–12
CSPH*3612A**	0.99	0.95	58ME(B,C)080–12
CSPH*4212A**	1.00	0.96	58ME(B,C)080–12
CAP**3617A**	0.99	0.95	58ME(B,C)080–16
CNPH*3617A**	0.99	0.95	58ME(B,C)080–16
CNPH*4221A**	1.00	0.96	58ME(B,C)080–16
CNPH*4321A**	1.01	0.92	58ME(B,C)080–16
CNPV*3617A**	0.99	0.95	58ME(B,C)080–16
CNPV*3717A**	1.01	0.96	58ME(B,C)080–16
CNPV*4217A**	1.00	0.96	58ME(B,C)080–16
CSPH*3612A**	0.99	0.95	58ME(B,C)080–16
CSPH*4212A**	1.00	0.96	58ME(B,C)080–16
CAP**3621A**	0.99	0.95	58ME(B,C)100–20
CAP**4221A**	1.00	0.96	58ME(B,C)100–20
CNPH*3617A**	0.99	0.95	58ME(B,C)100–20
CNPH*4221A**	1.00	0.96	58ME(B,C)100–20
CNPH*4321A**	1.01	0.92	58ME(B,C)100–20
CNPV*3621A**	0.99	0.95	58ME(B,C)100–20
CNPV*4221A**	1.00	0.96	58ME(B,C)100–20
CSPH*3612A**	0.99	0.95	58ME(B,C)100–20
CSPH*4212A**	1.00	0.96	58ME(B,C)100–20
CAP**3617A**	0.99	0.95	58MEB040–12
CNPH*3617A**	0.99	0.95	58MEB040–12
CNPH*4221A**	1.00	0.96	58MEB040–12
CNPH*4321A**	1.01	0.92	58MEB040–12
CNPV*3617A**	0.99	0.95	58MEB040–12
CNPV*3717A**	1.01	0.96	58MEB040–12
CNPV*4217A**	1.00	0.96	58MEB040–12
CSPH*3612A**	0.99	0.95	58MEB040–12
CSPH*4212A**	1.00	0.96	58MEB040–12
CAP**3617A**	0.99	0.95	58MV(B,C)060–14
CNPH*3617A**	0.99	0.95	58MV(B,C)060–14
CNPH*4221A**	1.00	0.96	58MV(B,C)060–14
CNPH*4321A**	1.01	0.96	58MV(B,C)060–14
CNPV*3617A**	0.99	0.95	58MV(B,C)060–14
CNPV*3717A**	1.01	0.96	58MV(B,C)060–14
CNPV*4217A**	1.00	0.96	58MV(B,C)060–14
CSPH*3612A**	0.99	0.95	58MV(B,C)060–14
CSPH*4212A**	1.00	0.96	58MV(B,C)060–14
CAP**3621A**	0.99	0.95	58MV(B,C)080–14
CAP**4221A**	1.00	0.96	58MV(B,C)080–14
CNPH*3617A**	0.99	0.95	58MV(B,C)080–14
CNPH*4221A**	1.00	0.96	58MV(B,C)080–14
CNPH*4321A**	1.01	0.96	58MV(B,C)080–14
CNPV*3621A**	0.99	0.95	58MV(B,C)080–14
CNPV*4221A**	1.00	0.96	58MV(B,C)080–14
CSPH*3612A**	0.99	0.95	58MV(B,C)080–14
CSPH*4212A**	1.00	0.96	58MV(B,C)080–14
CAP**3621A**	0.99	0.95	58MV(B,C)080–20
CAP**4221A**	1.00	0.96	58MV(B,C)080–20
CNPH*3617A**	0.99	0.95	58MV(B,C)080–20
CNPH*4221A**	1.00	0.96	58MV(B,C)080–20

COOLING INDOOR MODEL	CAPACITY	POWER	FURNACE MODEL
CNPH*4321A**	1.01	0.96	58MV(B,C)080–20
CNPV*3621A**	0.99	0.95	58MV(B,C)080–20
CNPV*4221A**	1.00	0.96	58MV(B,C)080–20
CSPH*3612A**	0.99	0.95	58MV(B,C)080–20
CSPH*4212A**	1.00	0.96	58MV(B,C)080–20
CAP**3621A**	0.99	0.95	58MV(B,C)100–20
CAP**4221A**	1.00	0.96	58MV(B,C)100–20
CNPH*3617A**	0.99	0.95	58MV(B,C)100–20
CNPH*4221A**	1.00	0.96	58MV(B,C)100–20
CNPH*4321A**	1.01	0.96	58MV(B,C)100–20
CNPV*3621A**	0.99	0.95	58MV(B,C)100–20
CNPV*4221A**	1.00	0.96	58MV(B,C)100–20
CSPH*3612A**	0.99	0.95	58MV(B,C)100–20
CSPH*4212A**	1.00	0.96	58MV(B,C)100–20
CAP**4224A**	1.00	0.96	58MV(B,C)120–20
CNPH*3617A**	0.99	0.95	58MV(B,C)120–20
CNPH*4221A**	1.00	0.96	58MV(B,C)120–20
CNPH*4321A**	1.01	0.92	58MV(B,C)120–20
CNPV*4324A**	1.01	0.96	58MV(B,C)120–20
CSPH*3612A**	0.99	0.95	58MV(B,C)120–20
CSPH*4212A**	1.00	0.96	58MV(B,C)120–20
CAP**4224A**	1.00	0.96	58MVB040–14
CNPH*3617A**	0.99	0.95	58MVB040–14
CNPH*4221A**	1.00	0.96	58MVB040–14
CNPH*4321A**	1.01	0.96	58MVB040–14
CNPV*4324A**	1.01	0.96	58MVB040–14
CSPH*3612A**	0.99	0.95	58MVB040–14
CSPH*4212A**	1.00	0.96	58MVB040–14
CAP**3614A**	0.99	0.99	58PH*045–08
CNPH*3617A**	0.99	0.99	58PH*045–08
CNPH*4221A**	1.00	1.00	58PH*045–08
CNPH*4321A**	1.01	0.96	58PH*045–08
CSPH*3612A**	0.99	0.99	58PH*045–08
CSPH*4212A**	1.00	1.00	58PH*045–08
CAP**3617A**	0.99	0.95	58PH*070–16
CNPH*3617A**	0.99	0.95	58PH*070–16
CNPH*4221A**	1.00	0.96	58PH*070–16
CNPH*4321A**	1.01	0.96	58PH*070–16
CNPV*3617A**	0.99	0.95	58PH*070–16
CNPV*3717A**	1.01	0.96	58PH*070–16
CNPV*4217A**	1.00	0.96	58PH*070–16
CSPH*3612A**	0.99	0.95	58PH*070–16
CSPH*4212A**	1.00	0.96	58PH*070–16
CAP**3621A**	0.99	0.95	58PH*090–16
CAP**4221A**	1.00	0.96	58PH*090–16
CNPH*3617A**	0.99	0.95	58PH*090–16
CNPH*4221A**	1.00	0.96	58PH*090–16
CNPH*4321A**	1.01	0.92	58PH*090–16
CNPV*3621A**	0.99	0.95	58PH*090–16
CNPV*4221A**	1.00	0.96	58PH*090–16
CSPH*3612A**	0.99	0.95	58PH*090–16
CSPH*4212A**	1.00	0.96	58PH*090–16
CAP**3621A**	0.99	0.95	58PH*110–20
CAP**4221A**	1.00	0.96	58PH*110–20
CNPH*3617A**	0.99	0.95	58PH*110–20
CNPH*4221A**	1.00	0.96	58PH*110–20
CNPH*4321A**	1.01	0.92	58PH*110–20
CNPV*3621A**	0.99	0.95	58PH*110–20
CNPV*4221A**	1.00	0.96	58PH*110–20

COOLING INDOOR MODEL	CAPACITY	POWER	FURNACE MODEL
CSPH*3612A**	0.99	0.95	58PH*110–20
CSPH*4212A**	1.00	0.92	58PH*110–20
CAP**3617A**	0.99	0.95	58VLR105–12
CNPH*4221A**	0.99	0.95	58VLR105–12
CNPH*4321A**	1.00	0.96	58VLR105–12
CNPV*3617A**	0.99	0.95	58VLR105–12
CNPV*3717A**	1.00	0.96	58VLR105–12
CNPV*4217A**	1.00	0.96	58VLR105–12
CSPH*3612A**	1.00	0.96	58VLR105–12
CSPH*4212A**	1.00	0.96	58VLR105–12
CAP**3621A**	0.99	0.95	58VLR120–20
CAP**4221A**	1.00	0.96	58VLR120–20
CNPH*3617A**	0.99	0.95	58VLR120–20
CNPH*4221A**	1.00	0.96	58VLR120–20
CNPH*4321A**	1.00	0.96	58VLR120–20
CNPV*3621A**	0.99	0.95	58VLR120–20
CNPV*4221A**	1.00	0.96	58VLR120–20
CSPH*3612A**	1.00	0.96	58VLR120–20
CSPH*4212A**	1.00	0.96	58VLR120–20
CAP**3617A**	0.99	0.95	58VMR105–12
CNPH*4221A**	0.99	0.95	58VMR105–12
CNPH*4321A**	1.00	0.96	58VMR105–12
CNPV*3617A**	0.99	0.95	58VMR105–12
CNPV*3717A**	1.00	0.96	58VMR105–12
CNPV*4217A**	1.00	0.96	58VMR105–12
CSPH*3612A**	1.00	0.96	58VMR105–12
CSPH*4212A**	1.00	0.96	58VMR105–12
CAP**3621A**	0.99	0.95	58VMR120–20
CAP**4221A**	1.00	0.96	58VMR120–20
CNPH*3617A**	0.99	0.95	58VMR120–20
CNPH*4221A**	1.00	0.96	58VMR120–20
CNPH*4321A**	1.00	0.96	58VMR120–20
CNPV*3621A**	0.99	0.95	58VMR120–20
CNPV*4221A**	1.00	0.96	58VMR120–20
CSPH*3612A**	1.00	0.96	58VMR120–20
CSPH*4212A**	1.00	0.96	58VMR120–20

See notes on page 57

DETAILED COOLING CAPACITIES# CONTINUED

EVAPORATOR AIR		CONDENSER ENTERING AIR TEMPERATURES °F (°C)																	
		75 (23.9)			85 (29.4)			95 (35)			105 (40.6)			115 (46.1)			125 (51.7)		
CFM	EWB °F (°C)	Capacity MBtuh		Total System KW**	Capacity MBtuh		Total System KW**	Capacity MBtuh		Total System KW**	Capacity MBtuh		Total System KW**	Capacity MBtuh		Total System KW**	Capacity MBtuh		Total System KW**
		Total	Sens‡		Total	Sens‡		Total	Sens‡		Total	Sens‡		Total	Sens‡		Total	Sens‡	
25HBC342(A,W)**30 Outdoor Section With FY5BNF042 Indoor Section																			
1225	72 (22.2)	49.73	25.19	2.87	47.30	24.29	3.26	44.72	23.34	3.67	42.00	22.34	4.10	39.00	21.27	4.57	34.90	19.83	5.07
	67 (19.4)	45.20	31.03	2.91	42.74	30.05	3.28	40.18	29.00	3.68	37.52	27.92	4.09	33.60	26.36	4.47	29.64	24.80	4.91
	63 (17.2)††	41.68	29.81	2.94	39.38	28.78	3.29	36.99	27.72	3.66	33.47	26.20	4.00	29.79	24.62	4.38	26.18	23.08	4.83
	62 (16.7)	40.83	36.60	2.94	38.59	35.52	3.29	36.31	34.40	3.65	32.91	32.91	3.99	30.23	30.23	4.39	27.50	27.50	4.86
	57 (13.9)	39.22	39.22	2.94	37.49	37.49	3.28	35.65	35.65	3.64	32.85	32.85	3.99	30.17	30.17	4.39	27.45	27.45	4.86
1400	72 (22.2)	50.58	26.26	2.91	48.11	25.38	3.30	45.45	24.43	3.71	42.66	23.44	4.15	39.61	22.40	4.62	35.50	21.04	5.12
	67 (19.4)	46.15	32.96	2.95	43.64	32.01	3.33	41.00	31.00	3.73	38.21	29.88	4.15	34.49	28.41	4.55	30.29	26.73	4.98
	63 (17.2)††	42.62	31.68	2.98	40.20	30.62	3.34	37.69	29.54	3.71	34.43	28.14	4.07	30.49	26.45	4.45	26.75	24.81	4.89
	62 (16.7)	41.84	39.23	2.99	39.54	38.05	3.34	37.23	37.23	3.71	34.84	34.84	4.09	31.74	31.74	4.48	28.82	28.82	4.94
	57 (13.9)	40.94	40.94	2.99	39.09	39.09	3.34	37.16	37.16	3.71	34.72	34.72	4.09	31.68	31.68	4.48	28.77	28.77	4.94
1575	72 (22.2)	51.20	27.21	2.95	48.68	26.36	3.35	45.97	25.43	3.76	43.11	24.44	4.21	40.04	23.42	4.68	36.00	22.21	5.17
	67 (19.4)	46.85	34.75	2.99	44.29	33.84	3.38	41.62	32.83	3.77	38.81	31.75	4.20	35.50	30.44	4.65	30.86	28.53	5.05
	63 (17.2)††	43.35	33.48	3.03	40.81	32.37	3.39	38.22	31.26	3.77	35.47	30.07	4.16	31.06	28.16	4.52	27.24	26.34	4.96
	62 (16.7)	42.74	41.56	3.03	40.50	40.50	3.39	38.42	38.42	3.77	36.26	36.26	4.18	33.06	33.06	4.57	29.96	29.96	5.03
	57 (13.9)	42.40	42.40	3.03	40.44	40.44	3.39	38.37	38.37	3.77	36.21	36.21	4.18	33.00	33.00	4.57	29.91	29.91	5.03

COOLING INDOOR MODEL	CAPACITY	POWER	FURNACE MODEL
*FY5BNF042	1.00	1.00	
FB4CNF042	1.00	1.00	
FB4CNF042	1.00	0.96	
FB4CNF048	1.00	1.00	
FB4CNF048	1.00	0.96	
FE4AN(B,F)003	0.98	0.93	
FE4AN(B,F)005	1.00	0.92	
FE4ANB006	1.00	0.88	
FV4BN(B,F)003	0.98	0.93	
FV4BN(B,F)005	1.00	0.96	
FV4BNB006	1.00	0.88	
FV4CN(B,F)003	0.98	0.93	
FV4CN(B,F)005	1.00	0.96	
FV4CNB006	1.00	0.92	
FX4CN(B,F)042	1.00	0.96	
FX4CN(B,F)048	1.00	0.92	
FX4DN(B,F)043	1.00	0.96	
FX4DN(B,F)049	1.00	0.92	
FY4ANF042	0.98	0.98	
FY4ANF048	1.00	1.00	
FY5BNF042	1.00	1.00	
FY5BNF048	1.00	0.96	
FY5BNF048	1.00	1.00	
CAP**4221A**	0.98	0.98	
CAP**4224A**	0.98	0.98	
CAP**4817A**	1.00	1.00	
CAP**4821A**	1.00	1.00	
CAP**4823A**	1.00	1.00	
CAP**4824A**	1.00	1.00	
CNPF*4818A**	1.00	1.00	
CNPH*4221A**	0.98	0.98	
CNPH*4321A**	1.00	1.00	
CNPH*4821A**	1.00	1.00	
CNPV*4217A**	0.98	0.98	
CNPV*4221A**	0.98	0.98	
CNPV*4324A**	1.00	1.00	
CNPV*4821A**	1.00	1.00	

COOLING INDOOR MODEL	CAPACITY	POWER	FURNACE MODEL
CNPV*4824A**	1.00	1.00	
CSPH*4212A**	0.98	0.98	
CSPH*4812A**	1.00	1.00	
CNPH*4221A**	0.98	0.98	58CV(A,X)070–12
CNPH*4321A**	1.00	0.96	58CV(A,X)070–12
CNPH*4821A**	0.98	0.93	58CV(A,X)070–12
CSPH*4212A**	0.98	0.98	58CV(A,X)070–12
CSPH*4812A**	1.00	0.96	58CV(A,X)070–12
CAP**4817A**	1.00	0.96	58CV(A,X)090–16
CNPH*4221A**	0.98	0.93	58CV(A,X)090–16
CNPH*4321A**	1.00	0.96	58CV(A,X)090–16
CNPH*4821A**	1.00	0.96	58CV(A,X)090–16
CNPV*4217A**	0.98	0.93	58CV(A,X)090–16
CSPH*4212A**	0.98	0.93	58CV(A,X)090–16
CSPH*4812A**	1.00	0.96	58CV(A,X)090–16
CAP**4221A**	0.98	0.93	58CV(A,X)110–20
CAP**4821A**	0.98	0.93	58CV(A,X)110–20
CNPH*4221A**	0.98	0.93	58CV(A,X)110–20
CNPH*4321A**	1.00	0.96	58CV(A,X)110–20
CNPH*4821A**	1.00	0.96	58CV(A,X)110–20
CNPV*4221A**	0.98	0.98	58CV(A,X)110–20
CNPV*4821A**	1.00	0.96	58CV(A,X)110–20
CSPH*4212A**	0.98	0.93	58CV(A,X)110–20
CSPH*4812A**	1.00	0.96	58CV(A,X)110–20
CAP**4224A**	0.98	0.93	58CV(A,X)135–22
CAP**4824A**	1.00	0.96	58CV(A,X)135–22
CNPH*4221A**	0.98	0.93	58CV(A,X)135–22
CNPH*4321A**	1.00	0.92	58CV(A,X)135–22
CNPH*4821A**	1.00	0.96	58CV(A,X)135–22
CNPV*4324A**	1.00	0.92	58CV(A,X)135–22
CNPV*4824A**	1.00	0.96	58CV(A,X)135–22
CSPH*4212A**	0.98	0.93	58CV(A,X)135–22
CSPH*4812A**	1.00	0.96	58CV(A,X)135–22
CAP**4224A**	0.98	0.93	58CV(A,X)155–22
CAP**4824A**	1.00	0.96	58CV(A,X)155–22
CNPH*4221A**	0.98	0.93	58CV(A,X)155–22
CNPH*4321A**	1.00	0.92	58CV(A,X)155–22

COOLING INDOOR MODEL	CAPACITY	POWER	FURNACE MODEL
CNPH*4821A**	1.00	0.96	58CV(A,X)155–22
CNPV*4324A**	1.00	0.92	58CV(A,X)155–22
CNPV*4824A**	1.00	0.96	58CV(A,X)155–22
CSPH*4212A**	0.98	0.93	58CV(A,X)155–22
CSPH*4812A**	1.00	0.96	58CV(A,X)155–22
CNPH*4221A**	0.98	0.98	58HDV060––12
CNPH*4321A**	1.00	1.00	58HDV060––12
CNPH*4821A**	1.00	0.96	58HDV060––12
CSPH*4212A**	0.98	0.98	58HDV060––12
CSPH*4812A**	1.00	1.00	58HDV060––12
CAP**4823A**	1.00	0.96	58HDV080––20
CNPH*4221A**	0.98	0.98	58HDV080––20
CNPH*4321A**	1.00	0.96	58HDV080––20
CNPH*4821A**	1.00	0.96	58HDV080––20
CSPH*4212A**	0.98	0.93	58HDV080––20
CSPH*4812A**	1.00	0.96	58HDV080––20
CAP**4224A**	0.98	0.93	58HDV100––20
CAP**4824A**	1.00	0.96	58HDV100––20
CNPH*4221A**	0.98	0.98	58HDV100––20
CNPH*4321A**	1.00	0.96	58HDV100––20
CNPH*4821A**	1.00	0.96	58HDV100––20
CNPV*4324A**	1.00	0.92	58HDV100––20
CNPV*4824A**	1.00	0.96	58HDV100––20
CSPH*4212A**	0.98	0.93	58HDV100––20
CSPH*4812A**	1.00	0.96	58HDV100––20
CAP**4817A**	1.00	0.96	58ME(B,C)060–12
CNPH*4221A**	0.98	0.98	58ME(B,C)060–12
CNPH*4321A**	1.00	0.96	58ME(B,C)060–12
CNPH*4821A**	1.00	0.96	58ME(B,C)060–12
CNPV*4217A**	0.98	0.98	58ME(B,C)060–12
CSPH*4212A**	0.98	0.93	58ME(B,C)060–12
CSPH*4812A**	1.00	0.96	58ME(B,C)060–12
CAP**4817A**	1.00	0.96	58ME(B,C)080–12
CNPH*4221A**	0.98	0.98	58ME(B,C)080–12
CNPH*4321A**	1.00	0.92	58ME(B,C)080–12
CNPH*4821A**	1.00	0.96	58ME(B,C)080–12
CNPV*4217A**	0.98	0.93	58ME(B,C)080–12

DETAILED COOLING CAPACITIES# CONTINUED

25HBC342(A,W)30 Outdoor Section With FY5BNF042 Indoor Section**

COOLING INDOOR MODEL	CAPACITY	POWER	FURNACE MODEL
CSPH*4212A**	0.98	0.93	58ME(B,C)080–12
CSPH*4812A**	1.00	0.96	58ME(B,C)080–12
CAP**4817A**	1.00	0.96	58ME(B,C)080–16
CNPH*4221A**	0.98	0.98	58ME(B,C)080–16
CNPH*4321A**	1.00	0.96	58ME(B,C)080–16
CNPH*4821A**	1.00	0.96	58ME(B,C)080–16
CNPV*4217A**	0.98	0.93	58ME(B,C)080–16
CSPH*4212A**	0.98	0.93	58ME(B,C)080–16
CSPH*4812A**	1.00	0.96	58ME(B,C)080–16
CAP**4221A**	0.98	0.93	58ME(B,C)100–20
CAP**4821A**	1.00	0.96	58ME(B,C)100–20
CNPH*4221A**	0.98	0.93	58ME(B,C)100–20
CNPH*4321A**	1.00	0.92	58ME(B,C)100–20
CNPH*4821A**	1.00	0.96	58ME(B,C)100–20
CNPV*4221A**	0.98	0.93	58ME(B,C)100–20
CNPV*4821A**	1.00	0.96	58ME(B,C)100–20
CSPH*4212A**	0.98	0.93	58ME(B,C)100–20
CSPH*4812A**	1.00	0.96	58ME(B,C)100–20
CAP**4224A**	0.98	0.93	58ME(B,C)120–20
CAP**4824A**	1.00	0.96	58ME(B,C)120–20
CNPH*4221A**	0.98	0.93	58ME(B,C)120–20
CNPH*4321A**	1.00	0.92	58ME(B,C)120–20
CNPH*4821A**	1.00	0.96	58ME(B,C)120–20
CNPV*4324A**	1.00	0.92	58ME(B,C)120–20
CNPV*4824A**	1.00	0.96	58ME(B,C)120–20
CSPH*4212A**	0.98	0.93	58ME(B,C)120–20
CSPH*4812A**	1.00	0.96	58ME(B,C)120–20
CAP**4817A**	1.00	0.96	58MEB040–12
CNPH*4221A**	0.98	0.98	58MEB040–12
CNPH*4321A**	1.00	0.92	58MEB040–12
CNPH*4821A**	1.00	0.96	58MEB040–12
CNPV*4217A**	0.98	0.93	58MEB040–12
CSPH*4212A**	0.98	0.93	58MEB040–12
CSPH*4812A**	1.00	0.96	58MEB040–12
CAP**4817A**	1.00	0.96	58MV(B,C)060–14
CNPH*4221A**	0.98	0.98	58MV(B,C)060–14
CNPH*4321A**	1.00	0.96	58MV(B,C)060–14
CNPH*4821A**	1.00	0.96	58MV(B,C)060–14
CNPV*4217A**	0.98	0.98	58MV(B,C)060–14
CSPH*4212A**	0.98	0.93	58MV(B,C)060–14
CSPH*4812A**	1.00	0.96	58MV(B,C)060–14
CAP**4221A**	0.98	0.98	58MV(B,C)080–14
CAP**4821A**	0.98	0.98	58MV(B,C)080–14
CNPH*4221A**	0.98	0.98	58MV(B,C)080–14
CNPH*4321A**	1.00	0.96	58MV(B,C)080–14
CNPH*4821A**	0.98	0.93	58MV(B,C)080–14
CNPV*4221A**	0.98	0.98	58MV(B,C)080–14
CNPV*4821A**	0.98	0.93	58MV(B,C)080–14
CSPH*4212A**	0.98	0.98	58MV(B,C)080–14
CSPH*4812A**	1.00	0.96	58MV(B,C)080–14
CAP**4221A**	0.98	0.98	58MV(B,C)080–20
CAP**4821A**	0.98	0.93	58MV(B,C)080–20
CNPH*4221A**	0.98	0.98	58MV(B,C)080–20
CNPH*4321A**	1.00	0.96	58MV(B,C)080–20
CNPH*4821A**	1.00	0.96	58MV(B,C)080–20
CNPV*4221A**	0.98	0.98	58MV(B,C)080–20
CNPV*4821A**	1.00	0.96	58MV(B,C)080–20
CSPH*4212A**	0.98	0.93	58MV(B,C)080–20
CSPH*4812A**	1.00	0.96	58MV(B,C)080–20

COOLING INDOOR MODEL	CAPACITY	POWER	FURNACE MODEL
CAP**4221A**	0.98	0.98	58MV(B,C)100–20
CAP**4821A**	0.98	0.93	58MV(B,C)100–20
CNPH*4221A**	0.98	0.98	58MV(B,C)100–20
CNPH*4321A**	1.00	0.96	58MV(B,C)100–20
CNPH*4821A**	0.98	0.93	58MV(B,C)100–20
CNPV*4221A**	0.98	0.98	58MV(B,C)100–20
CNPV*4821A**	0.98	0.93	58MV(B,C)100–20
CSPH*4212A**	0.98	0.93	58MV(B,C)100–20
CSPH*4812A**	1.00	0.96	58MV(B,C)100–20
CAP**4224A**	0.98	0.93	58MV(B,C)120–20
CAP**4824A**	0.98	0.93	58MV(B,C)120–20
CNPH*4221A**	0.98	0.93	58MV(B,C)120–20
CNPH*4321A**	1.00	0.96	58MV(B,C)120–20
CNPH*4821A**	1.00	0.96	58MV(B,C)120–20
CNPV*4324A**	1.00	0.96	58MV(B,C)120–20
CNPV*4824A**	1.00	0.96	58MV(B,C)120–20
CSPH*4212A**	0.98	0.93	58MV(B,C)120–20
CSPH*4812A**	1.00	0.96	58MV(B,C)120–20
CAP**4224A**	0.98	0.98	58MVB040–14
CAP**4824A**	0.98	0.93	58MVB040–14
CNPH*4221A**	0.98	0.93	58MVB040–14
CNPH*4321A**	1.00	0.96	58MVB040–14
CNPH*4821A**	0.98	0.93	58MVB040–14
CNPV*4324A**	1.00	0.96	58MVB040–14
CNPV*4824A**	0.98	0.93	58MVB040–14
CSPH*4212A**	0.98	0.93	58MVB040–14
CSPH*4812A**	1.00	0.96	58MVB040–14
CAP**4817A**	1.00	0.96	58PH*070–16
CNPH*4221A**	0.98	0.98	58PH*070–16
CNPH*4321A**	1.00	1.00	58PH*070–16
CNPH*4821A**	1.00	1.00	58PH*070–16
CNPV*4217A**	0.98	0.98	58PH*070–16
CSPH*4212A**	0.98	0.98	58PH*070–16
CSPH*4812A**	1.00	0.96	58PH*070–16
CAP**4221A**	0.98	0.93	58PH*090–16
CAP**4821A**	1.00	0.96	58PH*090–16
CNPH*4221A**	0.98	0.93	58PH*090–16
CNPH*4321A**	1.00	0.96	58PH*090–16
CNPH*4821A**	1.00	0.96	58PH*090–16
CNPV*4221A**	0.98	0.93	58PH*090–16
CNPV*4821A**	1.00	0.96	58PH*090–16
CSPH*4212A**	0.98	0.93	58PH*090–16
CSPH*4812A**	1.00	0.96	58PH*090–16
CAP**4221A**	0.98	0.93	58PH*110–20
CAP**4821A**	1.00	0.96	58PH*110–20
CNPH*4221A**	0.98	0.93	58PH*110–20
CNPH*4321A**	1.00	0.92	58PH*110–20
CNPH*4821A**	1.00	0.96	58PH*110–20
CNPV*4221A**	0.98	0.93	58PH*110–20
CNPV*4821A**	1.00	0.96	58PH*110–20
CSPH*4212A**	0.98	0.93	58PH*110–20
CSPH*4812A**	1.00	0.96	58PH*110–20
CAP**4224A**	0.98	0.93	58PH*135–20
CAP**4824A**	1.00	0.96	58PH*135–20
CNPH*4221A**	0.98	0.93	58PH*135–20
CNPH*4321A**	1.00	0.92	58PH*135–20
CNPH*4821A**	1.00	0.96	58PH*135–20
CNPV*4324A**	1.00	0.92	58PH*135–20
CNPV*4824A**	1.00	0.96	58PH*135–20

COOLING INDOOR MODEL	CAPACITY	POWER	FURNACE MODEL
CSPH*4212A**	0.98	0.93	58PH*135–20
CSPH*4812A**	1.00	0.96	58PH*135–20
CAP**4221A**	0.98	0.93	58VLR120–20
CAP**4821A**	0.98	0.93	58VLR120–20
CNPH*4221A**	0.98	0.93	58VLR120–20
CNPH*4321A**	1.00	0.96	58VLR120–20
CNPH*4821A**	0.98	0.93	58VLR120–20
CNPV*4221A**	0.98	0.93	58VLR120–20
CNPV*4821A**	0.98	0.93	58VLR120–20
CSPH*4212A**	0.98	0.93	58VLR120–20
CSPH*4812A**	0.98	0.93	58VLR120–20
CAP**4221A**	0.96	0.92	58VMR120–20
CAP**4821A**	0.98	0.93	58VMR120–20
CNPH*4221A**	0.96	0.92	58VMR120–20
CNPH*4321A**	0.98	0.93	58VMR120–20
CNPH*4821A**	0.98	0.93	58VMR120–20
CNPV*4221A**	0.96	0.92	58VMR120–20
CNPV*4821A**	0.98	0.93	58VMR120–20
CSPH*4212A**	0.98	0.93	58VMR120–20
CSPH*4812A**	0.98	0.93	58VMR120–20

See notes on page 57

DETAILED COOLING CAPACITIES# CONTINUED

EVAPORATOR AIR		CONDENSER ENTERING AIR TEMPERATURES °F (°C)																	
		75 (23.9)			85 (29.4)			95 (35)			105 (40.6)			115 (46.1)			125 (51.7)		
CFM	EWB °F (°C)	Capacity MBtuh		Total System KW**	Capacity MBtuh		Total System KW**	Capacity MBtuh		Total System KW**	Capacity MBtuh		Total System KW**	Capacity MBtuh		Total System KW**	Capacity MBtuh		Total System KW**
		Total	Sens‡		Total	Sens‡		Total	Sens‡		Total	Sens‡		Total	Sens‡		Total	Sens‡	
25HBC348(A,W)**30 Outdoor Section With FY5BNF048 Indoor Section																			
1400	72 (22.2)	56.75	28.80	3.31	54.28	27.94	3.76	51.43	26.90	4.22	48.39	25.79	4.70	45.17	24.63	5.21	41.63	23.32	5.77
	67 (19.4)	51.75	35.65	3.33	48.95	34.49	3.77	46.13	33.32	4.19	43.28	32.16	4.65	40.21	30.92	5.14	35.34	28.98	5.62
	63 (17.2)††	47.63	34.18	3.34	45.09	33.03	3.74	42.49	31.87	4.16	39.75	30.67	4.59	35.15	28.68	5.02	31.03	26.91	5.53
	62 (16.7)	46.64	41.98	3.34	44.17	40.79	3.74	41.70	39.58	4.15	39.07	38.22	4.58	35.33	35.33	5.03	32.25	32.25	5.56
	57 (13.9)	44.75	44.75	3.34	42.84	42.84	3.73	40.89	40.89	4.14	38.73	38.73	4.58	35.25	35.25	5.03	32.18	32.18	5.56
1600	72 (22.2)	57.59	29.94	3.37	55.21	29.21	3.83	52.36	28.24	4.29	49.25	27.15	4.77	45.95	26.00	5.28	42.43	24.77	5.84
	67 (19.4)	52.83	37.85	3.39	50.06	36.88	3.83	47.00	35.60	4.27	44.04	34.41	4.73	40.91	33.16	5.22	36.21	31.29	5.71
	63 (17.2)††	48.72	36.35	3.41	46.01	35.16	3.82	43.30	33.98	4.23	40.50	32.77	4.67	36.12	30.88	5.11	31.71	28.97	5.62
	62 (16.7)	47.81	45.06	3.41	45.25	43.76	3.81	42.68	42.68	4.23	40.45	40.45	4.68	37.30	37.30	5.14	33.92	33.92	5.66
	57 (13.9)	46.76	46.76	3.41	44.70	44.70	3.81	42.58	42.58	4.23	40.39	40.39	4.67	37.22	37.22	5.14	33.85	33.85	5.66
1800	72 (22.2)	58.16	30.94	3.44	55.85	30.36	3.90	53.01	29.47	4.36	49.86	28.42	4.84	46.52	27.28	5.35	42.94	26.05	5.91
	67 (19.4)	53.61	39.88	3.45	50.82	39.01	3.90	47.74	37.83	4.35	44.58	36.54	4.80	41.43	35.28	5.30	37.03	33.50	5.81
	63 (17.2)††	49.58	38.44	3.47	46.74	37.19	3.89	43.92	35.97	4.31	41.06	34.74	4.75	36.91	32.95	5.20	32.36	30.89	5.70
	62 (16.7)	48.86	47.83	3.47	46.34	46.34	3.89	44.09	44.09	4.31	41.77	41.77	4.76	39.25	39.25	5.26	35.39	35.39	5.77
	57 (13.9)	48.47	48.47	3.47	46.27	46.27	3.89	44.03	44.03	4.31	41.71	41.71	4.76	39.19	39.19	5.26	35.33	35.33	5.76

COOLING INDOOR MODEL	CAPACITY	POWER	FURNACE MODEL
*FY5BNF048	1.00	1.00	
FB4CNF048	0.98	0.98	
FB4CNF048	0.98	0.98	
FB4CNF060	1.00	1.00	
FB4CNF060	1.00	0.96	
FE4AN(B,F)005	1.00	0.88	
FE4ANB006	1.00	0.88	
FV4BN(B,F)005	1.00	0.88	
FV4BNB006	1.00	0.88	
FV4CN(B,F)005	1.00	0.88	
FV4CNB006	1.00	0.88	
FX4CN(B,F)048	1.00	0.96	
FX4CN(B,F)060	1.00	0.96	
FX4DN(B,F)049	1.00	0.96	
FX4DN(B,F)061	1.00	0.88	
FY4ANB060	1.00	1.00	
FY4ANF048	1.00	1.00	
FY5BNB060	1.00	1.00	
FY5BNF048	1.00	1.00	
CAP**4817A**	0.98	0.98	
CAP**4821A**	0.98	0.98	
CAP**4823A**	0.98	0.98	
CAP**4824A**	0.98	0.98	
CAP**6021A**	1.00	1.00	
CAP**6024A**	1.00	1.00	
CAP**6025A**	1.00	1.00	
CNPH*4821A**	0.98	0.98	
CNPH*6024A**	1.00	1.00	
CNPH*6124A**	1.00	1.00	
CNPV*4821A**	0.98	0.98	
CNPV*4824A**	0.98	0.98	
CNPV*6024A**	1.00	1.00	
CNPV*6124A**	1.00	1.00	
CSPH*4812A**	0.98	0.98	
CSPH*6012A**	1.00	1.00	
CAP**4817A**	0.98	0.94	58CV(A,X)090–16
CNPH*4821A**	0.98	0.94	58CV(A,X)090–16

COOLING INDOOR MODEL	CAPACITY	POWER	FURNACE MODEL
CNPH*6024A**	1.00	0.96	58CV(A,X)090–16
CNPH*6124A**	1.00	0.96	58CV(A,X)090–16
CSPH*4812A**	0.98	0.94	58CV(A,X)090–16
CSPH*6012A**	1.00	0.96	58CV(A,X)090–16
CAP**4821A**	0.98	0.94	58CV(A,X)110–20
CAP**6021A**	1.00	0.96	58CV(A,X)110–20
CNPH*4821A**	0.98	0.94	58CV(A,X)110–20
CNPH*6024A**	1.00	0.96	58CV(A,X)110–20
CNPH*6124A**	1.00	0.96	58CV(A,X)110–20
CNPV*4821A**	0.98	0.94	58CV(A,X)110–20
CSPH*4812A**	0.98	0.94	58CV(A,X)110–20
CSPH*6012A**	1.00	0.96	58CV(A,X)110–20
CAP**4824A**	0.98	0.94	58CV(A,X)135–22
CAP**6024A**	1.00	0.96	58CV(A,X)135–22
CAP**6025A**	1.00	0.96	58CV(A,X)135–22
CNPH*4821A**	0.98	0.94	58CV(A,X)135–22
CNPH*6024A**	1.00	0.96	58CV(A,X)135–22
CNPH*6124A**	1.00	0.96	58CV(A,X)135–22
CNPV*4824A**	0.98	0.94	58CV(A,X)135–22
CNPV*6024A**	1.00	0.96	58CV(A,X)135–22
CNPV*6124A**	1.00	0.96	58CV(A,X)135–22
CSPH*4812A**	0.98	0.94	58CV(A,X)135–22
CSPH*6012A**	1.00	0.96	58CV(A,X)135–22
CAP**4824A**	0.98	0.94	58CV(A,X)155–22
CAP**6024A**	1.00	0.96	58CV(A,X)155–22
CAP**6025A**	1.00	0.96	58CV(A,X)155–22
CNPH*4821A**	0.98	0.94	58CV(A,X)155–22
CNPH*6024A**	1.00	0.96	58CV(A,X)155–22
CNPH*6124A**	1.00	0.96	58CV(A,X)155–22
CNPV*4824A**	0.98	0.94	58CV(A,X)155–22
CNPV*6024A**	1.00	0.96	58CV(A,X)155–22
CNPV*6124A**	1.00	0.96	58CV(A,X)155–22
CSPH*4812A**	0.98	0.94	58CV(A,X)155–22
CSPH*6012A**	1.00	0.96	58CV(A,X)155–22
CAP**4823A**	0.98	0.94	58HDV080––20
CNPH*4821A**	0.98	0.94	58HDV080––20
CNPH*6024A**	1.00	0.96	58HDV080––20

COOLING INDOOR MODEL	CAPACITY	POWER	FURNACE MODEL
CNPH*6124A**	1.00	0.96	58HDV080––20
CSPH*4812A**	0.98	0.94	58HDV080––20
CSPH*6012A**	1.00	0.96	58HDV080––20
CAP**4824A**	0.98	0.94	58HDV100––20
CAP**6024A**	1.00	0.96	58HDV100––20
CAP**6025A**	1.00	0.96	58HDV100––20
CNPH*4821A**	0.98	0.94	58HDV100––20
CNPH*6024A**	1.00	0.96	58HDV100––20
CNPH*6124A**	1.00	0.96	58HDV100––20
CNPV*4824A**	0.98	0.94	58HDV100––20
CNPV*6024A**	1.00	0.96	58HDV100––20
CNPV*6124A**	1.00	0.96	58HDV100––20
CSPH*4812A**	0.98	0.94	58HDV100––20
CSPH*6012A**	1.00	0.96	58HDV100––20
CAP**4817A**	0.98	0.94	58ME(B,C)080–16
CNPH*4821A**	0.98	0.94	58ME(B,C)080–16
CNPH*6024A**	1.00	0.96	58ME(B,C)080–16
CNPH*6124A**	1.00	0.96	58ME(B,C)080–16
CSPH*4812A**	0.98	0.94	58ME(B,C)080–16
CSPH*6012A**	1.00	0.96	58ME(B,C)080–16
CAP**4821A**	0.98	0.94	58ME(B,C)100–20
CAP**6021A**	1.00	0.96	58ME(B,C)100–20
CNPH*4821A**	0.98	0.94	58ME(B,C)100–20
CNPH*6024A**	1.00	0.96	58ME(B,C)100–20
CNPH*6124A**	1.00	0.96	58ME(B,C)100–20
CNPV*4821A**	0.98	0.94	58ME(B,C)100–20
CSPH*4812A**	0.98	0.94	58ME(B,C)100–20
CSPH*6012A**	1.00	0.96	58ME(B,C)100–20
CAP**4824A**	0.98	0.94	58ME(B,C)120–20
CAP**6024A**	1.00	0.96	58ME(B,C)120–20
CAP**6025A**	1.00	0.96	58ME(B,C)120–20
CNPH*4821A**	0.98	0.94	58ME(B,C)120–20
CNPH*6024A**	1.00	0.96	58ME(B,C)120–20
CNPH*6124A**	1.00	0.96	58ME(B,C)120–20
CNPV*4824A**	0.98	0.94	58ME(B,C)120–20
CNPV*6024A**	1.00	0.96	58ME(B,C)120–20
CNPV*6124A**	1.00	0.92	58ME(B,C)120–20

DETAILED COOLING CAPACITIES# CONTINUED

25HBC348(A,W)30 Outdoor Section With FY5BNF048 Indoor Section**

COOLING INDOOR MODEL	CAPACITY	POWER	FURNACE MODEL
CSPH*4812A**	0.98	0.94	58ME(B,C)120–20
CSPH*6012A**	1.00	0.96	58ME(B,C)120–20
CAP**6021A**	0.98	0.94	58MV(B,C)080–20
CNPH*4821A**	0.98	0.94	58MV(B,C)080–20
CNPH*6024A**	0.98	0.94	58MV(B,C)080–20
CNPH*6124A**	0.98	0.94	58MV(B,C)080–20
CNPV*4821A**	0.98	0.94	58MV(B,C)080–20
CSPH*4812A**	0.98	0.94	58MV(B,C)080–20
CSPH*6012A**	1.00	0.96	58MV(B,C)080–20
CAP**4821A**	0.98	0.94	58MV(B,C)100–20
CAP**6021A**	1.00	0.96	58MV(B,C)100–20
CNPH*4821A**	0.98	0.94	58MV(B,C)100–20
CNPH*6024A**	1.00	0.96	58MV(B,C)100–20
CNPH*6124A**	1.00	0.96	58MV(B,C)100–20
CNPV*4821A**	0.98	0.94	58MV(B,C)100–20
CSPH*4812A**	0.98	0.94	58MV(B,C)100–20
CSPH*6012A**	1.00	0.96	58MV(B,C)100–20
CAP**4824A**	0.98	0.94	58MV(B,C)120–20
CAP**6024A**	1.00	0.96	58MV(B,C)120–20
CAP**6025A**	1.00	0.96	58MV(B,C)120–20
CNPH*4821A**	0.98	0.94	58MV(B,C)120–20
CNPH*6024A**	1.00	0.96	58MV(B,C)120–20
CNPH*6124A**	1.00	0.96	58MV(B,C)120–20
CNPV*4824A**	0.98	0.94	58MV(B,C)120–20
CNPV*6024A**	1.00	0.96	58MV(B,C)120–20
CNPV*6124A**	1.00	0.96	58MV(B,C)120–20
CSPH*4812A**	0.98	0.94	58MV(B,C)120–20
CSPH*6012A**	1.00	0.96	58MV(B,C)120–20
CNPH*6024A**	1.00	1.00	58PH*070–16
CNPH*6124A**	1.00	1.00	58PH*070–16
CSPH*6012A**	1.00	1.00	58PH*070–16
CAP**4821A**	0.98	0.94	58PH*090–16
CAP**6021A**	1.00	0.96	58PH*090–16
CNPH*4821A**	0.98	0.94	58PH*090–16
CNPH*6024A**	1.00	0.96	58PH*090–16
CNPH*6124A**	1.00	0.96	58PH*090–16
CNPV*4821A**	0.98	0.94	58PH*090–16
CSPH*4812A**	0.98	0.94	58PH*090–16
CSPH*6012A**	1.00	0.96	58PH*090–16
CAP**4821A**	0.98	0.94	58PH*110–20
CAP**6021A**	1.00	0.96	58PH*110–20
CNPH*4821A**	0.98	0.94	58PH*110–20
CNPH*6024A**	1.00	0.96	58PH*110–20
CNPH*6124A**	1.00	0.96	58PH*110–20
CNPV*4821A**	0.98	0.94	58PH*110–20
CSPH*4812A**	0.98	0.94	58PH*110–20
CSPH*6012A**	1.00	0.96	58PH*110–20
CAP**4824A**	0.98	0.94	58PH*135–20
CAP**6024A**	1.00	0.96	58PH*135–20
CAP**6025A**	1.00	0.96	58PH*135–20
CNPH*4821A**	0.98	0.94	58PH*135–20
CNPH*6024A**	1.00	0.96	58PH*135–20
CNPH*6124A**	1.00	0.96	58PH*135–20
CNPV*4824A**	0.98	0.94	58PH*135–20
CNPV*6024A**	1.00	0.96	58PH*135–20
CNPV*6124A**	1.00	0.96	58PH*135–20
CSPH*4812A**	0.98	0.94	58PH*135–20
CSPH*6012A**	1.00	0.96	58PH*135–20
CAP**4821A**	0.98	0.94	58VLR120–20

COOLING INDOOR MODEL	CAPACITY	POWER	FURNACE MODEL
CAP**6021A**	0.98	0.94	58VLR120–20
CNPH*4821A**	0.98	0.94	58VLR120–20
CNPH*6024A**	0.98	0.94	58VLR120–20
CNPH*6124A**	1.00	0.96	58VLR120–20
CNPV*4821A**	0.98	0.94	58VLR120–20
CSPH*4812A**	0.98	0.94	58VLR120–20
CSPH*6012A**	1.00	0.96	58VLR120–20
CAP**4821A**	0.98	0.94	58VMR120–20
CAP**6021A**	0.98	0.94	58VMR120–20
CNPH*4821A**	0.98	0.94	58VMR120–20
CNPH*6024A**	0.98	0.94	58VMR120–20
CNPH*6124A**	1.00	0.96	58VMR120–20
CNPV*4821A**	0.98	0.94	58VMR120–20
CSPH*4812A**	0.98	0.94	58VMR120–20
CSPH*6012A**	1.00	0.96	58VMR120–20

See notes on page 57

DETAILED COOLING CAPACITIES# CONTINUED

EVAPORATOR AIR		CONDENSER ENTERING AIR TEMPERATURES °F (°C)																	
		75 (23.9)			85 (29.4)			95 (35)			105 (40.6)			115 (46.1)			125 (51.7)		
CFM	EWB °F (°C)	Capacity MBtuh		Total System KW**	Capacity MBtuh		Total System KW**	Capacity MBtuh		Total System KW**	Capacity MBtuh		Total System KW**	Capacity MBtuh		Total System KW**	Capacity MBtuh		Total System KW**
		Total	Sens‡		Total	Sens‡		Total	Sens‡		Total	Sens‡		Total	Sens‡		Total	Sens‡	
25HBC360(A,W)**30 Outdoor Section With FY5BNB060 Indoor Section																			
1750	72 (22.2)	70.34	35.38	4.52	67.10	34.14	4.98	63.63	32.83	5.48	60.01	31.48	6.03	56.06	30.03	6.63	51.70	28.45	7.27
	67 (19.4)	64.72	44.25	4.46	61.72	42.98	4.92	58.50	41.62	5.42	55.15	40.23	5.97	51.50	38.73	6.57	47.50	37.11	7.21
	63 (17.2)††	60.52	42.98	4.41	57.68	41.67	4.87	54.66	40.31	5.37	51.50	38.90	5.92	48.09	37.40	6.52	44.37	35.78	7.17
	62 (16.7)	59.39	53.03	4.40	56.60	51.67	4.86	53.67	50.23	5.36	50.63	48.68	5.91	47.46	47.46	6.51	44.40	44.40	7.17
	57 (13.9)	57.36	57.36	4.38	55.12	55.12	4.84	52.73	52.73	5.35	50.21	50.21	5.90	47.45	47.45	6.51	44.40	44.40	7.17
2000	72 (22.2)	71.28	36.87	4.64	67.97	35.64	5.09	64.37	34.31	5.59	60.64	32.95	6.14	56.56	31.48	6.74	52.07	29.88	7.39
	67 (19.4)	65.71	46.88	4.58	62.60	45.59	5.03	59.26	44.22	5.53	55.79	42.80	6.08	52.01	41.28	6.69	47.89	39.62	7.33
	63 (17.2)††	61.54	45.45	4.53	58.58	44.14	4.99	55.44	42.75	5.49	52.17	41.32	6.04	48.63	39.78	6.64	44.80	38.11	7.28
	62 (16.7)	60.48	56.64	4.52	57.63	55.18	4.98	54.66	54.31	5.48	51.85	51.85	6.03	48.91	48.91	6.64	45.66	45.66	7.30
	57 (13.9)	59.46	59.46	4.51	57.07	57.07	4.97	54.53	54.53	5.48	51.85	51.85	6.03	48.92	48.92	6.64	45.67	45.67	7.30
2250	72 (22.2)	71.96	38.30	4.75	68.56	37.06	5.21	64.87	35.72	5.71	61.04	34.35	6.26	56.86	32.87	6.86	52.26	31.26	7.50
	67 (19.4)	66.40	49.38	4.70	63.21	48.09	5.15	59.77	46.69	5.65	56.21	45.25	6.20	52.34	43.69	6.80	48.13	41.98	7.44
	63 (17.2)††	62.26	47.81	4.65	59.21	46.48	5.10	55.98	45.06	5.60	52.62	43.60	6.15	49.00	42.02	6.75	45.07	40.30	7.40
	62 (16.7)	61.41	59.80	4.64	58.65	58.65	5.10	55.97	55.97	5.61	53.15	53.15	6.16	50.06	50.06	6.77	46.64	46.64	7.42
	57 (13.9)	61.16	61.16	4.64	58.65	58.65	5.10	55.97	55.97	5.61	53.16	53.16	6.16	50.07	50.07	6.77	46.65	46.65	7.42

COOLING INDOOR MODEL	CAPACITY	POWER	FURNACE MODEL
*FY5BNB060	1.00	1.00	
FB4CNF060	0.99	1.00	
FE4ANB006	1.02	0.99	
FV4BNB006	1.02	0.96	
FX4CN(B,F)048	0.98	0.97	
FX4CN(B,F)060	1.01	0.98	
FX4DN(B,F)061	1.01	0.96	
FY4ANB060	1.00	1.01	
CAP**6021A**	0.99	1.00	
CAP**6024A**	0.99	1.00	
CAP**6025A**	0.99	1.00	
CNPH*6024A**	0.99	1.00	
CNPH*6124A**	1.00	0.99	
CNPV*6024A**	0.99	1.00	
CNPV*6124A**	1.01	1.00	
CSPH*6012A**	1.00	1.01	
CAP**6021A**	0.99	0.98	58CV(A,X)110–20
CNPH*6024A**	0.99	0.98	58CV(A,X)110–20
CNPH*6124A**	1.00	0.99	58CV(A,X)110–20
CSPH*6012A**	1.00	0.99	58CV(A,X)110–20
CAP**6024A**	0.99	0.98	58CV(A,X)135–22
CNPH*6024A**	0.99	0.98	58CV(A,X)135–22

COOLING INDOOR MODEL	CAPACITY	POWER	FURNACE MODEL
CNPH*6124A**	1.00	0.99	58CV(A,X)135–22
CNPV*6024A**	0.99	0.98	58CV(A,X)135–22
CNPV*6124A**	1.01	0.98	58CV(A,X)135–22
CSPH*6012A**	1.00	0.97	58CV(A,X)135–22
CAP**6024A**	1.00	0.97	58CV(A,X)155–22
CNPH*6024A**	0.99	0.96	58CV(A,X)155–22
CNPH*6124A**	1.00	0.97	58CV(A,X)155–22
CNPV*6024A**	0.99	0.96	58CV(A,X)155–22
CNPV*6124A**	1.01	0.98	58CV(A,X)155–22
CSPH*6012A**	1.00	0.97	58CV(A,X)155–22
CNPV*6124A**	1.01	1.01	58HDV100––20
CNPH*6024A**	0.98	1.02	58ME(B,C)080–16
CSPH*6012A**	0.98	1.02	58ME(B,C)080–16
CAP**6021A**	0.99	0.98	58ME(B,C)100–20
CNPH*6024A**	0.99	0.98	58ME(B,C)100–20
CNPH*6124A**	0.99	0.98	58ME(B,C)100–20
CSPH*6012A**	0.99	0.98	58ME(B,C)100–20
CAP**6024A**	0.99	0.98	58ME(B,C)120–20
CNPH*6024A**	0.99	0.98	58ME(B,C)120–20
CNPH*6124A**	1.00	0.97	58ME(B,C)120–20
CNPV*6024A**	0.99	0.98	58ME(B,C)120–20
CNPV*6124A**	1.01	0.98	58ME(B,C)120–20

COOLING INDOOR MODEL	CAPACITY	POWER	FURNACE MODEL
CSPH*6012A**	1.00	0.99	58ME(B,C)120–20
CAP**6021A**	0.98	0.99	58MV(B,C)100–20
CSPH*6012A**	0.99	1.00	58MV(B,C)100–20
CAP**6024A**	0.98	0.99	58MV(B,C)120–20
CNPH*6024A**	0.98	0.99	58MV(B,C)120–20
CNPH*6124A**	0.99	0.98	58MV(B,C)120–20
CNPV*6024A**	0.98	0.99	58MV(B,C)120–20
CNPV*6124A**	1.00	0.99	58MV(B,C)120–20
CSPH*6012A**	0.99	1.00	58MV(B,C)120–20
CAP**6021A**	0.99	0.98	58PH*090–16
CNPH*6024A**	0.98	0.97	58PH*090–16
CSPH*6012A**	0.99	0.98	58PH*090–16
CAP**6021A**	1.00	0.99	58PH*110–20
CNPH*6024A**	0.99	0.98	58PH*110–20
CNPH*6124A**	1.00	0.97	58PH*110–20
CSPH*6012A**	1.00	0.99	58PH*110–20
CAP**6024A**	0.99	0.98	58PH*135–20
CNPH*6024A**	0.99	0.98	58PH*135–20
CNPH*6124A**	0.99	0.98	58PH*135–20
CNPV*6024A**	0.99	0.98	58PH*135–20
CNPV*6124A**	1.01	0.98	58PH*135–20
CSPH*6012A**	1.00	0.99	58PH*135–20

* Tested combination.

† Total and sensible capacities are net capacities. Blower motor heat has been subtracted.

‡ Sensible capacities shown are based on 80°F (27°C) entering air at the indoor coil. For sensible capacities at other than 80°F (27°C), deduct 835 Btuh (245 kW) per 1000 CFM (480 L/S) of indoor coil air for each degree below 80°F (27°C), or add 835 Btuh (245 kW) per 1000 CFM (480 L/S) of indoor coil air per degree above 80°F (27°C).

Detailed cooling capacities are based on indoor and outdoor unit at the same elevation per AHRI standard 210/240–2008. If additional tubing length and/or indoor unit is located above outdoor unit, a slight variation in capacity may occur.

** System kw is total of indoor and outdoor unit kilowatts.

†† At TVA rating indoor condition (75°F edb/63°F ewb). All other indoor air temperatures are at 80°F edb.

NOTE: When the required data falls between the published data, interpolation may be performed. Extrapolation is not an acceptable practice.

EWB — Entering Wet Bulb

HEAT PUMP HEATING PERFORMANCE

INDOOR AIR		OUTDOOR COIL ENTERING AIR TEMPERATURES ° F (° C)																							
		–3 (–19.4)			7 (–13.9)			17 (–8.3)			27 (–2.8)			37 (2.8)			47 (8.3)			57 (13.9)			67 (19.4)		
EDB ° F (° C)	CFM	Capacity MBtuh		Total Syst. KW†	Capacity MBtuh		Total Syst. KW†	Capacity MBtuh		Total Syst. KW†	Capacity MBtuh		Total Syst. KW†	Capacity MBtuh		Total Syst. KW†	Capacity MBtuh		Total Syst. KW†	Capacity MBtuh		Total Syst. KW†	Capacity MBtuh		Total Syst. KW†
		Total	Integ*		Total	Integ*		Total	Integ*		Total	Integ*		Total	Integ*		Total	Integ*		Total	Integ*		Total	Integ*	
25HBC318(A,W)**30 Outdoor Section With FY5BNF018 Indoor Section																									
65 (18.3)	525	5.41	4.98	1.10	7.54	6.93	1.15	10.08	9.19	1.21	12.38	11.00	1.26	14.90	13.56	1.32	17.69	17.69	1.39	19.98	19.98	1.45	22.14	22.14	1.52
	600	5.51	5.07	1.11	7.66	7.04	1.16	10.23	9.33	1.21	12.56	11.15	1.25	15.13	13.77	1.31	17.82	17.82	1.37	19.82	19.82	1.41	21.62	21.62	1.46
	675	5.62	5.17	1.13	7.78	7.15	1.17	10.36	9.45	1.22	12.71	11.29	1.25	15.32	13.94	1.30	17.80	17.80	1.35	19.61	19.61	1.39	20.95	20.95	1.42
70 (21.1)	525	5.15	4.74	1.15	7.28	6.69	1.20	9.58	8.73	1.26	12.15	10.79	1.32	14.63	13.31	1.38	17.39	17.39	1.46	19.80	19.80	1.52	22.05	22.05	1.60
	600	5.26	4.84	1.16	7.41	6.81	1.21	9.75	8.89	1.26	12.33	10.95	1.31	14.85	13.51	1.37	17.60	17.60	1.43	19.72	19.72	1.48	21.64	21.64	1.54
	675	5.36	4.93	1.17	7.53	6.92	1.22	9.93	9.05	1.27	12.48	11.08	1.31	15.04	13.69	1.36	17.67	17.67	1.42	19.54	19.54	1.46	21.11	21.11	1.50
75 (23.9)	525	4.87	4.48	1.19	6.99	6.42	1.25	9.27	8.45	1.31	11.92	10.59	1.38	14.34	13.05	1.44	17.07	17.07	1.53	19.60	19.60	1.60	21.88	21.88	1.67
	600	4.99	4.59	1.21	7.13	6.55	1.26	9.44	8.61	1.31	12.09	10.74	1.37	14.56	13.25	1.43	17.33	17.33	1.50	19.57	19.57	1.56	21.60	21.60	1.62
	675	5.09	4.68	1.22	7.26	6.67	1.27	9.59	8.75	1.32	12.25	10.88	1.37	14.75	13.43	1.42	17.47	17.47	1.48	19.47	19.47	1.53	21.18	21.18	1.58

HEATING INDOOR MODEL	CAPACITY	POWER	FURNACE MODEL
*FY5BNF018	1.00	1.00	
FB4CNF018	0.99	0.96	
FB4CNF018	0.99	0.96	
FB4CNF024	0.99	0.96	
FB4CNF024	0.99	0.96	
FE4ANF002	0.97	0.91	
FF1ENP019	0.98	0.95	
FF1ENP024	1.00	1.02	
FF1ENP025	0.98	0.92	
FF1ENP031	0.97	0.92	
FV4BNF002	0.97	0.91	
FV4CNF002	0.97	0.91	
FX4CNF018	0.98	0.95	
FX4CNF024	0.98	0.93	
FX4DN(B,F)031	0.97	0.93	
FX4DNF019	0.98	0.91	
FX4DNF025	0.97	0.90	
FY5BNF018	1.00	1.00	
FY5BNF024	0.98	0.97	
FY5BNF024	0.98	0.97	
CAP**2414A**	1.00	1.01	
CAP**2417A**	1.01	1.02	
CNPF*2418A**	1.01	1.01	
CNPH*2417A**	1.01	1.01	
CNPV*1917A**	1.01	0.99	
CNPV*2414A**	1.00	0.99	
CNPV*2417A**	1.01	1.01	
CSPH*2412A**	1.01	1.01	
CAP**1814A**	0.97	0.99	58CV(A,X)070–12
CAP**2414A**	0.97	0.95	58CV(A,X)070–12
CNPH*2417A**	0.98	0.95	58CV(A,X)070–12
CNPV*1814A**	0.98	0.97	58CV(A,X)070–12
CNPV*2414A**	0.98	0.95	58CV(A,X)070–12
CSPH*2412A**	0.98	0.95	58CV(A,X)070–12
CAP**2417A**	0.98	0.95	58CV(A,X)090–16
CNPH*2417A**	0.98	0.94	58CV(A,X)090–16
CNPV*1917A**	0.98	0.93	58CV(A,X)090–16
CNPV*2417A**	0.98	0.94	58CV(A,X)090–16
CSPH*2412A**	0.98	0.94	58CV(A,X)090–16
CNPH*2417A**	1.01	0.93	58HDV040––12
CSPH*2412A**	0.99	0.92	58HDV040––12
CNPH*2417A**	1.01	0.93	58HDV060––12
CSPH*2412A**	0.99	0.92	58HDV060––12
CAP**2417A**	0.99	0.92	58ME(B,C)060–12

HEATING INDOOR MODEL	CAPACITY	POWER	FURNACE MODEL
CNPH*2417A**	0.98	0.92	58ME(B,C)060–12
CNPV*1917A**	0.99	0.90	58ME(B,C)060–12
CNPV*2417A**	0.98	0.92	58ME(B,C)060–12
CSPH*2412A**	0.97	0.93	58ME(B,C)060–12
CAP**2417A**	0.99	0.90	58MEB040–12
CNPH*2417A**	0.99	0.91	58MEB040–12
CNPV*1917A**	0.99	0.88	58MEB040–12
CNPV*2417A**	0.99	0.91	58MEB040–12
CSPH*2412A**	0.98	0.91	58MEB040–12
CAP**2417A**	0.98	0.96	58MV(B,C)060–14
CNPH*2417A**	0.98	0.95	58MV(B,C)060–14
CNPV*1917A**	0.98	0.93	58MV(B,C)060–14
CNPV*2417A**	0.98	0.95	58MV(B,C)060–14
CSPH*2412A**	0.98	0.95	58MV(B,C)060–14
CNPH*2417A**	0.97	0.94	58MV(B,C)080–14
CSPH*2412A**	0.97	0.94	58MV(B,C)080–14
CNPH*2417A**	0.98	0.95	58MVB040–14
CSPH*2412A**	0.98	0.95	58MVB040–14
CAP**1814A**	0.98	0.97	58PH*045–08
CAP**2414A**	0.99	0.94	58PH*045–08
CNPH*2417A**	0.98	0.93	58PH*045–08
CNPV*1814A**	0.98	0.95	58PH*045–08
CNPV*2414A**	0.98	0.93	58PH*045–08
CSPH*2412A**	0.98	0.93	58PH*045–08
CAP**2417A**	0.98	0.91	58VLR105–12
CNPH*2417A**	0.98	0.90	58VLR105–12
CNPV*1917A**	0.98	0.89	58VLR105–12
CNPV*2417A**	0.98	0.90	58VLR105–12
CSPH*2412A**	0.98	0.90	58VLR105–12
CAP**2417A**	0.98	0.95	58VMR105–12
CNPH*2417A**	0.98	0.94	58VMR105–12
CNPV*1917A**	0.98	0.92	58VMR105–12
CNPV*2417A**	0.98	0.94	58VMR105–12
CSPH*2412A**	0.98	0.94	58VMR105–12

See notes on page 69

HEAT PUMP HEATING PERFORMANCE CONTINUED

INDOOR AIR		OUTDOOR COIL ENTERING AIR TEMPERATURES ° F (° C)																							
		−3 (−19.4)			7 (−13.9)			17 (−8.3)			27 (−2.8)			37 (2.8)			47 (8.3)			57 (13.9)			67 (19.4)		
EDB ° F (° C)	CFM	Capacity MBtuh Total	Capacity MBtuh In-teg*	Total Syst. KW†	Capacity MBtuh Total	Capacity MBtuh In-teg*	Total Syst. KW†	Capacity MBtuh Total	Capacity MBtuh In-teg*	Total Syst. KW†	Capacity MBtuh Total	Capacity MBtuh In-teg*	Total Syst. KW†	Capacity MBtuh Total	Capacity MBtuh In-teg*	Total Syst. KW†	Capacity MBtuh Total	Capacity MBtuh In-teg*	Total Syst. KW†	Capacity MBtuh Total	Capacity MBtuh In-teg*	Total Syst. KW†	Capacity MBtuh Total	Capacity MBtuh In-teg*	Total Syst. KW†
25HBC324(A,W)**30 Outdoor Section With FY5BNF024 Indoor Section																									
65 (18.3)	700	7.43	6.83	1.45	10.13	9.30	1.53	12.97	11.83	1.60	16.44	14.60	1.66	19.51	17.75	1.72	22.84	22.84	1.80	26.62	26.62	1.91	30.72	30.72	2.03
	800	7.60	6.99	1.47	10.32	9.48	1.54	13.20	12.04	1.60	16.68	14.81	1.65	19.78	18.00	1.70	23.16	23.16	1.77	27.04	27.04	1.87	30.78	30.78	1.97
	900	7.75	7.13	1.48	10.49	9.64	1.55	13.41	12.22	1.60	16.88	14.99	1.65	20.02	18.21	1.69	23.44	23.44	1.76	27.26	27.26	1.83	30.66	30.66	1.92
70 (21.1)	700	7.00	6.44	1.51	9.69	8.90	1.60	12.55	11.44	1.67	15.77	14.00	1.73	19.17	17.44	1.80	22.46	22.46	1.88	26.16	26.16	2.00	30.32	30.32	2.12
	800	7.16	6.59	1.53	9.89	9.09	1.61	12.78	11.65	1.66	16.33	14.50	1.73	19.45	17.70	1.78	22.80	22.80	1.86	26.59	26.59	1.96	30.48	30.48	2.06
	900	7.31	6.73	1.54	10.06	9.25	1.62	12.99	11.84	1.67	16.54	14.69	1.73	19.67	17.90	1.77	23.06	23.06	1.84	26.90	26.90	1.92	30.43	30.43	2.01
75 (23.9)	700	6.53	6.01	1.57	9.23	8.48	1.66	12.09	11.03	1.74	15.20	13.50	1.80	18.83	17.13	1.89	22.08	22.08	1.97	25.71	25.71	2.09	29.90	29.90	2.22
	800	6.69	6.16	1.59	9.43	8.67	1.67	12.33	11.24	1.74	15.50	13.76	1.79	19.11	17.39	1.87	22.40	22.40	1.94	26.13	26.13	2.05	30.11	30.11	2.15
	900	6.83	6.29	1.60	9.61	8.83	1.68	12.53	11.42	1.74	15.79	14.02	1.79	19.32	17.58	1.86	22.69	22.69	1.92	26.46	26.46	2.02	30.17	30.17	2.11

HEATING INDOOR MODEL	CAPACITY	POWER	FURNACE MODEL
*FY5BNF024	1.00	1.00	
FB4CNF024	0.99	1.00	
FB4CNF024	0.99	1.00	
FB4CNF030	0.98	0.95	
FB4CNF030	0.98	0.95	
FE4AN(B,F)003	0.96	0.93	
FE4ANF002	0.97	0.94	
FF1ENP025	0.99	0.98	
FF1ENP031	0.99	0.98	
FF1ENP037	0.99	0.96	
FV4BN(B,F)003	0.96	0.93	
FV4BNF002	0.97	0.94	
FV4CN(B,F)003	0.96	0.93	
FV4CNF002	0.97	0.94	
FX4CNF024	0.98	0.97	
FX4CNF030	0.98	0.94	
FX4DN(B,F)031	0.99	0.95	
FX4DN(B,F)037	0.96	0.89	
FX4DNF025	0.99	0.96	
FY5BNF024	1.00	1.00	
FY5BNF030	0.99	0.98	
CAP**2414A**	0.96	0.97	58CV(A,X)070−12
CAP**3014A**	0.96	0.96	58CV(A,X)070−12
CNPH*2417A**	0.97	0.96	58CV(A,X)070−12
CNPH*3017A**	0.97	0.97	58CV(A,X)070−12
CNPH*3117A**	0.98	0.93	58CV(A,X)070−12
CNPV*2414A**	0.97	0.96	58CV(A,X)070−12
CNPV*3014A**	0.96	0.96	58CV(A,X)070−12
CSPH*2412A**	0.97	0.97	58CV(A,X)070−12
CSPH*3012A**	0.96	0.96	58CV(A,X)070−12
CAP**2417A**	0.96	0.96	58CV(A,X)090−16
CAP**3017A**	0.96	0.95	58CV(A,X)090−16
CNPH*2417A**	0.97	0.95	58CV(A,X)090−16
CNPH*3017A**	0.97	0.96	58CV(A,X)090−16
CNPH*3117A**	0.97	0.92	58CV(A,X)090−16
CNPV*2417A**	0.97	0.95	58CV(A,X)090−16
CNPV*3017A**	0.96	0.95	58CV(A,X)090−16
CNPV*3117A**	0.97	0.92	58CV(A,X)090−16
CSPH*2412A**	0.97	0.96	58CV(A,X)090−16
CSPH*3012A**	0.96	0.95	58CV(A,X)090−16
CNPH*2417A**	0.97	0.96	58CV(A,X)110−20
CNPH*3017A**	0.97	0.96	58CV(A,X)110−20
CNPH*3117A**	0.98	0.92	58CV(A,X)110−20
CSPH*2412A**	0.98	0.97	58CV(A,X)110−20

HEATING INDOOR MODEL	CAPACITY	POWER	FURNACE MODEL
CSPH*3012A**	0.97	0.96	58CV(A,X)110−20
CNPH*2417A**	0.97	0.96	58CV(A,X)135−22
CNPH*3017A**	0.97	0.96	58CV(A,X)135−22
CNPH*3117A**	0.97	0.92	58CV(A,X)135−22
CSPH*2412A**	0.98	0.97	58CV(A,X)135−22
CSPH*3012A**	0.97	0.96	58CV(A,X)135−22
CNPH*2417A**	0.97	0.96	58CV(A,X)155−22
CNPH*3017A**	0.97	0.96	58CV(A,X)155−22
CNPH*3117A**	0.97	0.91	58CV(A,X)155−22
CSPH*2412A**	0.97	0.96	58CV(A,X)155−22
CSPH*3012A**	0.97	0.96	58CV(A,X)155−22
CNPH*2417A**	0.98	0.97	58HDV040−−12
CNPH*3017A**	0.99	0.97	58HDV040−−12
CNPH*3117A**	0.98	0.92	58HDV040−−12
CSPH*2412A**	0.98	0.97	58HDV040−−12
CSPH*3012A**	0.98	0.96	58HDV040−−12
CNPH*2417A**	0.99	0.97	58HDV060−−12
CNPH*3017A**	0.99	0.95	58HDV060−−12
CNPH*3117A**	0.98	0.91	58HDV060−−12
CSPH*2412A**	0.99	0.97	58HDV060−−12
CSPH*3012A**	0.99	0.95	58HDV060−−12
CNPH*2417A**	1.00	0.95	58HDV080−−20
CNPH*3017A**	0.99	0.92	58HDV080−−20
CNPH*3117A**	0.97	0.89	58HDV080−−20
CSPH*2412A**	0.99	0.94	58HDV080−−20
CSPH*3012A**	0.99	0.93	58HDV080−−20
CNPH*2417A**	0.99	0.95	58HDV100−−20
CNPH*3017A**	0.99	0.93	58HDV100−−20
CNPH*3117A**	0.96	0.88	58HDV100−−20
CSPH*2412A**	0.99	0.95	58HDV100−−20
CSPH*3012A**	0.99	0.93	58HDV100−−20
CAP**2417A**	0.98	0.94	58ME(B,C)060−12
CAP**3017A**	0.98	0.92	58ME(B,C)060−12
CNPH*2417A**	0.98	0.94	58ME(B,C)060−12
CNPH*3017A**	0.98	0.92	58ME(B,C)060−12
CNPH*3117A**	0.97	0.89	58ME(B,C)060−12
CNPV*2417A**	0.98	0.94	58ME(B,C)060−12
CNPV*3017A**	0.98	0.92	58ME(B,C)060−12
CNPV*3117A**	0.97	0.89	58ME(B,C)060−12
CSPH*2412A**	0.98	0.94	58ME(B,C)060−12
CSPH*3012A**	0.98	0.93	58ME(B,C)060−12
CAP**2417A**	0.98	0.95	58ME(B,C)080−12
CAP**3017A**	0.98	0.94	58ME(B,C)080−12
CNPH*2417A**	0.98	0.95	58ME(B,C)080−12

HEATING INDOOR MODEL	CAPACITY	POWER	FURNACE MODEL
CNPH*3017A**	0.98	0.94	58ME(B,C)080−12
CNPH*3117A**	0.97	0.89	58ME(B,C)080−12
CNPV*2417A**	0.98	0.95	58ME(B,C)080−12
CNPV*3017A**	0.98	0.94	58ME(B,C)080−12
CNPV*3117A**	0.97	0.89	58ME(B,C)080−12
CSPH*2412A**	0.98	0.95	58ME(B,C)080−12
CSPH*3012A**	0.98	0.94	58ME(B,C)080−12
CAP**2417A**	0.98	0.94	58MEB040−12
CAP**3017A**	0.98	0.93	58MEB040−12
CNPH*2417A**	0.98	0.94	58MEB040−12
CNPH*3017A**	0.98	0.93	58MEB040−12
CNPH*3117A**	0.97	0.89	58MEB040−12
CNPV*2417A**	0.98	0.94	58MEB040−12
CNPV*3017A**	0.98	0.93	58MEB040−12
CNPV*3117A**	0.97	0.89	58MEB040−12
CSPH*2412A**	0.98	0.95	58MEB040−12
CSPH*3012A**	0.98	0.93	58MEB040−12
CAP**2417A**	0.97	0.95	58MV(B,C)060−14
CAP**3017A**	0.97	0.94	58MV(B,C)060−14
CNPH*2417A**	0.98	0.95	58MV(B,C)060−14
CNPH*3017A**	0.98	0.95	58MV(B,C)060−14
CNPH*3117A**	0.98	0.91	58MV(B,C)060−14
CNPV*2417A**	0.98	0.95	58MV(B,C)060−14
CNPV*3017A**	0.98	0.95	58MV(B,C)060−14
CNPV*3117A**	0.97	0.90	58MV(B,C)060−14
CSPH*2412A**	0.98	0.95	58MV(B,C)060−14
CSPH*3012A**	0.98	0.95	58MV(B,C)060−14
CNPH*2417A**	0.97	0.96	58MV(B,C)080−14
CNPH*3017A**	0.97	0.97	58MV(B,C)080−14
CNPH*3117A**	0.97	0.92	58MV(B,C)080−14
CSPH*2412A**	0.97	0.96	58MV(B,C)080−14
CSPH*3012A**	0.96	0.96	58MV(B,C)080−14
CNPH*2417A**	0.96	0.97	58MV(B,C)080−20
CNPH*3017A**	0.96	0.97	58MV(B,C)080−20
CNPH*3117A**	0.97	0.94	58MV(B,C)080−20
CSPH*2412A**	0.96	0.97	58MV(B,C)080−20
CSPH*3012A**	0.96	0.97	58MV(B,C)080−20
CNPH*2417A**	0.97	0.96	58MV(B,C)100−20
CNPH*3017A**	0.96	0.95	58MV(B,C)100−20
CNPH*3117A**	0.97	0.92	58MV(B,C)100−20
CSPH*2412A**	0.97	0.96	58MV(B,C)100−20
CSPH*3012A**	0.96	0.95	58MV(B,C)100−20
CNPH*2417A**	0.98	0.96	58MV(B,C)120−20
CNPH*3017A**	0.97	0.95	58MV(B,C)120−20

HEAT PUMP HEATING PERFORMANCE CONTINUED

25HBC324(A,W)30 Outdoor Section With FY5BNF024 Indoor Section**

HEATING INDOOR MODEL	CAPACITY	POWER	FURNACE MODEL
CNPH*3117A**	0.98	0.92	58MV(B,C)120–20
CSPH*2412A**	0.98	0.96	58MV(B,C)120–20
CSPH*3012A**	0.97	0.95	58MV(B,C)120–20
CNPH*2417A**	0.97	0.96	58MVB040–14
CNPH*3017A**	0.97	0.96	58MVB040–14
CNPH*3117A**	0.98	0.93	58MVB040–14
CSPH*2412A**	0.98	0.97	58MVB040–14
CSPH*3012A**	0.97	0.96	58MVB040–14
CAP**2414A**	0.98	0.97	58PH*045–08
CAP**3014A**	0.98	0.96	58PH*045–08
CNPH*2417A**	0.97	0.96	58PH*045–08
CNPH*3017A**	0.98	0.96	58PH*045–08
CNPH*3117A**	0.98	0.92	58PH*045–08
CNPV*2414A**	0.98	0.96	58PH*045–08
CNPV*3014A**	0.98	0.97	58PH*045–08
CSPH*2412A**	0.98	0.97	58PH*045–08
CSPH*3012A**	0.98	0.96	58PH*045–08
CAP**2417A**	0.96	0.94	58VLR105–12
CAP**3017A**	0.96	0.94	58VLR105–12
CNPH*2417A**	0.96	0.93	58VLR105–12
CNPH*3017A**	0.96	0.94	58VLR105–12
CNPH*3117A**	0.96	0.90	58VLR105–12
CNPV*2417A**	0.96	0.93	58VLR105–12
CNPV*3017A**	0.96	0.94	58VLR105–12
CNPV*3117A**	0.96	0.90	58VLR105–12
CSPH*2412A**	0.96	0.93	58VLR105–12
CSPH*3012A**	0.96	0.94	58VLR105–12
CAP**2417A**	0.96	0.97	58VMR105–12
CAP**3017A**	0.96	0.96	58VMR105–12
CNPH*2417A**	0.96	0.96	58VMR105–12
CNPH*3017A**	0.96	0.96	58VMR105–12
CNPH*3117A**	0.96	0.91	58VMR105–12
CNPV*2417A**	0.96	0.96	58VMR105–12
CNPV*3017A**	0.96	0.96	58VMR105–12
CNPV*3117A**	0.96	0.91	58VMR105–12
CSPH*2412A**	0.96	0.96	58VMR105–12
CSPH*3012A**	0.96	0.96	58VMR105–12

See notes on page 69

HEAT PUMP HEATING PERFORMANCE CONTINUED

INDOOR AIR		OUTDOOR COIL ENTERING AIR TEMPERATURES ° F (° C)																							
		−3 (−19.4)			7 (−13.9)			17 (−8.3)			27 (−2.8)			37 (2.8)			47 (8.3)			57 (13.9)			67 (19.4)		
EDB ° F (° C)	CFM	Capacity MBtuh		Total Syst. KW†	Capacity MBtuh		Total Syst. KW†	Capacity MBtuh		Total Syst. KW†	Capacity MBtuh		Total Syst. KW†	Capacity MBtuh		Total Syst. KW†	Capacity MBtuh		Total Syst. KW†	Capacity MBtuh		Total Syst. KW†	Capacity MBtuh		Total Syst. KW†
		Total	Integ*		Total	Integ*		Total	Integ*		Total	Integ*		Total	Integ*		Total	Integ*		Total	Integ*		Total	Integ*	
25HBC330(A,W)**30 Outdoor Section With FY5BNF030 Indoor Section																									
65 (18.3)	875	10.66	9.81	1.95	13.93	12.80	2.03	17.48	15.94	2.12	21.91	19.46	2.23	25.79	23.46	2.33	30.02	30.02	2.44	34.68	34.68	2.56	39.00	39.00	2.66
	1000	10.85	9.99	1.96	14.17	13.02	2.04	17.77	16.20	2.12	22.21	19.73	2.22	26.14	23.79	2.31	30.40	30.40	2.41	35.02	35.02	2.50	39.03	39.03	2.59
	1125	11.05	10.17	1.99	14.39	13.23	2.06	18.03	16.44	2.13	22.47	19.95	2.22	26.45	24.07	2.30	30.78	30.78	2.39	35.18	35.18	2.47	38.91	38.91	2.54
70 (21.1)	875	10.18	9.37	2.02	13.45	12.36	2.12	16.99	15.49	2.21	21.50	19.10	2.32	25.39	23.10	2.43	29.57	29.57	2.55	34.17	34.17	2.67	38.54	38.54	2.77
	1000	10.40	9.57	2.04	13.71	12.59	2.13	17.29	15.77	2.21	21.82	19.38	2.31	25.73	23.41	2.40	30.00	30.00	2.51	34.56	34.56	2.61	38.60	38.60	2.70
	1125	10.60	9.75	2.07	13.93	12.81	2.14	17.56	16.01	2.22	22.09	19.62	2.31	26.05	23.70	2.40	30.34	30.34	2.49	34.77	34.77	2.57	38.53	38.53	2.65
75 (23.9)	875	9.67	8.90	2.11	12.95	11.90	2.20	16.48	15.03	2.29	20.43	18.14	2.40	25.00	22.75	2.54	29.10	29.10	2.66	33.66	33.66	2.78	38.06	38.06	2.89
	1000	9.89	9.10	2.13	13.20	12.13	2.21	16.78	15.30	2.30	20.85	18.52	2.39	25.32	23.04	2.51	29.52	29.52	2.62	34.08	34.08	2.72	38.16	38.16	2.81
	1125	10.09	9.28	2.15	13.43	12.34	2.23	17.05	15.54	2.31	21.26	18.89	2.40	25.63	23.32	2.50	29.88	29.88	2.60	34.34	34.34	2.68	38.11	38.11	2.76

HEATING INDOOR MODEL	CAPACITY	POWER	FURNACE MODEL
*FY5BNF030	1.00	1.00	
FB4CNF030	1.00	1.00	
FB4CNF030	1.00	1.00	
FB4CNF036	1.00	1.00	
FB4CNF036	1.00	1.00	
FE4AN(B,F)003	0.97	0.97	
FE4AN(B,F)005	0.97	0.92	
FE4ANF002	0.97	0.97	
FF1ENP031	0.99	0.99	
FF1ENP037	1.00	1.00	
FV4BN(B,F)003	0.97	0.97	
FV4BN(B,F)005	0.97	0.91	
FV4BNF002	0.97	0.97	
FV4CN(B,F)003	0.97	0.97	
FV4CN(B,F)005	0.97	0.91	
FV4CNF002	0.97	0.97	
FX4CN(B,F)036	0.97	0.97	
FX4CNF030	0.97	0.97	
FX4DN(B,F)031	0.97	0.95	
FX4DN(B,F)037	1.00	0.95	
FY5BNF030	1.00	1.00	
CAP**3014A**	0.97	1.00	58CV(A,X)070–12
CAP**3614A**	0.97	0.99	58CV(A,X)070–12
CNPH*3017A**	0.97	0.99	58CV(A,X)070–12
CNPH*3117A**	0.97	0.95	58CV(A,X)070–12
CNPH*3617A**	0.97	0.99	58CV(A,X)070–12
CNPV*3014A**	0.97	1.00	58CV(A,X)070–12
CSPH*3012A**	0.97	0.99	58CV(A,X)070–12
CSPH*3612A**	0.97	0.96	58CV(A,X)070–12
CAP**3017A**	0.97	0.99	58CV(A,X)090–16
CAP**3617A**	0.97	0.98	58CV(A,X)090–16
CNPH*3017A**	0.97	0.99	58CV(A,X)090–16
CNPH*3117A**	0.97	0.95	58CV(A,X)090–16
CNPH*3617A**	0.97	0.99	58CV(A,X)090–16
CNPV*3017A**	0.97	0.99	58CV(A,X)090–16
CNPV*3117A**	0.97	0.95	58CV(A,X)090–16
CNPV*3617A**	0.97	0.99	58CV(A,X)090–16
CNPV*3717A**	0.97	0.92	58CV(A,X)090–16
CSPH*3012A**	0.97	0.99	58CV(A,X)090–16
CSPH*3612A**	0.97	0.96	58CV(A,X)090–16
CAP**3621A**	0.97	0.98	58CV(A,X)110–20
CNPH*3017A**	0.97	0.98	58CV(A,X)110–20
CNPH*3117A**	0.97	0.94	58CV(A,X)110–20
CNPH*3617A**	0.97	0.98	58CV(A,X)110–20

HEATING INDOOR MODEL	CAPACITY	POWER	FURNACE MODEL
CNPV*3621A**	0.97	0.98	58CV(A,X)110–20
CSPH*3012A**	0.97	0.98	58CV(A,X)110–20
CSPH*3612A**	0.97	0.95	58CV(A,X)110–20
CNPH*3017A**	0.97	0.98	58CV(A,X)135–22
CNPH*3117A**	0.97	0.94	58CV(A,X)135–22
CNPH*3617A**	0.97	0.98	58CV(A,X)135–22
CSPH*3012A**	0.97	0.98	58CV(A,X)135–22
CSPH*3612A**	0.97	0.95	58CV(A,X)135–22
CNPH*3017A**	0.97	0.98	58CV(A,X)155–22
CNPH*3117A**	0.97	0.94	58CV(A,X)155–22
CNPH*3617A**	0.97	0.98	58CV(A,X)155–22
CSPH*3012A**	0.97	0.98	58CV(A,X)155–22
CSPH*3612A**	0.97	0.95	58CV(A,X)155–22
CAP**3619A**	0.97	0.99	58HDV040––12
CNPH*3117A**	1.00	0.98	58HDV040––12
CSPH*3612A**	0.97	0.97	58HDV040––12
CAP**3619A**	0.97	0.98	58HDV060––12
CNPH*3017A**	0.97	0.99	58HDV060––12
CNPH*3117A**	1.00	0.96	58HDV060––12
CNPH*3617A**	0.97	0.99	58HDV060––12
CSPH*3012A**	0.97	0.99	58HDV060––12
CSPH*3612A**	1.00	0.98	58HDV060––12
CNPH*3017A**	0.97	0.96	58HDV080––20
CNPH*3117A**	1.00	0.94	58HDV080––20
CNPH*3617A**	0.97	0.96	58HDV080––20
CSPH*3012A**	0.97	0.97	58HDV080––20
CSPH*3612A**	1.00	0.95	58HDV080––20
CNPH*3017A**	0.97	0.97	58HDV100––20
CNPH*3117A**	0.97	0.93	58HDV100––20
CNPH*3617A**	0.97	0.97	58HDV100––20
CSPH*3012A**	0.97	0.98	58HDV100––20
CSPH*3612A**	0.97	0.94	58HDV100––20
CAP**3017A**	0.97	0.96	58ME(B,C)060–12
CAP**3617A**	0.97	0.96	58ME(B,C)060–12
CNPH*3017A**	0.97	0.97	58ME(B,C)060–12
CNPH*3117A**	0.97	0.92	58ME(B,C)060–12
CNPH*3617A**	0.97	0.97	58ME(B,C)060–12
CNPV*3017A**	0.97	0.97	58ME(B,C)060–12
CNPV*3117A**	0.97	0.92	58ME(B,C)060–12
CNPV*3617A**	0.97	0.97	58ME(B,C)060–12
CNPV*3717A**	0.97	0.90	58ME(B,C)060–12
CSPH*3012A**	0.97	0.97	58ME(B,C)060–12
CSPH*3612A**	0.97	0.93	58ME(B,C)060–12
CAP**3017A**	0.97	0.97	58ME(B,C)080–12

HEATING INDOOR MODEL	CAPACITY	POWER	FURNACE MODEL
CAP**3617A**	0.97	0.96	58ME(B,C)080–12
CNPH*3017A**	0.97	0.97	58ME(B,C)080–12
CNPH*3117A**	0.97	0.93	58ME(B,C)080–12
CNPH*3617A**	0.97	0.97	58ME(B,C)080–12
CNPV*3017A**	0.97	0.97	58ME(B,C)080–12
CNPV*3117A**	0.97	0.93	58ME(B,C)080–12
CNPV*3617A**	0.97	0.97	58ME(B,C)080–12
CNPV*3717A**	0.97	0.90	58ME(B,C)080–12
CSPH*3012A**	0.97	0.97	58ME(B,C)080–12
CSPH*3612A**	0.97	0.94	58ME(B,C)080–12
CAP**3017A**	0.97	0.96	58ME(B,C)080–16
CAP**3617A**	0.97	0.95	58ME(B,C)080–16
CNPH*3017A**	0.97	0.96	58ME(B,C)080–16
CNPH*3117A**	1.00	0.94	58ME(B,C)080–16
CNPH*3617A**	0.97	0.96	58ME(B,C)080–16
CNPV*3017A**	0.97	0.96	58ME(B,C)080–16
CNPV*3117A**	0.97	0.91	58ME(B,C)080–16
CNPV*3617A**	0.97	0.96	58ME(B,C)080–16
CNPV*3717A**	0.97	0.89	58ME(B,C)080–16
CSPH*3012A**	0.97	0.96	58ME(B,C)080–16
CSPH*3612A**	0.97	0.92	58ME(B,C)080–16
CAP**3017A**	0.97	0.97	58MEB040–12
CAP**3617A**	0.97	0.96	58MEB040–12
CNPH*3017A**	0.97	0.97	58MEB040–12
CNPH*3117A**	0.97	0.92	58MEB040–12
CNPH*3617A**	0.97	0.97	58MEB040–12
CNPV*3017A**	0.97	0.97	58MEB040–12
CNPV*3117A**	0.97	0.92	58MEB040–12
CNPV*3617A**	0.97	0.97	58MEB040–12
CNPV*3717A**	0.97	0.90	58MEB040–12
CSPH*3012A**	0.97	0.97	58MEB040–12
CSPH*3612A**	0.97	0.93	58MEB040–12
CAP**3017A**	0.97	0.98	58MV(B,C)060–14
CAP**3617A**	0.97	0.97	58MV(B,C)060–14
CNPH*3017A**	0.97	0.98	58MV(B,C)060–14
CNPH*3117A**	0.97	0.94	58MV(B,C)060–14
CNPH*3617A**	0.97	0.98	58MV(B,C)060–14
CNPV*3017A**	0.97	0.98	58MV(B,C)060–14
CNPV*3117A**	0.97	0.94	58MV(B,C)060–14
CNPV*3617A**	0.97	0.98	58MV(B,C)060–14
CNPV*3717A**	0.97	0.91	58MV(B,C)060–14
CSPH*3012A**	0.97	0.98	58MV(B,C)060–14
CSPH*3612A**	0.97	0.95	58MV(B,C)060–14
CAP**3621A**	0.97	0.99	58MV(B,C)080–14

HEAT PUMP HEATING PERFORMANCE CONTINUED

25HBC330(A,W)30 Outdoor Section With FY5BNF030 Indoor Section**

HEATING INDOOR MODEL	CAPACITY	POWER	FURNACE MODEL
CNPH*3017A**	0.97	1.00	58MV(B,C)080–14
CNPH*3117A**	0.97	0.96	58MV(B,C)080–14
CNPH*3617A**	0.97	1.00	58MV(B,C)080–14
CNPV*3621A**	0.97	1.00	58MV(B,C)080–14
CSPH*3012A**	0.97	1.00	58MV(B,C)080–14
CSPH*3612A**	0.97	0.97	58MV(B,C)080–14
CAP**3621A**	0.97	0.98	58MV(B,C)080–20
CNPH*3017A**	0.97	0.99	58MV(B,C)080–20
CNPH*3117A**	0.97	0.95	58MV(B,C)080–20
CNPH*3617A**	0.97	0.99	58MV(B,C)080–20
CNPV*3621A**	0.97	0.99	58MV(B,C)080–20
CSPH*3012A**	0.97	0.99	58MV(B,C)080–20
CSPH*3612A**	0.97	0.96	58MV(B,C)080–20
CAP**3621A**	0.97	1.00	58MV(B,C)100–20
CNPH*3117A**	0.97	0.96	58MV(B,C)100–20
CSPH*3612A**	0.97	0.98	58MV(B,C)100–20
CNPH*3017A**	0.97	0.98	58MV(B,C)120–20
CNPH*3117A**	0.97	0.94	58MV(B,C)120–20
CNPH*3617A**	0.97	0.98	58MV(B,C)120–20
CSPH*3012A**	0.97	0.98	58MV(B,C)120–20
CSPH*3612A**	0.97	0.95	58MV(B,C)120–20
CNPH*3017A**	0.97	1.00	58MVB040–14
CNPH*3117A**	0.97	0.96	58MVB040–14
CNPH*3617A**	0.97	1.00	58MVB040–14
CSPH*3012A**	0.97	0.99	58MVB040–14
CSPH*3612A**	0.97	0.97	58MVB040–14
CAP**3017A**	0.97	0.99	58PH*070–16
CAP**3617A**	0.97	0.98	58PH*070–16
CNPH*3017A**	0.97	0.99	58PH*070–16
CNPH*3117A**	0.97	0.94	58PH*070–16
CNPH*3617A**	0.97	0.99	58PH*070–16
CNPV*3017A**	0.97	0.99	58PH*070–16
CNPV*3117A**	0.97	0.94	58PH*070–16
CNPV*3617A**	0.97	0.99	58PH*070–16
CNPV*3717A**	0.97	0.92	58PH*070–16
CSPH*3012A**	0.97	0.99	58PH*070–16
CSPH*3612A**	0.97	0.95	58PH*070–16
CAP**3621A**	0.97	0.96	58PH*090–16
CNPH*3017A**	0.97	0.98	58PH*090–16
CNPH*3117A**	0.97	0.93	58PH*090–16
CNPH*3617A**	0.97	0.98	58PH*090–16
CNPV*3621A**	0.97	0.98	58PH*090–16
CSPH*3012A**	0.97	0.98	58PH*090–16
CSPH*3612A**	0.97	0.94	58PH*090–16
CAP**3017A**	0.97	0.98	58VLR105–12
CAP**3617A**	0.97	0.97	58VLR105–12
CNPH*3017A**	0.97	0.98	58VLR105–12
CNPH*3117A**	0.97	0.93	58VLR105–12
CNPH*3617A**	0.97	0.98	58VLR105–12
CNPV*3017A**	0.97	0.98	58VLR105–12
CNPV*3117A**	0.97	0.93	58VLR105–12
CNPV*3617A**	0.97	0.98	58VLR105–12
CNPV*3717A**	0.97	0.91	58VLR105–12
CSPH*3012A**	0.97	0.97	58VLR105–12
CSPH*3612A**	0.97	0.94	58VLR105–12
CAP**3617A**	0.97	0.99	58VMR105–12
CNPH*3117A**	0.97	0.96	58VMR105–12
CNPV*3117A**	0.97	0.96	58VMR105–12
CNPV*3717A**	0.97	0.93	58VMR105–12
CSPH*3612A**	0.97	0.97	58VMR105–12

See notes on page 69

HEAT PUMP HEATING PERFORMANCE CONTINUED

INDOOR AIR		OUTDOOR COIL ENTERING AIR TEMPERATURES ° F (° C)																							
		−3 (−19.4)			7 (−13.9)			17 (−8.3)			27 (−2.8)			37 (2.8)			47 (8.3)			57 (13.9)			67 (19.4)		
EDB ° F (° C)	CFM	Capacity MBtuh		Total Syst. KW†	Capacity MBtuh		Total Syst. KW†	Capacity MBtuh		Total Syst. KW†	Capacity MBtuh		Total Syst. KW†	Capacity MBtuh		Total Syst. KW†	Capacity MBtuh		Total Syst. KW†	Capacity MBtuh		Total Syst. KW†	Capacity MBtuh		Total Syst. KW†
		Total	Integ*		Total	Integ*		Total	Integ*		Total	Integ*		Total	Integ*		Total	Integ*		Total	Integ*		Total	Integ*	
25HBC336(A,W)**30 Outdoor Section With FY5BNF036 Indoor Section																									
65 (18.3)	1050	12.22	11.24	2.14	15.87	14.59	2.23	19.91	18.16	2.32	24.91	22.12	2.44	29.28	26.64	2.55	34.06	34.06	2.68	39.66	39.66	2.81	44.77	44.77	2.93
	1200	12.45	11.46	2.16	16.15	14.85	2.24	20.24	18.45	2.33	25.23	22.40	2.44	29.67	27.00	2.54	34.54	34.54	2.65	40.05	40.05	2.76	44.74	44.74	2.87
	1350	12.70	11.68	2.19	16.42	15.09	2.27	20.54	18.73	2.34	25.52	22.67	2.44	29.98	27.28	2.53	34.95	34.95	2.64	40.23	40.23	2.74	44.56	44.56	2.83
70 (21.1)	1050	11.61	10.68	2.23	15.28	14.04	2.33	19.31	17.61	2.42	24.44	21.71	2.55	28.82	26.23	2.66	33.55	33.55	2.80	39.09	39.09	2.93	44.28	44.28	3.06
	1200	11.88	10.93	2.26	15.59	14.33	2.34	19.66	17.92	2.43	24.80	22.03	2.54	29.21	26.58	2.65	34.00	34.00	2.77	39.54	39.54	2.88	44.30	44.30	2.99
	1350	12.10	11.13	2.29	15.84	14.56	2.36	19.96	18.20	2.44	25.11	22.30	2.55	29.54	26.88	2.64	34.40	34.40	2.76	39.78	39.78	2.85	44.18	44.18	2.95
75 (23.9)	1050	10.97	10.09	2.34	14.66	13.47	2.43	18.70	17.05	2.53	23.30	20.69	2.64	28.37	25.81	2.79	33.10	33.10	2.92	38.49	38.49	3.06	43.76	43.76	3.19
	1200	11.22	10.33	2.36	14.96	13.74	2.45	19.05	17.37	2.53	23.84	21.17	2.64	28.73	26.15	2.76	33.49	33.49	2.89	39.00	39.00	3.01	43.82	43.82	3.12
	1350	11.46	10.54	2.39	15.23	13.99	2.47	19.35	17.65	2.55	24.62	21.87	2.66	29.07	26.46	2.76	33.88	33.88	2.87	39.29	39.29	2.97	43.76	43.76	3.07

HEATING INDOOR MODEL	CAPACITY	POWER	FURNACE MODEL
*FY5BNF036	1.00	1.00	
FB4CNF036	1.00	1.00	
FB4CNF036	1.00	1.00	
FB4CNF042	1.00	0.94	
FB4CNF042	1.00	0.94	
FE4AN(B,F)003	0.99	0.97	
FE4AN(B,F)005	0.98	0.91	
FE4ANF002	0.99	0.98	
FF1ENP037	1.00	1.02	
FV4BN(B,F)003	0.97	0.95	
FV4BN(B,F)005	0.98	0.91	
FV4BNF002	0.97	0.96	
FV4CN(B,F)003	0.97	0.95	
FV4CN(B,F)005	0.97	0.90	
FV4CNF002	0.97	0.96	
FX4CN(B,F)036	0.99	0.97	
FX4CN(B,F)042	0.99	0.94	
FX4DN(B,F)037	1.00	0.93	
FX4DN(B,F)043	1.00	0.93	
FY4ANF042	0.99	0.98	
FY5BNF036	1.00	1.00	
FY5BNF042	0.99	0.96	
FY5BNF042	0.99	0.96	
CAP**3614A**	1.00	1.03	
CAP**3617A**	0.99	1.01	
CAP**3619A**	0.99	1.01	
CAP**3621A**	0.99	1.01	
CAP**4221A**	0.99	1.00	
CAP**4224A**	0.99	1.00	
CNPF*3618A**	0.99	1.02	
CNPH*3617A**	0.99	1.02	
CNPH*4221A**	0.99	1.00	
CNPH*4321A**	0.99	0.95	
CNPV*3617A**	0.99	1.02	
CNPV*3621A**	0.99	1.02	
CNPV*3717A**	0.99	0.95	
CNPV*4217A**	0.99	0.98	
CNPV*4221A**	0.99	1.00	
CNPV*4324A**	0.99	0.95	
CSPH*3612A**	0.99	0.98	
CSPH*4212A**	0.99	0.97	
CAP**3614A**	0.99	1.01	58CV(A,X)070−12
CNPH*3617A**	0.97	0.99	58CV(A,X)070−12
CNPH*4221A**	0.97	0.97	58CV(A,X)070−12

HEATING INDOOR MODEL	CAPACITY	POWER	FURNACE MODEL
CNPH*4321A**	0.99	0.93	58CV(A,X)070−12
CSPH*3612A**	0.99	0.97	58CV(A,X)070−12
CSPH*4212A**	0.99	0.96	58CV(A,X)070−12
CAP**3617A**	0.97	0.97	58CV(A,X)090−16
CNPH*3617A**	0.97	0.98	58CV(A,X)090−16
CNPH*4221A**	0.97	0.96	58CV(A,X)090−16
CNPH*4321A**	0.99	0.92	58CV(A,X)090−16
CNPV*3617A**	0.97	0.98	58CV(A,X)090−16
CNPV*3717A**	0.99	0.92	58CV(A,X)090−16
CNPV*4217A**	0.99	0.96	58CV(A,X)090−16
CSPH*3612A**	0.99	0.96	58CV(A,X)090−16
CSPH*4212A**	0.99	0.95	58CV(A,X)090−16
CAP**3621A**	0.97	0.96	58CV(A,X)110−20
CAP**4221A**	0.97	0.95	58CV(A,X)110−20
CNPH*3617A**	0.97	0.98	58CV(A,X)110−20
CNPH*4221A**	0.97	0.95	58CV(A,X)110−20
CNPH*4321A**	0.99	0.91	58CV(A,X)110−20
CNPV*3621A**	0.97	0.97	58CV(A,X)110−20
CNPV*4221A**	0.99	0.97	58CV(A,X)110−20
CSPH*3612A**	0.99	0.95	58CV(A,X)110−20
CSPH*4212A**	0.99	0.94	58CV(A,X)110−20
CAP**4224A**	0.97	0.95	58CV(A,X)135−22
CNPH*3617A**	0.97	0.98	58CV(A,X)135−22
CNPH*4221A**	0.97	0.95	58CV(A,X)135−22
CNPH*4321A**	0.99	0.91	58CV(A,X)135−22
CNPV*4324A**	0.99	0.91	58CV(A,X)135−22
CSPH*3612A**	0.99	0.95	58CV(A,X)135−22
CSPH*4212A**	0.99	0.94	58CV(A,X)135−22
CAP**4224A**	0.97	0.94	58CV(A,X)155−22
CNPH*3617A**	0.97	0.97	58CV(A,X)155−22
CNPH*4221A**	0.97	0.95	58CV(A,X)155−22
CNPH*4321A**	0.99	0.90	58CV(A,X)155−22
CNPV*4324A**	0.99	0.90	58CV(A,X)155−22
CSPH*3612A**	0.99	0.95	58CV(A,X)155−22
CSPH*4212A**	0.99	0.94	58CV(A,X)155−22
CAP**3619A**	0.99	1.02	58HDV040−−12
CNPH*3617A**	0.99	1.03	58HDV040−−12
CNPH*4221A**	0.99	1.00	58HDV040−−12
CNPH*4321A**	0.99	0.95	58HDV040−−12
CSPH*3612A**	0.99	0.99	58HDV040−−12
CSPH*4212A**	0.99	0.97	58HDV040−−12
CAP**3619A**	0.99	1.00	58HDV060−−12
CNPH*3617A**	0.99	1.01	58HDV060−−12
CNPH*4221A**	0.99	0.98	58HDV060−−12

HEATING INDOOR MODEL	CAPACITY	POWER	FURNACE MODEL
CNPH*4321A**	0.99	0.93	58HDV060−−12
CSPH*3612A**	0.99	0.97	58HDV060−−12
CSPH*4212A**	0.99	0.95	58HDV060−−12
CNPH*3617A**	0.99	0.98	58HDV080−−20
CNPH*4221A**	0.99	0.96	58HDV080−−20
CNPH*4321A**	0.99	0.90	58HDV080−−20
CSPH*3612A**	0.99	0.94	58HDV080−−20
CSPH*4212A**	0.99	0.92	58HDV080−−20
CAP**4224A**	0.99	0.95	58HDV100−−20
CNPH*3617A**	0.97	0.97	58HDV100−−20
CNPH*4221A**	0.99	0.96	58HDV100−−20
CNPH*4321A**	0.99	0.90	58HDV100−−20
CNPV*4324A**	0.99	0.90	58HDV100−−20
CSPH*3612A**	0.99	0.94	58HDV100−−20
CSPH*4212A**	0.99	0.93	58HDV100−−20
CAP**3617A**	0.99	0.98	58ME(B,C)060−12
CNPH*3617A**	0.97	0.97	58ME(B,C)060−12
CNPH*4221A**	0.97	0.95	58ME(B,C)060−12
CNPH*4321A**	0.99	0.90	58ME(B,C)060−12
CNPV*3617A**	0.99	0.99	58ME(B,C)060−12
CNPV*3717A**	0.99	0.91	58ME(B,C)060−12
CNPV*4217A**	0.99	0.95	58ME(B,C)060−12
CSPH*3612A**	0.99	0.95	58ME(B,C)060−12
CSPH*4212A**	0.99	0.93	58ME(B,C)060−12
CAP**3617A**	0.99	0.98	58ME(B,C)080−12
CNPH*3617A**	0.97	0.97	58ME(B,C)080−12
CNPH*4221A**	0.97	0.95	58ME(B,C)080−12
CNPH*4321A**	0.99	0.91	58ME(B,C)080−12
CNPV*3617A**	0.97	0.97	58ME(B,C)080−12
CNPV*3717A**	0.99	0.91	58ME(B,C)080−12
CNPV*4217A**	0.99	0.95	58ME(B,C)080−12
CSPH*3612A**	0.99	0.95	58ME(B,C)080−12
CSPH*4212A**	0.99	0.93	58ME(B,C)080−12
CAP**3617A**	0.99	0.98	58ME(B,C)080−16
CNPH*3617A**	0.97	0.97	58ME(B,C)080−16
CNPH*4221A**	0.97	0.95	58ME(B,C)080−16
CNPH*4321A**	0.99	0.91	58ME(B,C)080−16
CNPV*3617A**	0.99	0.99	58ME(B,C)080−16
CNPV*3717A**	0.99	0.91	58ME(B,C)080−16
CNPV*4217A**	0.99	0.95	58ME(B,C)080−16
CSPH*3612A**	0.99	0.95	58ME(B,C)080−16
CSPH*4212A**	0.99	0.93	58ME(B,C)080−16
CAP**3621A**	0.97	0.95	58ME(B,C)100−20
CAP**4221A**	0.97	0.94	58ME(B,C)100−20

HEAT PUMP HEATING PERFORMANCE CONTINUED

25HBC336(A,W)30 Outdoor Section With FY5BNF036 Indoor Section**

HEATING INDOOR MODEL	CAPACITY	POWER	FURNACE MODEL
CNPH*3617A**	0.97	0.97	58ME(B,C)100–20
CNPH*4221A**	0.97	0.95	58ME(B,C)100–20
CNPH*4321A**	0.99	0.90	58ME(B,C)100–20
CNPV*3621A**	0.97	0.97	58ME(B,C)100–20
CNPV*4221A**	0.97	0.95	58ME(B,C)100–20
CSPH*3612A**	0.99	0.95	58ME(B,C)100–20
CSPH*4212A**	0.99	0.93	58ME(B,C)100–20
CAP**3617A**	0.99	0.98	58MEB040–12
CNPH*3617A**	0.97	0.97	58MEB040–12
CNPH*4221A**	0.97	0.95	58MEB040–12
CNPH*4321A**	0.99	0.90	58MEB040–12
CNPV*3617A**	0.97	0.97	58MEB040–12
CNPV*3717A**	0.99	0.91	58MEB040–12
CNPV*4217A**	0.99	0.95	58MEB040–12
CSPH*3612A**	0.99	0.95	58MEB040–12
CSPH*4212A**	0.99	0.93	58MEB040–12
CAP**3617A**	0.99	0.98	58MV(B,C)060–14
CNPH*3617A**	0.99	0.99	58MV(B,C)060–14
CNPH*4221A**	0.99	0.97	58MV(B,C)060–14
CNPH*4321A**	0.99	0.91	58MV(B,C)060–14
CNPV*3617A**	0.99	0.99	58MV(B,C)060–14
CNPV*3717A**	0.99	0.91	58MV(B,C)060–14
CNPV*4217A**	0.99	0.96	58MV(B,C)060–14
CSPH*3612A**	0.99	0.95	58MV(B,C)060–14
CSPH*4212A**	0.99	0.94	58MV(B,C)060–14
CAP**3621A**	0.99	0.99	58MV(B,C)080–14
CAP**4221A**	0.99	0.98	58MV(B,C)080–14
CNPH*3617A**	0.99	1.00	58MV(B,C)080–14
CNPH*4221A**	0.99	0.98	58MV(B,C)080–14
CNPH*4321A**	0.99	0.92	58MV(B,C)080–14
CNPV*3621A**	0.99	1.00	58MV(B,C)080–14
CNPV*4221A**	0.99	0.98	58MV(B,C)080–14
CSPH*3612A**	0.99	0.96	58MV(B,C)080–14
CSPH*4212A**	0.99	0.95	58MV(B,C)080–14
CAP**3621A**	0.97	0.97	58MV(B,C)080–20
CAP**4221A**	0.99	0.98	58MV(B,C)080–20
CNPH*3617A**	0.97	0.98	58MV(B,C)080–20
CNPH*4221A**	0.99	0.98	58MV(B,C)080–20
CNPH*4321A**	0.99	0.92	58MV(B,C)080–20
CNPV*3621A**	0.97	0.98	58MV(B,C)080–20
CNPV*4221A**	0.99	0.98	58MV(B,C)080–20
CSPH*3612A**	0.99	0.96	58MV(B,C)080–20
CSPH*4212A**	0.99	0.95	58MV(B,C)080–20
CAP**3621A**	0.97	0.96	58MV(B,C)100–20
CAP**4221A**	0.99	0.97	58MV(B,C)100–20
CNPH*3617A**	0.99	0.99	58MV(B,C)100–20
CNPH*4221A**	0.97	0.95	58MV(B,C)100–20
CNPH*4321A**	0.99	0.91	58MV(B,C)100–20
CNPV*3621A**	0.99	0.99	58MV(B,C)100–20
CNPV*4221A**	0.99	0.97	58MV(B,C)100–20
CSPH*3612A**	0.99	0.95	58MV(B,C)100–20
CSPH*4212A**	0.99	0.94	58MV(B,C)100–20
CAP**4224A**	0.97	0.95	58MV(B,C)120–20
CNPH*3617A**	0.97	0.98	58MV(B,C)120–20
CNPH*4221A**	0.97	0.96	58MV(B,C)120–20
CNPH*4321A**	0.99	0.91	58MV(B,C)120–20
CNPV*4324A**	0.99	0.91	58MV(B,C)120–20
CSPH*3612A**	0.99	0.96	58MV(B,C)120–20
CSPH*4212A**	0.99	0.95	58MV(B,C)120–20

HEATING INDOOR MODEL	CAPACITY	POWER	FURNACE MODEL
CAP**4224A**	0.99	0.99	58MVB040–14
CNPH*3617A**	0.97	0.99	58MVB040–14
CNPH*4221A**	0.99	0.99	58MVB040–14
CNPH*4321A**	0.99	0.93	58MVB040–14
CNPV*4324A**	0.99	0.93	58MVB040–14
CSPH*3612A**	0.99	0.97	58MVB040–14
CSPH*4212A**	0.99	0.96	58MVB040–14
CAP**3614A**	0.99	1.02	58PH*045–08
CNPH*3617A**	0.99	1.02	58PH*045–08
CNPH*4221A**	0.97	0.98	58PH*045–08
CNPH*4321A**	0.99	0.94	58PH*045–08
CSPH*3612A**	0.99	0.98	58PH*045–08
CSPH*4212A**	0.99	0.96	58PH*045–08
CAP**3617A**	0.99	1.00	58PH*070–16
CNPH*3617A**	0.99	1.01	58PH*070–16
CNPH*4221A**	0.97	0.97	58PH*070–16
CNPH*4321A**	0.99	0.92	58PH*070–16
CNPV*3617A**	0.99	1.01	58PH*070–16
CNPV*3717A**	0.99	0.93	58PH*070–16
CNPV*4217A**	0.99	0.97	58PH*070–16
CSPH*3612A**	0.99	0.97	58PH*070–16
CSPH*4212A**	0.99	0.95	58PH*070–16
CAP**3621A**	0.99	0.97	58PH*090–16
CAP**4221A**	0.99	0.96	58PH*090–16
CNPH*3617A**	0.97	0.97	58PH*090–16
CNPH*4221A**	0.97	0.94	58PH*090–16
CNPH*4321A**	0.99	0.90	58PH*090–16
CNPV*3621A**	0.97	0.97	58PH*090–16
CNPV*4221A**	0.99	0.96	58PH*090–16
CSPH*3612A**	0.99	0.94	58PH*090–16
CSPH*4212A**	0.99	0.93	58PH*090–16
CAP**3621A**	0.99	0.96	58PH*110–20
CAP**4221A**	0.99	0.95	58PH*110–20
CNPH*3617A**	0.97	0.96	58PH*110–20
CNPH*4221A**	0.97	0.94	58PH*110–20
CNPH*4321A**	0.99	0.89	58PH*110–20
CNPV*3621A**	0.97	0.96	58PH*110–20
CNPV*4221A**	0.99	0.95	58PH*110–20
CSPH*3612A**	0.99	0.94	58PH*110–20
CSPH*4212A**	0.99	0.92	58PH*110–20
CAP**3617A**	0.97	0.97	58VLR105–12
CNPH*4221A**	0.97	0.96	58VLR105–12
CNPH*4321A**	0.99	0.92	58VLR105–12
CNPV*3617A**	0.97	0.98	58VLR105–12
CNPV*3717A**	0.99	0.93	58VLR105–12
CNPV*4217A**	0.97	0.94	58VLR105–12
CSPH*3612A**	0.97	0.94	58VLR105–12
CSPH*4212A**	0.97	0.93	58VLR105–12
CAP**3621A**	0.97	0.96	58VLR120–20
CAP**4221A**	0.97	0.95	58VLR120–20
CNPH*3617A**	0.97	0.97	58VLR120–20
CNPH*4221A**	0.97	0.95	58VLR120–20
CNPH*4321A**	0.97	0.90	58VLR120–20
CNPV*3621A**	0.97	0.97	58VLR120–20
CNPV*4221A**	0.97	0.95	58VLR120–20
CSPH*3612A**	0.97	0.94	58VLR120–20
CSPH*4212A**	0.97	0.93	58VLR120–20
CAP**3617A**	0.97	0.99	58VMR105–12
CNPH*4221A**	0.97	0.97	58VMR105–12

HEATING INDOOR MODEL	CAPACITY	POWER	FURNACE MODEL
CNPH*4321A**	0.97	0.92	58VMR105–12
CNPV*3617A**	0.97	1.00	58VMR105–12
CNPV*3717A**	0.97	0.92	58VMR105–12
CNPV*4217A**	0.97	0.96	58VMR105–12
CSPH*3612A**	0.97	0.96	58VMR105–12
CSPH*4212A**	0.97	0.95	58VMR105–12
CAP**3621A**	0.97	0.97	58VMR120–20
CAP**4221A**	0.97	0.96	58VMR120–20
CNPH*3617A**	0.97	0.98	58VMR120–20
CNPH*4221A**	0.97	0.96	58VMR120–20
CNPH*4321A**	0.97	0.91	58VMR120–20
CNPV*3621A**	0.97	0.98	58VMR120–20
CNPV*4221A**	0.97	0.96	58VMR120–20
CSPH*3612A**	0.97	0.95	58VMR120–20
CSPH*4212A**	0.97	0.94	58VMR120–20

See notes on page 69

HEAT PUMP HEATING PERFORMANCE CONTINUED

INDOOR AIR		OUTDOOR COIL ENTERING AIR TEMPERATURES ° F (° C)																							
		−3 (−19.4)			7 (−13.9)			17 (−8.3)			27 (−2.8)			37 (2.8)			47 (8.3)			57 (13.9)			67 (19.4)		
EDB ° F (° C)	CFM	Capacity MBtuh		Total Syst. KW†	Capacity MBtuh		Total Syst. KW†	Capacity MBtuh		Total Syst. KW†	Capacity MBtuh		Total Syst. KW†	Capacity MBtuh		Total Syst. KW†	Capacity MBtuh		Total Syst. KW†	Capacity MBtuh		Total Syst. KW†	Capacity MBtuh		Total Syst. KW†
		Total	Integ*		Total	Integ*		Total	Integ*		Total	Integ*		Total	Integ*		Total	Integ*		Total	Integ*		Total	Integ*	
25HBC342(A,W)**30 Outdoor Section With FY5BNF042 Indoor Section																									
65 (18.3)	1225	14.28	13.14	2.31	18.85	17.32	2.47	23.67	21.58	2.65	28.90	25.67	2.84	35.03	31.88	3.04	40.57	40.57	3.20	47.11	47.11	3.34	54.76	54.76	3.47
	1400	14.56	13.39	2.33	19.17	17.62	2.49	24.06	21.94	2.66	29.37	26.09	2.83	35.50	32.30	3.02	41.16	41.16	3.16	47.83	47.83	3.29	55.61	55.61	3.37
	1575	14.84	13.66	2.35	19.50	17.92	2.51	24.42	22.27	2.68	29.89	26.55	2.84	35.89	32.66	3.02	41.64	41.64	3.15	48.44	48.44	3.26	56.12	56.12	3.31
70 (21.1)	1225	13.55	12.47	2.45	18.12	16.65	2.60	22.95	20.93	2.77	28.13	24.99	2.95	34.46	31.36	3.16	39.94	39.94	3.33	46.35	46.35	3.48	53.87	53.87	3.63
	1400	13.86	12.75	2.47	18.49	16.99	2.62	23.37	21.30	2.78	28.62	25.42	2.95	34.94	31.80	3.15	40.50	40.50	3.30	47.06	47.06	3.43	54.80	54.80	3.53
	1575	14.14	13.00	2.50	18.81	17.29	2.64	23.74	21.64	2.80	29.05	25.80	2.96	35.34	32.16	3.14	40.98	40.98	3.28	47.66	47.66	3.40	55.38	55.38	3.47
75 (23.9)	1225	12.78	11.76	2.60	17.36	15.95	2.74	22.21	20.25	2.90	27.35	24.29	3.08	33.84	30.80	3.30	39.29	39.29	3.47	45.62	45.62	3.63	52.95	52.95	3.81
	1400	13.08	12.03	2.62	17.71	16.28	2.75	22.62	20.62	2.91	27.84	24.73	3.08	34.34	31.25	3.28	39.85	39.85	3.43	46.31	46.31	3.58	53.93	53.93	3.70
	1575	13.35	12.29	2.65	18.04	16.58	2.78	22.98	20.95	2.93	28.27	25.10	3.08	34.76	31.63	3.27	40.31	40.31	3.42	46.89	46.89	3.54	54.60	54.60	3.64

HEATING INDOOR MODEL	CAPACITY	POWER	FURNACE MODEL
*FY5BNF042	1.00	1.00	
FB4CNF042	0.99	0.98	
FB4CNF042	0.99	0.98	
FB4CNF048	0.98	0.96	
FB4CNF048	0.98	0.96	
FE4AN(B,F)003	0.96	0.98	
FE4AN(B,F)005	0.96	0.93	
FE4ANB006	0.96	0.90	
FV4BN(B,F)003	0.96	0.98	
FV4BN(B,F)005	0.96	0.93	
FV4BNB006	0.96	0.90	
FV4CN(B,F)003	0.96	0.98	
FV4CN(B,F)005	0.96	0.93	
FV4CNB006	0.96	0.90	
FX4CN(B,F)042	0.98	0.97	
FX4CN(B,F)048	0.99	0.95	
FX4DN(B,F)043	0.99	0.97	
FX4DN(B,F)049	0.99	0.94	
FY4ANF042	0.99	1.02	
FY4ANF048	0.99	0.99	
FY5BNF042	1.00	1.00	
FY5BNF048	0.99	0.97	
FY5BNF048	0.99	0.97	
CAP**4221A**	1.00	1.03	
CAP**4224A**	0.96	1.00	
CAP**4817A**	1.00	0.99	
CAP**4821A**	0.99	0.99	
CAP**4823A**	0.99	0.99	
CAP**4824A**	0.96	0.97	
CNPF*4818A**	0.96	0.98	
CNPH*4221A**	0.96	0.99	
CNPH*4321A**	0.96	0.95	
CNPH*4821A**	0.99	0.99	
CNPV*4217A**	0.99	1.00	
CNPV*4221A**	0.99	1.02	
CNPV*4324A**	0.99	0.97	
CNPV*4821A**	0.99	0.99	
CNPV*4824A**	0.99	0.99	
CSPH*4212A**	0.96	0.97	
CSPH*4812A**	1.00	1.00	
CNPH*4221A**	0.96	1.00	58CV(A,X)070−12
CNPV*4321A**	0.96	0.95	58CV(A,X)070−12
CNPH*4821A**	0.96	0.97	58CV(A,X)070−12
CSPH*4212A**	0.96	0.97	58CV(A,X)070−12

HEATING INDOOR MODEL	CAPACITY	POWER	FURNACE MODEL
CSPH*4812A**	0.96	0.96	58CV(A,X)070−12
CAP**4817A**	0.96	0.95	58CV(A,X)090−16
CNPH*4221A**	0.96	0.99	58CV(A,X)090−16
CNPH*4321A**	0.96	0.93	58CV(A,X)090−16
CNPH*4821A**	0.96	0.95	58CV(A,X)090−16
CNPV*4217A**	0.96	0.97	58CV(A,X)090−16
CSPH*4212A**	0.96	0.95	58CV(A,X)090−16
CSPH*4812A**	0.96	0.95	58CV(A,X)090−16
CAP**4221A**	0.96	0.98	58CV(A,X)110−20
CAP**4821A**	0.96	0.95	58CV(A,X)110−20
CNPH*4221A**	0.96	0.98	58CV(A,X)110−20
CNPH*4321A**	0.96	0.93	58CV(A,X)110−20
CNPH*4821A**	0.96	0.95	58CV(A,X)110−20
CNPV*4221A**	0.96	0.98	58CV(A,X)110−20
CNPV*4821A**	0.96	0.95	58CV(A,X)110−20
CSPH*4212A**	0.96	0.95	58CV(A,X)110−20
CSPH*4812A**	0.96	0.94	58CV(A,X)110−20
CAP**4224A**	0.96	0.97	58CV(A,X)135−22
CAP**4824A**	0.96	0.94	58CV(A,X)135−22
CNPH*4221A**	0.96	0.98	58CV(A,X)135−22
CNPH*4321A**	0.96	0.92	58CV(A,X)135−22
CNPH*4821A**	0.96	0.94	58CV(A,X)135−22
CNPV*4324A**	0.96	0.92	58CV(A,X)135−22
CNPV*4824A**	0.96	0.94	58CV(A,X)135−22
CSPH*4212A**	0.96	0.94	58CV(A,X)135−22
CSPH*4812A**	0.96	0.94	58CV(A,X)135−22
CAP**4224A**	0.96	0.97	58CV(A,X)155−22
CAP**4824A**	0.96	0.94	58CV(A,X)155−22
CNPH*4221A**	0.96	0.98	58CV(A,X)155−22
CNPH*4321A**	0.96	0.92	58CV(A,X)155−22
CNPH*4821A**	0.96	0.94	58CV(A,X)155−22
CNPV*4324A**	0.96	0.92	58CV(A,X)155−22
CNPV*4824A**	0.96	0.94	58CV(A,X)155−22
CSPH*4212A**	0.96	0.94	58CV(A,X)155−22
CSPH*4812A**	0.96	0.94	58CV(A,X)155−22
CNPH*4221A**	0.96	1.00	58HDV060−−12
CNPH*4321A**	0.99	0.97	58HDV060−−12
CNPH*4821A**	0.96	0.97	58HDV060−−12
CSPH*4212A**	0.96	0.97	58HDV060−−12
CSPH*4812A**	0.99	0.99	58HDV060−−12
CAP**4823A**	0.99	0.97	58HDV080−−20
CNPH*4221A**	0.96	0.98	58HDV080−−20
CNPH*4321A**	0.98	0.93	58HDV080−−20
CNPH*4821A**	0.96	0.94	58HDV080−−20

HEATING INDOOR MODEL	CAPACITY	POWER	FURNACE MODEL
CSPH*4212A**	0.96	0.95	58HDV080−−20
CSPH*4812A**	0.99	0.96	58HDV080−−20
CAP**4224A**	0.96	0.97	58HDV100−−20
CAP**4824A**	0.99	0.97	58HDV100−−20
CNPH*4221A**	0.96	0.98	58HDV100−−20
CNPH*4321A**	0.98	0.94	58HDV100−−20
CNPH*4821A**	0.96	0.95	58HDV100−−20
CNPV*4324A**	0.98	0.93	58HDV100−−20
CNPV*4824A**	0.96	0.95	58HDV100−−20
CSPH*4212A**	0.96	0.95	58HDV100−−20
CSPH*4812A**	0.96	0.94	58HDV100−−20
CAP**4817A**	0.99	0.97	58ME(B,C)060−12
CNPH*4221A**	0.96	0.98	58ME(B,C)060−12
CNPH*4321A**	0.98	0.94	58ME(B,C)060−12
CNPH*4821A**	0.96	0.94	58ME(B,C)060−12
CNPV*4217A**	0.96	0.97	58ME(B,C)060−12
CSPH*4212A**	0.96	0.95	58ME(B,C)060−12
CSPH*4812A**	0.96	0.94	58ME(B,C)060−12
CAP**4817A**	0.99	0.96	58ME(B,C)080−12
CNPH*4221A**	0.96	0.98	58ME(B,C)080−12
CNPH*4321A**	0.98	0.94	58ME(B,C)080−12
CNPH*4821A**	0.96	0.94	58ME(B,C)080−12
CNPV*4217A**	0.96	0.97	58ME(B,C)080−12
CSPH*4212A**	0.96	0.95	58ME(B,C)080−12
CSPH*4812A**	0.96	0.94	58ME(B,C)080−12
CAP**4817A**	0.99	0.97	58ME(B,C)080−16
CNPH*4221A**	0.96	0.99	58ME(B,C)080−16
CNPH*4321A**	0.98	0.94	58ME(B,C)080−16
CNPH*4821A**	0.96	0.95	58ME(B,C)080−16
CNPV*4217A**	0.96	0.97	58ME(B,C)080−16
CSPH*4212A**	0.96	0.95	58ME(B,C)080−16
CSPH*4812A**	0.96	0.95	58ME(B,C)080−16
CAP**4221A**	0.96	0.97	58ME(B,C)100−20
CAP**4821A**	0.96	0.94	58ME(B,C)100−20
CNPH*4221A**	0.96	0.97	58ME(B,C)100−20
CNPH*4321A**	0.98	0.93	58ME(B,C)100−20
CNPH*4821A**	0.96	0.94	58ME(B,C)100−20
CNPV*4221A**	0.96	0.97	58ME(B,C)100−20
CNPV*4821A**	0.96	0.94	58ME(B,C)100−20
CSPH*4212A**	0.96	0.94	58ME(B,C)100−20
CSPH*4812A**	0.96	0.93	58ME(B,C)100−20
CAP**4224A**	0.96	0.96	58ME(B,C)120−20
CAP**4824A**	0.96	0.93	58ME(B,C)120−20
CNPH*4221A**	0.96	0.97	58ME(B,C)120−20

HEAT PUMP HEATING PERFORMANCE CONTINUED

25HBC342(A,W)30 Outdoor Section With FY5BNF042 Indoor Section**

HEATING INDOOR MODEL	CAPACITY	POWER	FURNACE MODEL
CNPH*4321A**	0.98	0.92	58ME(B,C)120–20
CNPH*4821A**	0.96	0.93	58ME(B,C)120–20
CNPV*4324A**	0.98	0.92	58ME(B,C)120–20
CNPV*4824A**	0.96	0.93	58ME(B,C)120–20
CSPH*4212A**	0.96	0.93	58ME(B,C)120–20
CSPH*4812A**	0.96	0.93	58ME(B,C)120–20
CAP**4817A**	0.99	0.96	58MEB040–12
CNPH*4221A**	0.96	0.98	58MEB040–12
CNPH*4321A**	0.98	0.94	58MEB040–12
CNPH*4821A**	0.96	0.94	58MEB040–12
CNPV*4217A**	0.96	0.97	58MEB040–12
CSPH*4212A**	0.96	0.95	58MEB040–12
CSPH*4812A**	0.96	0.94	58MEB040–12
CAP**4817A**	0.99	0.97	58MV(B,C)060–14
CNPH*4221A**	0.96	0.98	58MV(B,C)060–14
CNPH*4321A**	0.96	0.93	58MV(B,C)060–14
CNPH*4821A**	0.96	0.95	58MV(B,C)060–14
CNPV*4217A**	0.96	0.97	58MV(B,C)060–14
CSPH*4212A**	0.96	0.95	58MV(B,C)060–14
CSPH*4812A**	0.98	0.96	58MV(B,C)060–14
CAP**4221A**	0.96	1.00	58MV(B,C)080–14
CAP**4821A**	0.99	1.00	58MV(B,C)080–14
CNPH*4221A**	0.96	1.00	58MV(B,C)080–14
CNPH*4321A**	0.96	0.95	58MV(B,C)080–14
CNPH*4821A**	0.96	0.97	58MV(B,C)080–14
CNPV*4221A**	0.96	1.00	58MV(B,C)080–14
CNPV*4821A**	0.96	0.97	58MV(B,C)080–14
CSPH*4212A**	0.96	0.97	58MV(B,C)080–14
CSPH*4812A**	0.98	0.97	58MV(B,C)080–14
CAP**4221A**	0.96	0.99	58MV(B,C)080–20
CAP**4821A**	0.96	0.96	58MV(B,C)080–20
CNPH*4221A**	0.96	0.99	58MV(B,C)080–20
CNPH*4321A**	0.96	0.94	58MV(B,C)080–20
CNPH*4821A**	0.96	0.96	58MV(B,C)080–20
CNPV*4221A**	0.96	0.99	58MV(B,C)080–20
CNPV*4821A**	0.96	0.96	58MV(B,C)080–20
CSPH*4212A**	0.96	0.96	58MV(B,C)080–20
CSPH*4812A**	0.98	0.97	58MV(B,C)080–20
CAP**4221A**	0.96	1.00	58MV(B,C)100–20
CAP**4821A**	0.96	0.97	58MV(B,C)100–20
CNPH*4221A**	0.96	1.00	58MV(B,C)100–20
CNPH*4321A**	0.96	0.95	58MV(B,C)100–20
CNPH*4821A**	0.96	0.97	58MV(B,C)100–20
CNPV*4221A**	0.96	1.00	58MV(B,C)100–20
CNPV*4821A**	0.96	0.97	58MV(B,C)100–20
CSPH*4212A**	0.96	0.97	58MV(B,C)100–20
CSPH*4812A**	0.96	0.96	58MV(B,C)100–20
CAP**4224A**	0.96	0.98	58MV(B,C)120–20
CAP**4824A**	0.96	0.95	58MV(B,C)120–20
CNPH*4221A**	0.96	0.99	58MV(B,C)120–20
CNPH*4321A**	0.96	0.93	58MV(B,C)120–20
CNPH*4821A**	0.96	0.95	58MV(B,C)120–20
CNPV*4324A**	0.96	0.93	58MV(B,C)120–20
CNPV*4824A**	0.96	0.95	58MV(B,C)120–20
CSPH*4212A**	0.96	0.95	58MV(B,C)120–20
CSPH*4812A**	0.96	0.95	58MV(B,C)120–20
CAP**4224A**	0.96	1.00	58MVB040–14
CAP**4824A**	0.96	0.97	58MVB040–14
CNPH*4221A**	0.96	1.00	58MVB040–14

HEATING INDOOR MODEL	CAPACITY	POWER	FURNACE MODEL
CNPH*4321A**	0.96	0.95	58MVB040–14
CNPH*4821A**	0.96	0.97	58MVB040–14
CNPV*4324A**	0.98	0.96	58MVB040–14
CNPV*4824A**	0.96	0.97	58MVB040–14
CSPH*4212A**	0.96	0.97	58MVB040–14
CSPH*4812A**	0.96	0.97	58MVB040–14
CAP**4817A**	0.99	0.99	58PH*070–16
CNPH*4221A**	0.96	1.00	58PH*070–16
CNPH*4321A**	0.98	0.96	58PH*070–16
CNPH*4821A**	0.96	0.97	58PH*070–16
CNPV*4217A**	0.96	0.99	58PH*070–16
CSPH*4212A**	0.96	0.97	58PH*070–16
CSPH*4812A**	0.99	0.99	58PH*070–16
CAP**4221A**	0.96	0.98	58PH*090–16
CAP**4821A**	0.96	0.95	58PH*090–16
CNPH*4221A**	0.96	0.98	58PH*090–16
CNPH*4321A**	0.98	0.94	58PH*090–16
CNPH*4821A**	0.96	0.94	58PH*090–16
CNPV*4221A**	0.96	0.98	58PH*090–16
CNPV*4821A**	0.96	0.94	58PH*090–16
CSPH*4212A**	0.96	0.95	58PH*090–16
CSPH*4812A**	0.96	0.94	58PH*090–16
CAP**4221A**	0.96	0.97	58PH*110–20
CAP**4821A**	0.96	0.94	58PH*110–20
CNPH*4221A**	0.96	0.98	58PH*110–20
CNPH*4321A**	0.98	0.93	58PH*110–20
CNPH*4821A**	0.96	0.94	58PH*110–20
CNPV*4221A**	0.96	0.98	58PH*110–20
CNPV*4821A**	0.96	0.94	58PH*110–20
CSPH*4212A**	0.96	0.94	58PH*110–20
CSPH*4812A**	0.96	0.94	58PH*110–20
CAP**4224A**	0.96	0.97	58PH*135–20
CAP**4824A**	0.96	0.94	58PH*135–20
CNPH*4221A**	0.96	0.98	58PH*135–20
CNPH*4321A**	0.98	0.93	58PH*135–20
CNPH*4821A**	0.96	0.94	58PH*135–20
CNPV*4324A**	0.98	0.93	58PH*135–20
CNPV*4824A**	0.96	0.94	58PH*135–20
CSPH*4212A**	0.96	0.95	58PH*135–20
CSPH*4812A**	0.96	0.94	58PH*135–20
CAP**4221A**	0.96	0.98	58VLR120–20
CAP**4821A**	0.96	0.96	58VLR120–20
CNPH*4221A**	0.96	0.98	58VLR120–20
CNPH*4321A**	0.96	0.93	58VLR120–20
CNPH*4821A**	0.96	0.95	58VLR120–20
CNPV*4221A**	0.96	0.98	58VLR120–20
CNPV*4821A**	0.96	0.95	58VLR120–20
CSPH*4212A**	0.96	0.95	58VLR120–20
CSPH*4812A**	0.96	0.95	58VLR120–20
CAP**4221A**	0.96	0.99	58VMR120–20
CAP**4821A**	0.96	0.96	58VMR120–20
CNPH*4221A**	0.96	0.99	58VMR120–20
CNPH*4321A**	0.96	0.94	58VMR120–20
CNPH*4821A**	0.96	0.96	58VMR120–20
CNPV*4221A**	0.96	0.99	58VMR120–20
CNPV*4821A**	0.96	0.96	58VMR120–20
CSPH*4212A**	0.96	0.96	58VMR120–20
CSPH*4812A**	0.96	0.95	58VMR120–20

See notes on page 69

HEAT PUMP HEATING PERFORMANCE CONTINUED

INDOOR AIR		OUTDOOR COIL ENTERING AIR TEMPERATURES ° F (° C)																							
		−3 (−19.4)			7 (−13.9)			17 (−8.3)			27 (−2.8)			37 (2.8)			47 (8.3)			57 (13.9)			67 (19.4)		
EDB ° F (° C)	CFM	Capacity MBtuh Total	Capacity MBtuh In-teg*	Total Syst. KW†	Capacity MBtuh Total	Capacity MBtuh In-teg*	Total Syst. KW†	Capacity MBtuh Total	Capacity MBtuh In-teg*	Total Syst. KW†	Capacity MBtuh Total	Capacity MBtuh In-teg*	Total Syst. KW†	Capacity MBtuh Total	Capacity MBtuh In-teg*	Total Syst. KW†	Capacity MBtuh Total	Capacity MBtuh In-teg*	Total Syst. KW†	Capacity MBtuh Total	Capacity MBtuh In-teg*	Total Syst. KW†	Capacity MBtuh Total	Capacity MBtuh In-teg*	Total Syst. KW†
25HBC348(A,W)**30 Outdoor Section With FY5BNF048 Indoor Section																									
65 (18.3)	1400	18.01	16.57	2.89	23.17	21.29	3.02	28.77	26.24	3.15	34.99	31.08	3.31	40.92	37.24	3.46	47.57	47.57	3.64	55.35	55.35	3.86	64.45	64.45	4.06
	1600	18.33	16.87	2.93	23.54	21.63	3.04	29.21	26.63	3.16	35.44	31.47	3.31	41.47	37.74	3.45	48.24	48.24	3.61	56.20	56.20	3.81	65.10	65.10	3.97
	1800	18.63	17.14	2.98	23.89	21.95	3.08	29.72	27.10	3.19	35.82	31.82	3.32	41.94	38.17	3.45	48.82	48.82	3.60	56.97	56.97	3.75	65.45	65.45	3.92
70 (21.1)	1400	17.39	16.00	3.01	22.53	20.71	3.13	28.06	25.59	3.27	34.53	30.67	3.45	40.31	36.68	3.61	46.82	46.82	3.79	54.47	54.47	4.02	63.50	63.50	4.24
	1600	17.74	16.32	3.05	22.93	21.07	3.16	28.53	26.01	3.29	34.96	31.05	3.45	40.85	37.18	3.59	47.50	47.50	3.76	55.30	55.30	3.97	64.25	64.25	4.15
	1800	18.06	16.61	3.09	23.29	21.40	3.20	28.95	26.39	3.32	35.34	31.39	3.46	41.33	37.61	3.60	48.07	48.07	3.75	56.03	56.03	3.93	64.64	64.64	4.10
75 (23.9)	1400	16.69	15.35	3.14	21.84	20.07	3.26	27.33	24.92	3.41	34.05	30.24	3.59	39.73	36.15	3.76	46.10	46.10	3.96	53.61	53.61	4.19	62.53	62.53	4.43
	1600	17.05	15.69	3.18	22.25	20.45	3.29	27.80	25.35	3.42	34.50	30.64	3.59	40.25	36.63	3.75	46.76	46.76	3.92	54.42	54.42	4.14	63.37	63.37	4.33
	1800	17.37	15.98	3.22	22.61	20.77	3.33	28.22	25.73	3.45	34.89	30.98	3.60	40.71	37.05	3.75	47.31	47.31	3.91	55.09	55.09	4.11	63.82	63.82	4.28

HEATING INDOOR MODEL	CAPACITY	POWER	FURNACE MODEL
*FY5BNF048	1.00	1.00	
FB4CNF048	0.97	0.99	
FB4CNF048	0.97	0.99	
FB4CNF060	0.99	0.98	
FB4CNF060	0.99	0.98	
FE4AN(B,F)005	0.97	0.96	
FE4ANB006	0.97	0.93	
FV4BN(B,F)005	0.97	0.96	
FV4BNB006	0.97	0.93	
FV4CN(B,F)005	0.97	0.96	
FV4CNB006	0.97	0.93	
FX4CN(B,F)048	1.00	0.99	
FX4CN(B,F)060	1.00	0.96	
FX4DN(B,F)049	0.97	0.95	
FX4DN(B,F)061	1.00	0.95	
FY4ANB060	1.01	1.02	
FY4ANF048	1.00	1.03	
FY5BNB060	1.00	1.01	
FY5BNF048	1.00	1.00	
CAP**4817A**	1.00	1.03	
CAP**4821A**	1.00	1.02	
CAP**4823A**	1.00	1.02	
CAP**4824A**	1.00	1.02	
CAP**6021A**	1.00	1.01	
CAP**6024A**	1.00	1.01	
CAP**6025A**	1.00	1.01	
CNPH*4821A**	1.00	1.02	
CNPH*6024A**	1.00	1.01	
CNPH*6124A**	1.00	1.00	
CNPV*4821A**	1.00	1.02	
CNPV*4824A**	1.00	1.02	
CNPV*6024A**	1.00	1.01	
CNPV*6124A**	1.00	0.99	
CSPH*4812A**	1.00	1.01	
CSPH*6012A**	1.00	1.00	
CAP**4817A**	0.97	0.99	58CV(A,X)090−16
CNPH*4821A**	0.97	0.99	58CV(A,X)090−16
CNPH*6024A**	0.97	0.98	58CV(A,X)090−16
CNPH*6124A**	0.97	0.97	58CV(A,X)090−16
CSPH*4812A**	0.97	0.99	58CV(A,X)090−16
CSPH*6012A**	0.97	0.97	58CV(A,X)090−16
CAP**4821A**	0.97	0.99	58CV(A,X)110−20
CAP**6021A**	0.97	0.98	58CV(A,X)110−20
CNPH*4821A**	0.97	0.99	58CV(A,X)110−20

HEATING INDOOR MODEL	CAPACITY	POWER	FURNACE MODEL
CNPH*6024A**	0.97	0.98	58CV(A,X)110−20
CNPH*6124A**	0.97	0.97	58CV(A,X)110−20
CNPV*4821A**	0.97	0.99	58CV(A,X)110−20
CSPH*4812A**	0.97	0.98	58CV(A,X)110−20
CSPH*6012A**	0.97	0.97	58CV(A,X)110−20
CAP**4824A**	0.97	0.98	58CV(A,X)135−22
CAP**6024A**	0.97	0.97	58CV(A,X)135−22
CAP**6025A**	0.97	0.97	58CV(A,X)135−22
CNPH*4821A**	0.97	0.98	58CV(A,X)135−22
CNPH*6024A**	0.97	0.97	58CV(A,X)135−22
CNPH*6124A**	0.97	0.96	58CV(A,X)135−22
CNPV*4824A**	0.97	0.98	58CV(A,X)135−22
CNPV*6024A**	0.97	0.97	58CV(A,X)135−22
CNPV*6124A**	0.97	0.94	58CV(A,X)135−22
CSPH*4812A**	0.97	0.97	58CV(A,X)135−22
CSPH*6012A**	0.97	0.96	58CV(A,X)135−22
CAP**4824A**	0.97	0.97	58CV(A,X)155−22
CAP**6024A**	0.97	0.96	58CV(A,X)155−22
CAP**6025A**	0.97	0.96	58CV(A,X)155−22
CNPH*4821A**	0.97	0.97	58CV(A,X)155−22
CNPH*6024A**	0.97	0.96	58CV(A,X)155−22
CNPH*6124A**	0.97	0.95	58CV(A,X)155−22
CNPV*4824A**	0.97	0.97	58CV(A,X)155−22
CNPV*6024A**	0.97	0.96	58CV(A,X)155−22
CNPV*6124A**	0.97	0.94	58CV(A,X)155−22
CSPH*4812A**	0.97	0.97	58CV(A,X)155−22
CSPH*6012A**	0.97	0.95	58CV(A,X)155−22
CAP**4823A**	0.97	0.99	58HDV080−−20
CNPH*4821A**	0.97	0.99	58HDV080−−20
CNPH*6024A**	0.97	0.97	58HDV080−−20
CNPH*6124A**	0.97	0.96	58HDV080−−20
CSPH*4812A**	0.97	0.98	58HDV080−−20
CSPH*6012A**	0.97	0.96	58HDV080−−20
CAP**4824A**	0.97	0.99	58HDV100−−20
CAP**6024A**	0.97	0.97	58HDV100−−20
CAP**6025A**	0.97	0.97	58HDV100−−20
CNPH*4821A**	0.97	0.99	58HDV100−−20
CNPH*6024A**	0.97	0.97	58HDV100−−20
CNPH*6124A**	0.97	0.97	58HDV100−−20
CNPV*4824A**	0.97	0.99	58HDV100−−20
CNPV*6024A**	0.97	0.97	58HDV100−−20
CNPV*6124A**	0.97	0.95	58HDV100−−20
CSPH*4812A**	0.97	0.98	58HDV100−−20
CSPH*6012A**	0.97	0.96	58HDV100−−20

HEATING INDOOR MODEL	CAPACITY	POWER	FURNACE MODEL
CAP**4817A**	0.97	0.98	58ME(B,C)080−16
CNPH*4821A**	0.97	0.99	58ME(B,C)080−16
CNPH*6024A**	0.97	0.98	58ME(B,C)080−16
CNPH*6124A**	0.97	0.97	58ME(B,C)080−16
CSPH*4812A**	0.97	0.98	58ME(B,C)080−16
CSPH*6012A**	0.97	0.96	58ME(B,C)080−16
CAP**4821A**	0.97	0.98	58ME(B,C)100−20
CAP**6021A**	0.97	0.96	58ME(B,C)100−20
CNPH*4821A**	0.97	0.97	58ME(B,C)100−20
CNPH*6024A**	0.97	0.96	58ME(B,C)100−20
CNPH*6124A**	0.97	0.95	58ME(B,C)100−20
CNPV*4821A**	0.97	0.97	58ME(B,C)100−20
CSPH*4812A**	0.97	0.97	58ME(B,C)100−20
CSPH*6012A**	0.97	0.95	58ME(B,C)100−20
CAP**4824A**	0.97	0.97	58ME(B,C)120−20
CAP**6024A**	0.97	0.96	58ME(B,C)120−20
CAP**6025A**	0.97	0.96	58ME(B,C)120−20
CNPH*4821A**	0.97	0.97	58ME(B,C)120−20
CNPH*6024A**	0.97	0.96	58ME(B,C)120−20
CNPH*6124A**	0.97	0.95	58ME(B,C)120−20
CNPV*4824A**	0.97	0.97	58ME(B,C)120−20
CNPV*6024A**	0.97	0.96	58ME(B,C)120−20
CNPV*6124A**	0.97	0.93	58ME(B,C)120−20
CSPH*4812A**	0.97	0.96	58ME(B,C)120−20
CSPH*6012A**	0.97	0.94	58ME(B,C)120−20
CAP**6021A**	0.97	0.99	58MV(B,C)080−20
CNPH*4821A**	0.97	1.00	58MV(B,C)080−20
CNPH*6024A**	0.97	0.99	58MV(B,C)080−20
CNPH*6124A**	0.97	0.98	58MV(B,C)080−20
CNPV*4821A**	0.97	1.00	58MV(B,C)080−20
CSPH*4812A**	0.97	1.00	58MV(B,C)080−20
CSPH*6012A**	0.97	0.98	58MV(B,C)080−20
CAP**4821A**	0.97	1.00	58MV(B,C)100−20
CAP**6021A**	0.97	0.98	58MV(B,C)100−20
CNPH*4821A**	0.97	0.99	58MV(B,C)100−20
CNPH*6024A**	0.97	0.98	58MV(B,C)100−20
CNPH*6124A**	0.97	0.97	58MV(B,C)100−20
CNPV*4821A**	0.97	0.99	58MV(B,C)100−20
CSPH*4812A**	0.97	0.99	58MV(B,C)100−20
CSPH*6012A**	0.97	0.97	58MV(B,C)100−20
CAP**4824A**	0.97	0.99	58MV(B,C)120−20
CAP**6024A**	0.97	0.98	58MV(B,C)120−20
CAP**6025A**	0.97	0.98	58MV(B,C)120−20
CNPH*4821A**	0.97	0.99	58MV(B,C)120−20

HEAT PUMP HEATING PERFORMANCE CONTINUED

25HBC348(A,W)30 Outdoor Section With FY5BNF048 Indoor Section**

HEATING INDOOR MODEL	CAPACITY	POWER	FURNACE MODEL
CNPH*6024A**	0.97	0.98	58MV(B,C)120–20
CNPH*6124A**	0.97	0.97	58MV(B,C)120–20
CNPV*4824A**	0.97	0.99	58MV(B,C)120–20
CNPV*6024A**	0.97	0.98	58MV(B,C)120–20
CNPV*6124A**	0.97	0.95	58MV(B,C)120–20
CSPH*4812A**	0.97	0.98	58MV(B,C)120–20
CSPH*6012A**	0.97	0.97	58MV(B,C)120–20
CNPH*6024A**	0.97	1.01	58PH*070–16
CNPH*6124A**	0.97	1.00	58PH*070–16
CSPH*6012A**	0.97	1.00	58PH*070–16
CAP**4821A**	0.97	0.99	58PH*090–16
CAP**6021A**	0.97	0.97	58PH*090–16
CNPH*4821A**	0.97	0.98	58PH*090–16
CNPH*6024A**	0.97	0.97	58PH*090–16
CNPH*6124A**	0.97	0.96	58PH*090–16
CNPV*4821A**	0.97	0.98	58PH*090–16
CSPH*4812A**	0.97	0.98	58PH*090–16
CSPH*6012A**	0.97	0.96	58PH*090–16
CAP**4821A**	0.97	0.98	58PH*110–20
CAP**6021A**	0.97	0.96	58PH*110–20
CNPH*4821A**	0.97	0.97	58PH*110–20
CNPH*6024A**	0.97	0.96	58PH*110–20
CNPH*6124A**	0.97	0.95	58PH*110–20
CNPV*4821A**	0.97	0.97	58PH*110–20
CSPH*4812A**	0.97	0.97	58PH*110–20
CSPH*6012A**	0.97	0.95	58PH*110–20
CAP**4824A**	0.97	0.98	58PH*135–20
CAP**6024A**	0.97	0.97	58PH*135–20
CAP**6025A**	0.97	0.97	58PH*135–20
CNPH*4821A**	0.97	0.98	58PH*135–20
CNPH*6024A**	0.97	0.96	58PH*135–20
CNPH*6124A**	0.97	0.96	58PH*135–20
CNPV*4824A**	0.97	0.98	58PH*135–20
CNPV*6024A**	0.97	0.96	58PH*135–20
CNPV*6124A**	0.97	0.94	58PH*135–20
CSPH*4812A**	0.97	0.98	58PH*135–20
CSPH*6012A**	0.97	0.95	58PH*135–20
CAP**4821A**	0.97	0.99	58VLR120–20
CAP**6021A**	0.97	0.98	58VLR120–20
CNPH*4821A**	0.97	0.99	58VLR120–20
CNPH*6024A**	0.97	0.97	58VLR120–20
CNPH*6124A**	0.97	0.96	58VLR120–20
CNPV*4821A**	0.97	0.99	58VLR120–20
CSPH*4812A**	0.97	0.98	58VLR120–20
CSPH*6012A**	0.97	0.96	58VLR120–20
CAP**4821A**	0.97	1.00	58VMR120–20
CAP**6021A**	0.97	0.98	58VMR120–20
CNPH*4821A**	0.97	0.99	58VMR120–20
CNPH*6024A**	0.97	0.98	58VMR120–20
CNPH*6124A**	0.97	0.97	58VMR120–20
CNPV*4821A**	0.97	0.99	58VMR120–20
CSPH*4812A**	0.97	0.99	58VMR120–20
CSPH*6012A**	0.97	0.97	58VMR120–20

See notes on page 69

HEAT PUMP HEATING PERFORMANCE CONTINUED

INDOOR AIR		OUTDOOR COIL ENTERING AIR TEMPERATURES ° F (° C)																							
		–3 (–19.4)			7 (–13.9)			17 (–8.3)			27 (–2.8)			37 (2.8)			47 (8.3)			57 (13.9)			67 (19.4)		
EDB ° F (° C)	CFM	Capacity MBtuh		Total Syst. KW†	Capacity MBtuh		Total Syst. KW†	Capacity MBtuh		Total Syst. KW†	Capacity MBtuh		Total Syst. KW†	Capacity MBtuh		Total Syst. KW†	Capacity MBtuh		Total Syst. KW†	Capacity MBtuh		Total Syst. KW†	Capacity MBtuh		Total Syst. KW†
		Total	Integ*		Total	Integ*		Total	Integ*		Total	Integ*		Total	Integ*		Total	Integ*		Total	Integ*		Total	Integ*	
25HBC360(A,W)**30 Outdoor Section With FY5BNB060 Indoor Section																									
65 (18.3)	1750	23.35	21.48	3.51	29.46	27.07	3.70	35.92	32.75	3.90	42.79	38.00	4.11	50.45	45.91	4.37	58.79	58.79	4.58	66.78	66.78	4.84	75.17	75.17	5.14
	2000	23.60	21.71	3.48	29.73	27.32	3.65	36.23	33.04	3.82	43.15	38.33	4.02	51.02	46.42	4.23	58.92	58.92	4.42	66.77	66.77	4.65	73.38	73.38	4.84
	2250	23.80	21.89	3.45	29.95	27.52	3.61	36.48	33.26	3.77	43.46	38.60	3.95	51.44	46.81	4.12	58.87	58.87	4.30	66.41	66.41	4.50	70.16	70.16	4.58
70 (21.1)	1750	22.51	20.71	3.69	28.70	26.38	3.90	35.22	32.11	4.11	42.11	37.40	4.34	49.70	45.22	4.61	58.00	58.00	4.83	65.94	65.94	5.11	74.28	74.28	5.42
	2000	22.76	20.94	3.66	28.98	26.63	3.85	35.54	32.40	4.04	42.47	37.72	4.24	50.15	45.64	4.48	58.24	58.24	4.67	66.06	66.06	4.91	73.33	73.33	5.14
	2250	22.96	21.12	3.63	29.21	26.84	3.81	35.79	32.63	3.98	42.77	37.98	4.17	50.62	46.07	4.37	58.25	58.25	4.55	65.83	65.83	4.76	70.58	70.58	4.88
75 (23.9)	1750	21.62	19.89	3.87	27.90	25.64	4.11	34.46	31.41	4.33	41.41	36.78	4.58	48.93	44.53	4.86	57.19	57.19	5.09	65.09	65.09	5.38	73.35	73.35	5.70
	2000	21.87	20.12	3.84	28.19	25.91	4.05	34.79	31.72	4.26	41.79	37.12	4.48	49.42	44.97	4.73	57.50	57.50	4.92	65.27	65.27	5.18	73.02	73.02	5.44
	2250	22.07	20.31	3.82	28.42	26.12	4.02	35.05	31.96	4.20	42.07	37.37	4.40	49.86	45.37	4.62	57.64	57.64	4.80	65.19	65.19	5.03	70.65	70.65	5.18

HEATING INDOOR MODEL	CAPACITY	POWER	FURNACE MODEL
*FY5BNB060	1.00	1.00	
FB4CNF060	0.99	1.01	
FE4ANB006	0.98	0.94	
FV4BNB006	0.98	0.94	
FX4CN(B,F)048	0.99	1.01	
FX4CN(B,F)060	0.99	0.96	
FX4DN(B,F)061	0.98	0.94	
FY4ANB060	1.00	1.00	
CAP**6021A**	0.99	0.99	
CAP**6024A**	0.99	0.99	
CAP**6025A**	0.99	0.99	
CNPH*6024A**	1.00	1.02	
CNPH*6124A**	0.99	0.98	
CNPV*6024A**	1.00	1.02	
CNPV*6124A**	1.00	0.98	
CSPH*6012A**	1.00	0.99	
CAP**6021A**	0.99	0.99	58CV(A,X)110–20
CNPH*6024A**	0.99	1.01	58CV(A,X)110–20
CNPH*6124A**	0.99	0.99	58CV(A,X)110–20
CSPH*6012A**	1.00	0.99	58CV(A,X)110–20
CAP**6024A**	0.98	0.98	58CV(A,X)135–22
CNPH*6024A**	0.99	1.00	58CV(A,X)135–22

HEATING INDOOR MODEL	CAPACITY	POWER	FURNACE MODEL
CNPH*6124A**	0.98	0.97	58CV(A,X)135–22
CNPV*6024A**	0.99	1.00	58CV(A,X)135–22
CNPV*6124A**	0.99	0.96	58CV(A,X)135–22
CSPH*6012A**	0.99	0.98	58CV(A,X)135–22
CAP**6024A**	0.98	0.97	58CV(A,X)155–22
CNPH*6024A**	0.99	0.99	58CV(A,X)155–22
CNPH*6124A**	0.98	0.96	58CV(A,X)155–22
CNPV*6024A**	0.99	0.99	58CV(A,X)155–22
CNPV*6124A**	0.99	0.95	58CV(A,X)155–22
CSPH*6012A**	0.99	0.97	58CV(A,X)155–22
CNPV*6124A**	1.01	0.99	58HDV100––20
CNPH*6024A**	0.99	1.03	58ME(B,C)080–16
CSPH*6012A**	0.99	1.01	58ME(B,C)080–16
CAP**6021A**	0.98	0.99	58ME(B,C)100–20
CNPH*6024A**	0.99	1.01	58ME(B,C)100–20
CNPH*6124A**	0.98	0.98	58ME(B,C)100–20
CSPH*6012A**	0.99	0.99	58ME(B,C)100–20
CAP**6024A**	0.98	0.98	58ME(B,C)120–20
CNPH*6024A**	0.98	0.99	58ME(B,C)120–20
CNPH*6124A**	0.98	0.97	58ME(B,C)120–20
CNPV*6024A**	0.98	0.99	58ME(B,C)120–20
CNPV*6124A**	0.99	0.96	58ME(B,C)120–20

HEATING INDOOR MODEL	CAPACITY	POWER	FURNACE MODEL
CSPH*6012A**	0.99	0.98	58ME(B,C)120–20
CAP**6021A**	0.99	1.01	58MV(B,C)100–20
CSPH*6012A**	1.00	1.01	58MV(B,C)100–20
CAP**6024A**	0.99	1.01	58MV(B,C)120–20
CNPH*6024A**	1.00	1.03	58MV(B,C)120–20
CNPH*6124A**	0.99	0.99	58MV(B,C)120–20
CNPV*6024A**	1.00	1.03	58MV(B,C)120–20
CNPV*6124A**	1.00	0.99	58MV(B,C)120–20
CSPH*6012A**	1.00	1.01	58MV(B,C)120–20
CAP**6021A**	0.98	0.99	58PH*090–16
CNPH*6024A**	0.99	1.02	58PH*090–16
CSPH*6012A**	0.99	0.99	58PH*090–16
CAP**6021A**	0.98	0.97	58PH*110–20
CNPH*6024A**	0.99	1.00	58PH*110–20
CNPH*6124A**	0.98	0.97	58PH*110–20
CSPH*6012A**	0.99	0.97	58PH*110–20
CAP**6024A**	0.98	0.99	58PH*135–20
CNPH*6024A**	0.99	1.01	58PH*135–20
CNPH*6124A**	0.98	0.98	58PH*135–20
CNPV*6024A**	0.99	1.01	58PH*135–20
CNPV*6124A**	0.99	0.97	58PH*135–20
CSPH*6012A**	0.99	0.98	58PH*135–20

NOTE: When the required data falls between the published data, interpolation may be performed. Extrapolation is not an acceptable practice.

* The Btuh heating capacity values shown are net integrated values from which the defrost effect has been subtracted. The Btuh heating from supplement heaters should be added to those values to obtain total system capacity.

† The kW values include the compressor, outdoor fan motor, and indoor blower motor. The kW from supplement heaters should be added to these values to obtain total system kilowatts.

EDB — Entering Dry Bulb

GUIDE SPECIFICATIONS
GENERAL

System Description

Outdoor-mounted, air-cooled, split-system heat pump unit suitable for ground or rooftop installation. Unit consists of a hermetic compressor, an air-cooled coil, propeller-type condenser fan, and a control box. Unit will discharge supply air upward as shown on contract drawings. Unit will be used in a refrigeration circuit to match up to a packaged fan coil or coil unit.

Quality Assurance

— Unit will be rated in accordance with the latest edition of AHRI Standard 240.

— Unit will be certified for capacity and efficiency, and listed in the latest AHRI directory.

— Unit construction will comply with latest edition of ANSI/ ASHRAE and with NEC.

— Unit will be constructed in accordance with UL standards and will carry the UL label of approval. Unit will have C-UL approval.

— Unit cabinet will be capable of withstanding Federal Test Method Standard No. 141 (Method 6061) 500-hr salt spray test.

— Air-cooled condenser coils are pressure tested and the outdoor unit is leak tested.

— Unit constructed in ISO9001 approved facility.

Delivery, Storage, and Handling

— Unit will be shipped as single package only and is stored and handled per unit manufacturer's recommendations.

Warranty (for inclusion by specifying engineer)

— U.S. and Canada only.

PRODUCTS

Equipment

— Factory assembled, single piece, air-cooled heat pump unit. Contained within the unit enclosure is all factory wiring, piping, controls, compressor, refrigerant charge Puron® (R-410A), and special features required prior to field start-up.

Unit Cabinet

— Unit cabinet will be constructed of galvanized steel, bonderized, and coated with a powder coat paint.

— 3 phase equipment available with dense grille only.

— Single phase equipment available with wide (W) or dense (A) grille option.

Fans

— Condenser fan will be direct-drive propeller type, discharging air upward.

— Condenser fan motors will be totally enclosed, 1-phase type with class B insulation and permanently lubricated bearings.

— Shafts will be corrosion resistant.

— Fan blades will be statically and dynamically balanced.

— Condenser fan openings will be equipped with steel wire safety guards.

Compressor

— Compressor will be hermetically sealed.

— Compressor will be mounted on rubber vibration isolators.

Condenser Coil

— Condenser coil will be air cooled.

— Coil will be constructed of aluminum fins mechanically bonded to copper tubes which are then cleaned, dehydrated, and sealed.

Refrigeration Components

— Refrigeration circuit components will include liquid-line shutoff valve with sweat connections, vapor-line shutoff valve with sweat connections, system charge of Puron® (R-410A) refrigerant, POE compressor oil, accumulator, and reversing valve.

Operating Characteristics

— The capacity of the unit will meet or exceed _____ Btuh at a suction temperature of _____ °F/°C. The power consumption at full load will not exceed _____ kW.

— Combination of the unit and the evaporator or fan coil unit will have a total net cooling capacity of _____ Btuh or greater at conditions of _____ CFM entering air temperature at the evaporator at _____ °F wet bulb and _____ °F/°C dry bulb, and air entering the unit at _____ °F/°C.

— The system will have a SEER of _____ Btuh/watt or greater at DOE conditions.

Electrical Requirements

— Nominal unit electrical characteristics will be _____ v, single phase, 60 hz. The unit will be capable of satisfactory operation within voltage limits of _____ v to _____ v.

— Nominal unit electrical characteristics will be _____ v, three phase, 60 hz. The unit will be capable of satisfactory operation within voltage limits of _____ v to _____ v.

— Unit electrical power will be single point connection.

— Control circuit will be 24v.

Special Features

— Refer to section of this literature identifying accessories and descriptions for specific features and available enhancements.

SYSTEM DESIGN SUMMARY

1. Intended for outdoor installation with free air inlet and outlet. Outdoor fan external static pressure available is less than 0.01-in. wc.
2. Minimum outdoor operating air temperature without low-ambient operation accessory is 55°F (12.8°C).
3. Maximum outdoor operating air temperature for cooling mode is 125°F (51.7°C).
4. Minimum outdoor operating air temperature for heating mode is –30°F (–34.4°C).
5. Maximum outdoor operating air temperature for heating mode is 66°F (18.9°C).
6. For reliable operation, unit should be level in all horizontal planes.
7. For interconnecting refrigerant tube lengths greater than 80 ft (23.4 m) and/or elevation differences between indoor and outdoor units greater than 20 ft (6.1 m), consult Residential Piping and Longline Guideline and Service Manual available from equipment distributor.
8. If any refrigerant tubing is buried, provide a 6 in. (152.4 mm) vertical rise to the valve connections at the unit. Refrigerant tubing lengths up to 36 in. (914.4 mm) may be buried without further consideration. Do not bury refrigerant lines longer than 36 in. (914.4 mm).
9. Use only copper wire for electric connection at unit. Aluminum and clad aluminum are not acceptable for the type of connector provided.
10. Do not apply capillary tube indoor coils to these units.
11. Factory-supplied filter drier must be installed.

Copyright 2010 Carrier Corp. • 7310 W. Morris St. • Indianapolis, IN 46231 Printed in U.S.A. Edition Date: 02/10 **Catalog No:25HBC3 – 1PD**

Manufacturer reserves the right to change, at any time, specifications and designs without notice and without obligations. Replaces: New