37MBRAQ/37MBHAQ
Outdoor Unit Single Zone Ductless System
Sizes 36K, 48K, and 58K

SERVICE MANUAL

TABLE OF CONTENTS

	PAGE
SAFETY CONSIDERATIONS	1
INTRODUCTION	2
PRECAUTIONS	3
INFORMATION SERVICING (FLAMMABLE MATERIALS)	5
MODEL NUMBER NOMENCLATURE	8
WIRING	10
CONNCTION DIAGRAMS	11
WIRING DIAGRAMS	12
REFRIGERANT CYCLE DIAGRAMS	15
REFRIGERANT LINES	17
SYSTEM EVACUATION AND CHARGING	19
ELECTRONIC FUNCTIONS	20
QUICK MAINTENANCE BY ERROR CODE	24
GENERAL TROUBLESHOOTING	26
ERROR CODES	28
OUTDOOR UNIT DISPLAY	29
TROUBLESHOOTING BY ERROR CODE	32
CHECK PROCEDURES	66
DISASSEMBLY INSTRUCTIONS	73
APPENDIX	93

SAFETY CONSIDERATIONS

Installing, starting up, and servicing air-conditioning equipment can be hazardous due to system pressures, electrical components, and equipment location (roofs, elevated structures, etc.). Only trained, qualified installers and service mechanics should install, start-up, and service this equipment.

Untrained personnel can perform basic maintenance functions such as coil cleaning. All other operations should be performed by trained service personnel.

When working on the equipment, observe precautions in the product literature and on tags, stickers, and labels attached to the equipment.

Follow all safety codes. Wear safety glasses and work gloves. Keep a quenching cloth and fire extinguisher nearby when brazing. Use care in handling, rigging, and setting bulky equipment.

Read this manual thoroughly and follow all warnings or cautions included in the literature and attached to the unit. Consult local building codes and National Electrical Code (NEC) for special requirements. Recognize safety information. This is the safety-alert symbol ⚠. When you see this symbol on the unit and in instructions or manuals, be alert to the potential for personal injury.

Understand these signal words: **DANGER**, **WARNING**, and **CAUTION**. These words are used with the safety-alert symbol. **DANGER** identifies the most serious hazards which **will** result in severe personal injury or death. **WARNING** signifies hazards which **could** result in personal injury or death. **CAUTION** is used to identify unsafe practices which **may** result in minor personal injury or product and property damage. **NOTE** is used to highlight suggestions which **will** result in enhanced installation, reliability, or operation.

⚠ WARNING

ELECTRICAL SHOCK HAZARD
Failure to follow this warning could result in personal injury or death.

Before installing, modifying, or servicing system, main electrical disconnect switch must be in the **OFF** position. There may be more than 1 disconnect switch. Lock out and tag switch with a suitable warning label.

⚠ WARNING

EXPLOSION HAZARD
Failure to follow this warning could result in death, serious personal injury, and/or property damage. Never use air or gases containing oxygen for leak testing or operating refrigerant compressors. Pressurized mixtures of air or gases containing oxygen can lead to an explosion.

⚠ CAUTION

EQUIPMENT DAMAGE HAZARD
Failure to follow this caution may result in equipment damage or improper operation.Do not bury more than 36 in. (914 mm) of refrigerant pipe in the ground. If any section of pipe is buried, there must be a 6 in. (152 mm) vertical rise to the valve connections on the outdoor units.

If more than the recommended length is buried, refrigerant may migrate to the cooler buried section during extended periods of system shutdown. This causes refrigerant slugging and could possibly damage the compressor at start-up.

INTRODUCTION

This service manual provides the necessary information to service, repair, and maintain the 37MBRAQ/37MBHAQ family of heat pumps. This manual has an “APPENDIX” on page 93 with data required to perform troubleshooting. Use the “TABLE OF CONTENTS” on page 1 to locate a desired topic.

⚠ WARNING

Only use the specified wire. If the wire is damaged, it must be replaced by the manufacturer, its service agent or similarly qualified persons in order to avoid a hazard. The product must be properly grounded at the time of installation, or electric shock may occur.

For all electrical work, follow all local and national wiring standards, regulations, and the Installation Manual. Connect the cables tightly, and clamp them securely to prevent external forces from damaging the terminal. Improper electrical connections can overheat and cause fire, and may also cause shock. All electrical connections must be made according to the Electrical Connection Diagram located on the panels of the indoor and outdoor units.

All wiring must be properly arranged to ensure that the control board cover can close properly. If the control board cover is not closed properly, it can lead to corrosion and cause the connection points on the terminal to heat up, catch fire, or cause electrical shock.

Disconnection must be incorporated in the fixed wiring in accordance with NEC, CSA, and Local Codes. Do not share the electrical outlet with other appliances. Improper or insufficient power supply can cause fire or electric shock.

If connecting power to fixed wiring, an all-pole disconnection device which has at least 3mm clearances in all poles, and have a leakage current that may exceed 10mA, the residual current device (RCD) having a rated residual operating current not exceeding 30mA, and disconnection must be incorporated in the fixed wiring in accordance with NEC, CSA, and Local Codes.

⚠ WARNING

Turn of the unit and disconnect the power before performing any installation or repairing. Failure to do so can cause electric shock.

Installation must be performed by an authorized dealer or specialist. Defective installation can cause water leakage, electrical shock, or fire. Installation must be performed according to the installation instructions.

Improper installation can cause water leakage, electrical shock, or fire. Contact an authorized service technician for repair or maintenance of this unit. This appliance shall be installed in accordance with national wiring regulations.

Only use the included accessories, parts, and specified parts for installation. Using non-standard parts can cause water leakage, electrical shock, fire, and can cause the unit to fail.

Install the unit in a firm location that can support the unit’s weight. If the chosen location cannot support the unit’s weight, or the installation is not done properly, the unit may drop and cause serious injury and damage. Install drainage piping according to the instructions in this manual. Improper drainage may cause water damage to your home and property.

For units that have an auxiliary electric heater, do not install the unit within 3 feet (1 meter) of any combustible materials.

If combustible gas accumulates around the unit, it may cause fire.

Do not turn on the power until all work has been completed.

When moving or relocating the unit, consult experienced service technicians for disconnection and re-installation of the unit.

How to install the appliance to its support, please read the information for details in "Indoor Unit Installation" and "Outdoor Unit Installation" sections.

NOTE: The air conditioner’s circuit board (PCB) is designed with a fuse to provide overcurrent protection. The specifications of the fuse are printed on the circuit board, for example: T3.15AL/250VAC, T5AL/250VAC, T3.15A/250VAC, T5A/ 250VAC, T20A/250VAC, T30A/250VAC,etc.

NOTE: Only the blast-proof ceramic fuse can be used.

⚠ WARNING

FOR FLAMMABLE REFRIGERANTS

Do not use means to accelerate the defrosting process or to clean, other than those recommended by the manufacturer.

The appliance shall be stored in a room without continuously operating ignition sources (for example: open flames, an operating gas appliance or an operating electric heater).

Do not pierce or burn. Be aware that refrigerants may not contain an odor.

⚠ WARNING

PERSONAL INJURY AND PROPERTY DAMAGE HAZARD

For continued performance, reliability, and safety, the only approved accessories and replacement parts are those specified by the equipment manufacturer. The use of non-manufacturer approved parts and accessories could invalidate the equipment limited warranty and result in fire risk, equipment malfunction, and failure. Review the manufacturer's instructions and replacement parts catalogs available from your equipment supplier.

WARNING - RISK OF FIRE DUE TO FLAMMABLE REFRIGERANT USED. FOLLOW HANDLING INSTRUCTIONS CAREFULLY IN COMPLIANCE WITH NATIONAL REGULATIONS.

R-454B

R-454B

NOTE: Risk of Fire. Flammable refrigerant used. To be repaired only by trained service personnel. Do not puncture refrigerant tubing.

PRECAUTIONS

To prevent personal injury, or property or unit damage, adhere to all precautionary measures and instructions outlined in this manual. Before servicing a unit, refer to this service manual and its relevant sections.

Failure to adhere to all precautionary measures listed in this section may result in personal injury, damage to the unit or to property, or in extreme cases, death.

IN CASE OF ACCIDENT OR EMERGENCY

⚠ WARNING

- If a gas leak is suspected, immediately turn off the gas and ventilate the area if a gas leak is suspected before turning the unit on.
- If strange sounds or smoke is detected from the unit, turn the breaker off and disconnect the power supply cable.
- If the unit comes into contact with liquid, contact an authorized service center.
- If liquid from the batteries makes contact with skin or clothing, immediately rinse or wash the area well with clean water.
- Do not insert hands or other objects into the air inlet or outlet while the unit is plugged in.
- Do not operate the unit with wet hands.

⚠ CAUTION

- Clean and ventilate the unit at regular intervals when operating it near a stove or near similar devices.
- Do not use the unit during severe weather conditions. If possible, remove the product from the window before such occurrences.

PRE-INSTALLATION AND INSTALLATION

⚠ WARNING

- Use this unit only on a dedicated circuit.
- Damage to the installation area could cause the unit to fall, potentially resulting in personal injury, property damage, or product failure.
- Only qualified personnel should disassemble, install, remove, or repair the unit.
- Only a qualified electrician should perform electrical work. For more information, contact your dealer, seller, or an authorized service center.

⚠ CAUTION

While unpacking be careful of sharp edges around the unit as well as the edges of the fins on the con-denser and evaporator.

OPERATION AND MAINTENANCE

⚠ WARNING

- Do not use defective or under-rated circuit breakers.
- Ensure the unit is properly grounded and that a dedicated circuit and breaker are installed.
- Do not modify or extend the power cable. Ensure the power cable is secure and not damaged during operation.
- Do not unplug the power supply plug during operation.
- Do not store or use flammable materials near the unit.
- Do not open the inlet grill of the unit during operation.
- Do not touch the electrostatic filter if the unit is equipped with one.
- Do not block the inlet or outlet of air flow to the unit.
- Do not use harsh detergents, solvents, or similar items to clean the unit. Use a soft cloth for cleaning.
- Do not touch the metal parts of the unit when removing the air filter as they are very sharp.
- Do not step on or place anything on the unit or outdoor units.
- Do not drink water drained from the unit
- Avoid direct skin contact with water drained from the unit.
- Use a firm stool or step ladder according to manufacturer procedures when cleaning or maintaining the unit.

⚠ CAUTION

- Do not install or operate the unit for an extended period of time in areas of high humidity or in an environment directly exposing it to sea wind or salt spray.
- Do not install the unit on a defective or damaged installation stand, or in an unsecure location.
- Ensure the unit is installed at a level position
- Do not install the unit where noise or air discharge created by the outdoor unit will negatively impact the environment or nearby residences.
- Do not expose skin directly to the air discharged by the unit for prolonged periods of time.
- Ensure the unit operates in areas water or other liquids.
- Ensure the drain hose is installed correctly to ensure proper water drainage.
- When lifting or transporting the unit, it is recommended that two or more people are used for this task.
- When the unit is not to be used for an extended time, disconnect the power supply or turn off the breaker.

WARNING FOR USING FLAMMABLE REFRIGERANT

1. Installation (Space)
   – That the installation of pipe-work shall be kept to a minimum.
   – That pipe-work shall be protected from physical damage.
   – Where refrigerant pipes shall be compliance with national gas regulations.
   – That mechanical connections shall be accessible for maintenance purposes.
   – In cases that require mechanical ventilation, ventilation openings shall be kept clear of obstruction.
   – When disposing of the product is used, be based on national regulations, properly processed.
2. Servicing

   Any person who is involved with working on or breaking into a refrigerant circuit should hold a current valid certificate from an industry-accredited assessment authority, which authorizes their competence to handle refrigerants safely in accordance with an industry recognized assessment specification.
3. Maintenance and repair requiring the assistance of other skilled personnel shall be carried out under the supervision of the person competent in the use of flammable refrigerants.
4. Do not use means to accelerate the defrosting process or to clean, other than those recommended by the manufacturer.
5. The appliance shall be stored in a room without continuously operating ignition sources (for example: open flames, an operating gas appliance or an operating electric heater).
6. Be more careful that foreign matter (oil, water, etc.) does not enter the piping. Also, when storing the piping, securely seal the opening by pinching, taping, etc.
7. Do not pierce or burn.
8. Be aware that refrigerants may not contain an odor.
9. All working procedure that affects safety means shall only be carried by competent persons.
10. Appliance shall be stored in a well -ventilated area where the room size corresponds to the room area as specific for operation.
11. The appliance shall be stored so as to prevent mechanical damage from occurring.
12. Joints shall be tested with detection equipment with a capability of 5 g/year of refrigerant or better, with the equipment in standstill and under operation or under a pressure of at least these standstill or operation conditions after installation. Detachable joints shall NOT be used in the indoor side of the unit (brazed, welded joint could be used).
13. When a FLAMMABLE REFRIGERANT is used, the requirements for installation space of appliance and /or ventilation requirements are determined according to
    – the mass charge amount (M) used in the appliance,
    – the installation location,
    – the type of ventilation of the location or of the appliance.
    – piping material, pipe routing, and installation shall include protection from physical damage in operation and service, and be in compliance with national and local codes and standards, such as ASHRAE 15, IAPMO Uniform Mechanical Code, ICC International Mechanical Code, or CSA B52. All field joints shall be accessible for inspection prior to being covered or enclosed.
    – that protection devices, piping, and fittings shall be protected as far as possible against adverse environmental effects, for ex-ample, the danger of water collecting and freezing in relief pipes or the accumulation of dirt and debris;

– that piping in refrigeration systems shall be so designed and installed to minimize the likelihood of hydraulic shock damaging the system;
– that steel pipes and components shall be protected against corrosion with a rustproof coating before applying any insulation;
– that precautions shall be taken to avoid excessive vibration or pulsation;
– the minimum floor area of the room shall be mentioned in the form of a table or a single figure without reference to a formula;
– after completion of field piping for split systems, the field pipe-work shall be pressure tested with an inert gas and then vacuum tested prior to refrigerant charging, according to the following requirements:
  – The minimum test pressure for the low side of the system shall be the low side design pressure and the minimum test pressure for the high side of the system shall be the high side design pressure, unless the high side of the system, cannot be isolated from the low side of the system in which case the entire system shall be pressure tested to the low side design pressure.
  – The test pressure after removal of pressure source shall be maintained for at least 1h with no decrease of pressure indicated by the test gauge, with test gauge resolution not exceeding 5% of the test pressure.
  – During the evacuation test, after achieving a vacuum level specified in the manual or less, the refrigeration system shall be isolated from the vacuum pump and the pressure shall not rise above 1500 microns within 10 min. The vacuum pressure level shall be specified in the manual, and shall be the lessor of 500 microns or the value required for compliance with national and local codes and standards, which may vary between residential, commercial, and industrial buildings.
– field-made refrigerant joints indoors shall be tightness tested according to the following requirements: The test method shall have a sensitivity of 5 grams per year of refrigerant or better under a pressure of at least 0,25 times the maximum allowable pressure. No leak shall be detected.
– correct the minimum room area of the space Amin by multiplying by the altitude adjustment factor (AF) factor in the below table based on for building site ground level altitude (Halt) in meters.

Table 1 — Altitude Adjustment Factor

Halt	0	200	400	600	800	1000	1200	1400	1600
AF	1.00	1.00	1.00	1.00	1.02	1.05	1.07	1.10	1.12
Halt	1800	2000	2200	2400	2600	2800	3000	3200	
AF	1.15	1.18	1.21	1.25	1.28	1.32	1.36	1.40	

– Warning: keep any required ventilation openings clear of obstruction;
– Any servicing shall be performed only as recommended by the manufacturer

14. Qualification of workers

Any maintenance, service and repair operations must be required qualification of the working personnel. Every working procedure that affects safety means shall only be carried out by competent persons that joined the training and achieved competence should be documented by a certificate. The training of these procedures is carried out by national training organizations or manufacturers that are accredited to teach the relevant national competency standards that may be set in legislation. All training shall follow the ANNEX HH requirements of UL 60335-2-40 4rd Edition.

Examples for such working procedures are:

- breaking into the refrigerating circuit
- opening of sealed components
- opening of ventilated enclosures

INFORMATION SERVICING (FLAMMABLE MATERIALS)

CHECKS TO THE AREA

Prior to beginning work on systems containing flammable refrigerants, safety checks are necessary to ensure that the risk of ignition is minimized. For repair to the refrigerating system, the following precautions shall be complied with prior to conducting work on the system.

WORK PROCEDURE

Work shall be undertaken under a controlled procedure so as to minimize the risk of a flammable gas or vapor being present while the work is being performed.

GENERAL WORK AREA

All maintenance staff and others working in the local area shall be instructed on the nature of work being carried out. Work in confined spaces shall be avoided.

CHECKING FOR PRESENCE OF REFRIGERANT

– The area shall be checked with an appropriate refrigerant detector prior to and during work, to ensure the technician is aware of potentially flammable atmospheres.
– Ensure that the leak detection equipment being used is suitable for use with flammable refrigerants, i.e. no sparking, adequately sealed or intrinsically safe.

PRESENCE OF FIRE EXTINGUISHER

If any hot work is to be conducted on the refrigeration equipment or any associated parts, appropriate fire extinguishing equipment shall be available to hand. Have a dry powder or CO2 fire extinguisher adjacent to the charging area.

NO IGNITION SOURCE

– No person carrying out work in relation to a refrigeration system which involves exposing any pipe work that contains or has contained flammable refrigerant shall use any sources of ignition in such a manner that it may lead to the risk of fire or explosion.
– All possible ignition sources, including cigarette smoking, should be kept sufficiently far away from the site of installation, repairing, removing and disposal, during which flammable refrigerant can possibly be released to the surrounding space.
– Prior to work taking place, the area around the equipment is to be surveyed to make sure that there are no flammable hazards or ignition risks.
– NO SMOKING signs shall be displayed.

VENTILATED AREA

Ensure that the area is in the open or that it is adequately ventilated before breaking into the system or conducting any hot work. A degree of ventilation shall continue during the period that the work is carried out. The ventilation should safely disperse any released refrigerant and preferably expel it externally into the atmosphere.

CHECKS TO THE REFRIGERANT EQUIPMENT

Where electrical components are being changed, they shall be fit for the purpose and to the correct specification. At all times the manufacturer's maintenance and service guidelines shall be followed. If in doubt consult the manufacturer's technical department for assistance. The following checks shall be applied to installations using FLAMMABLE REFRIGERANTS:

– the actual refrigerant charge is in accordance with the room size within which the refrigerant containing parts are installed;
– the ventilation machinery and outlets are operating adequately and are not obstructed;
– if an indirect refrigerating circuit is being used, the secondary circuits shall be checked for the presence of refrigerant;

– marking to the equipment continues to be visible and legible, marking and signs that are illegible shall be corrected;
– refrigeration pipe or components are installed in a position where they are unlikely to be exposed to any substance which may corrode refrigerant containing components, unless the components are constructed of materials which are inherently resistant to being corroded or are suitably protected against being so corroded.

CHECK TO ELECTRICAL DEVICES

Repair and maintenance to electrical components shall include initial safety checks and component inspection procedures. If a fault exists that could compromise safety, then no electrical supply shall be connected to the circuit until it is satisfactorily dealt with. If the fault cannot be corrected immediately but it is necessary to continue operation, an adequate temporary solution shall be used. This shall be reported to the owner of the equipment so all parties are advised. Initial safety checks shall include:

– that capacitors are discharged: this shall be done in a safe manner to avoid possibility of sparking;
– that there no live electrical components and wiring are exposed while charging, recovering or purging the system;
– that there is continuity of earth bonding.

SEALED ELECTRICAL COMPONENTS SHALL BE REPLACED

- During repairs to sealed components, all electrical supplies shall be disconnected from the equipment being worked upon prior to any removal of sealed covers, etc.

  If it is absolutely necessary to have an electrical supply to equipment during servicing, then a permanently operating form of leak detection shall be located at the most critical point to warn of a potentially hazardous situation.
- Particular attention shall be paid to the following to ensure that by working on electrical components, the casing is not altered in such a way that the level of protection is affected. This shall include damage to cables, excessive number of connections, terminals not made to original specification, damage to seals, incorrect fitting of glands, etc.
  – Ensure that apparatus is mounted securely.
  – Ensure that seals or sealing materials have not degraded such that they no longer serve the purpose of preventing the ingress of flammable atmospheres. Replacement parts shall be in accordance with the manufacturer's specifications.

INTRISICALLY SAFE COMPONENTS MUST BE REPLACED

Do not apply any permanent inductive or capacitance loads to the circuit without ensuring that this will not exceed the permissible voltage and current permitted for the equipment in use. Intrinsically safe components are the only types that can be worked on while live in the presence of a flammable atmosphere. The test apparatus shall be at the correct rating. Replace components only with parts specified by the manufacturer. Other parts may result in the ignition of refrigerant in the atmosphere from a leak.

NOTE: The use of silicon sealant may inhibit the effectiveness of some types of leak detection equipment. Intrinsically safe components do not have to be isolated prior to working on them.

CABLING

Check that cabling will not be subject to wear, corrosion, excessive pressure, vibration, sharp edges or any other adverse environmental effects. The check shall also take into account the effects of aging or continual vibration from sources such as compressors or fans.

DETECTION OF FLAMMABLE REFRIGERANTS

– Under no circumstances shall potential sources of ignition be used in the searching for or detection of refrigerant leaks. A halide torch (or any other detector using a naked flame) shall not be used.
– The following leak detection methods are deemed acceptable for refrigerant systems. Electronic leak detectors may be used to detect refrigerant leaks but, in the case of FLAMMABLE REFRIGERANTS, the sensitivity may not be adequate, or may need re-calibration. (Detection equipment shall be calibrated in a refrigerant-free area.) Ensure that the detector is not a potential source of ignition and is suitable for the refrigerant used. Leak detection equipment shall be set at a percentage of the LFL of the refrigerant and shall be calibrated to the refrigerant employed, and the appropriate percentage of gas (25 % maximum) is confirmed. Leak detection fluids are also suitable for use with most refrigerants but the use of detergents containing chlorine shall be avoided as the chlorine may react with the refrigerant and corrode the copper pipe-work.

NOTE Examples of leak detection fluids are:

- **bubble method,**
- **fluorescent method agents.**
  – If a leak is suspected, all naked flames shall be removed/extinguished.
  – If a leakage of refrigerant is found which requires brazing, all of the refrigerant shall be recovered from the system, or isolated (by means of shut of valves) in a part of the system remote from the leak. See the following instructions of removal of refrigerant.

REMOVAL AND EVACUATION

- When breaking into the refrigerant circuit to make repairs or for any other purpose, conventional procedures shall be used. However, it is important that best practice is followed since flammability is a consideration.
- The following procedure shall be adhered to:
  – safely remove refrigerant following local and national regulations;
  – evacuate;
  – purge the circuit with inert gas (optional for A2L);
  – evacuate (optional for A2L);
  – continuously flush or purge with inert gas when using flame to open circuit; and open the circuit;
- The refrigerant charge shall be recovered into the correct recovery cylinders if venting is not allowed by local and national codes. For appliances containing flammable refrigerants, the system shall be purged with oxygen-free nitrogen to render the appliance safe for flammable refrigerants. This process might need to be repeated several times. Compressed air or oxygen shall not be used for purging refrigerant systems.
- For appliances containing flammable refrigerants, refrigerants purging shall be achieved by breaking the vacuum in the system with oxygen-free nitrogen and continuing to fill until the working pressure is achieved, then venting to atmosphere, and finally pulling down to a vacuum (optional for A2L). This process shall be repeated until no refrigerant is within the system (optional for A2L). When the final oxygen-free nitrogen charge is used, the system shall be vented down to atmospheric pressure to enable work to take place.
- The outlet for the vacuum pump shall not be close to any potential ignition sources, and ventilation shall be available.

CHARGING PROCEDURES

In addition to conventional charging procedures, the following requirements shall be followed:

- Works shall be undertaken with appropriate tools only (In case of uncertainty, please consult the manufacturer of the tools for use with flammable refrigerants)
- Ensure that contamination of different refrigerants does not occur when using charging equipment. Hoses or lines shall be as short as possible to minimize the amount of refrigerant contained in them.
- Cylinders shall be kept upright.
- Ensure that the refrigeration system is earthed prior to charging the system with refrigerant.
- Label the system when charging is complete (if not already). Extreme care shall be taken not to overfill the refrigeration system.
- Prior to recharging the system it shall be pressure tested with OFN. The system shall be leak tested on completion of charging but prior to commissioning. A follow up leak test shall be carried out prior to leaving the site.

DECOMMISSIONING

Before carrying out this procedure, it is essential that the technician is completely familiar with the equipment and all its detail. It is recommended good practice that all refrigerants are recovered safely. Prior to the task being carried out, an oil and refrigerant sample shall be taken in case analysis is required prior to re-use of recovered refrigerant. It is essential that electrical power is available before the task is commenced.

- Become familiar with the equipment and its operation.
- Isolate system electrically.
- Before attempting the procedure ensure that:
  - mechanical handling equipment is available, if required, for handling refrigerant cylinders;
  - all personal protective equipment is available and being used correctly;
  - the recovery process is supervised at all times by a competent person;
  - recovery equipment and cylinders conform to the appropriate standards.
- Pump down refrigerant system, if possible.
- If a vacuum is not possible, make a manifold so that refrigerant can be removed from various parts of the system.
- Make sure that cylinder is situated on the scales before recovery takes place.
- Start the recovery machine and operate in accordance with manufacturer's instructions.
- Do not overfill cylinders. (No more than 80% volume liquid charge).
- Do not exceed the maximum working pressure of the cylinder, even temporarily.
- When the cylinders have been filled correctly and the process completed, make sure that the cylinders and the equipment are removed from site promptly and all isolation valves on the equipment are closed off.
- Recovered refrigerant shall not be charged into another refrigeration system unless it has been cleaned and checked.

LABELING

Equipment shall be labeled stating that it has been de-commissioned and emptied of refrigerant. The label shall be dated and signed. For appliances containing FLAMMABLE REFRIGERANTS, ensure that there are labels on the equipment stating the equipment contains FLAMMABLE REFRIGERANT.

RECOVERY

- When removing refrigerant from a system, either for servicing or decommissioning,
- it is recommended good practice that all refrigerants are removed safely.
- When transferring refrigerant into cylinders, ensure that only appropriate refrigerant recovery cylinders are employed. Ensure that the correct number of cylinders for holding the total system charge is available. All cylinders to be used are designated for the recovered refrigerant and labeled for that refrigerant (i.e. special cylinders for the recovery of refrigerant). Cylinders shall be complete with pressure-relief valve and associated shut-of valves in good working order. Empty recovery cylinders are evacuated and, if possible, cooled before recovery occurs.
- The recovery equipment shall be in good working order with a set of instructions concerning the equipment that is at hand and shall be suitable for the recovery of the flammable refrigerant. If in doubt the manufacturer should be consulted. In addition, a set of calibrated weighing scales shall be available and in good working order. Hoses shall be complete with leak-free disconnect couplings and in good condition.
- The recovered refrigerant shall be processed according to local legislation in the correct recovery cylinder, and the relevant waste transfer note arranged. Do not mix refrigerants in recovery units and especially not in cylinders.
- If compressors or compressor oils are to be removed, ensure that they have been evacuated to an acceptable level to make certain that flammable refrigerant does not remain within the lubricant. The compressor body shall not be heated by an open flame or other ignition sources to accelerate this process. When oil is drained from a system, it shall be carried out safely.

TRANSPORTATION, MARKING AND STORAGE FOR UNITS

1. Transport of equipment containing flammable refrigerants
   Compliance with the transport regulations
2. Marking of equipment using signs
   Compliance with local regulations
3. Disposal of equipment using flammable refrigerants
   Compliance with national regulations
4. Storage of equipment/appliances
   The storage of equipment should be in accordance with the manufacturer's instructions.
5. Storage of packed (unsold) equipment
   Storage package protection should be constructed such that mechanical damage to the equipment inside the package will not cause a leak of the refrigerant charge. The maximum number of pieces of equipment permitted to be stored together will be determined by local regulations.

Manufacturer reserves the right to change, at any time, specifications and designs without notice and without obligations.

MODEL NUMBER NOMENCLATURE

37MBRAQ Models

37MBRAQ			
MODEL	VOLTAGE	OUTDOOR UNIT	RELEASABLE CHARGE (SHUTOFF VALVE)
36K	208/230-1-60	37MBRAQ36AA3	Yes
48K	208/230-1-60	37MBRAQ48AA3	Yes
58K	208/230-1-60	37MBRAQ58AA3	Yes

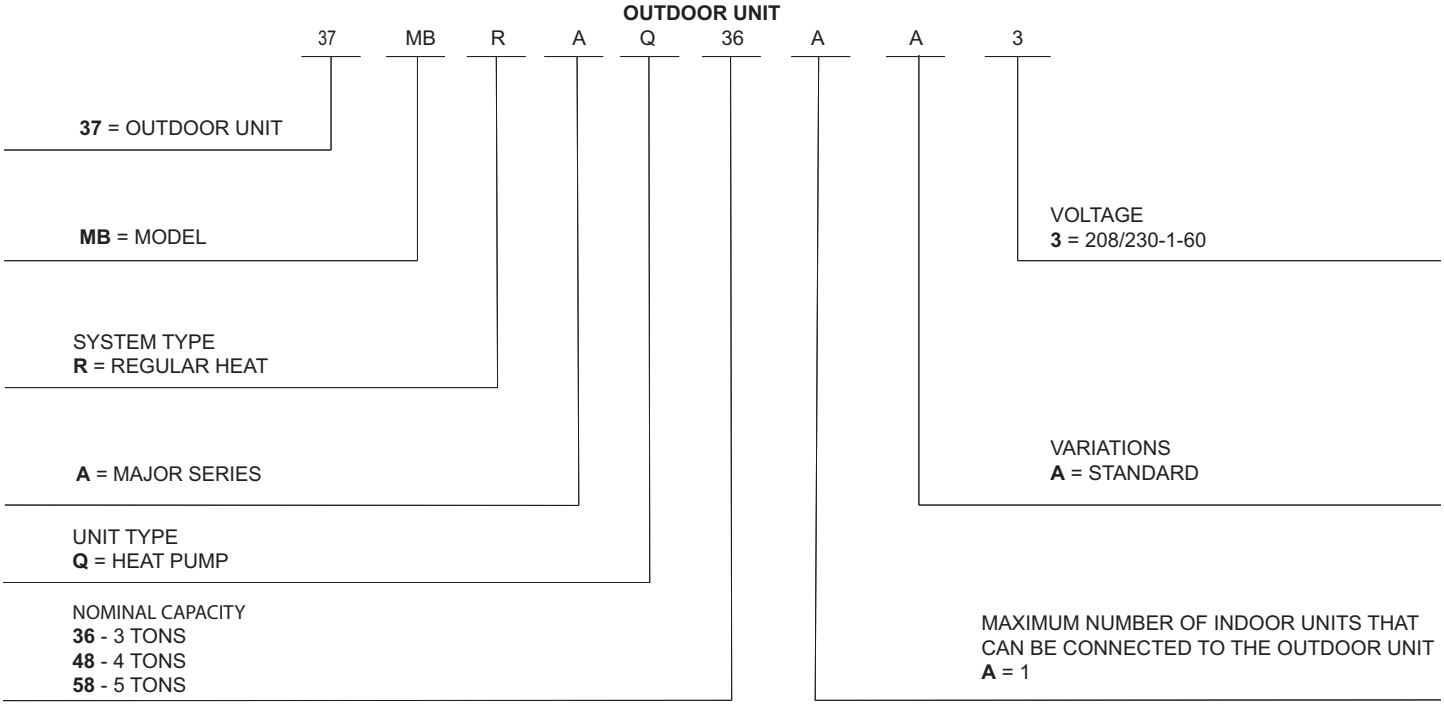

Fig. 1 —Nomenclature

For the Carrier/Bryant brands, the SERIAL NUMBER will be date coded by a two digit week, a two digit year followed by "V" followed with a 5 digit sequential number. The sequential number for MIDEA is between 10001 and 15000.

b. The SERIAL NUMBER will be as follows:

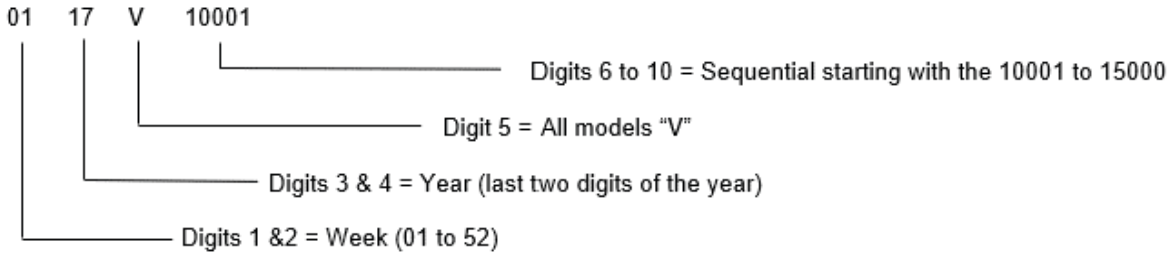

Fig. 2 —Serial Number Nomenclature

Use of the AHRI Certified TM Mark indicates a manufacturer's participation in the program For verification of certification for individual products, go to www.ahridirectory.org.

37MBHAQ Models

37MBHAQ			
MODEL	VOLTAGE	OUTDOOR UNIT	RELEASABLE CHARGE (SHUTOFF VALVE)
36K	208/230-1-60	37MBHAQ36AA3	Yes
48K	208/230-1-60	37MBHAQ48AA3	Yes
58K	208/230-1-60	37MBHAQ58AA3	Yes

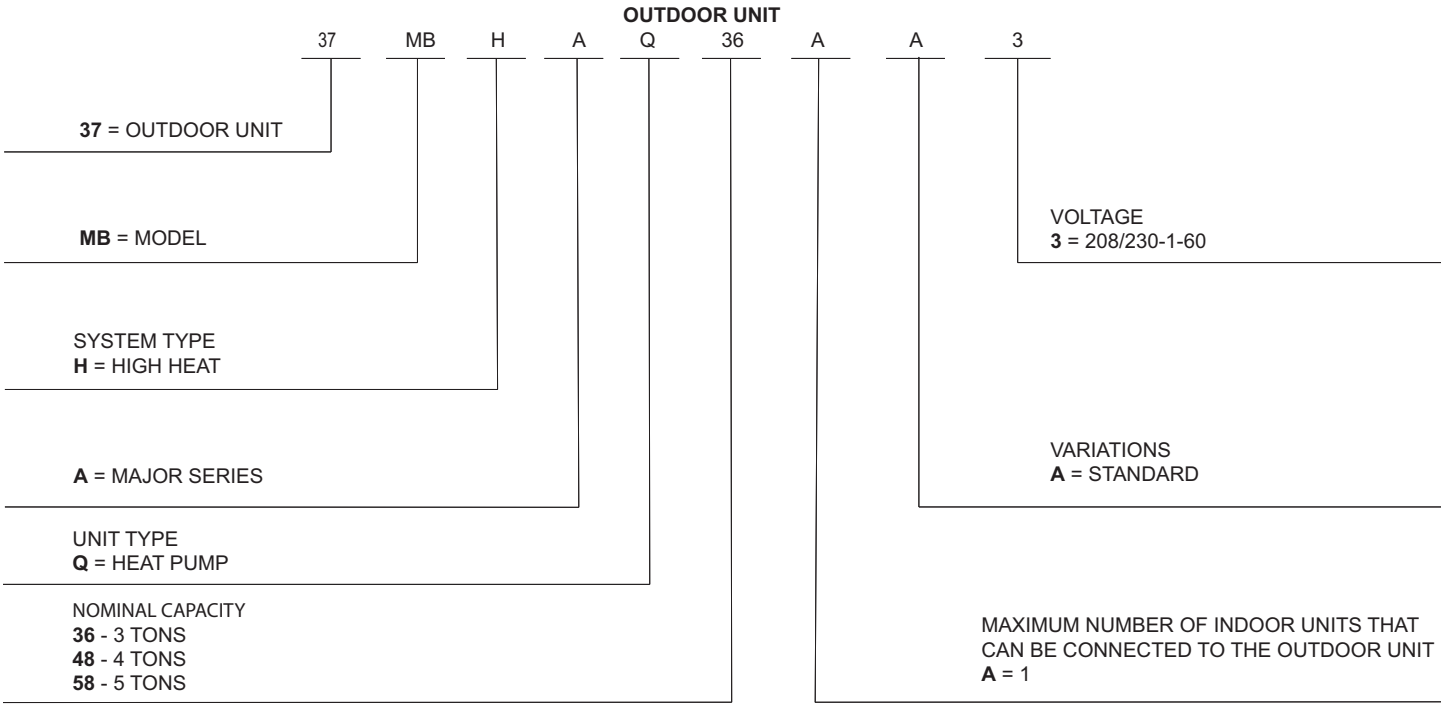

Fig. 3 —Nomenclature

For the Carrier/Bryant brands, the SERIAL NUMBER will be date coded by a two digit week, a two digit year followed by "V" followed with a 5 digit sequential number. The sequential number for MIDEA is between 10001 and 15000.

b. The SERIAL NUMBER will be as follows:

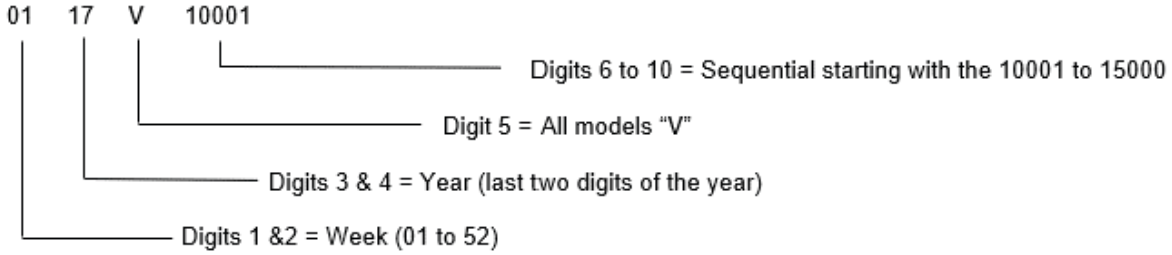

Fig. 4 —Serial Number Nomenclature

WIRING

All wires must be sized per NEC (National Electrical Code) or CEC (Canadian Electrical Code) and local codes.

Sizes 36-58 Recommended Connection Method for Power and Communication Wiring

Power and Communication Wiring:

The main power is supplied to the outdoor unit. The field supplied power wiring from the outdoor unit to the indoor unit consists of three (3) wires and provides the power for the indoor unit. Two wires are high voltage AC power and one is a ground wire. To minimize voltage drop, the factory recommended wire size is 14/2 stranded with a ground.

Communication Wiring: A separate shielded stranded copper conductor only, with a 600 volt rating and double insulated copper wire, must be used as the communication wire from the outdoor unit to the indoor unit.

Please use a separate shielded 16GA stranded control wire.

CABLE	CABLE SIZE	REMARKS
Communication Cable	16AWG	2 wire stranded shielded control wire

⚠ CAUTION

EQUIPMENT DAMAGE HAZARD

Failure to follow this caution may result in equipment damage or improper operation.

Be sure to comply with local codes while running wire from the indoor unit to the outdoor unit.

Wires should be sized based on NEC and local codes.

Every wire must be connected firmly. Loose wiring may cause the terminal to overheat or result in unit malfunction. A fire hazard may also exist. Ensure all wiring is tightly connected.

No wire should touch the refrigerant tubing, compressor or any moving parts.

Disconnecting means must be provided and shall be located within sight and readily accessible from the air conditioner.

CONNCTION DIAGRAMS

Ground Wire Locations

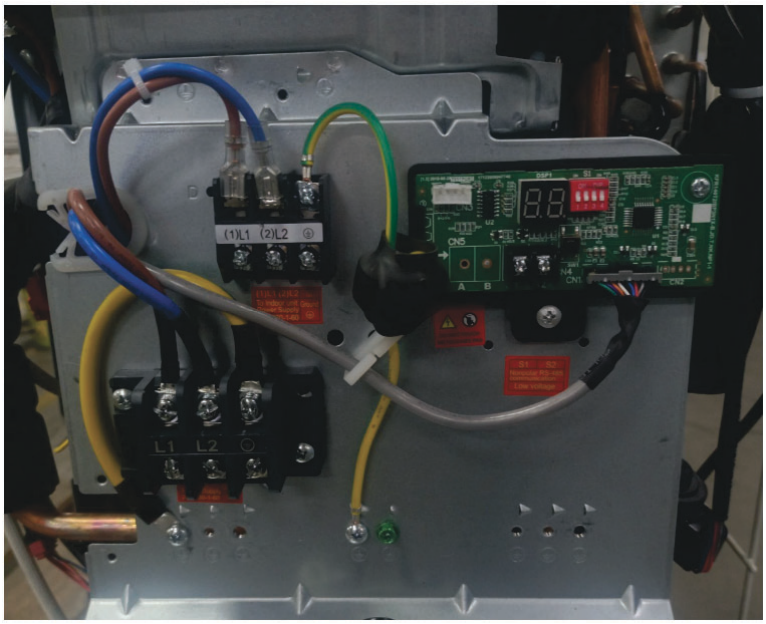

Fig. 5 —Grounding Wire Image - Size 36K

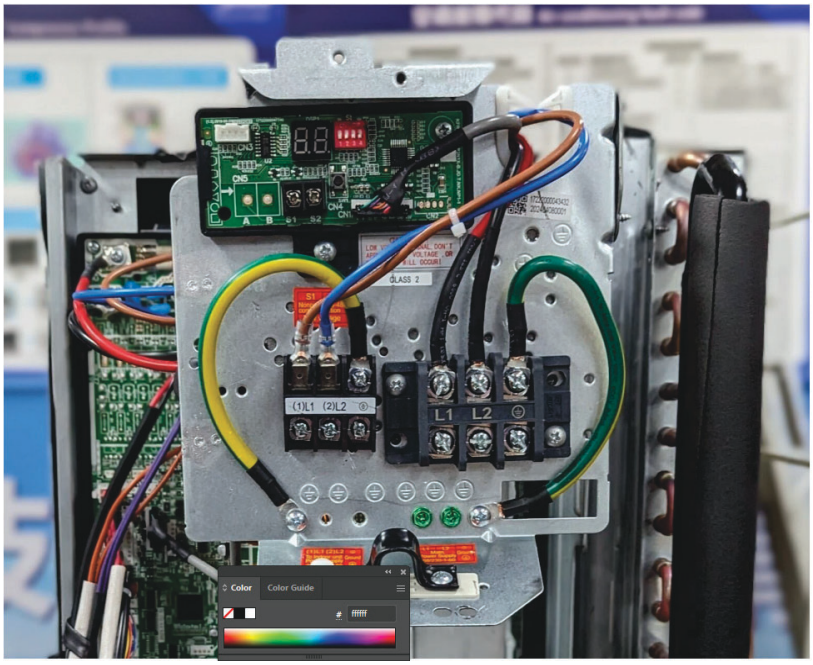

Fig. 6 —Grounding Wire Image - Size 48K-58K

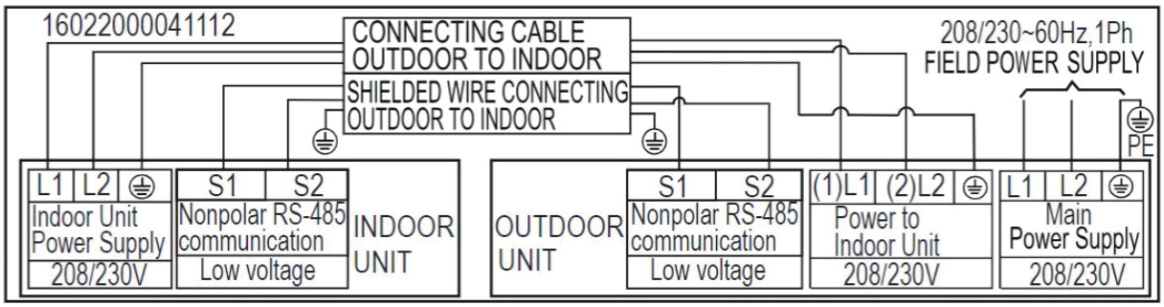

Fig. 7 —Control and Power Terminals Sizes 36K-58K

WIRING DIAGRAMS

37MBRAQ Units 36K

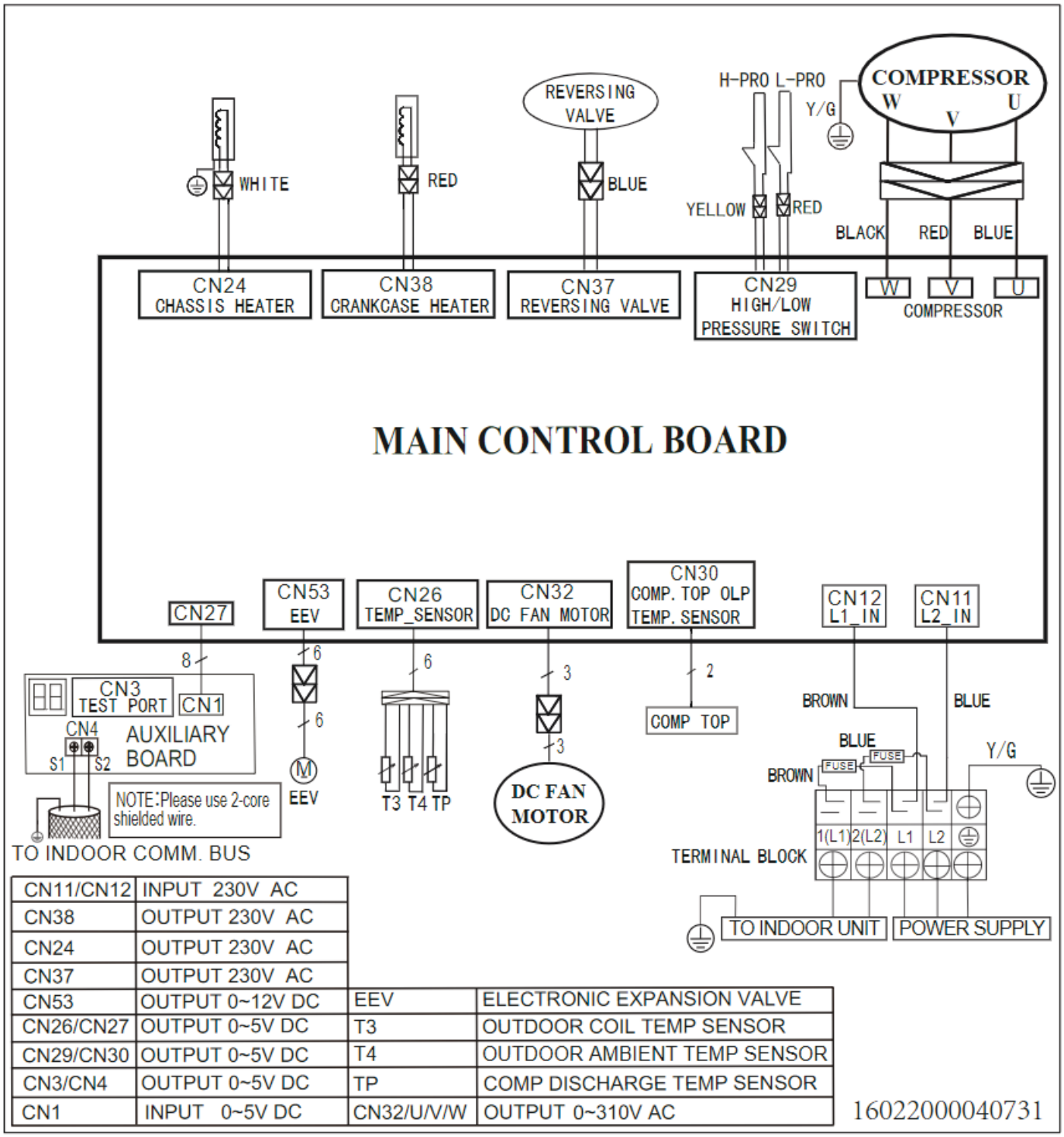

CN11/CN12	INPUT 230V AC		
CN38	OUTPUT 230V AC		
CN24	OUTPUT 230V AC		
CN37	OUTPUT 230V AC		
CN53	OUTPUT 0~12V DC	EEV	ELECTRONIC EXPANSION VALVE
CN26/CN27	OUTPUT 0~5V DC	T3	OUTDOOR COIL TEMP SENSOR
CN29/CN30	OUTPUT 0~5V DC	T4	OUTDOOR AMBIENT TEMP SENSOR
CN3/CN4	OUTPUT 0~5V DC	TP	COMP DISCHARGE TEMP SENSOR
CN1	INPUT 0~5V DC	CN32/U/V/W	OUTPUT 0~310V AC

Fig. 8 —Wiring Diagram - Size 36K

NOTE: Refer to the actual diagram on the unit.

37MBHAQ Units 36K

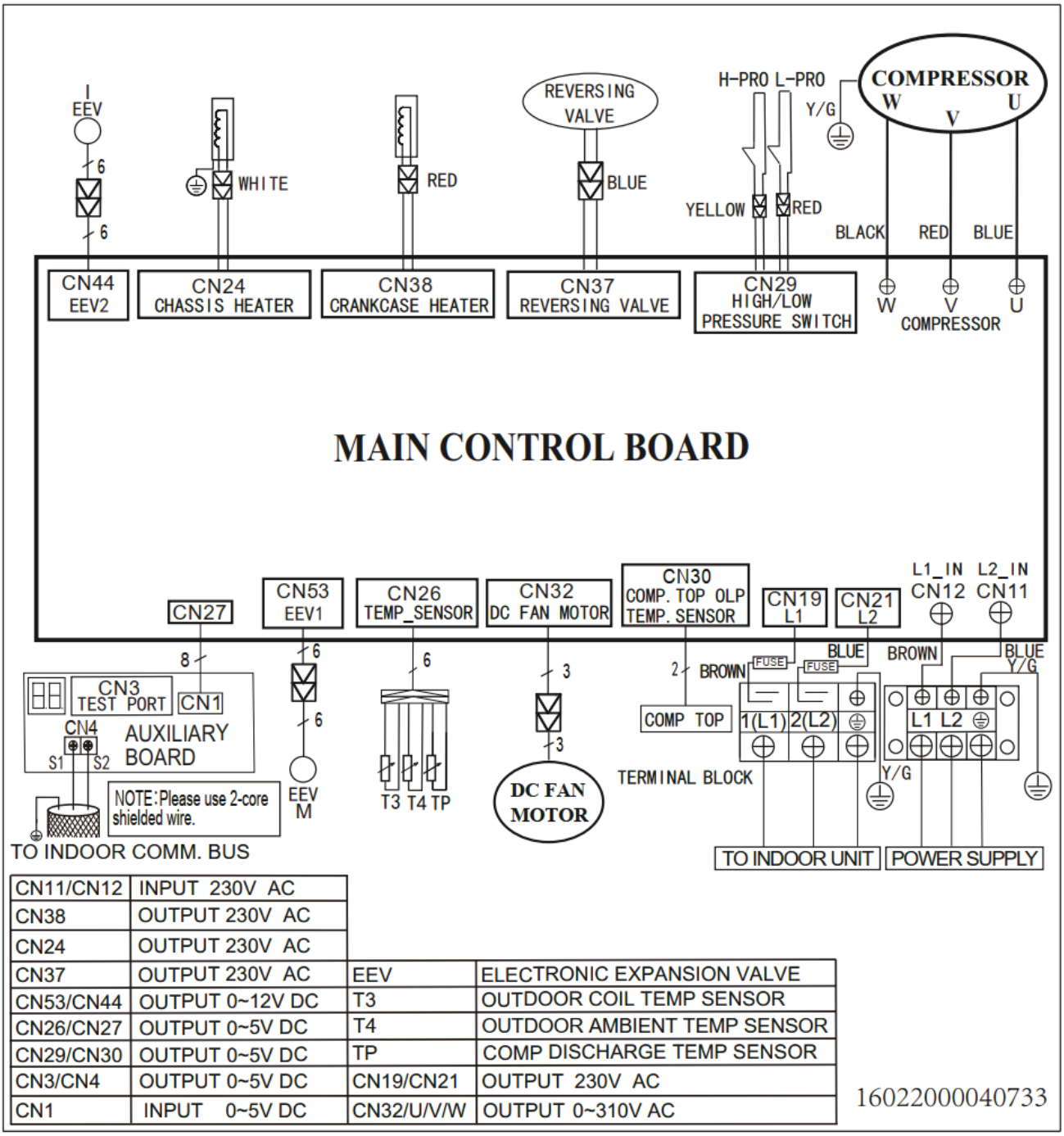

CN11/CN12	INPUT 230V AC		
CN38	OUTPUT 230V AC		
CN24	OUTPUT 230V AC		
CN37	OUTPUT 230V AC	EEV	ELECTRONIC EXPANSION VALVE
CN53/CN44	OUTPUT 0~12V DC	T3	OUTDOOR COIL TEMP SENSOR
CN26/CN27	OUTPUT 0~5V DC	T4	OUTDOOR AMBIENT TEMP SENSOR
CN29/CN30	OUTPUT 0~5V DC	TP	COMP DISCHARGE TEMP SENSOR
CN3/CN4	OUTPUT 0~5V DC	CN19/CN21	OUTPUT 230V AC
CN1	INPUT 0~5V DC	CN32/U/V/W	OUTPUT 0~310V AC

Fig. 9 —Wiring Diagram - 37MBHAQ Units ,Size 36K

37MBRAQ/37MBHAQ 48K-58K Units

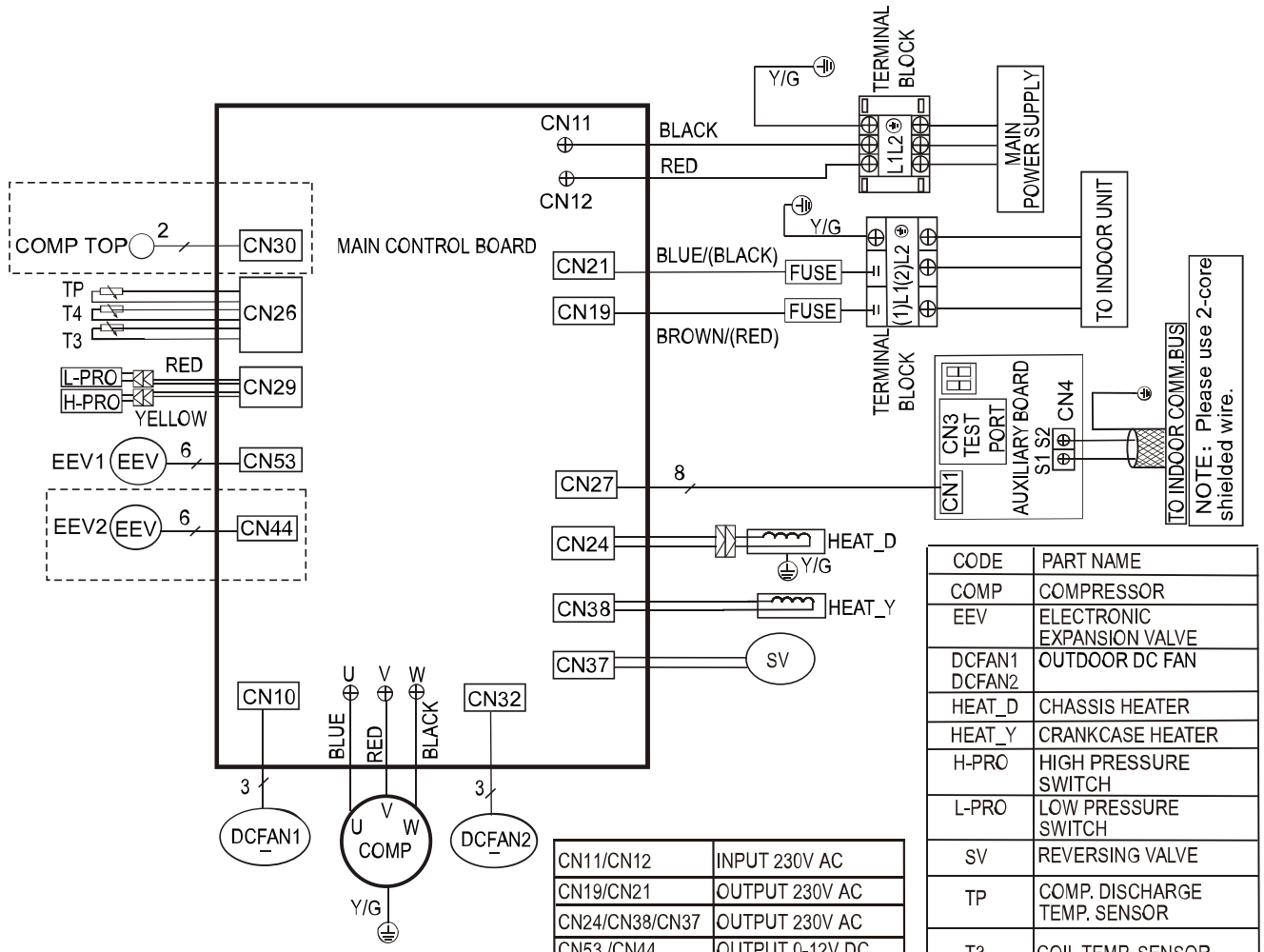

CODE	PART NAME
COMP	COMPRESSOR
EEV	ELECTRONIC EXPANSION VALVE
DCFAN1 DCFAN2	OUTDOOR DC FAN
HEAT_D	CHASSIS HEATER
HEAT_Y	CRANKCASE HEATER
H-PRO	HIGH PRESSURE SWITCH
L-PRO	LOW PRESSURE SWITCH
SV	REVERSING VALVE
TP	COMP. DISCHARGE TEMP. SENSOR
T3	COIL TEMP. SENSOR
T4	OUTDOOR AMBIENT TEMPERATURE SENSOR
COMP TOP	COMP. TOP OLP TEMP. SENSOR

CN11/CN12	INPUT 230V AC
CN19/CN21	OUTPUT 230V AC
CN24/CN38/CN37	OUTPUT 230V AC
CN53 /CN44	OUTPUT 0-12V DC
CN26/CN29/CN30	INPUT 0-5V DC
CN27	OUTPUT 0-5V DC
CN32/CN10	OUTPUT 0-310V AC
U/V/W	OUTPUT 0-310V AC

Note:

1. EEV2 is only for hyper heat models.
2. Hyper heat 60K model does not have the COMP. TOP OLP TEMP. SENSOR.

Fig. 10 —Wiring Diagrams 37MBRAQ/37MBHAQ Units, Sizes 48K-58K

REFRIGERANT CYCLE DIAGRAMS

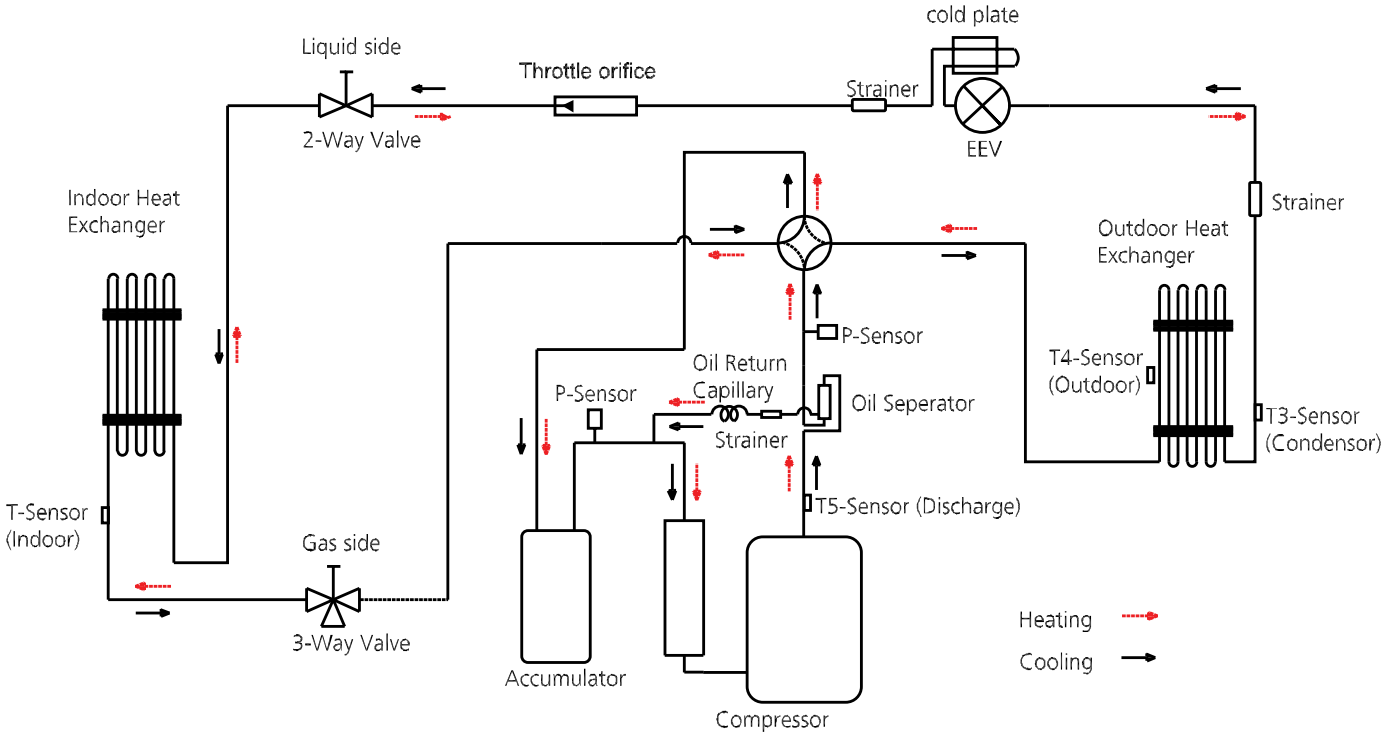

Fig. 11 —Refrigerant Cycle Diagram 37MGRAQ (Sizes 36K-58K)

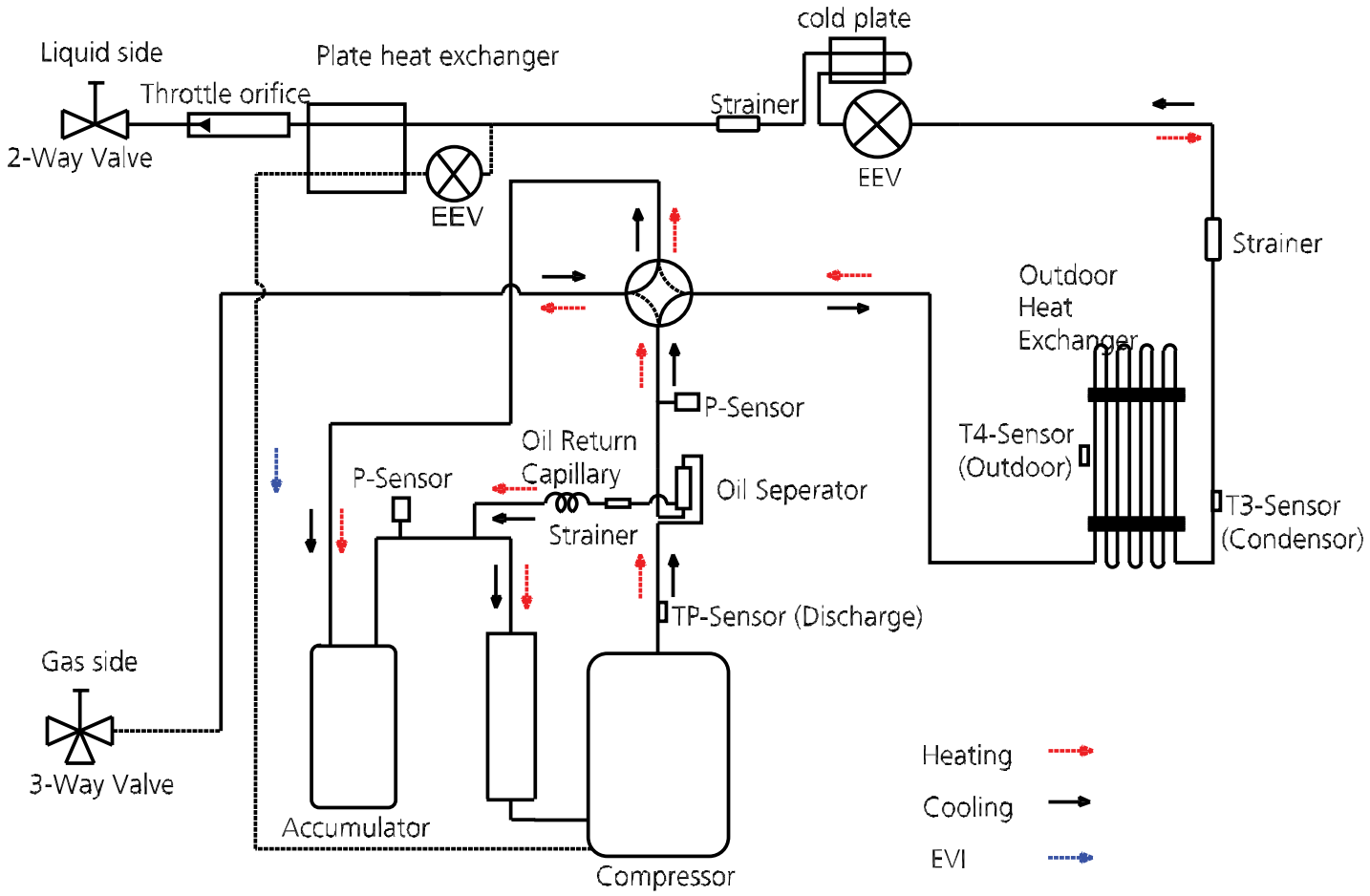

Fig. 12 —Refrigerant Cycle Diagram 37MGHAQ (Sizes 36K-58K)

REFRIGERANT LINES

General Refrigerant Line Sizing

1. The outdoor units are shipped with a full charge of R-454B refrigerant. All charges, line sizing, and capacities are based on runs of 25ft. (7.6 m). For runs over 25 ft. (7.6 m), consult Table NOTE:, below, for the proper charge adjustments.
2. The minimum refrigerant line length between the indoor and outdoor units is 10 ft. (3 m).
3. Refrigerant lines should not be buried in the ground. If it is necessary to bury the lines, not more than 36 in (914 mm) should be buried. Provide a minimum 6in (152 mm) vertical rise to the service valves to prevent refrigerant migration.
4. Suction line must be insulated. Use a minimum of 1/2in. (12.7 mm) thick insulation. Closed-cell insulation is recommended in all long-line applications.
5. Special consideration should be given to isolating interconnecting tubing from the building structure. Isolate the tubing so vibration or noise is not transmitted into the structure.

NOTE: Table 2 and 3 display the following maximum lengths allowed.

Table 2 — Piping and Refrigerant Information (37MBRAQ)

OUTDOOR MODEL		37MBRAQ36AA3	37MBRAQ48AA3	37MBRAQ58AA3
Refrigerant Type	Type	R454B		
Charge Amount	lb. (kg)	5.73 (2.6)	7.94 (3.6)	9.03 (4.1)
Additional refrigerant charge	Oz/ft (g/m)	0.32 (30)	0.32 (30)	0.32 (30)
Liquid Pipe (size - connection type)	In (mm)	3/8 (9.52)	3/8 (9.52)	3/8 (9.52)
Suction Pipe (size - connection type)	In (mm)	3/4 (19)	3/4 (19)	3/4 (19)
Min. Piping Length	ft. (m)	10 (3)	10 (3)	10 (3)
Standard Piping Length	ft. (m)	24.6 (7.5)	24.6 (7.5)	24.6 (7.5)
Max. Piping Length with no additional refrigerant charge per System	ft. (m)	24.6 (7.5)	24.6 (7.5)	24.6 (7.5)
Total Maximum Piping Length per system	ft. (m)	246 (75)	246 (75)	246 (75)
Max. outdoor-indoor height difference (OU higher than IU)	ft. (m)	98.4 (30)	98.4 (30)	98.4 (30)
Max. outdoor-indoor height difference (IU higher than OU)	ft. (m)	98.4 (30)	98.4 (30)	98.4 (30)

NOTE: For piping runs greater than the “Maximum Piping Length with no additional refrigerant charge per System”, see the Additional Refrigerant Charge note in the Long-Line Applications section.

Table 3 — Piping and Refrigerant Information (37MBHAQ)

OUTDOOR MODEL		37MBHAQ36AA3	37MBHAQ48AA3	37MBHAQ58AA3
Refrigerant Type	Type	R454B		
Charge Amount	lb. (kg)	7.94 (3.6)	7.94 (3.6)	9.48(4.3)
Additional refrigerant charge	Oz/ft (g/m)	0.32 (30)	0.32 (30)	0.32 (30)
Liquid Pipe (size - connection type)	In (mm)	3/8 (9.52)	3/8 (9.52)	3/8 (9.52)
Suction Pipe (size - connection type)	In (mm)	3/4 (19)	3/4 (19)	3/4 (19)
Min. Piping Length	ft. (m)	10 (3)	10 (3)	10 (3)
Standard Piping Length	ft. (m)	24.6 (7.5)	24.6 (7.5)	24.6 (7.5)
Max. Piping Length with no additional refrigerant charge per System	ft. (m)	24.6 (7.5)	24.6 (7.5)	24.6 (7.5)
Total Maximum Piping Length per system	ft. (m)	246 (75)	246 (75)	246 (75)
Max. outdoor-indoor height difference (OU higher than IU)	ft. (m)	98.4 (30)	98.4 (30)	98.4 (30)
Max. outdoor-indoor height difference (IU higher than OU)	ft. (m)	98.4 (30)	98.4 (30)	98.4 (30)

NOTE: For piping runs greater than the “Maximum Piping Length with no additional refrigerant charge per System”, see the Additional Refrigerant Charge note in the Long-Line Applications section.

Long Line Applications:

1. No change in line sizing is required.
2. Add refrigerant per the Additional Charge table.

Table 4 – Additional Charge

Unit Size	Indoor Unit Metering Device	Total Line Length ft (m)		Additional Charge oz/ft (g/m)	
		Min	Max	>10-25 ft (3-8m)	>25-213 ft (8-65m)
36K	**None**	10 (3)	246 (75)	None	0.32 (30)
48K					
58K					

SYSTEM EVACUATION AND CHARGING

⚠ CAUTION

UNIT DAMAGE HAZARD

Failure to follow this caution may result in equipment damage or improper operation.

Never use the system compressor as a vacuum pump.

Refrigerant tubes and the indoor coil should be evacuated using the recommended 500 micron deep vacuum method. The alternate triple evacuation method may be used if the procedure outlined below is followed.

NOTE: Always break a vacuum with dry nitrogen.

NOTE: All units have a Master Suction and Liquid Line Service Valve.

USING VACUUM PUMP

1. Completely tighten flare nuts A, B, C, D, E, F, (see Fig. 13). Connect the manifold gage charge hose to a charge port of the low side service valve (see Fig. 13).
2. Connect the charge hose to vacuum pump.
3. Fully open the low side of manifold gage (see Fig. 14).
4. Start the vacuum pump.
5. Evacuate using either the deep vacuum or triple evacuation method.
6. After evacuation is complete, fully close the low side of manifold gage and stop the vacuum pump operation.
7. The factory charge contained in the outdoor unit is good for up to 25 ft. (8 m) of line length. For refrigerant lines longer than 25 ft. (8 m), add refrigerant, up to the allowable length.
8. Disconnect the charge hose from the charge connection of the low side service valve.
9. Fully open service valves B and A (see Fig. 13)
10. Securely tighten the service valve caps.

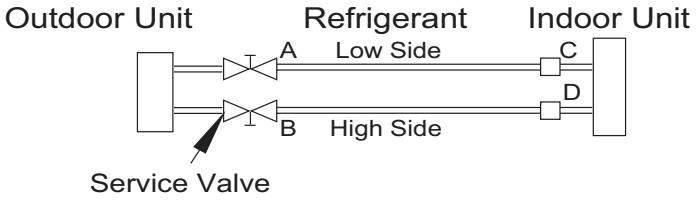

Fig. 13 —Service Valve

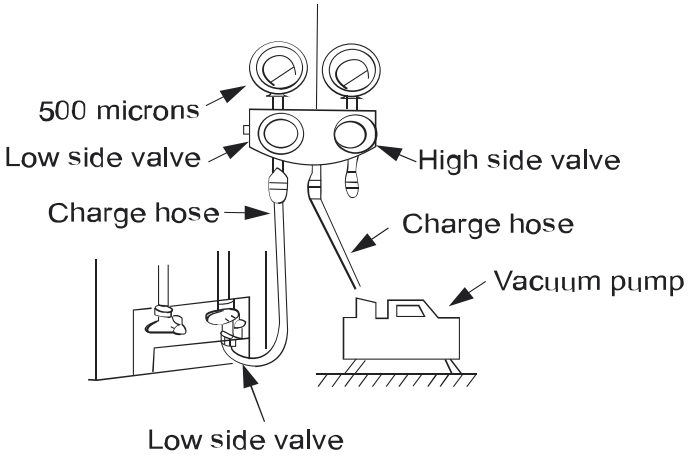

Fig. 14 —Manifold

DEEP VACUUM METHOD

The deep vacuum method requires a vacuum pump capable of pulling a vacuum of 500 micron and a vacuum gauge capable of accurately measuring this vacuum depth. This method is the most positive way of assuring a system is free of air and moisture (see Figure 15).

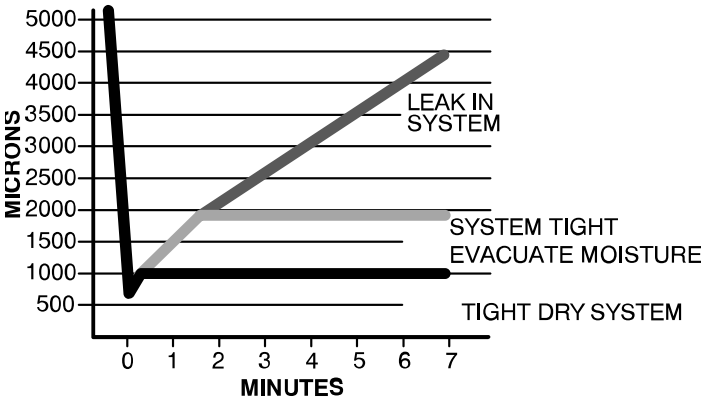

Fig. 15 —Deep Vacuum Graph

TRIPLE EVACUATION METHOD

The triple evacuation method should be used when vacuum pump is not capable of pumping down to 500 microns and system does not contain any liquid water. Refer to Fig. 16 and proceed as follows:

1. Attach refrigeration gauges and evacuate system down to 28 inches of mercury and allow pump to continue operating for an additional 15 minutes.
2. Close service valves and shut off vacuum pump.
3. Connect a nitrogen cylinder and regulator to system and flow nitrogen until system pressure is 2 psig.
4. Close service valve and allow system to stand for 1 hour. During this time, dry nitrogen will be able to diffuse throughout the system absorbing moisture.
5. Repeat this procedure as indicated in Fig. 16. System is now free of any contaminants and water vapor.

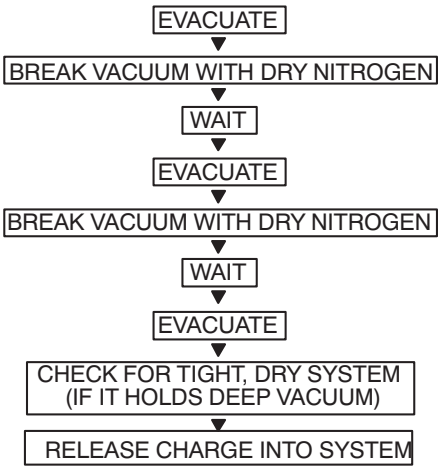

Fig. 16 —Triple Evacuation Method

FINAL TUBING CHECK

Check to be certain factory tubing on both the indoor and outdoor unit has not shifted during shipment. Ensure tubes are not rubbing against each other or any sheet metal. Pay close attention to the feeder tubes, making sure wire ties on feeder tubes are secure and tight.

Manufacturer reserves the right to change, at any time, specifications and designs without notice and without obligations.

ELECTRONIC FUNCTIONS

Abbreviations

- T1: Indoor room temperature
- T2: Coil temperature of indoor heat exchanger middle
- T2B: Coil temperature of indoor heat exchanger outlet
- T3: Coil temperature of condenser
- T4: Outdoor ambient temperature
- T5: Compressor discharge temperature (TP)
- Td: Target temperature

Main Protection

Three Minute Delay for Compressor Restart

Less than a 1 minute delay for the initial start-up and a 3 minute delay for subsequent starts.

Compressor Top Temperature Protection

The unit stops working when the compressor top temp. protector cuts off, and restarts after the compressor top temp. protector resets.

Compressor Discharge Temperature Protection

When the compressor discharge temp. increases, the running frequency is limited per the following rules:

- Compressor discharge temp. T5>239^{0}F(115^{0}C) for 5s, compressor stops and restarts up until T5<194^{0}F(90^{0}C)
- 110<T5<239^{0}F(115^{0}C), decrease the frequency to the lower level every 2 minutes.
- 221^{0}F(105^{0}C)<T5<230^{0}F(110^{0}C), keep running at the current frequency.
- T5<221^{0}F(105^{0}C), no limit for frequency.

Fan Speed is Out of Control

When the indoor fan speed remains low (lower than 300RPM) for 50s, the indoor fan shuts off and restarts 30s later. If the protection mode engages 3 times when the fan motor restarts continuously, the unit stops and the LED displays the failure.

When the outdoor fan speed remains low (lower than 100RPM) or too high (higher than 1500RPM) for 60s, the unit stops and the LED displays the failure. The malfunction clears 30s later.

Inverter Module Protection

The inverter module has a protection function for current, voltage and temperature. If any of these protections engage, the corresponding code displays on the indoor unit and the unit stops working.

Indoor Fan Delayed Open Function

When the unit starts up, the louver is active immediately and the indoor fan opens 10s later. If the unit is running in the HEATING mode, the indoor fan is controlled also by the anti-cold wind function.

Compressor Preheating Functions

Preheating Permitting Condition:

If T4<37.4^{0}F(3^{0}C) when the unit is first powered up within 5 seconds or if T4<37.4^{0}F(3^{0}C) and the compressor has stopped for over 3 hours, the compressor heating cable will work.

Preheating Mode:

A weak current flow through the compressor coil from the compressor wiring terminal, then the compressor is heated without operation.

Preheating Release Condition:

If T4=41^{0}F(5^{0}C) or the compressor starts running, the preheating function stops.

Condenser High Temperature T3 Protection:

- 131^{0}F(55^{0}C) <T3<140^{0}F(60^{0}C), the compressor frequency decreases to the lower level until to F1 and then runs at F1. If T3<129.2^{0}F(54^{0}C), the compressor keeps running at the current frequency.
- T3<125.6^{0}F(52^{0}C), the compressor does not limit the frequency and resumes the former frequency.
- T3>140^{0}F(60^{0}C) for 5 seconds, the compressor stops until T3<125.6^{0}F(52^{0}C).

Evaporator Low Temperature T2 Protection:

- T2<32^{0}F(0^{0}C), the compressor stops and restarts when T2=41^{0}F(5^{0}C).
- 32^{0}F(0^{0}C) < T2<39.2^{0}F(4^{0}C), the compressor frequency is limited and decreases to the lower level
- 39.2^{0}F(4^{0}C)=T2<44.6^{0}F(7^{0}C), the compressor retains the current frequency
- T2>44.6^{0}F(7^{0}C), the compressor frequency is not limited.

Operation Modes and Functions

FAN Mode

1. Outdoor fan and compressor stop
2. Temperature setting function is disabled and no setting temperature appears.
3. Indoor fan can be set to high/med/low/auto
4. The louver operates same as in the COOLING mode.
5. Auto fan

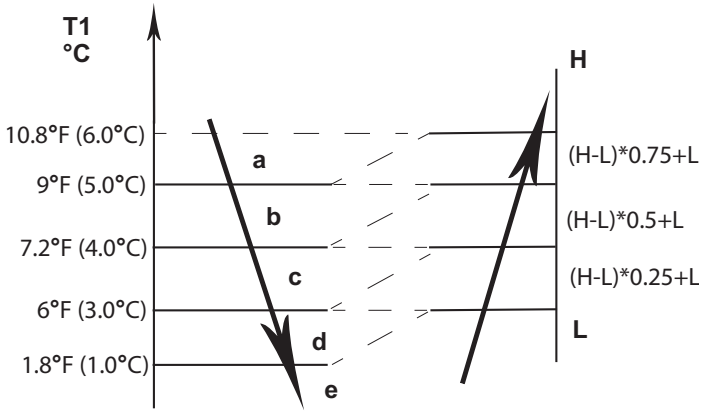

Fig. 17 —FAN Mode

COOLING Mode

Outdoor Fan Running Rules

Fig. 18 —Outdoor Fan Running Rules

In the COOLING mode, the indoor fan runs all the time and the speed can be selected as high, medium, low and auto. The indoor fan is controlled as shown in Fig. 12.

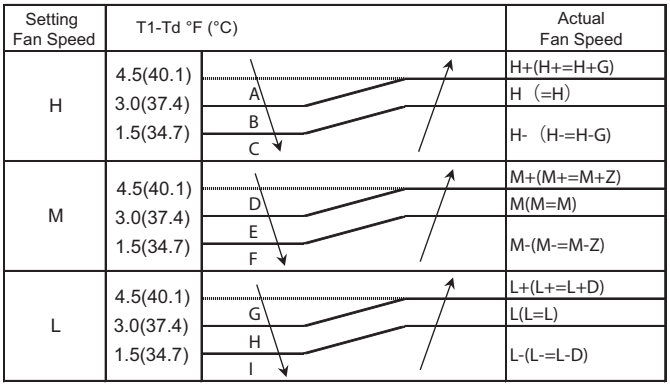

Fig. 19 —Indoor Fan Table

The AUTO Fan function under the COOLING mode acts (see Fig. 13).

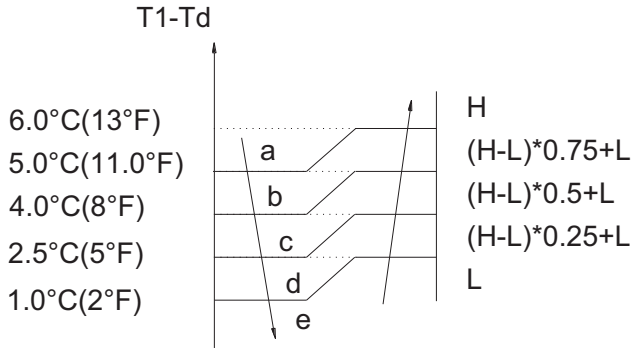

Fig. 20 —AUTO Fan function under the COOLING Mode

HEATING Mode

Outdoor Fan Running Rules

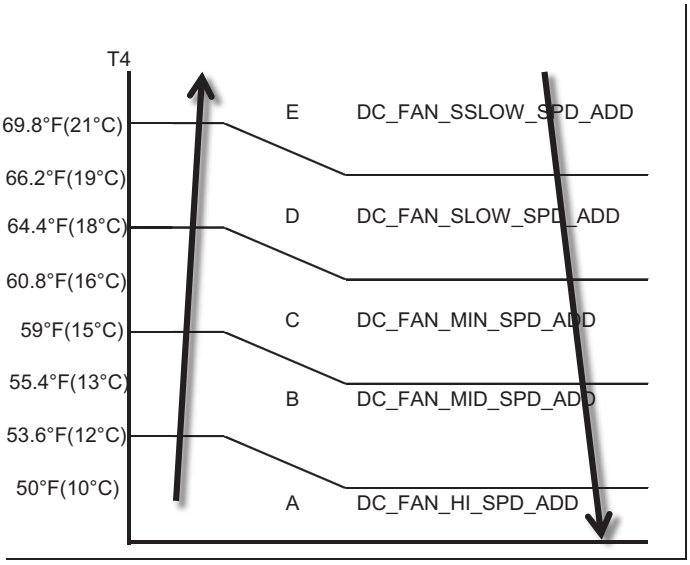

Fig. 21 —Outdoor Fan Running Rules

Indoor Fan Running Rules

When the compressor is on, the indoor fan can be set to high/med/low/auto. And the anti-cold wind function has the priority. The indoor fan is controlled as shown in Fig. 15.

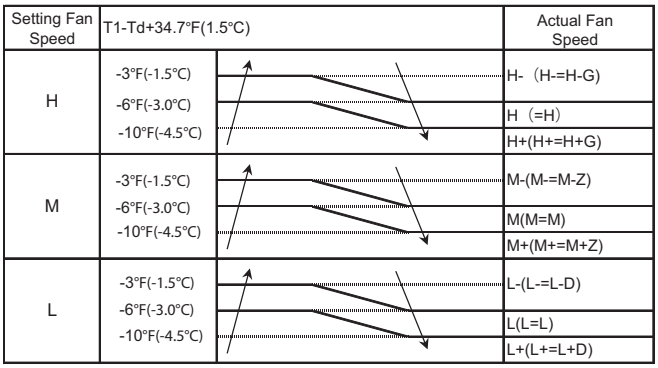

Fig. 22 —Indoor Fan Running Rules

AUTO Fan action in HEATING mode

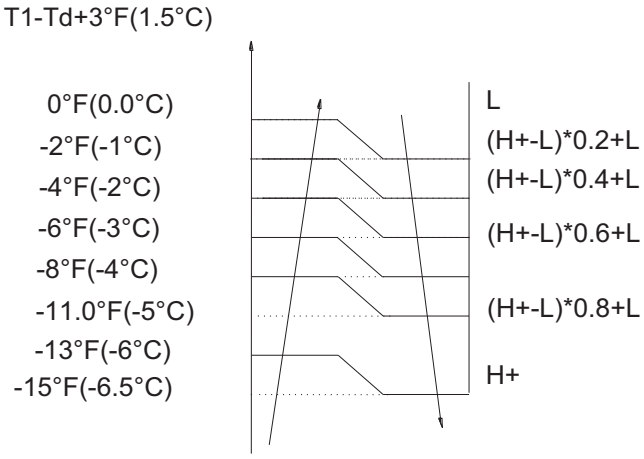

Fig. 23 —AUTO Fan action in HEATING mode

Defrosting Mode

• The unit enters defrosting mode according to the temperature value of condenser temperature(T3) and outdoor ambient temperature(T4) as well as the compressor running time.

• In defrosting mode, the compressor continues to run, the indoor and outdoor motor will cease operation, the defrost light of the indoor unit will turn on, and the "**dF**" symbol is displayed.

• If any one of the following conditions is satisfied, defrosting ends and the machine switches to normal heating mode:

- Condenser temperature(T3) rises above TCDE1.
- Condenser temperature(T3) maintained above TCDE2 for 80 seconds.
- Unit runs for 15 minutes consecutively in defrosting mode.

• If Outdoor ambient temperature(T4) is lower than or equal to -22°C(-7.6°F) and compressor running time is more than TIMING_DEFROST_TIME, if any one of the following conditions is satisfied, defrosting ends and the machine switches to normal heating mode:

- Unit runs for 10 minutes consecutively in defrosting mode.
- Condenser temperature(T3) rises above 10°C/50°F.

• If any one of the following conditions is satisfied, the unit enters defrosting mode:

- If condenser temperature(T3) or outdoor ambient temperature(T4) is lower than -3°C for 30 seconds, Ts-T1 is lower than 5°C and compressor running time is more than EE_TIME_DEFROST7.

- If condenser temperature(T3) or outdoor ambient temperature(T4) is lower than -3°C for 30 seconds and compressor running time is more than EE_ TIME_DEFROST7+30 minutes.

• If any one of the following conditions is satisfied, defrosting ends and the machine switches to normal heating mode:
- Condenser temperature(T3) rises above TCDE1+4°C/7.2°F.
- Condenser temperature(T3) maintained above TCDE2+4°C/7.2°F for 80 seconds.
- Unit runs for 15 minutes consecutively in defrosting mode.

Evaporator Coil Temperature Protection

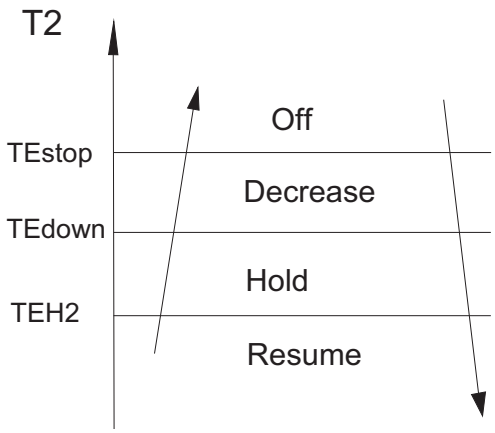

Fig. 24 —Evaporator Coil Temperature Protection

Decrease: Decrease the running frequency to the lower level

Hold: Keep the current frequency

Resume: No limitation for frequency

Auto Mode

This mode can be chosen with remote controller and the setting temperature can be changed between 62.6~86°F(17~30°C).

In **AUTO** mode, the machine either selects **COOLING, HEATING** or **FAN-Only** mode according to DT (DT=T1-Ts).

ΔT=T1-Ts	**RUNNING MODE**
ΔT≥^{0}F(1^{0}C)	**COOLING MODE**
-2°F (-1^{0}C) < ΔT <3 (2°F 1^{0}C)	**FAN-ONLY MODE**
ΔT≤-1^{0}C (-2^{0}F)	**HEATING MODE**

The indoor fan runs in the **AUTO** Fan mode of the relevant mode. The louver operates same as in relevant mode. If the machine switches mode between heating and cooling, the compressor will continue to stop for 15 minutes and then choose a mode according to T1-Ts. If the setting temperature is modified, the machine selects a running function once again.

DRYING Mode

DRYING mode works the same as **COOLING** mode in **BREEZE** speed. All protections are active and the same as that in the **COOLING** mode.

Auto-Restart Function

The indoor unit is equipped with an auto-restart function, which is carried out through an auto-restart module. In case of a sudden power failure, the module memorizes the setting conditions before the power failure. The unit resumes the previous operation setting (not including sleep function) automatically after 3 minutes when power returns.

Defrosting Mode

The unit enters defrosting mode according to the temperature value of condenser temperature (T3) and outdoor ambient temperature (T4) as well as the compressor running time.

- In defrosting mode, the compressor continues to run, the indoor and outdoor motor will cease operation, the defrost light of the indoor unit will turn on, and the "dF " symbol is displayed.
- If any one of the following conditions is satisfied, defrosting ends and the machine switches to normal heating mode:
- Condenser temperature (T3) rises above TCDE1.
- Condenser temperature (T3) maintained above TCDE2 for 80 seconds.
- Unit runs for 15 minutes consecutively in defrosting mode.
- If Outdoor ambient temperature (T4) is lower than or equal to -7.6°F (-22°C) and compressor running time is more than TIMING_DEFROST_TIME, if any one of the following conditions is satisfied, defrosting ends and the machine switches to normal heating mode:
- Unit runs for 10 minutes consecutively in defrosting mode.
- Condenser temperature (T3) rises above 50°F/ 10°C.
- If any one of the following conditions is satisfied, the unit enters defrosting mode
- If condenser temperature (T3) or outdoor ambient temperature (T4) is lower than -3°C for 30 seconds, Ts-T1 is lower than 5°C and compressor running time is more than EE_TIME_DEFROST7_ ADD.
- If condenser temperature (T3) or outdoor ambient temperature(T4) is lower than -3°C for 30 seconds and compressor running time is more than EE_ TIME_DEFROST7_ADD+30 minutes.
- If any one of the following conditions is satisfied, defrosting ends and the machine switches to normal heating mode:
  - Condenser temperature(T3) rises above TCDE1 7.2°F/+4°C.
  - Condenser temperature(T3) maintained above TCDE2 7.2°F/+4°C for 80 seconds.
  - Unit runs for 15 minutes consecutively in defrosting mode.

Enhanced Defrost

Enhanced Defrost is a feature that is enabled by turning on dipswitch SW4 on the 24 volt ODU board. This feature is designed to be used for problem areas of defrosting (near water sources and areas of high humidity during cold outdoor conditions). When enabled, the total heating cumulative run time will be reduced to 40 minutes, allowing for defrosting to occur at the 40th minute providing the T3 or T4 temperature is 26F or cooler at that time. The defrost termination temperature at T3 will also increase to 77F to ensure better completion of defrost prior to terminating defrost.

NOTE: Enhanced defrost is not available for this unit.

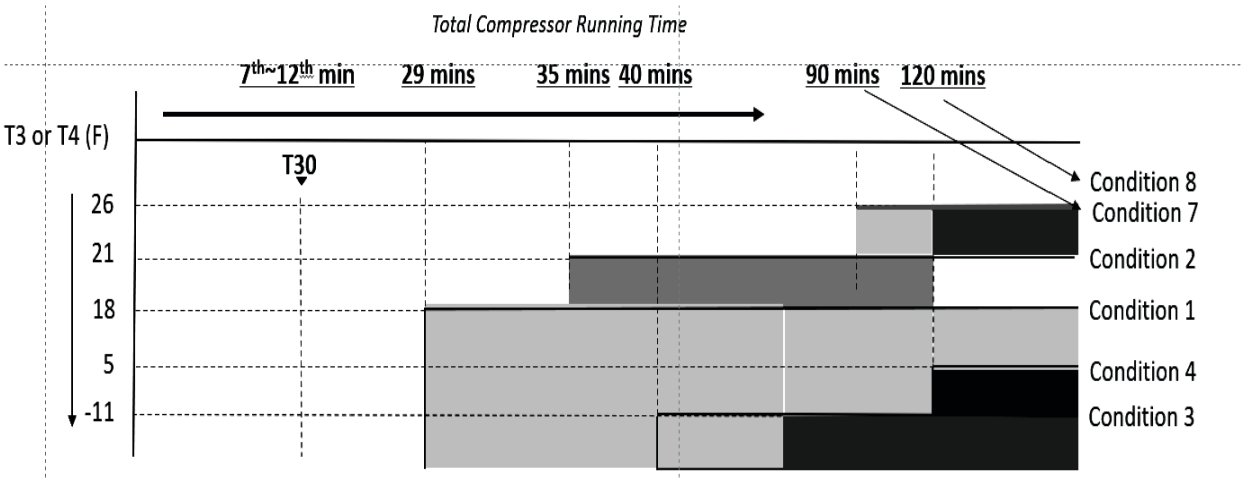

Condition 1	Total compressor running time is 29 mins	T3 ≤ 18F, T3 is less than/equal to T30 - 4.5F (2.5C) and T4＞-8F
Condition 2	Total compressor running time is 35 mins	T3 ≤ 21F, T3 less than/equal to T30 -5.4F (3C) and T4＞-8F
Condition 3	Total compressor running time is 29 mins	T3 ≤ -11F and last for 3 mins, and T4＞-8F
Condition 4	Total compressor running time is 120 mins	T3 ≤ 5F and T4＞-8F
Condition 5	Cumulative running 30 mins	T4-T3 > (0.5T4 + 5F) and T3 ≤ 10F, T4＞-8F
Condition 6	Cumulative running 8 hours	T4≤ -8F, with T4 operating without malfunction
Condition 7	Cumulative running time 90 mins and diff. of Ts-T1 ≤ 9F Cumulative running time 120 minutes (if Ts-T1 diff. above not applicable)	T3 or T4 ≤ 26F last for 30 seconds
*Condition 8	If enhanced defrost is ON, cumulative running time is 40 minutes (T30 does not apply) *Only applies to Crossover ODU's. Enable enhanced defrost by turning on dipswitch 4 in the ODU.	T3 or T4 ≤ 26F last for 30 seconds

NOTE: Enhanced defrost is not available for this unit.

QUICK MAINTENANCE BY ERROR CODE

If you do not have the time to test which specific parts are faulty, you can directly change the required parts according the error code. You can find the parts to replace by error code in the following table.

Part Requiring Replacement	Error Code								
	EL 01	EC 50	EC 51	EC 52	EC 53	EC 54	EC 55	EC 56	EC 57
Indoor PCB	√	x	x	x	x	x	x	x	x
Outdoor PCB	√	√	√	√	√	√	√	√	√
ODU coil temp. sensor	x	√	x	√	x	x	x	x	x
ODU ambient temp. sensor	x	√	x	x	√	x	x	x	x
COMP. discharge temp. sensor	x	√	x	x	x	√	x	x	x
IPM module temperature sensor	x	x	x	x	x	x	√	x	x
IDU coil outlet temp. sensor	x	x	x	x	x	x	x	√	x
Refrigerant pipe temperature sensor	x	x	x	x	x	x	x	x	√
Condenser temperature sensor	x	x	x	x	x	x	x	x	x
Reactor	√	x	x	x	x	x	x	x	x
IPM module board	√	x	x	x	x	x	x	x	x

Part Requiring Replacement	Error Code							
	EC 07/EC 71	PC 00	PC 01/PC 10/ PC 11/PC 12	PC 02	PC 08 /PC 42 /PC 44/ PC 46/ PC 49	PC 0F	PH 90	PH 91
Outdoor PCB	√	√	√	√	√	√	x	x
Outdoor fan motor	√	√	x	x	√	x	x	x
Reactor or inductance	x	√	√	x	√	√	x	x
Compressor	x	√	x	x	x	x	x	x
IPM module board	x	√	√	x	√	x	x	x
Bridge rectifier	x	√	√	x	√	x	x	x
Evaporator coil temperature sensor	x	x	x	x	x	x	√	√
PFC module	x	x	x	x	x	√	x	x
Additional refrigerant	x	x	x	x	x	x	x	x
Over load protector	x	x	x	√	x	x	x	x
ODU ambient temp. sensor	x	x	x	x	x	x	x	x
Refrigerant pipe temperature sensor	x	x	x	x	x	x	x	x
Indoor fan	x	x	x	x	x	x	√	x
Indoor PCB	x	x	x	x	x	x	√	√

Manufacturer reserves the right to change, at any time, specifications and designs without notice and without obligations.

Part Requiring Replacement	Error Code							
	PC 40	EC 72	PC 43	PC 45	Pc 06	Pc 0a	PC 30	pc 31
Outdoor PCB	√	√	√	x	√	√	√	√
Outdoor fan motor	x	√	x	x	x	√	√	√
ODU coil temp. sensor	x	x	x	x	x	√	x	x
COMP. discharge temp. sensor	x	x	x	x	√	x	x	x
Compressor	x	x	√	x	x	x	x	x
IPM module board	x	x	x	√	x	x	x	x
Additional refrigerant	x	x	x	x	√	√	x	√
Electric control box	√	x	x	x	x	x	x	x
High pressure switch	x	x	x	x	x	x	√	x
Low pressure switch	x	x	x	x	x	x	x	√

GENERAL TROUBLESHOOTING

SAFETY CAUTION

WARNING

Be sure to turn off all power supplies or disconnect all wires to avoid electric shock. While checking indoor/outdoor PCB, equip yourself with anti-static gloves or wrist strap to avoid damage to the board.

WARNING

Before attempting to work on serviceable electronic components, wait 10 minutes after removing power to the ODU in order to ensure that the capacitors have fully discharged. Failure to do so may result in bodily harm or death.

This section provides the required flow charts to troubleshoot problems.

NOTE: Information required in the diagnoses can be found either on the wiring diagrams or in the appendix.

Required Tools

The following tools are needed when diagnosing the units:

- Digital multimeter
- Screw drivers (Phillips and straight head)
- Needle-nose pliers
- Refrigeration gauges
- Wrenches

Recommended Steps

1. Refer to the diagnostic hierarchy charts below and determine the problem at hand.
2. Go to the chart listed in the diagnostic hierarchy and follow the steps in the chart for the selected problem.

For the ease of service, the systems are equipped with diagnostic code display LED's on both the indoor and outdoor units. The outdoor

diagnostic display is on the outdoor unit board and is limited to very few errors. Refer to the Indoor Unit's Service Manual to determine the error code display method. If possible always check the diagnostic codes displayed on the indoor unit first.

Problems may occur that are not covered by a diagnostic code, but are covered by the diagnostic flow charts. These problems are typical air conditioning mechanical or electrical issues that can be corrected using standard air conditioning repair techniques.

For problems requiring measurements at the control boards, note the following:

1. Always disconnect the main power.
2. When possible check the outdoor board first.
3. Start by removing the outdoor unit top cover.
4. Reconnect the main power.
5. Probe the outdoor board inputs and outputs with a digital multi-meter referring to the wiring diagrams.
6. Connect the red probe to hot signal and the black probe to the ground or negative.
7. Note that some of the DC voltage signals are pulsating voltages for signal. This pulse should be rapidly moving at all times when there is a signal present.
8. If it is necessary to check the indoor unit board, you must start by disconnecting the main power.
9. Remove the front cover of the unit and then control box cover.
10. Carefully remove the indoor board from the control box. Place it face up on a plastic surface (not metal).
11. Reconnect the main power and repeat steps 5, 6, and 7.
12. Disconnect the main power before reinstalling the board to avoid shock hazard and board damage.

Dr. SMART - Inverter Test Tool

NOTE: If using the inverter test tool for troubleshooting, shut off power, remove the electrical panel and locate the cable that is already connected to the test port on the outdoor unit. Connect the test tool to the cable with the connector provided with the test tool. After the maintenance is completed, insert the female end back into the port.

For the R454B single zone ODU with capacity less than 24K, there will be the test tool connector. For 24K HH and 30K-60K single zone ODU, there is a diagnosis/check board which has digital display on it, you can read the parameters from it directly.

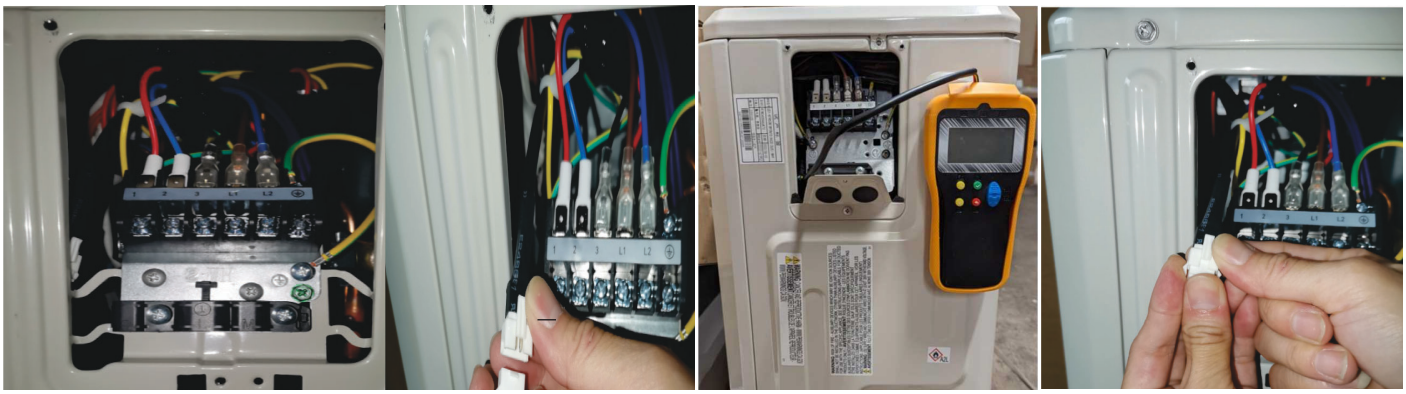

Step 1 Step 2 Step 3 Step 4

Fig. 25 —Inverter Test Tool Maintenance

Connect the Dr. SMART tool to the white terminal as shown in Step 3 above.

Fig. 26 —Dr. SMART Tool

NOTE: These pictures is for reference only. Actual appearance may vary.

ERROR CODES

Error Display

Display	Indoor/Outdoor Code	Malfunction or Protection	Solution (Refer to Page)
df	N/A	Defrosting	Normal Display, not error code
FC	N/A	Forced cooling	
FH CC	IDU	Refrigerant Sensor Error	page 60
EC 07 / EC 71	ODU	Fan speed out of control	page 34
EC 51	ODU	EEPROM parameter error	page 32
EH 00 / EH0A	IDU & ODU	EEPROM Malfunction Error Diagnosis and Solution	page 32
EC 52	ODU	Coil temp. sensor(T3) error	page 38
EC 53	ODU	Ambient temp. sensor(T4) error	page 38
EC 54	ODU	COMP. discharge temp. sensor (TP) error	page 38
EC 55	ODU	IPM module temperature sensor malfunction	page 39
EL 0C	IDU & ODU	System Lacks Refrigerant Diagnosis and Solution	page 40
EH b3	IDU	Communication Malfunction Between Wire and Master Control	page 59
EH bA	IDU & ODU	Communication Malfunction Between Wire and Master Control	page 60
EH C1	IDU	Refrigerant Sensor Detects Leakage	page 61
EH C2	IDU	Refrigerant Sensor is Out of Range and Leakage is Detected	page 61
EH 0b	IDU	IDU Main Control Board and Display Board Communication Error Diagnosis and Solution	page 62
EH 0E	IDU	Water-Level Alarm Malfunction Diagnosis and Solution	page 41
EC 57	ODU	Refrigerant pipe temperature sensor error	page 38
EC 5C	ODU	Suction Transducer Failure	page 37
EL 01	IDU & ODU	Communication error	page 33
EL 16	ODU	Communication malfunction between adapter board and ODU main board	page 63
FL 09	IDU & ODU	Mismatch between the new and old platforms diagnosis and solution	page 63
PC 00	ODU	IPM module protection	page 42
PC 01	ODU	ODU Voltage Protection Diagnosis and Solution	page 43
PC 02	ODU	Compressor top (or IPM) temp. protection	page 46
PC 04	ODU	Inverter Compressor Drive Error Diagnosis and Solution	page 49
PC 06	ODU	Discharge temperature protection of compressor	page 54
PC 08	ODU	Outdoor overcurrent protection	page 55
PC 0A	ODU	High temperature protection of condenser	page 56
PC 0F	ODU	PFC module protection	page 57
PC 0L	ODU	Low Ambient Temperature Protection	page 59
PC 10	ODU	Low AC voltage protection	page 58
PC 11	ODU	Main control board DC bus high voltage protection	page 58
PC 12	ODU	Main control board DC bus high voltage protection /341 MCE error	page 58
PC 03	IDU	Pressure Protection (low or high pressure)	page 47
PC 30	ODU	System high pressure protection	page 47
PC 31	ODU	Low Pressure Protection	page 47
PC 40	ODU	Communication error between ODU main chip and compressor driven chip	page 50
PC 41	ODU	Compressor current sampling failure	page 51
PC 42	ODU	Compressor start failure of outdoor unit	page 55

Manufacturer reserves the right to change, at any time, specifications and designs without notice and without obligations.

Display	Indoor/Outdoor Code	Malfunction or Protection	Solution (Refer to Page)
PC 43	ODU	Compressor lack phase protection	page 52
PC 44	ODU	Zero speed protection	page 53
PC 45	ODU	IR chip drive failure	page 53
PC 46	ODU	Compressor speed has been out of control	page 55
PC 49	ODU	Compressor overcurrent failure	page 55
LC 06	ODU	High temperature protection of Inverter module (IPM)	page 46
PH 90	IDU & ODU	High temperature protection of evaporator	page 64
PH 91	IDU & ODU	Low temperature protection of evaporator	page 65

OUTDOOR UNIT DISPLAY

Locate the display board in the ODU to access the point check functions in the Outdoor Unit Display table that follows. The black button located on the display board (See red arrow, Fig. 27) should be used for each number of presses in the table.

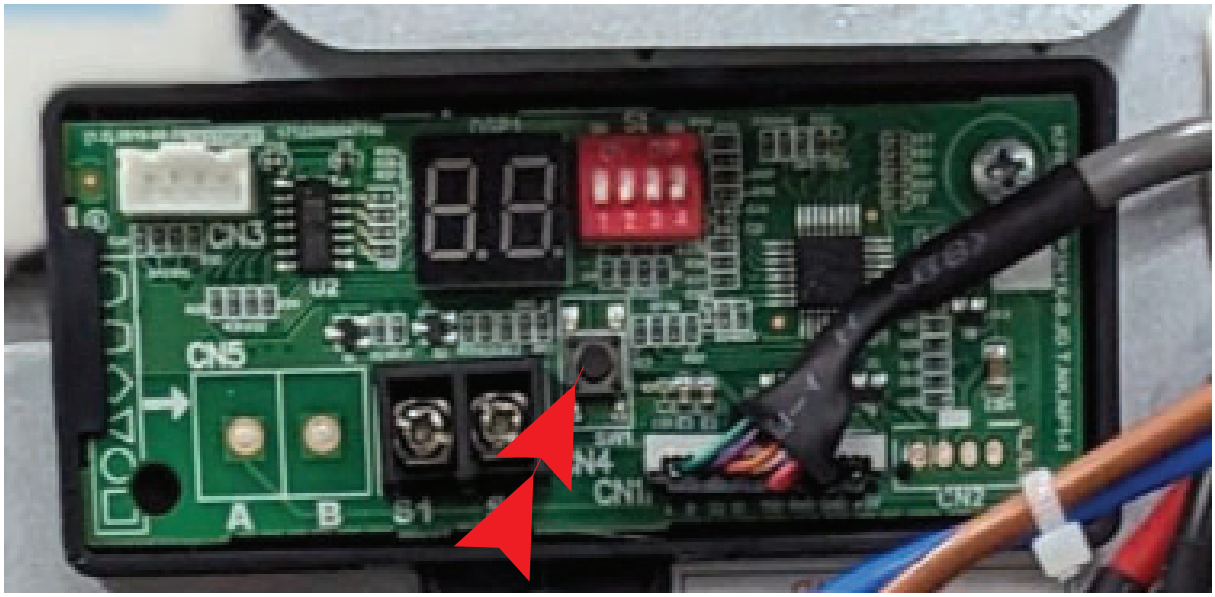

Fig. 27 —Outdoor Unit Display Board

OUTDOOR UNIT DISPLAY (CONT)

Number of Presses	Display	Remark
00	Normal display	Displays running frequency, running state, or malfunction code
01	Indoor unit capacity demand code	Actual data*HP*10 If capacity demand code is higher than 99, the digital display tube will show single digit and tens digit. (For example, the digital display tube show “5.0”,it means the capacity demand is 15. the digital display tube show “60”,it means the capacity demand is 6.0) S communication, the digital display tube will show: “--”
02	Amendatory capacity demand code	
03	The frequency after the capacity requirement transfer	
04	The frequency after the frequency limit	
05	The frequency of sending to 341 chip	
06	Indoor unit evaporator temperature (T2)	If the temp. is lower than -9°C, the digital display tube will show “-9”. If the temp. is higher than 70°C, the digital display tube will show “70”. If the indoor unit is not connected, the digital display tube will show: “--”
07	Condenser pipe temp.(T3)	
08	Outdoor ambient temp.(T4)	
09	Compressor discharge temp.(Tp)	The display value is between 0~199°C. If the temp. is lower than 0°C, the digital display tube will show “0”.If the temp. is higher than 99°C, the digital display tube will show single digit and tens digit. (For example, If the display shows 0.5, so 0.5 multiplied by 10 to become 5, then added to 100 to become 105°C.)
10	AD value of current	The display value is a hex number. For example, the digital display tube shows “Cd”, so $C*16^1+d*16^0=12*16+13=205$, it means AD value is 205. AD value is detected by the chip.
11	AD value of voltage	
12	Indoor unit running mode code	S communication: Standby:0, Cooling:1, Heating:2, Fan only 3, Drying:4, Forced cooling:6, Defrosting: 7, 485 communication: Standby:0, Fan only 1,Cooling:2, Heating:3, Forced cooling:4, Drying:6, Self clean:8
13	Outdoor unit running mode code	
14	EXV open angle	Actual data/4. If the value is higher than 99, the digital display shows single and double digits. For example, if the digital display shows “2.0”, so 2.0 multiplied by 10 to become 20, then added to 100 to become 120, the EXV open angle is 120×4=480p.
15	Frequency limit symbol	Bit7: Frequency limit caused by IGBT radiator Bit6: Frequency limit caused by PFC Bit5: Frequency limit caused by high temperature of T2. Bit4: Frequency limit caused by low temperature of T2. Bit3: Frequency limit caused by T3. Bit2: Frequency limit caused by Tp. Bit1: Frequency limit caused by current Bit0: Frequency limit caused by voltage The display value is a hexidecimal number. For example, the digital display show 2A, then Bit5=1, Bit3=1, and Bit1=1. This means that a frequency limit may be caused by T2, T3, or the current.
16	Outdoor unit fan motor state	Off: 0, Turbo:1 High speed:2, Med speed: 3, Low speed: 4, Breeze:5, Super breeze: 6 other speed:7

Manufacturer reserves the right to change, at any time, specifications and designs without notice and without obligations.

Number of Presses	Display	Remark
17	IGBT radiator temp.	The display value is between 0~130°C. If the temp. is higher than 99°C, the digital display tube will show single digit and tens digit. (For example, the digital display tube show “0.5”,it means the IGBT radiator temp. is 105°C. the digital display tube show “1.6”,it means the IGBT radiator temp. is 116°C)
18	Indoor unit number	The indoor unit can communicate with outdoor unit well. General:1, Twins:2
19	Evaporator pipe temp. T2 of 1# indoor unit	If the temp. is lower than 0°C, the digital display tube will show “0”.If the temp. is higher than 70°C, the digital display tube will show “70”. If the indoor unit is not connected, the digital display tube will show: “--”(heating T2, cooling T2B) S communication, the digital display tube will show: “--”
20	Evaporator pipe temp. T2 of 2# indoor unit	
21	Reserved	
22	1# Indoor unit capacity demand code	Actual data*HP*10 If capacity demand code is higher than 99, the digital display tube will show single digit and tens digit. (For example, the digital display tube show “5.0”,it means the capacity demand is 15. the digital display tube show “60”,it means the capacity demand is 6.0). If the indoor unit is not connected, the digital display tube will show: “--” S communication, the digital display tube will show: “--”
23	2# Indoor unit capacity demand code	
24	Reserved	
25	Room temp. T1 of 1# indoor unit	If the temp. is lower than -9°C, the digital display tube will show “-9”. If the temp. is higher than 70°C, the digital display tube will show “70”. If the indoor unit is not connected, the digital display tube will show: “--” S communication, the digital display tube will show: “--”
26	Room temp. T1 of 2# indoor unit	If the temp. is lower than 0°C, the digital display tube will show “0”.If the temp. is higher than 70°C, the digital display tube will show “70”. If the indoor unit is not connected, the digital display tube will show: “--” S communication, the digital display tube will show: “--”
27	Average room temp. T1	If the temp. is lower than 0°C, the digital display tube will show “0”.If the temp. is higher than 70°C, the digital display tube will show “70”.
28	Reason of stop	
29	Evaporator pipe temp. T2B of 1# indoor unit	If the temp. is lower than -9 °C, the digital display tube will show “-9”.If the temp. is higher than 70°C, the digital display tube will show “70”. If the indoor unit is not connected, the digital display tube will show: “--” S communication, the digital display tube will show: “--”
30	Evaporator pipe temp. T2B of 2# indoor unit	If the temp. is lower than 0 °C, the digital display tube will show “0”. If the temp. is higher than 70°C, the digital display tube will show “70”. If the indoor unit is not connected, the digital display tube will show: “--” S communication, the digital display tube will show: “--”

Manufacturer reserves the right to change, at any time, specifications and designs without notice and without obligations.

TROUBLESHOOTING BY ERROR CODE

EH 00/ EH 0A / EC 51 (EEPROM Malfunction Error Diagnosis and Solution)

Description: Indoor or outdoor PCB main chip does not receive feedback from EEPROM chip.

Recommended parts to prepare: Indoor PCB, Outdoor PCB

Troubleshooting and repair:

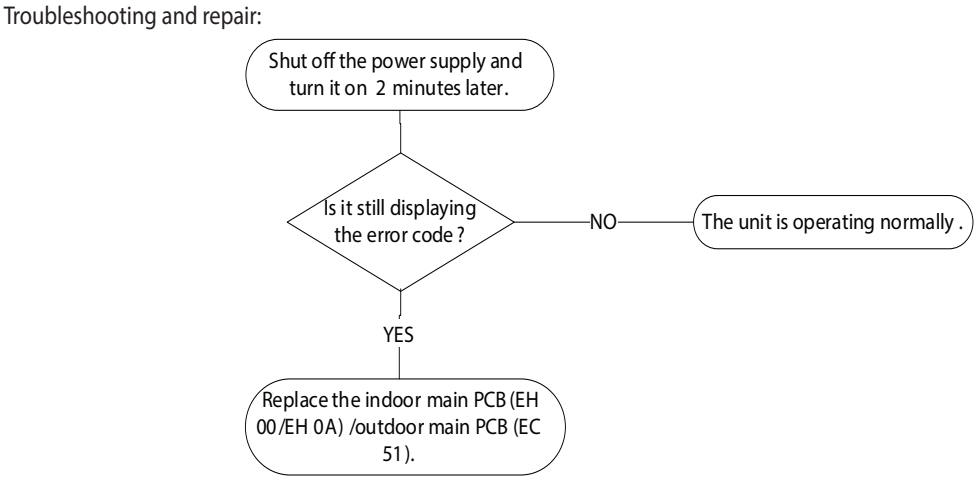

Fig. 28 —EC 51

Remarks:
EEPROM: A read-only memory whose contents can be erased and reprogrammed using a pulsed voltage.
The location of the EEPROM chip on the outdoor PCB is shown in the following image:

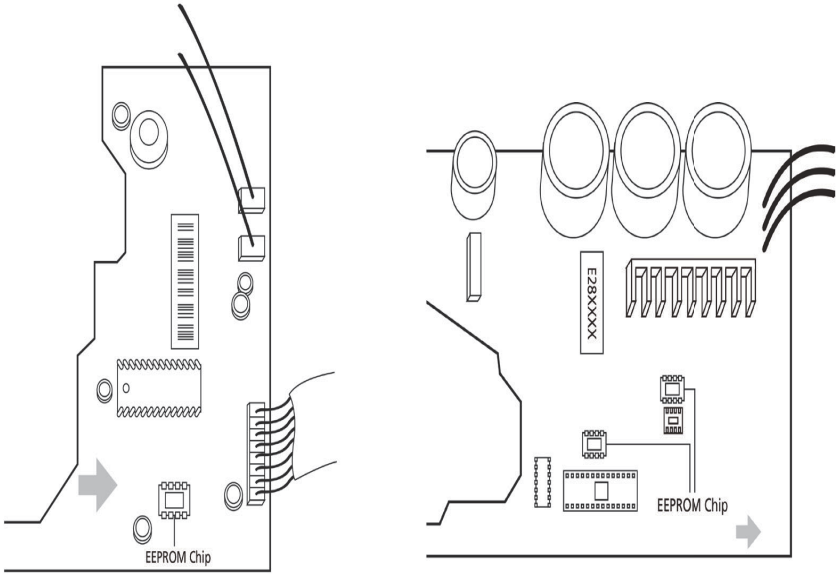

Fig. 29 —Location of EPROM Chip

NOTE: This picture is only for reference, actual appearance may vary.

IMPORTANT: Troubleshooting and repair of compressor driven chip EEPROM parameter error sand communication errors between outdoor main chip and compressor driven chip are same as EC 51.

EL 01 (Indoor and Outdoor Unit Communication Error Diagnosis and Solution)

Description: Indoor unit can not communicate with outdoor unit.

Recommended parts to prepare: Signal Wires, Magnetic Ring, Indoor PCB, Outdoor PCB

Troubleshooting for RS485 Communication Loss
:

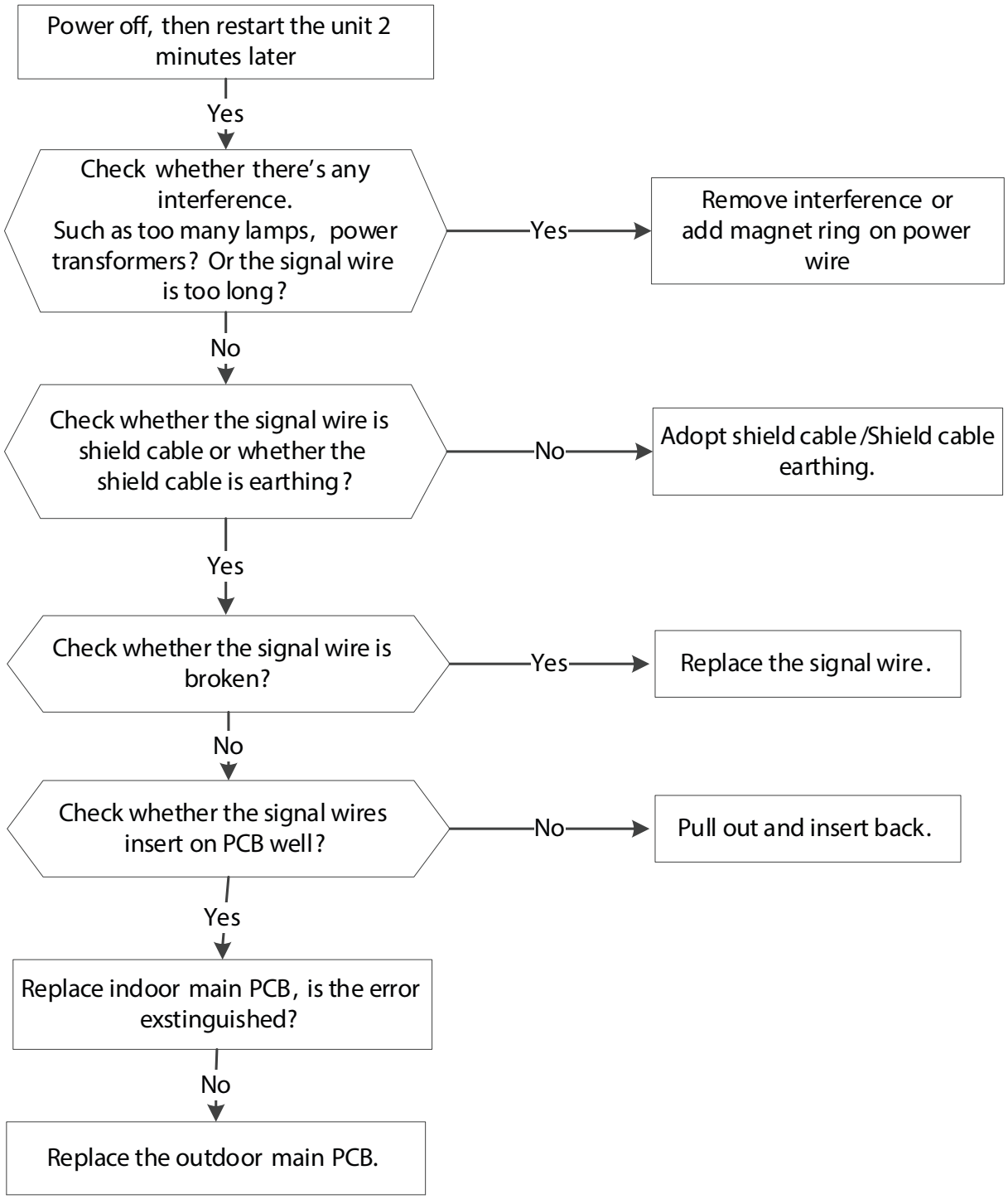

EH03 / EC 07 / EC 71 (Fan Speed Is Operating Outside of Normal Range Diagnosis and Solution)

Description: When indoor / outdoor fan speed keeps too low or too high for a certain time, the LED displays the failure code and the AC turns off.

Recommended parts to prepare: Connection wires, Fan assembly, Fan motor, PCB

Troubleshooting and repair:

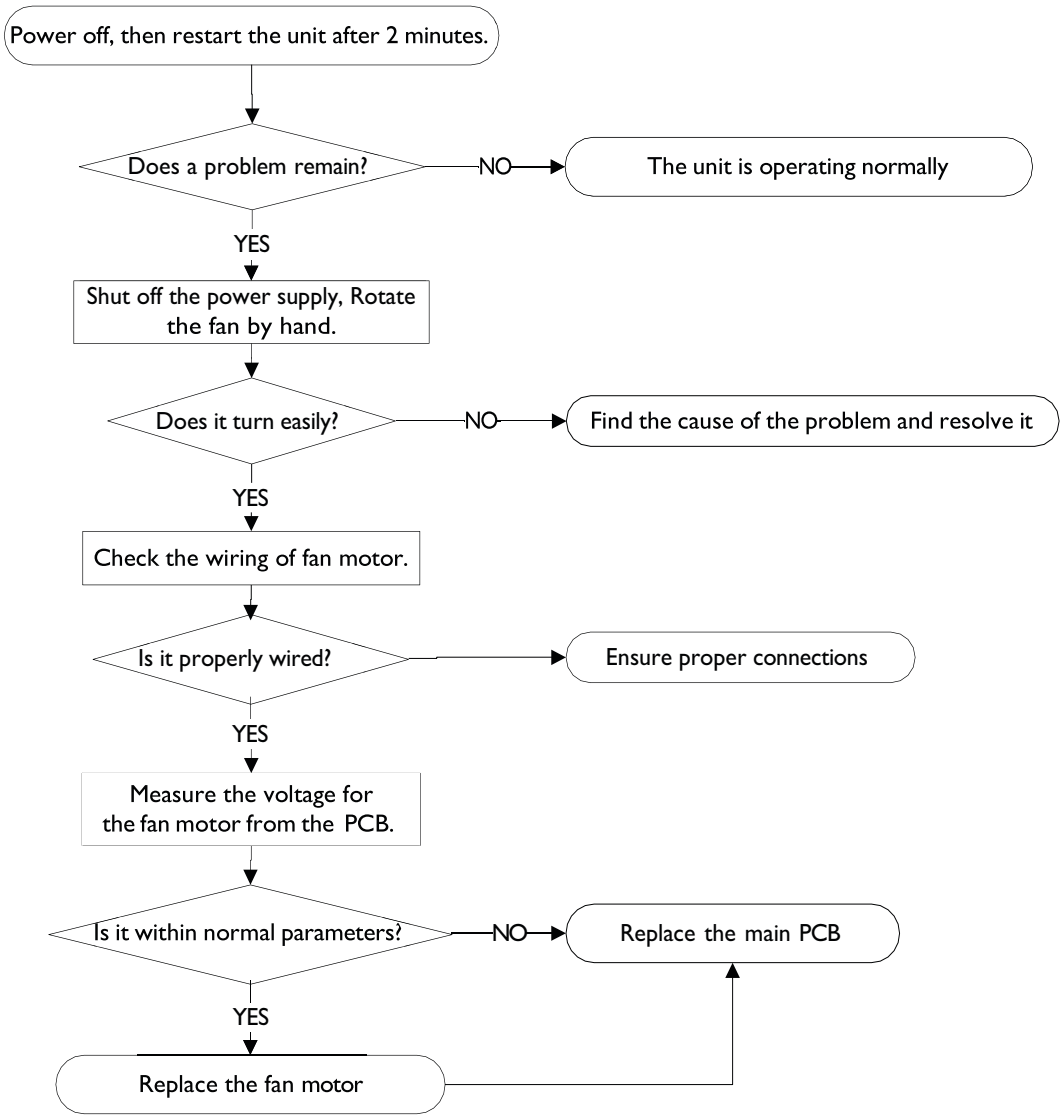

Index

1. Indoor or Outdoor DC Fan Motor (control chip is in fan motor)
   With the power on and when the unit is in standby, measure the voltage of pin1- pin3, pin4- pin3 in the fan motor connector. If the value of the voltage is not in the range shown in below table, the PCB needs to be replaced.

No.	Color	Signal	Voltage
1	Red	Vs/Vm	192V~380V
2	—	—	—
3	Black	GND	0V
4	White	Vcc	13.5-16.5V
5	Yellow	Vsp	0~6.5V
6	Blue	FG	13.5-16.5V

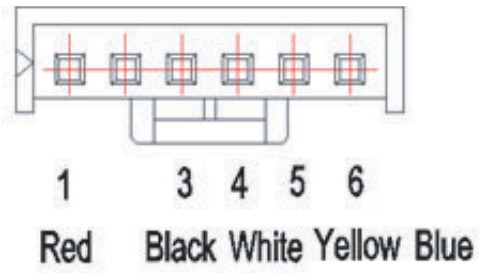

Fig. 30 —Fan Motor Connector, Pin Location

2. Outdoor DC Fan Motor (control chip is in outdoor PCB)
   Release the UVW connector. Measure the resistance of U-V, U-W, V-W. If the resistances are not equal to each other, the fan motor needs to be replaced. Otherwise, the PCB needs to be replaced.

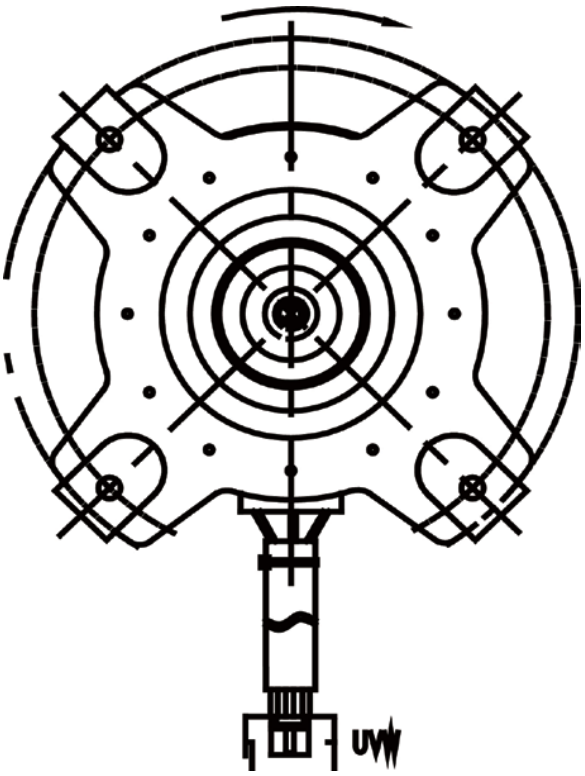

Fig. 31 —UVW Connector

EC 72 Lack phase failure of outdoor DC fan motor

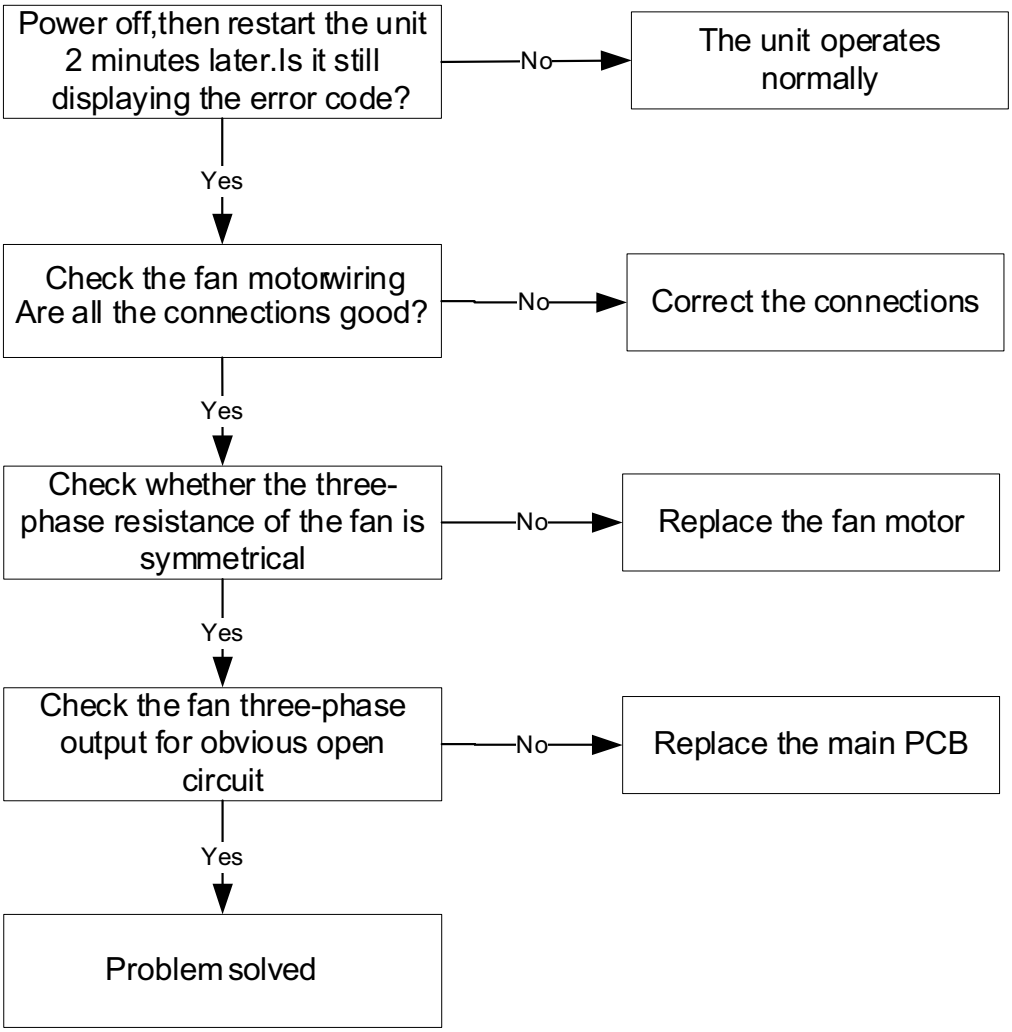

EC 5C Suction Transducer is in open circuit or has short circuited (for crossover units) diagnosis and solution

Description: If the sampling voltage is lower than 2V or higher than 254V, the LED displays the failure code.

Recommended parts to prepare:

- **Connection wires**
- **Sensor**
- **Outdoor PCB**

Troubleshooting and repair:

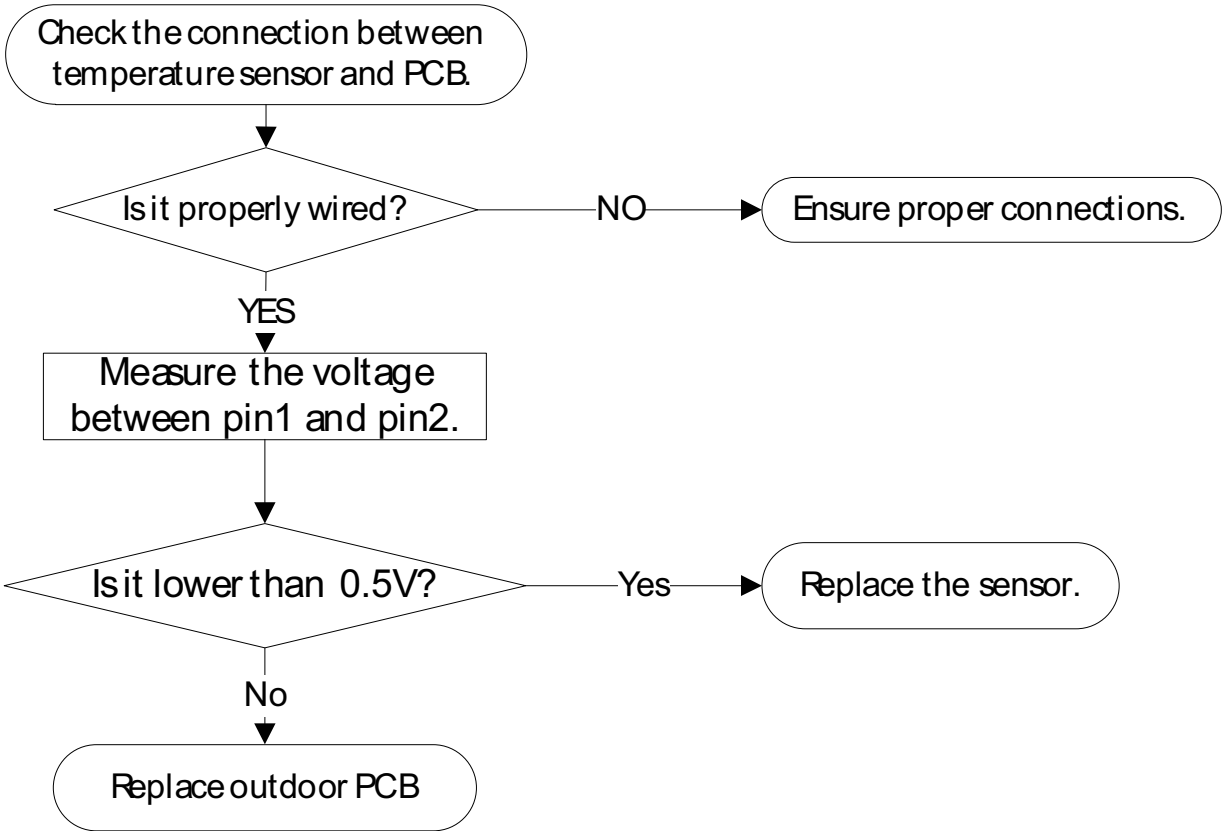

EC 53/ EC 52/ EC 54/ EC 56/ EC 57/ EC 50/ EC 5A/ EC 5B/ EC 5E (Open Circuit or Short Circuit of Temperature Sensor Diagnosis and Solution)

Description: If the sampling voltage is lower than 0.06V or higher than 4.94V, the LED displays the failure.

Recommended parts to prepare: Connection wires, Sensors, PCB

Troubleshooting and repair:

Refer to Appendix, page 94.

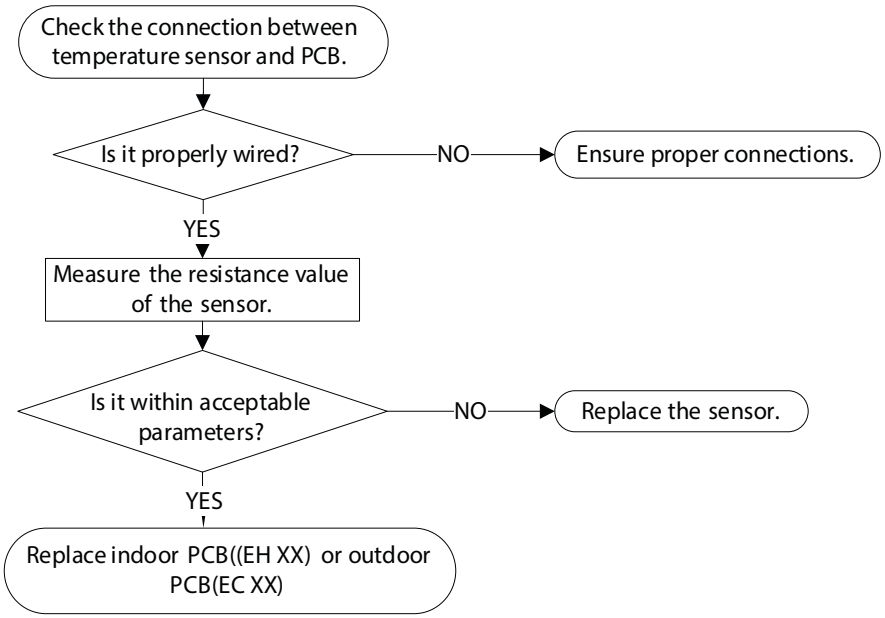

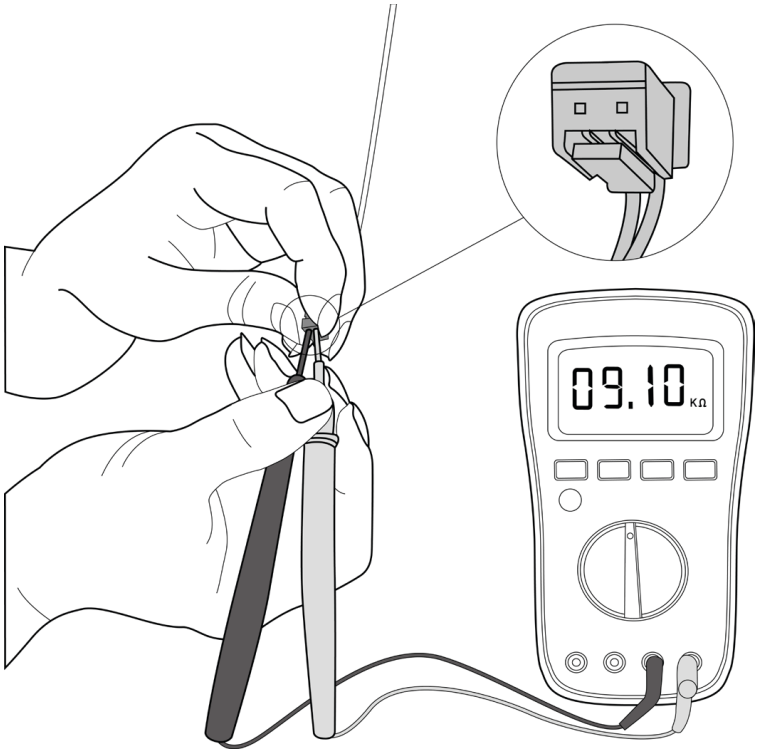

NOTE: This picture and the value are only for reference, actual appearance and value may vary.

EC 55 (ODU IPM module temperature sensor malfunction diagnosis and solution)

Description: If the sampling voltage is 0V or 5V, the LED displays the failure code.

Recommended parts to prepare:

- **IPM module PCB**
- **Connection wires**
- **Sensors**
- **Outdoor main PCB**

Troubleshooting and repair: If the radiator has no sensor, follow the steps below to resolve:

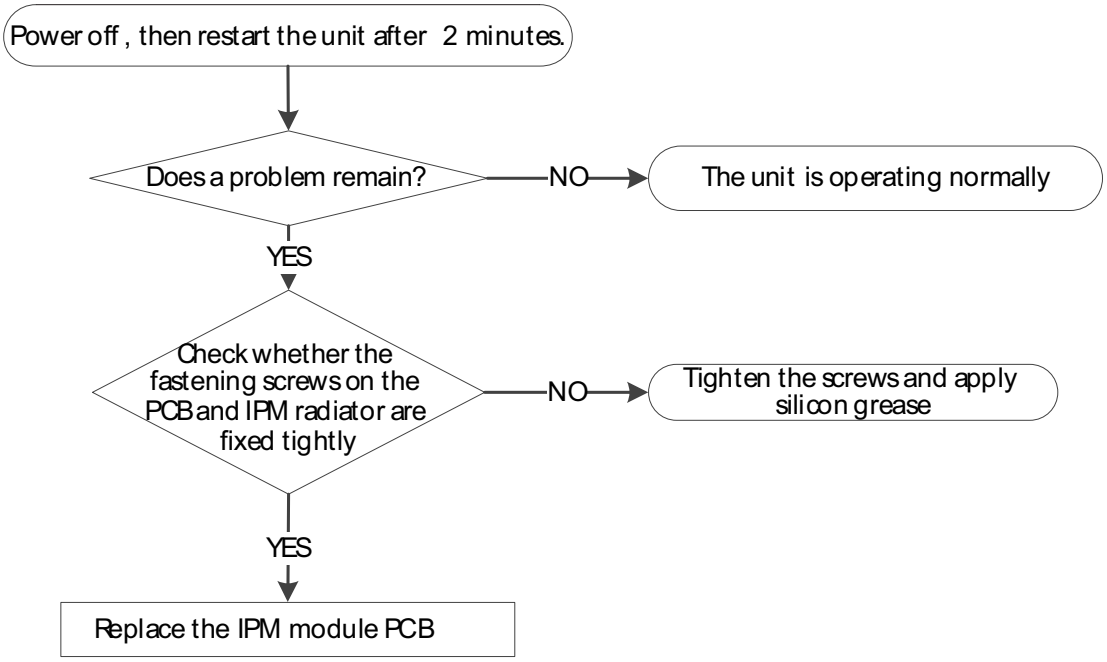

If the radiator has a sensor(TH), follow the steps below:

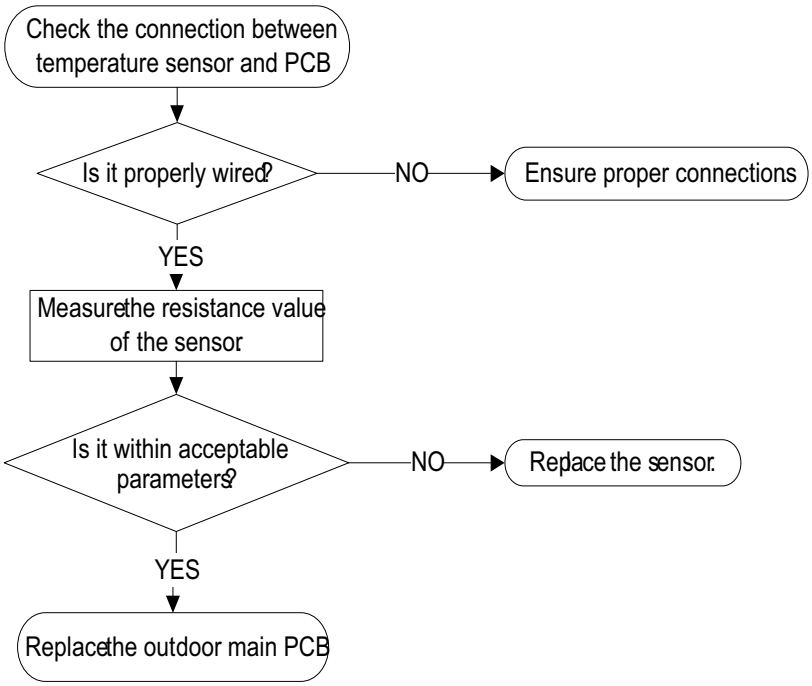

EL 0C (System Lacks Refrigerant Diagnosis and Solution)

Description: Judging the abnormality of the refrigeration system according to the number of compressor stops and the changes in operating parameters caused by excessive exhaust temperature.

Recommended parts to prepare: Indoor PCB, Additional refrigerant

Troubleshooting and repair:

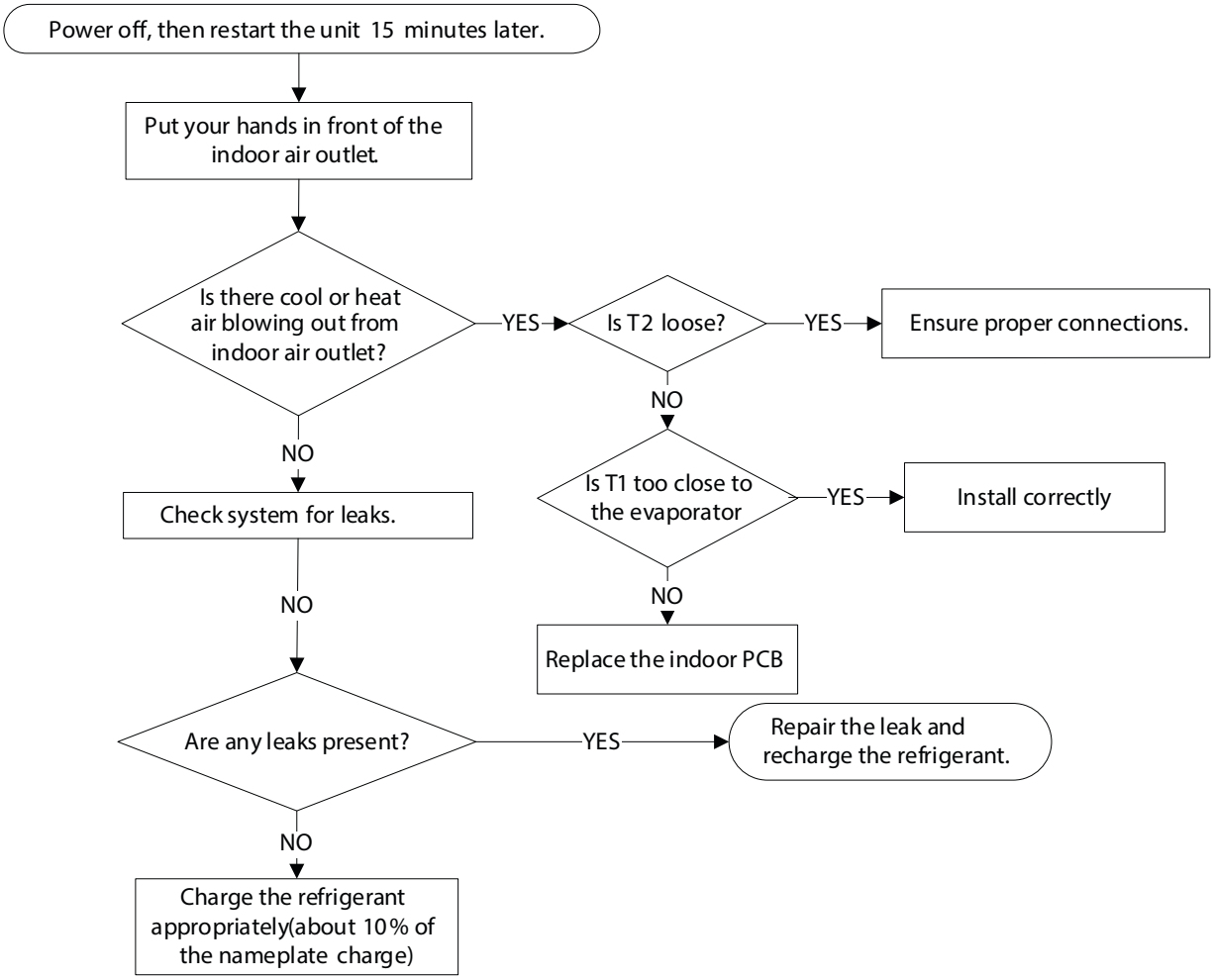

EH 0E (Water-Level Alarm Malfunction Diagnosis and Solution)

Description: If the sampling voltage is not 5V, the LED displays the failure code.

Recommended parts to prepare: Connection wires, Water-level switch, Water pump, Indoor PCB

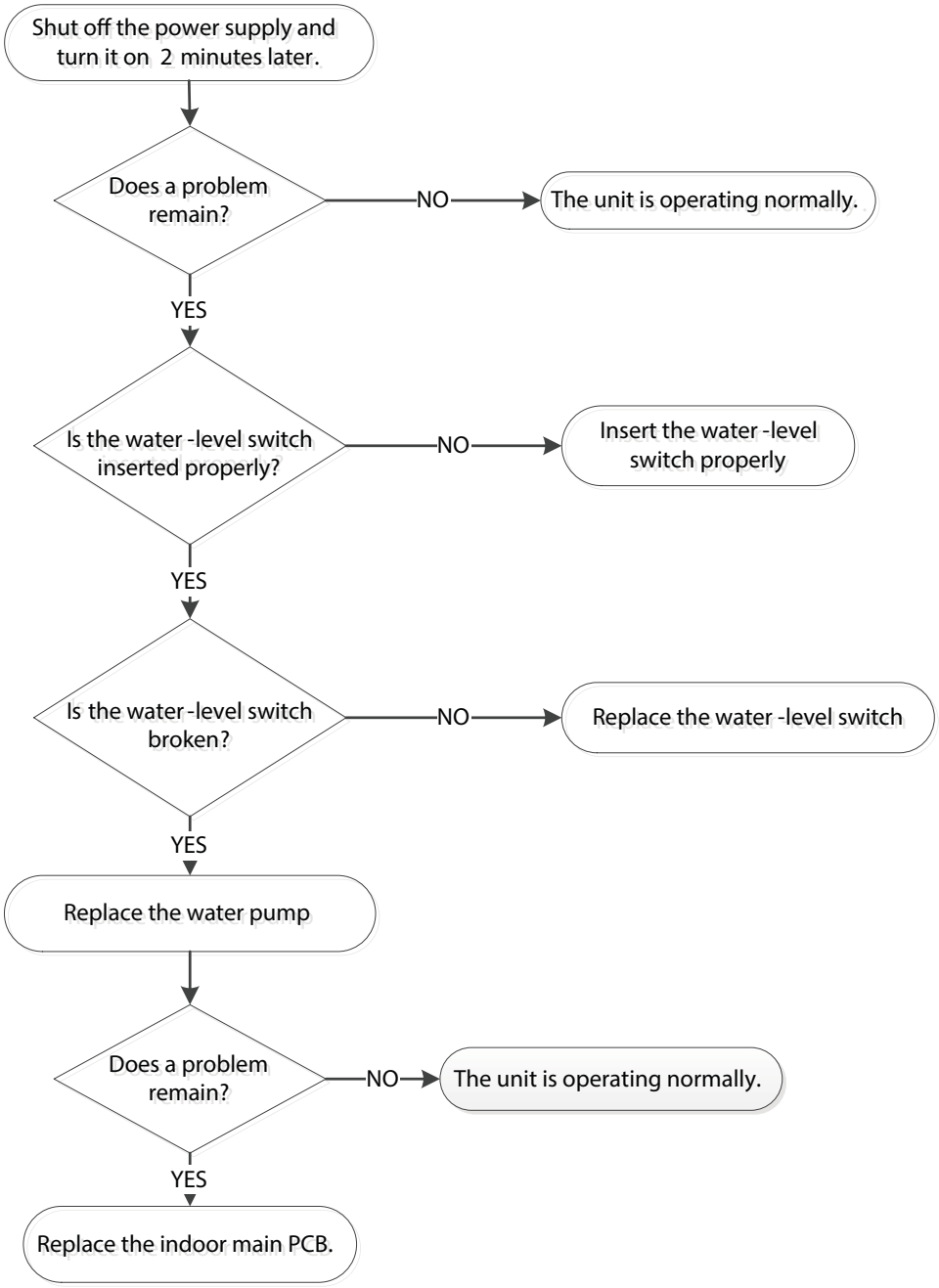

PC 00 (ODU IPM Module Protection Diagnosis and Solution)

Description: When the voltage signal the IPM sends to the compressor drive chip is abnormal, the display LED shows "PC 00" and the AC turn off.

Recommended parts to prepare: Connection wires, IPM module board, Outdoor fan assembly, Compressor, Outdoor PCB

Troubleshooting and repair:

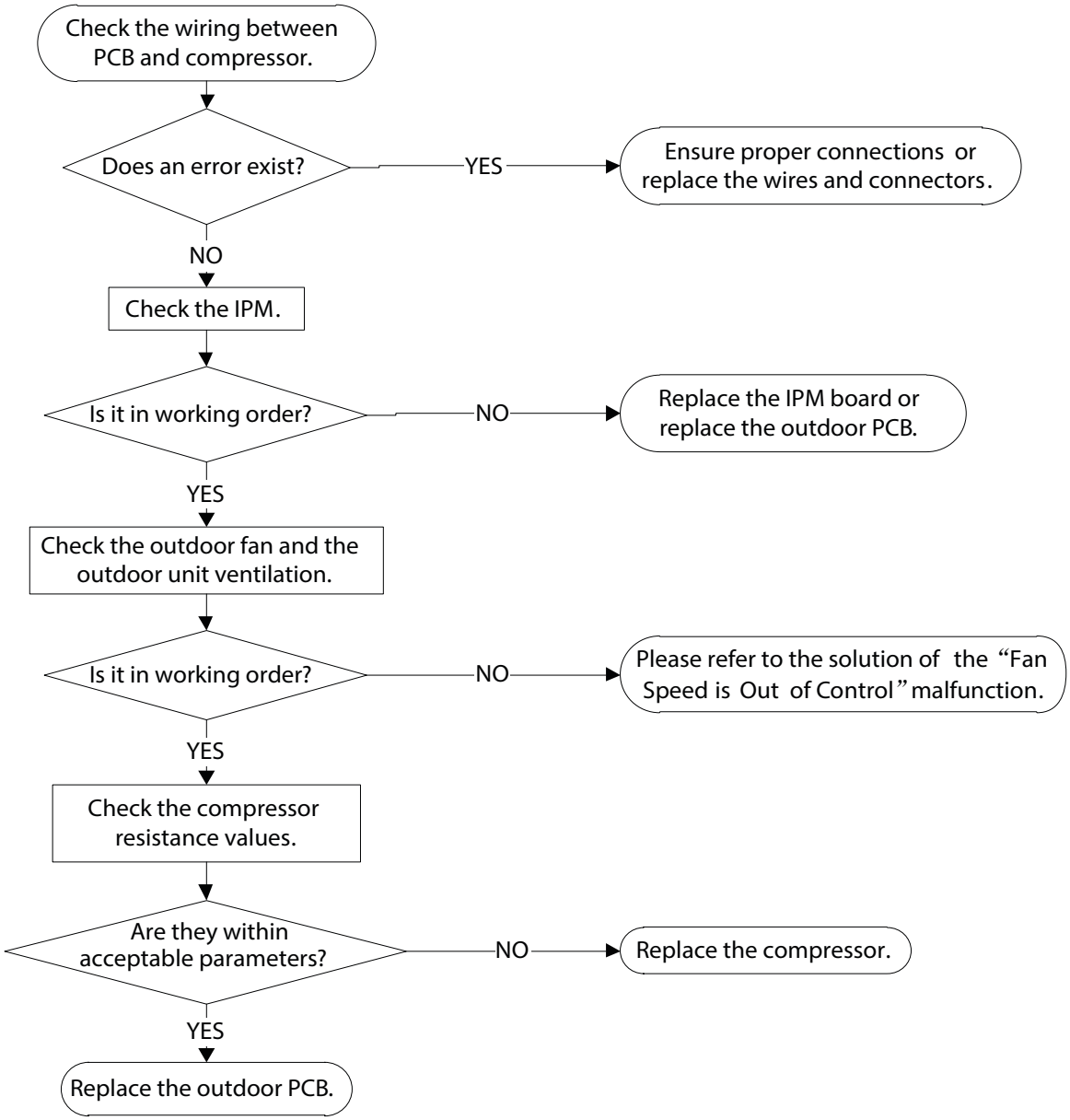

NOTE: For certain models, the outdoor PCB can not be removed separately. In this case, the outdoor electric control box should be replaced as a whole.

PC 01 (ODU Voltage Protection Diagnosis and Solution)

PC 01 (Over voltage or too low voltage protection) / PC 10 (Outdoor unit low AC voltage protection) / PC 11 (Outdoor unit main control board DC bus high voltage protection) / PC 12 (Outdoor unit main control board DC bus high voltage protection/341 MCE error) Diagnosis and Solution)

Description: Abnormal increases or decreases in voltage are detected by checking the specified voltage detection circuit.

Recommended parts to prepare: Power supply wires, IPM module board, PCB, Reactor

Troubleshooting and repair:

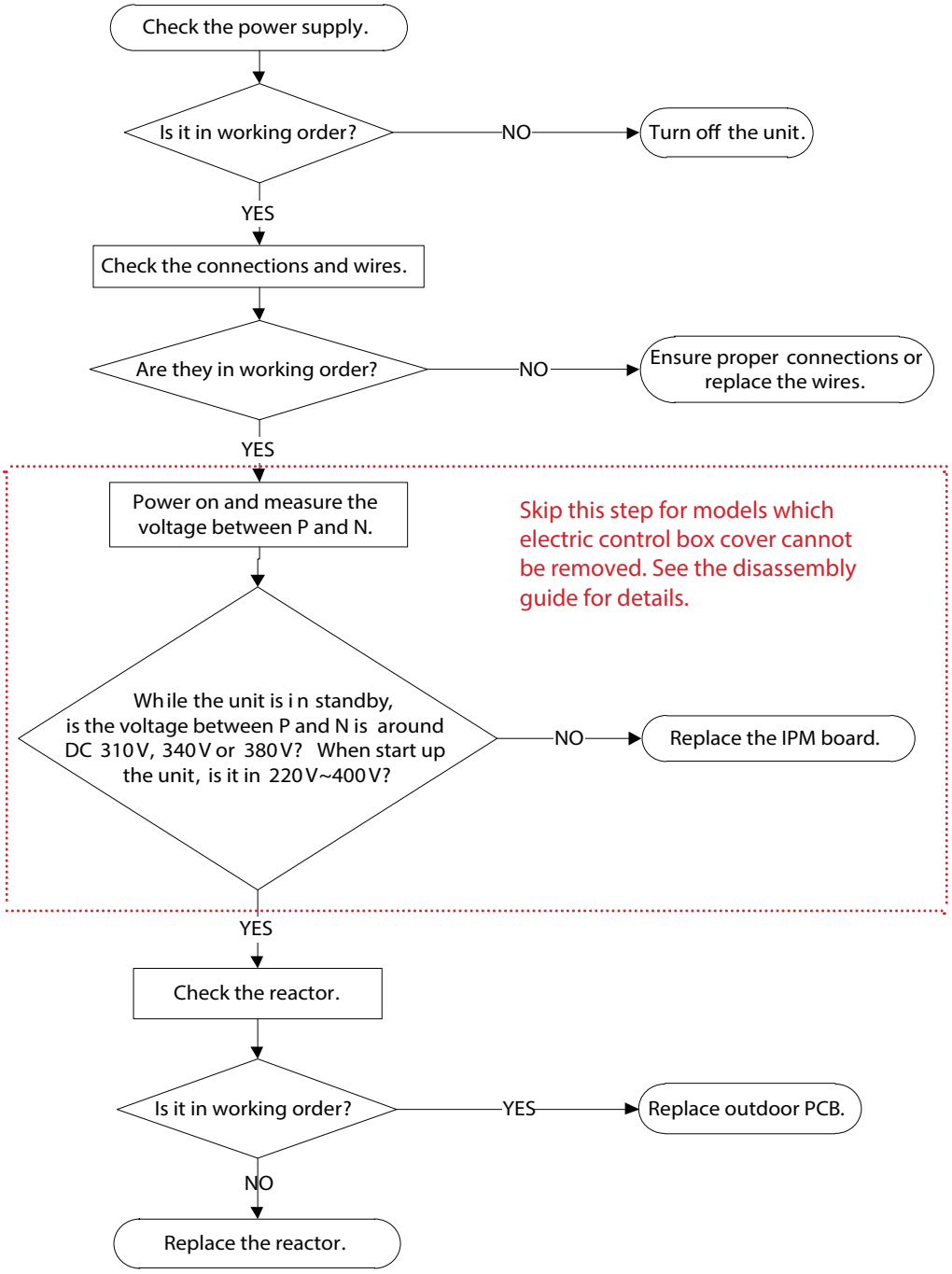

NOTE: For certain models, the outdoor PCB cannot be removed separately. In this case, the outdoor electric control box should be replaced as a whole.

PC 13(The AC power is cut off or the AC voltage detection circuit fails diagnosis and solution)

Description: The machine equipped with a safety shut-off valve has detected a power outage from the mains.

Recommended parts to prepare:

• Outdoor PCB

Troubleshooting and repair:

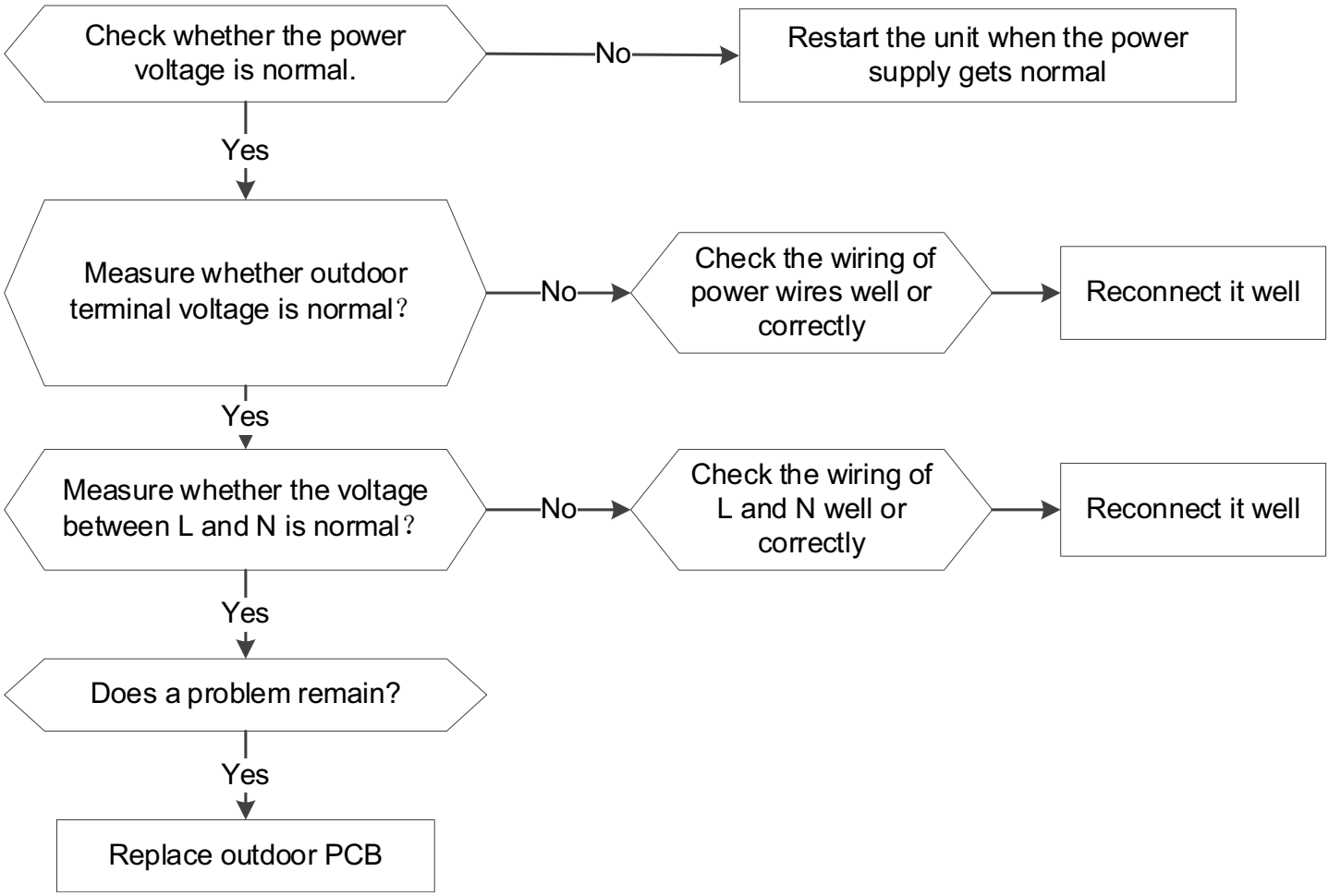

PC A1 (Condensation protection of refrigerant pipe diagnosis and solution)

Description: If outdoor ambient temperature is higher than a certain set value of the refrigerant pipe temperature for a period of time, the LED displays the failure code.

Recommended parts to prepare:

- **T4 sensor**
- **T5 sensor**
- **Main EXV**
- **Outdoor PCB**

Troubleshooting and repair:

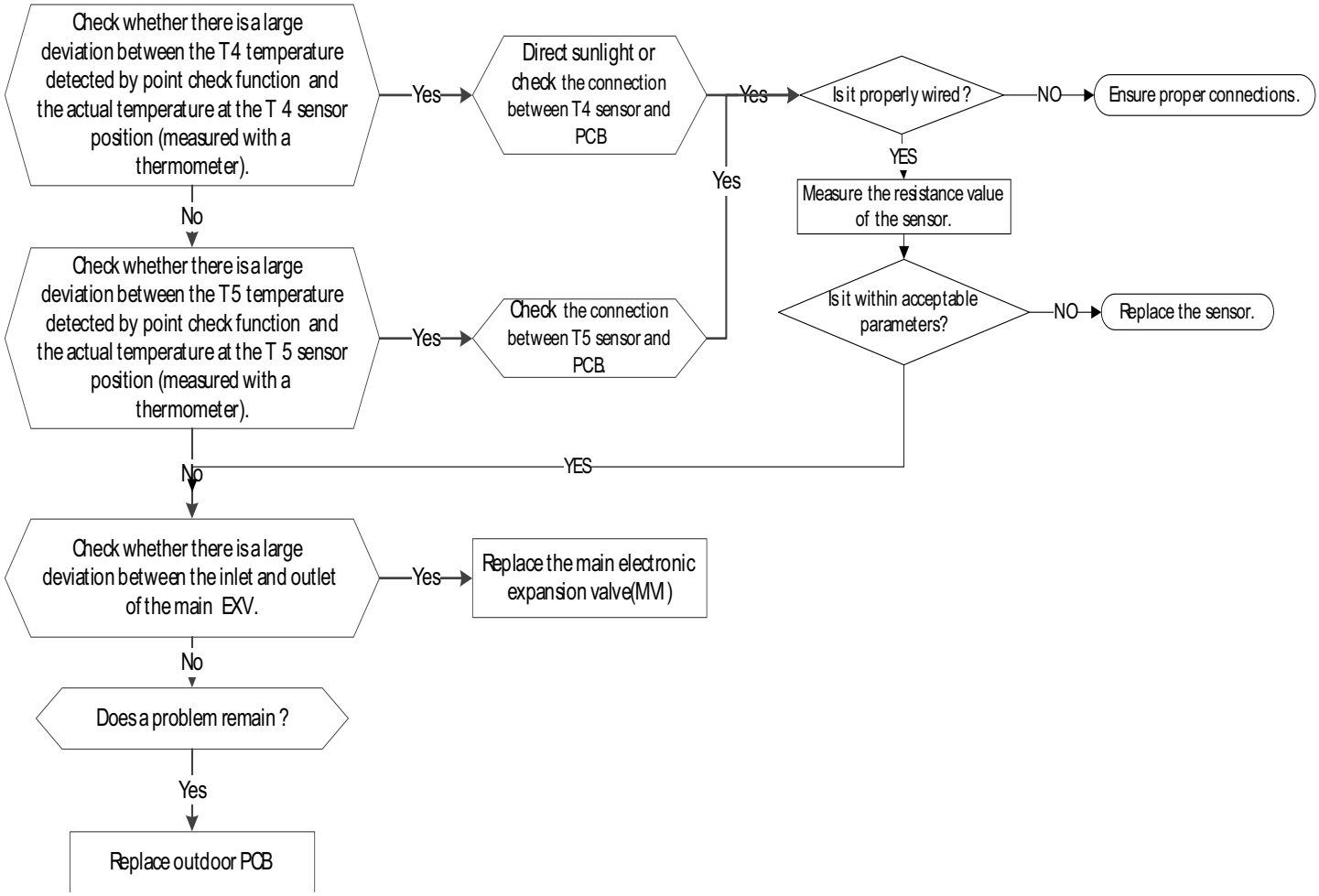

PC 02 / LC 06 Compressor Top (or IPM) Temp. Protection Diagnosis and Solution

Description: **For some models with overload protection, If the sampling voltage is not 5V, the LED will display the failure. If the temperature of IPM module is higher than a certain value, the LED displays the failure code.**

Recommended parts to prepare: Connection wires, Outdoor PCB, IPM module board, High pressure protector, System blockages

Troubleshooting and repair:

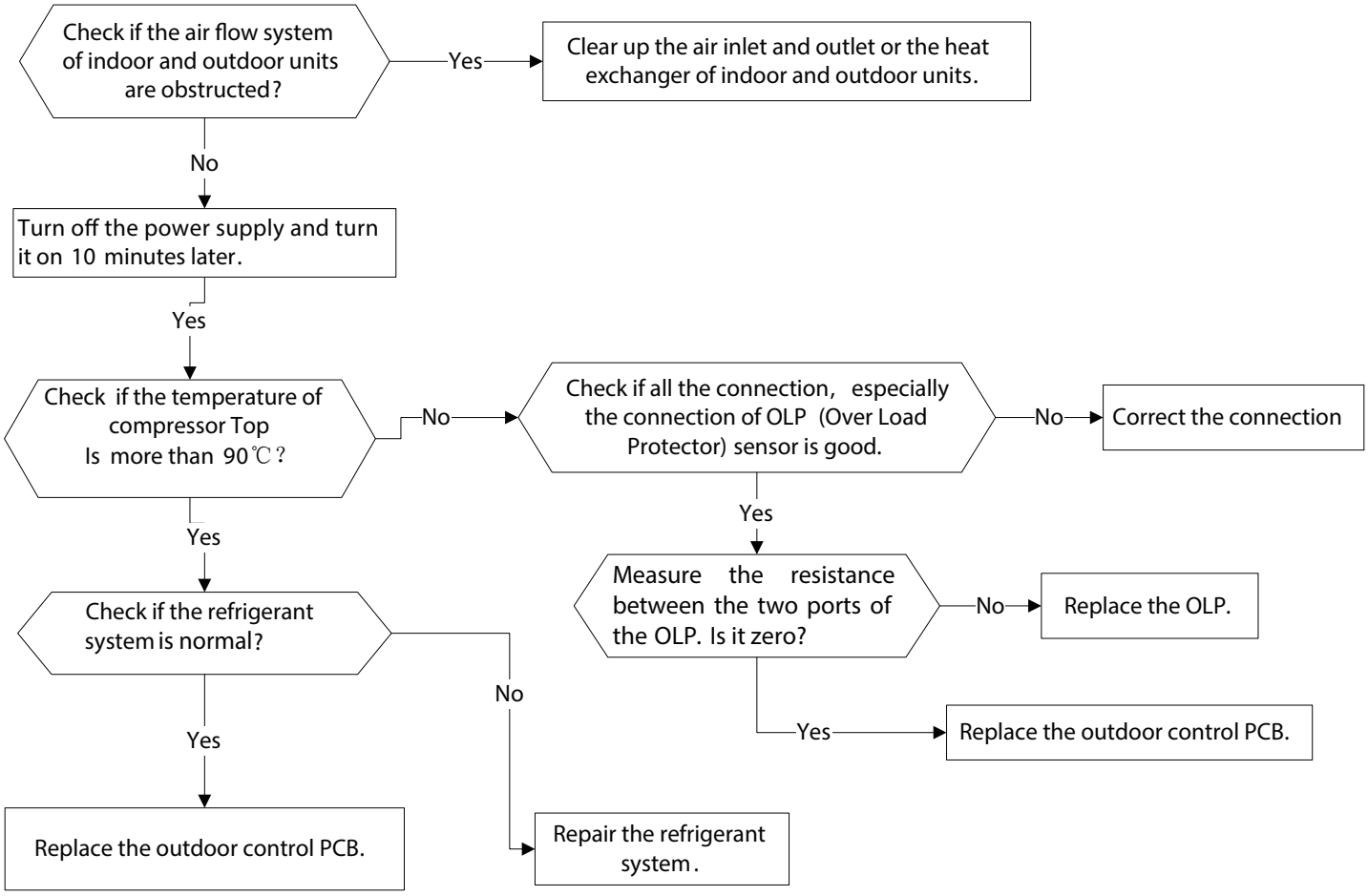

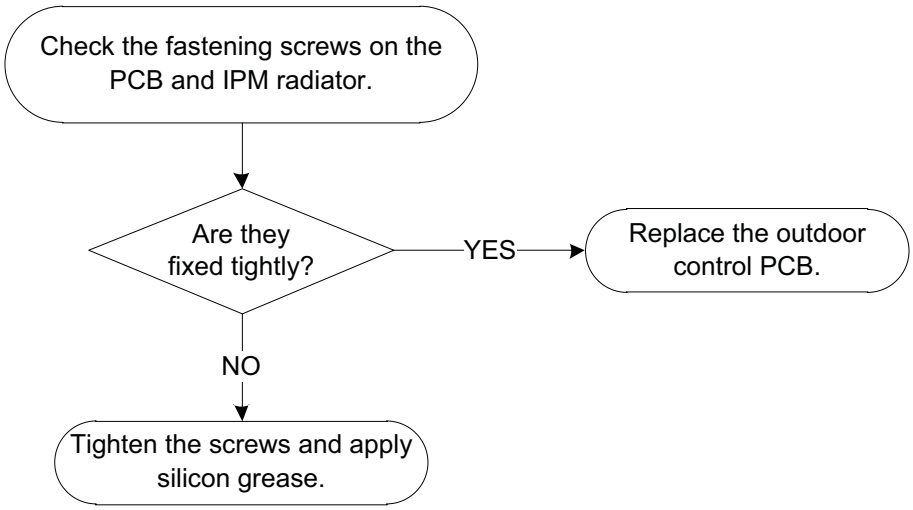

PC 03 Pressure Protection (low or high pressure), PC 30 High Pressure Protection, PC 31 Low Pressure Protection (Diagnosis and Solution)

Description: Outdoor pressure switch cut off the system because high pressure is higher than 4.4 MPa or outdoor pressure switch cut off the system because low pressure is lower than 0.13 MPa, the LED displays the failure code.

Recommended parts to prepare: Connection wires, Pressure switch, Outdoor fan, Outdoor main PCB, Refrigerant

Troubleshooting and repair:

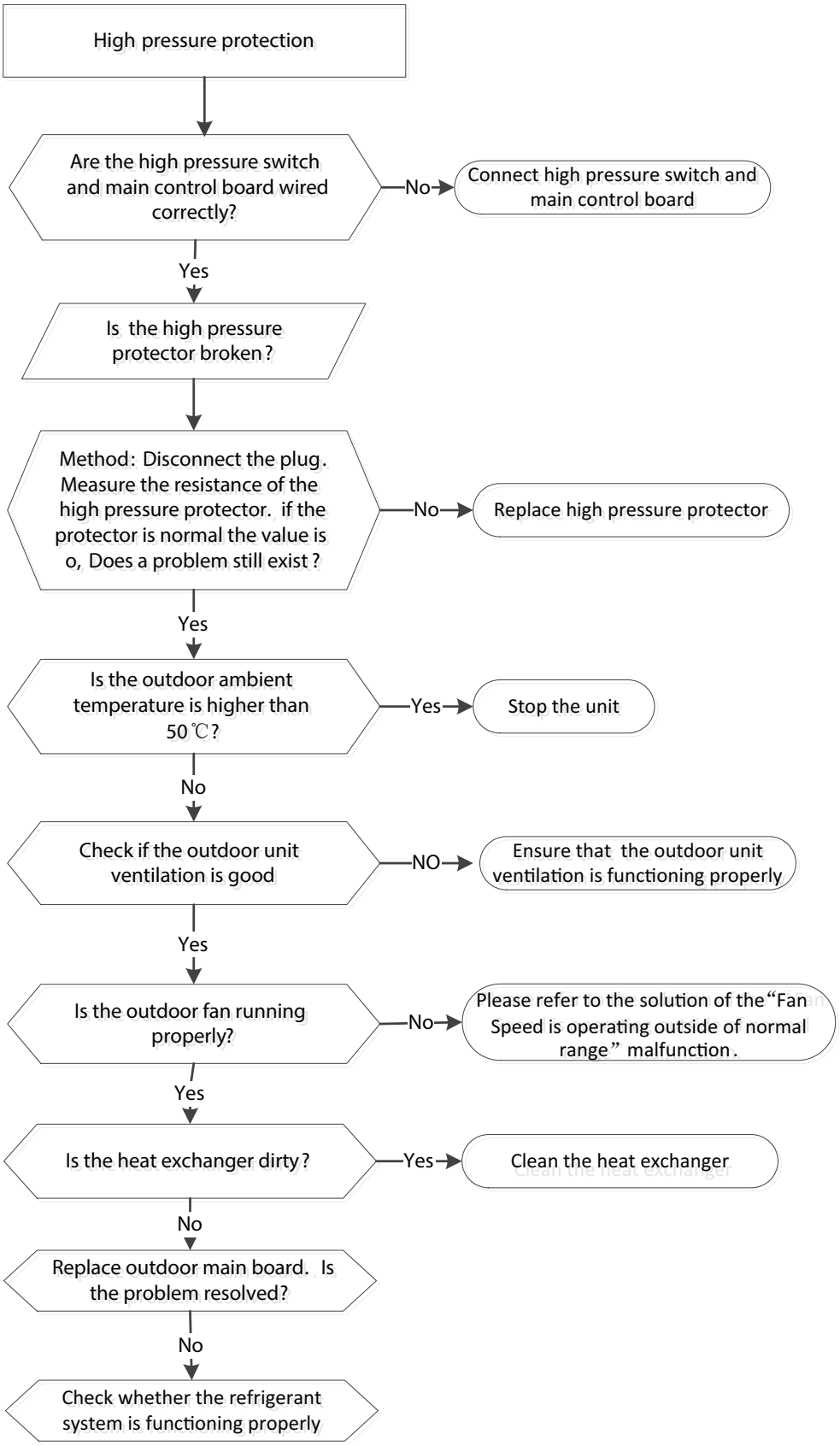

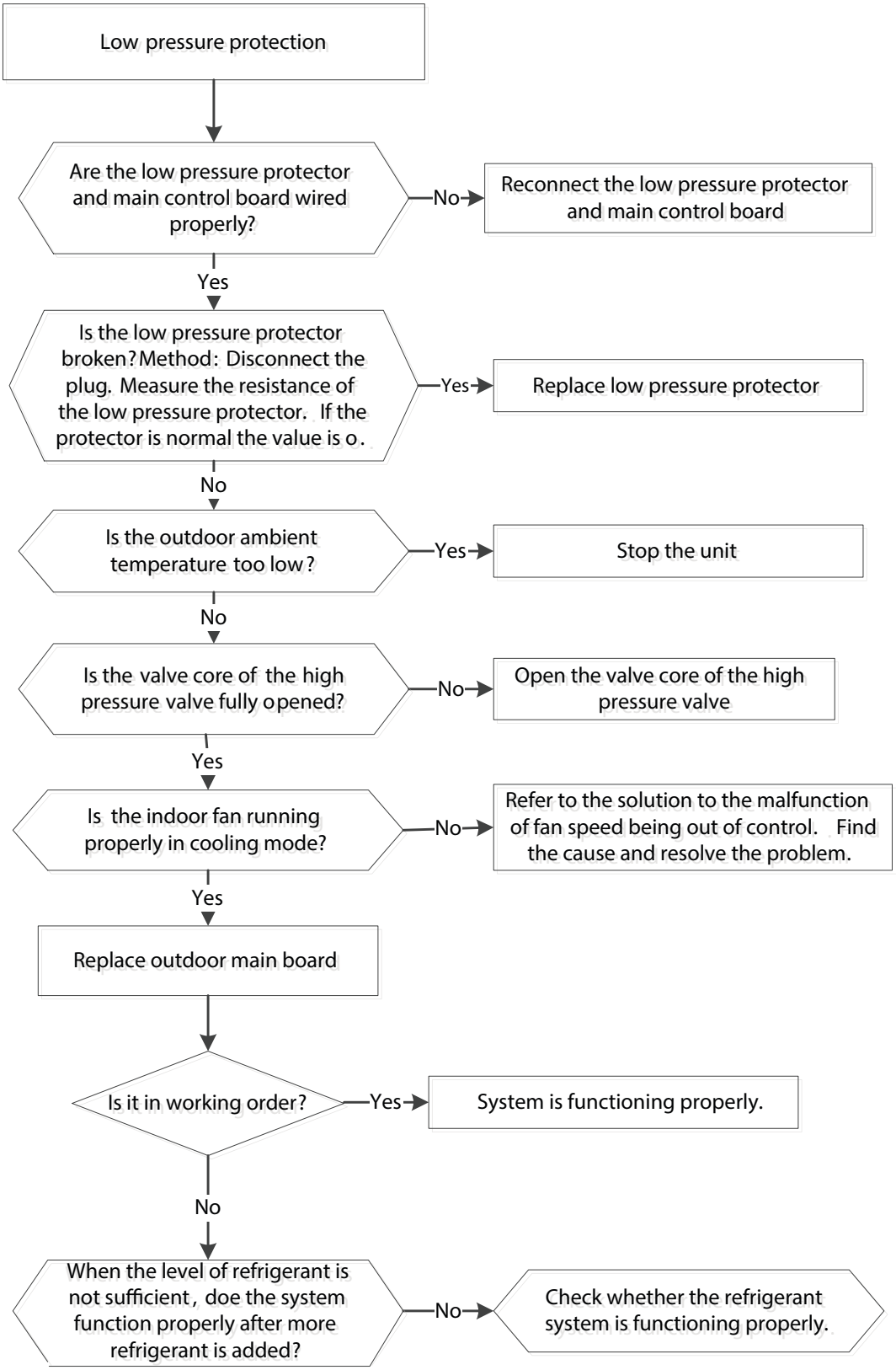
Low pressure protection
Are the low pressure protector and main control board wired properly?
No
Reconnect the low pressure protector and main control board
Yes
Is the low pressure protector broken? Method: Disconnect the plug. Measure the resistance of the low pressure protector. If the protector is normal the value is o.
Yes
Replace low pressure protector
No
Is the outdoor ambient temperature too low?
Yes
Stop the unit
No
Is the valve core of the high pressure valve fully opened?
No
Open the valve core of the high pressure valve
Yes
Is the indoor fan running properly in cooling mode?
No
Refer to the solution to the malfunction of fan speed being out of control. Find the cause and resolve the problem.
Yes
Replace outdoor main board
Is it in working order?
Yes
System is functioning properly.
No
When the level of refrigerant is not sufficient, doe the system function properly after more refrigerant is added?
No
Check whether the refrigerant system is functioning properly.

PC 04 (Inverter Compressor Drive Error Diagnosis and Solution)

Description: An abnormal inverter compressor drive is detected by a special detection circuit, including communication signal detection, voltage detection, compressor rotation speed signal detection and so on.

Recommended parts to prepare: Connection wires, IPM module board, Outdoor fan assembly, Compressor, Outdoor PCB

Troubleshooting and repair:

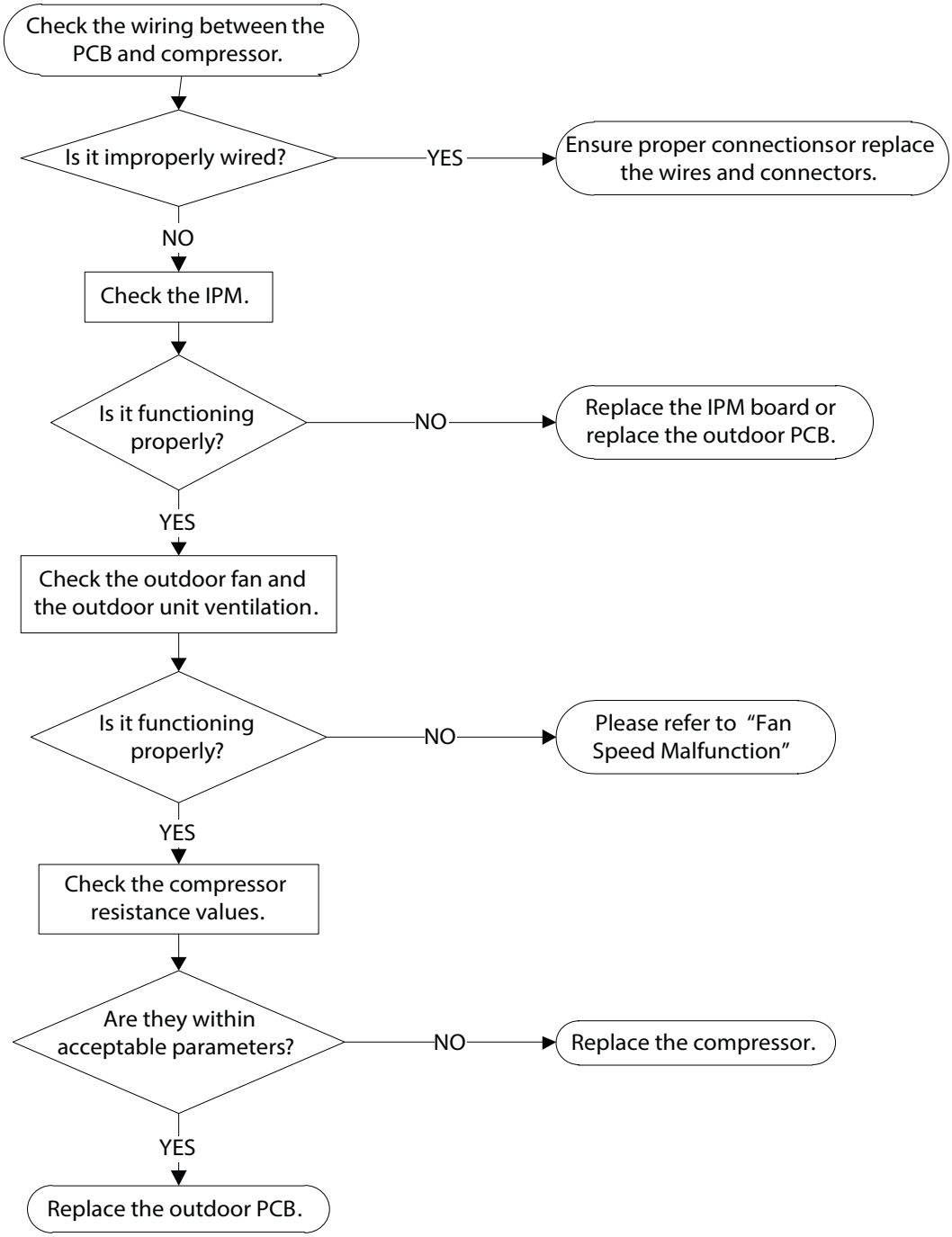

PC 40 (Communication error between ODU main chip and compressor driven chip diagnosis and solution)

Description: The main PCB cannot detect the IPM board.

Recommended parts to prepare: Connection wires, Outdoor PCB, IPM module board, Electric control box

Troubleshooting and repair:

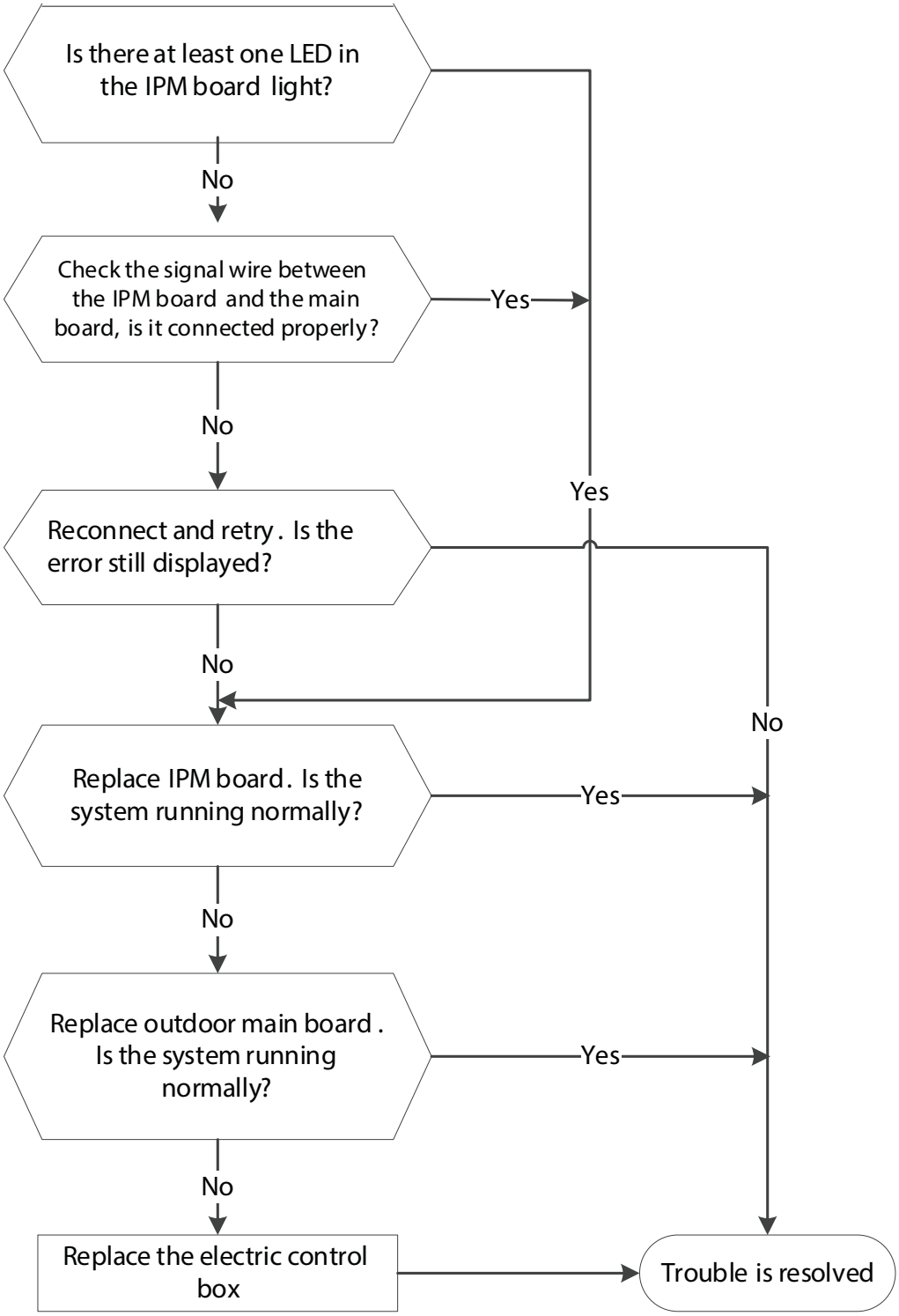

PC 41 (Outdoor compressor current sampling circuit failure diagnosis and solution)

Description: Three-phase sampling offset voltage error, the static bias voltage is normally 2.5V.

Recommended parts to prepare: Outdoor main PCB

Troubleshooting and repair:

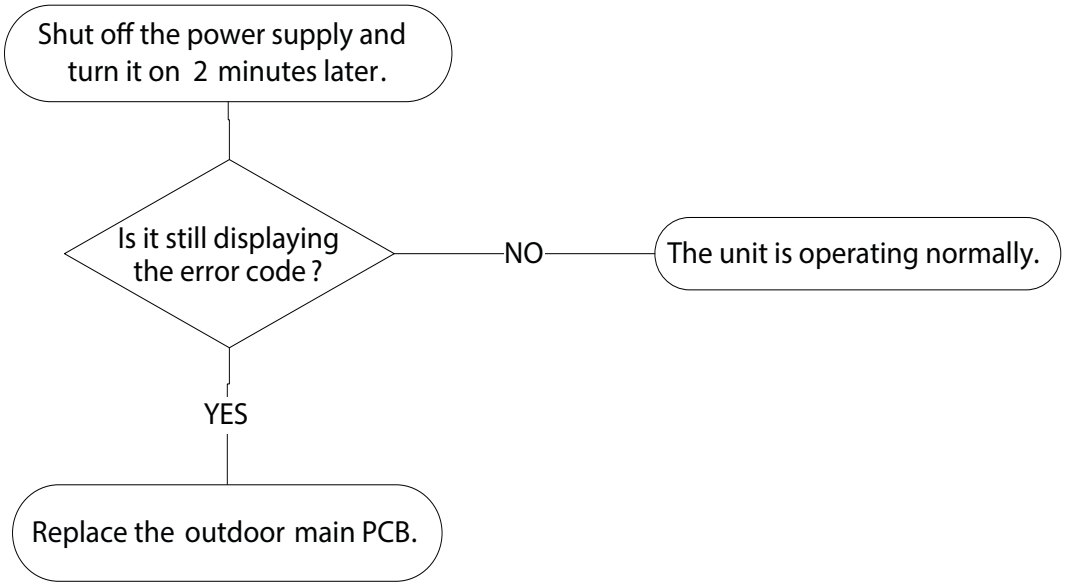

PC 43 (ODU compressor lack phase protection diagnosis and solution)

Description: When the three-phase sampling current of the compressor is abnormal, especially when the current of one or more phases is always small and almost 0, the LED displays the failure code.

Recommended parts to prepare: Connection wire, Compressor, Outdoor PCB

Troubleshooting and repair:

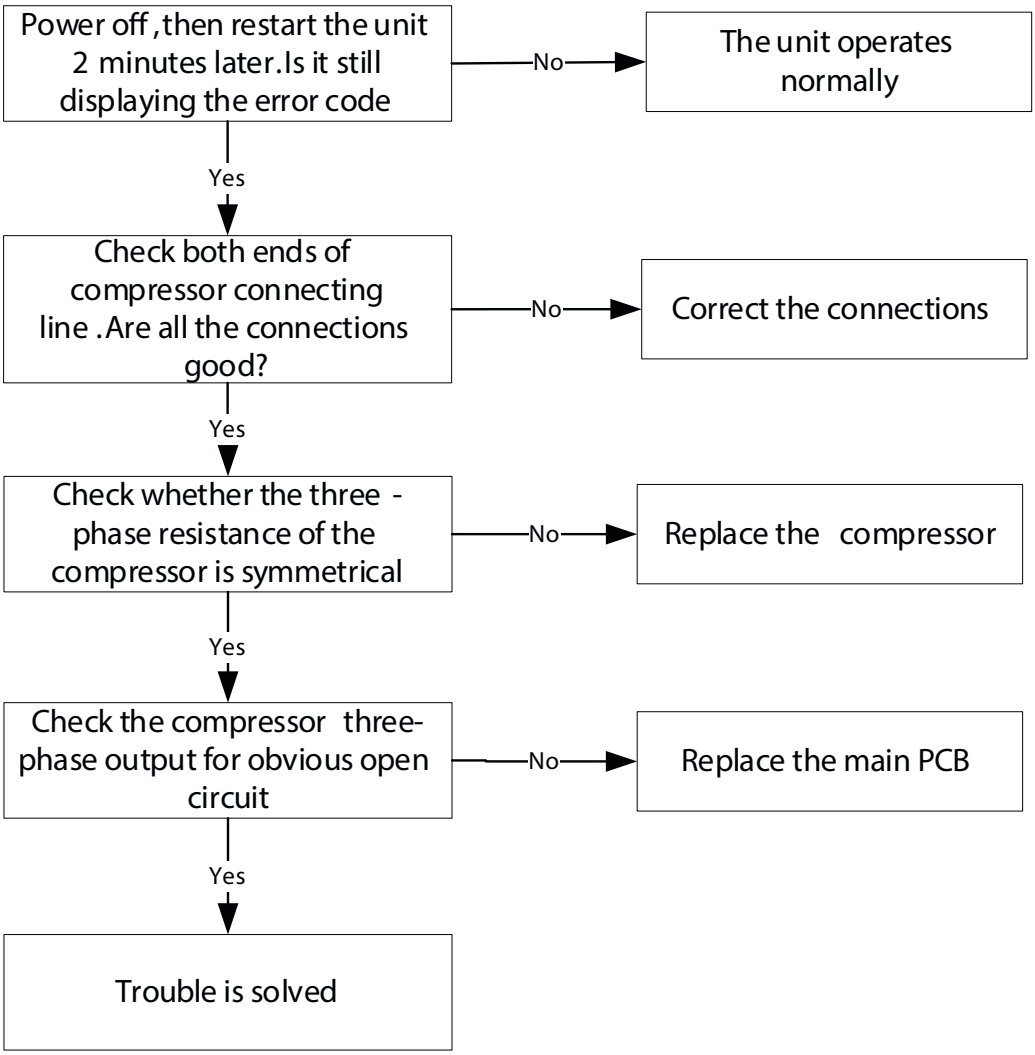

PC 45 (ODU IR chip drive failure diagnosis and solution)

Description: When the IR chip detects its own parameter error, the LED displays the failure code when power on.

Recommended parts to prepare: Inverter module PCB.

Troubleshooting and repair:

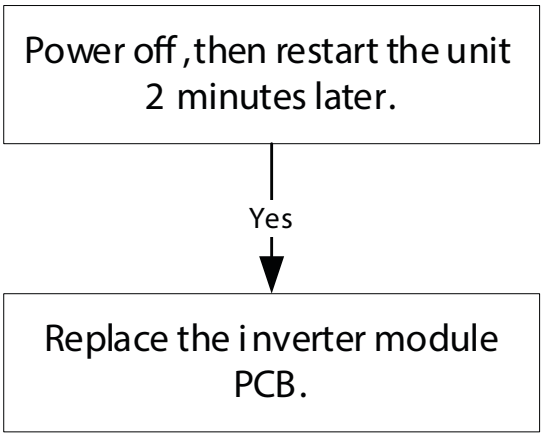

PC 06 (Discharge temperature protection of compressor diagnosis and solution)

Description: When the compressor discharge temperature (TP) is more than 115°C for 10 seconds, the compressor ceases operation and does not restart until TP is less than 90°C

Recommended parts to prepare: Connection wires, Outdoor PCB, Discharge temperature sensor, Refrigerant

Troubleshooting and repair:

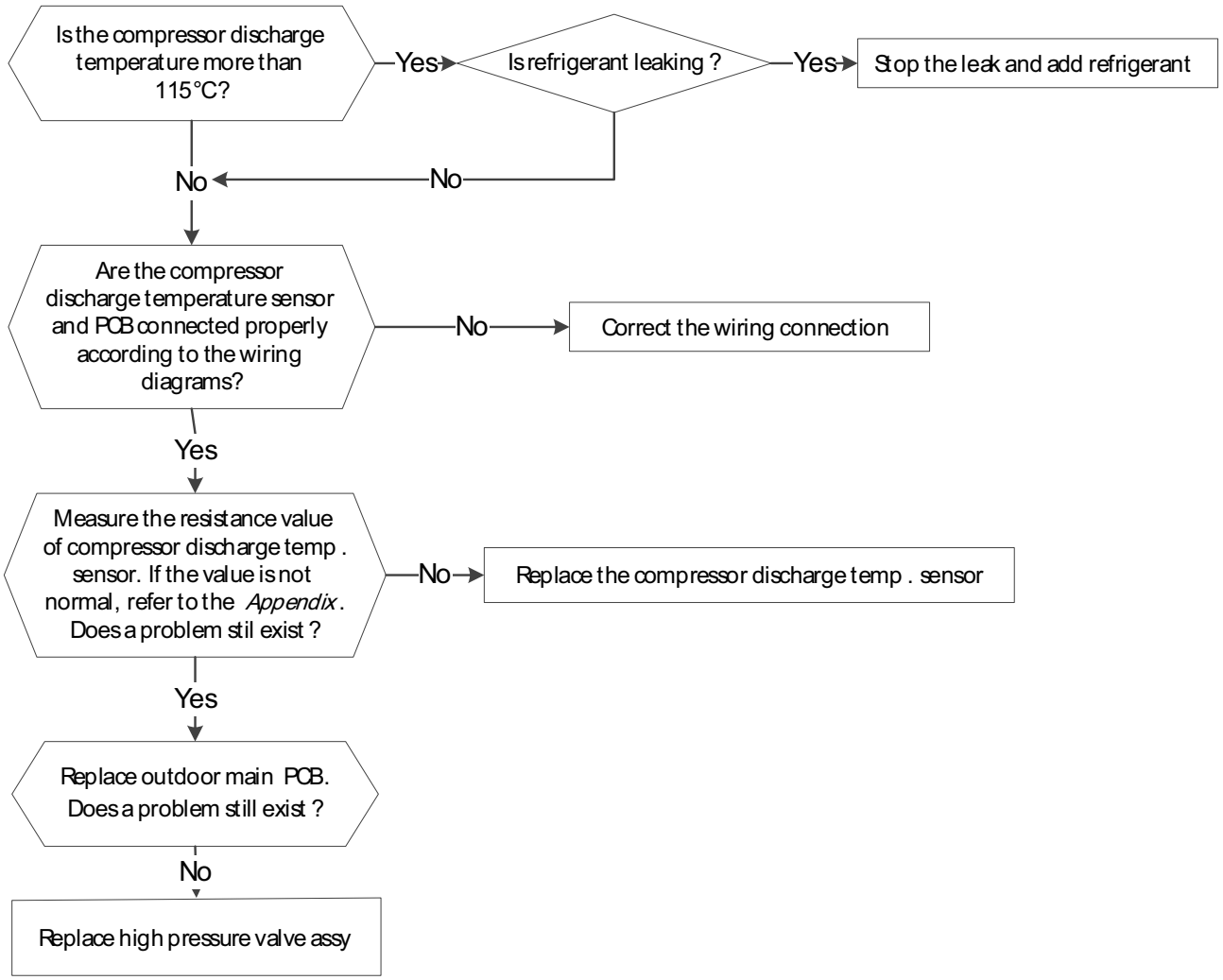

PC 08 (Current overload protection)/ PC 42 (Compressor start failure of outdoor unit)/ PC 44 (ODU zero speed protection) / PC 46 (Compressor speed has been out of control)/ PC 49 (Compressor overcurrent failure)

Description: An abnormal current rise is detected by checking the specified current detection circuit.

Recommended parts to prepare: Outdoor PCB, Connection wires, Bridge rectifier, PFC circuit or reactor, Refrigeration piping system, Pressure switch, Outdoor fan, PM module board

Troubleshooting and repair:

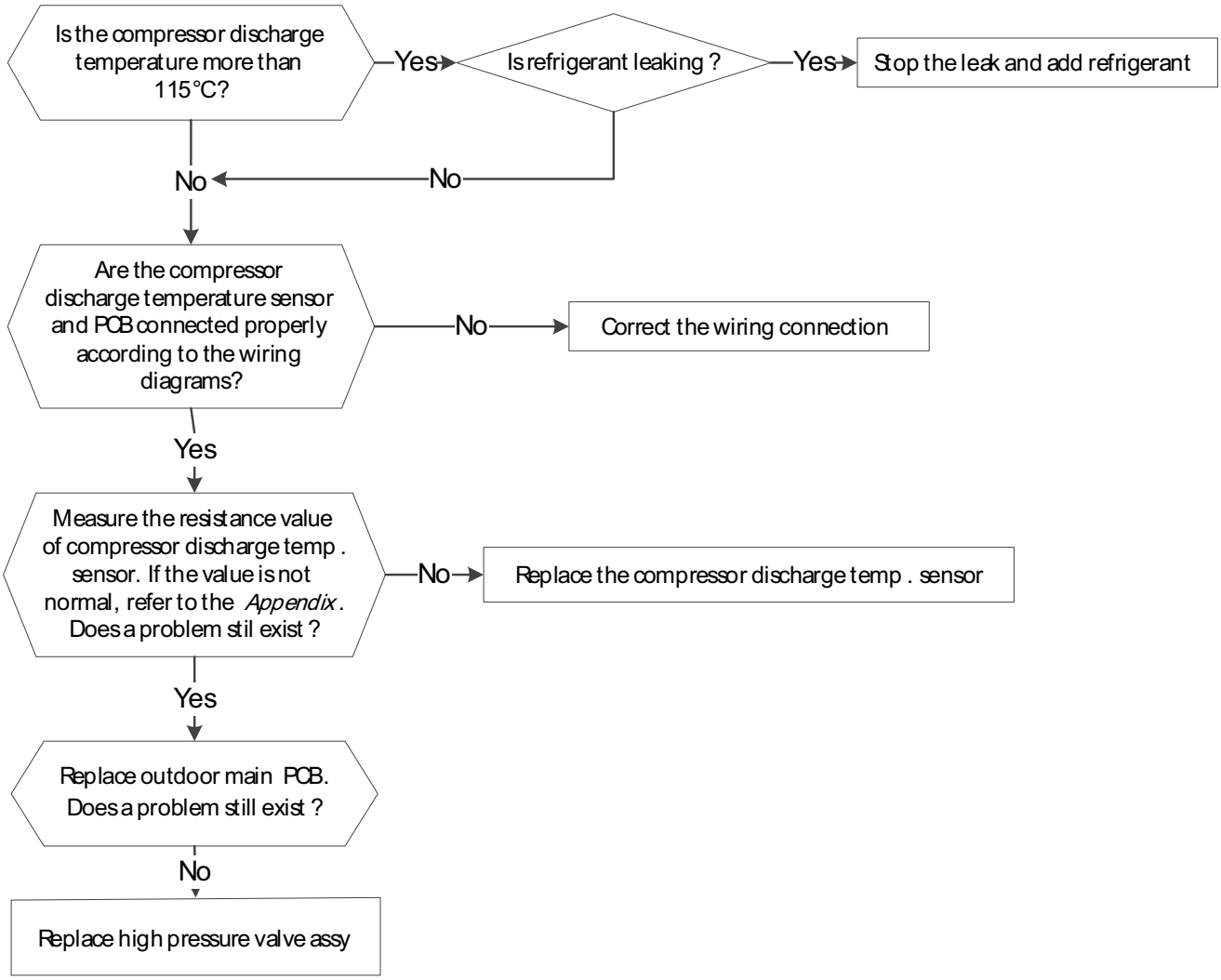

PC 0A (High temperature protection of condenser diagnosis and solution)

Description: The unit will stop when condenser temperature is higher than 65°C, and runs again when it is less than 52°C

Recommended parts to prepare: Connection wires, Condenser temperature sensor, Outdoor fan, Outdoor main PCB, Refrigerant

Troubleshooting and repair:

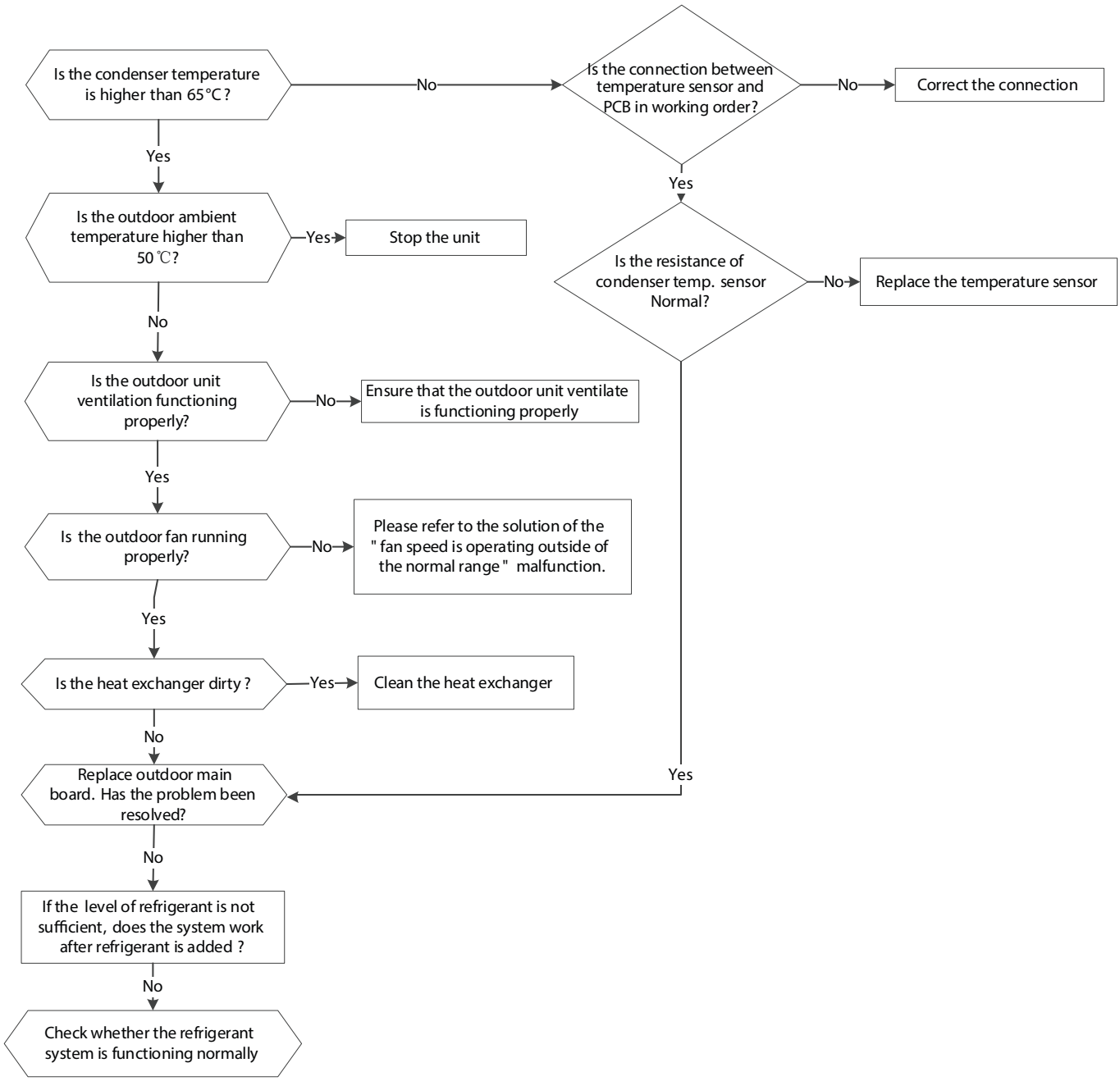

PC 0F (PFC module protection diagnosis and solution)

Description: Outdoor PCB detects PFC signal is low voltage or DC voltage is lower than 340V for 6s when quick check.

Recommended parts to prepare: Connection wires Outdoor PCB, Inductance, PFC circuit or IPM module board

Troubleshooting and repair:

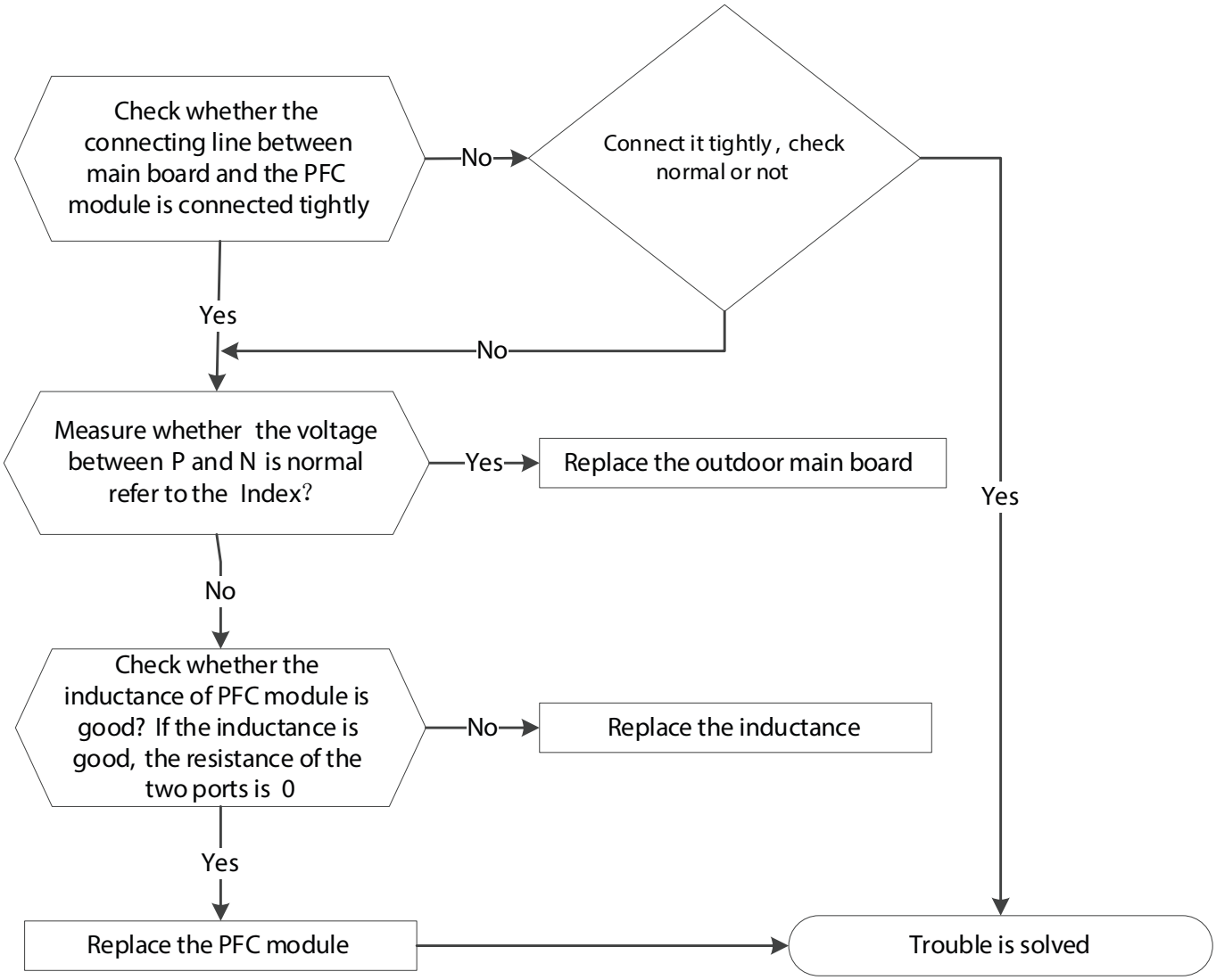

PC 10 (ODU low AC voltage protection)/ PC 11 (ODU main control board DC bus high voltage protection)/ PC 12 (ODU main control board DC bus high voltage protection /341 MCE error) Diagnosis and Solution

Description: Abnormal increases or decreases in voltage are detected by checking the specified voltage detection circuit.

Recommended parts to prepare: Power supply wires, IPM module board, Outdoor PCB, Bridge rectifier, PFC circuit or reactor

Troubleshooting and repair:

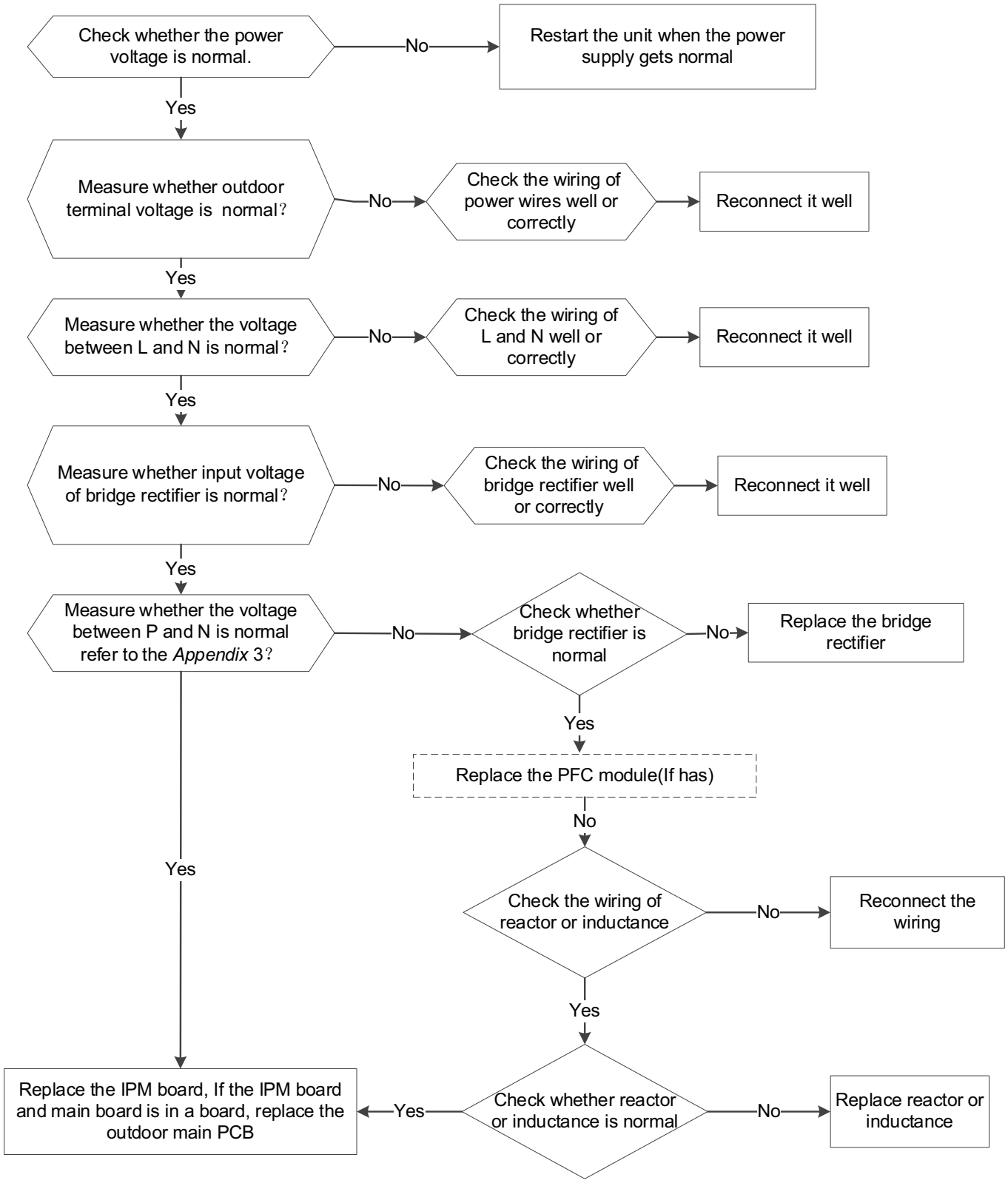

PC 0L (Low Ambient Temperature Protection)

Description: It is a protection function. When compressor is off, outdoor ambient temperature(T4) is lower than -35oC. for 10s, the AC will stop and display the failure code.

When compressor is on, outdoor ambient temperature(T4) is lower than -40oC.for 10s, the AC will stop and display the failure code.

When outdoor ambient temperature(T4) is no lower than -32oC.for 10s, the unit will exit protection

EH b3 (Communication Malfunction Between Wire and Master Control) Diagnosis and Solution

Description: If Indoor PCB does not receive feedback from wired controller, the error displays on the wired controller

Recommended parts to prepare: Connection wires, Indoor PCB, Wired controller

Troubleshooting and repair:

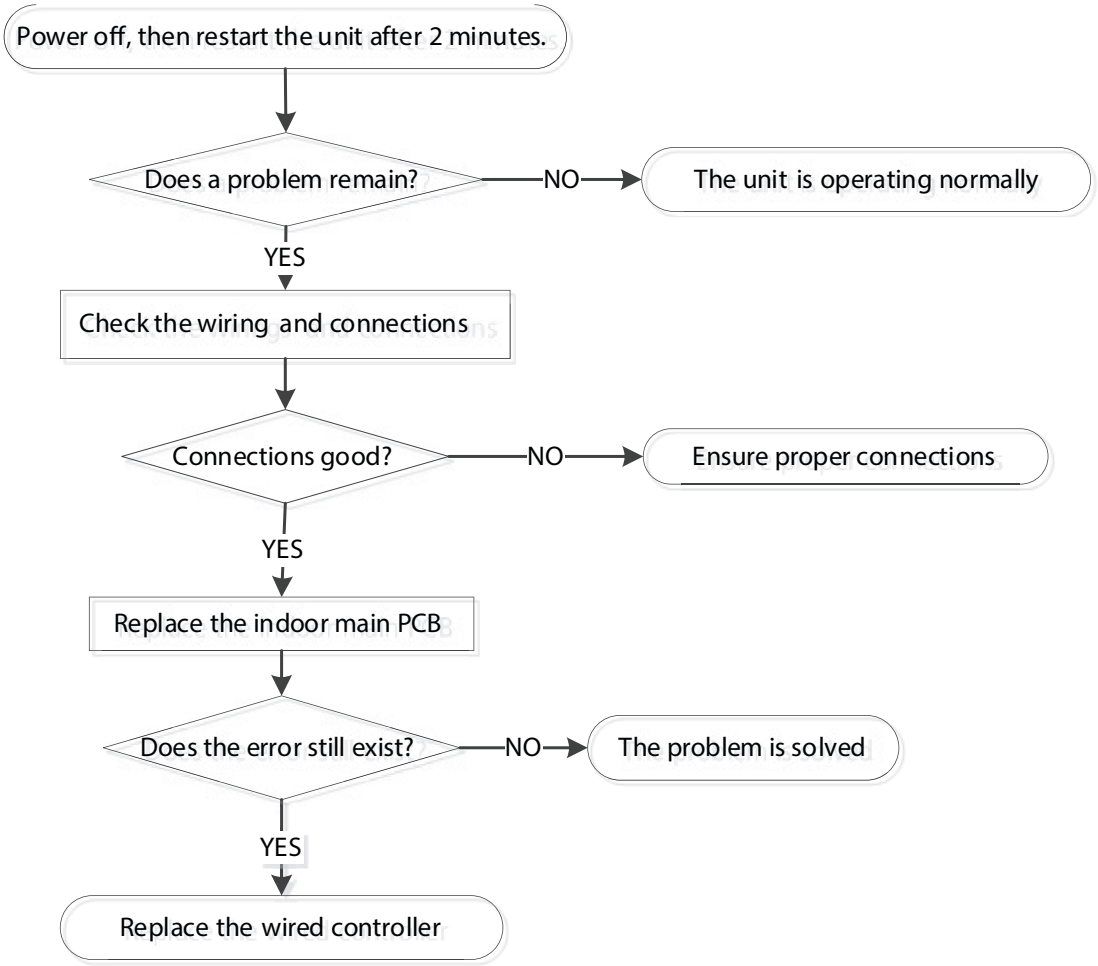

EH bA (Communication Malfunction Between Indoor Unit and External Fan Module)/ EH 3A(External Fan DC Bus Voltage Is Too Low Protection)/ EH 3b (External Fan DC Bus Voltage is Too High) Fault) Diagnosis and Solution

Description: Indoor unit does not receive the feedback from external fan module during 150 seconds. or Indoor unit receives abnormal increases or decreases in voltage from external fan module.

Recommended parts to prepare: Indoor main PCB

Troubleshooting and repair:

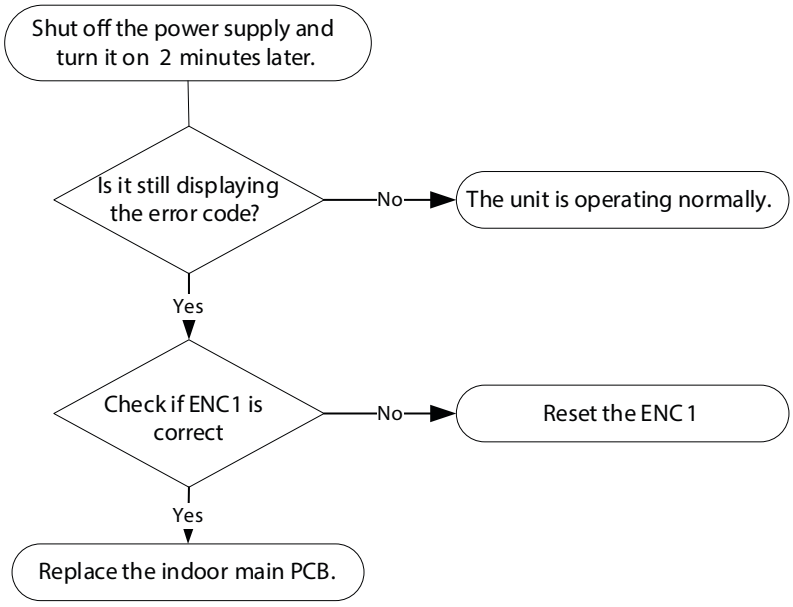

FH CC (Refrigerant Sensor Error) or EH C3(Refrigerant Sensor is Out of Range) Diagnosis and Solution

Description: Indoor unit receives fault signal for 10s or indoor unit does not receive feedback from refrigerant sensor for 150s.

Recommended parts to prepare: Connection wires, Sensors, Indoor main PCB

Troubleshooting and repair:

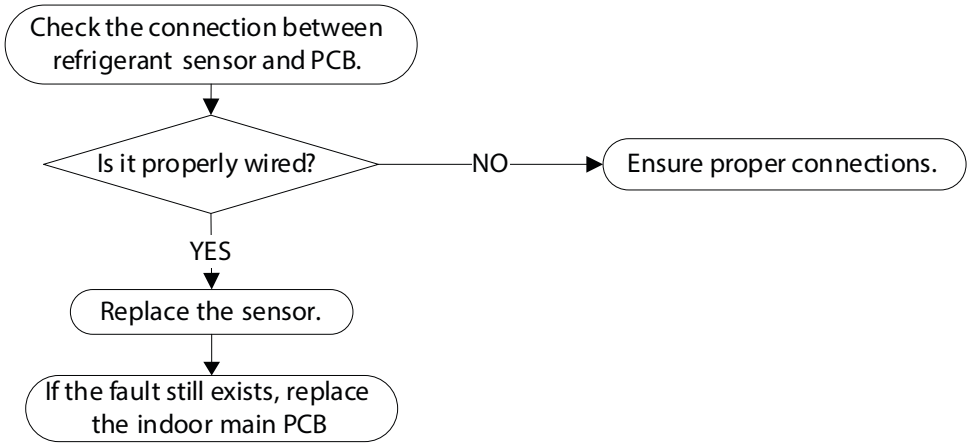

EH C1 (Refrigerant Sensor Detects Leakage) or EH C2 (Refrigerant Sensor is Out of Range and Leakage is Detected) Diagnosis and Solution

Description: The refrigerant sensor detects a concentration higher than or equal to 10%*LFL for 10 seconds or the refrigerant sensor detects a concentration higher than or equal to 20%*LFL or the multi model receives the refrigerant leakage protection fault sent by the outdoor unit.

Multi-zone: Only the buzzer of the indoor unit that detects refrigerant leakage continues to sound the alarm, the shortest sound is 10 seconds, and the longest sound is 5 minutes (you can press any key such as remote control or wire control, APP and so on to eliminate the alarm), and the other non-refrigerant leakage fault indoor unit only displays "ECC1", but the buzzer does not sound.

Recommended parts to prepare: Additional refrigerant

Troubleshooting and repair:

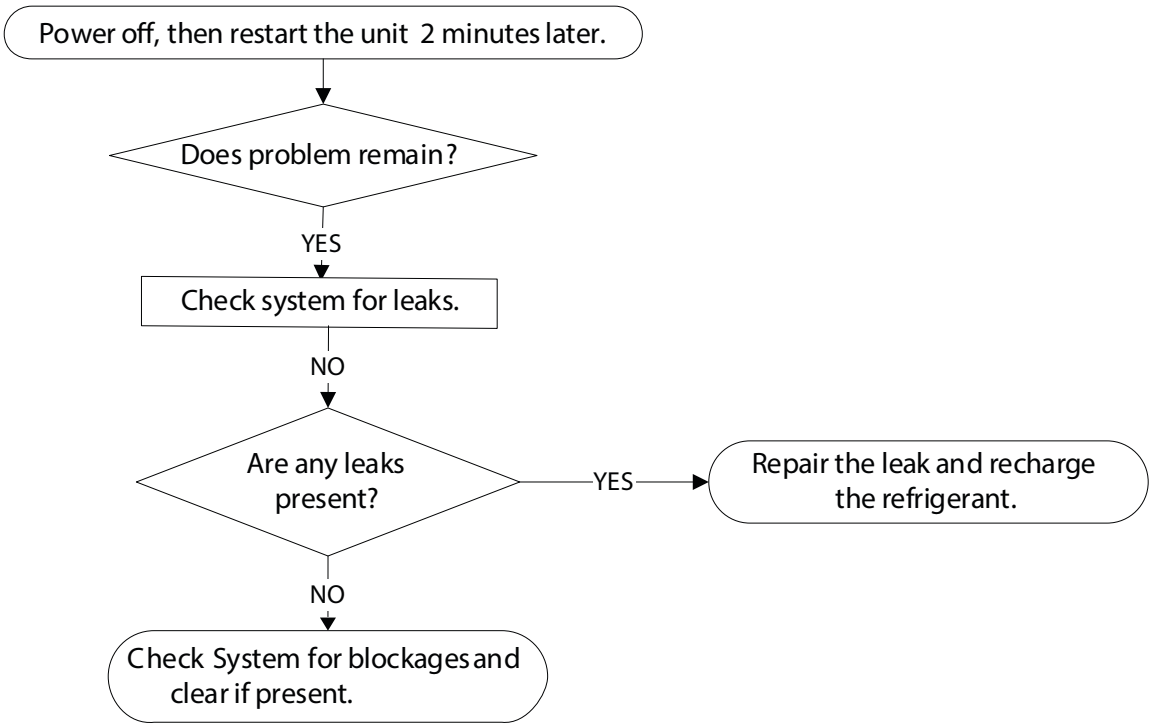

EC 0d (ODU Malfunction Diagnosis and Solution)

Description: The indoor unit detects the outdoor unit in error.

Recommended parts to prepare: Outdoor unit

Troubleshooting and repair:

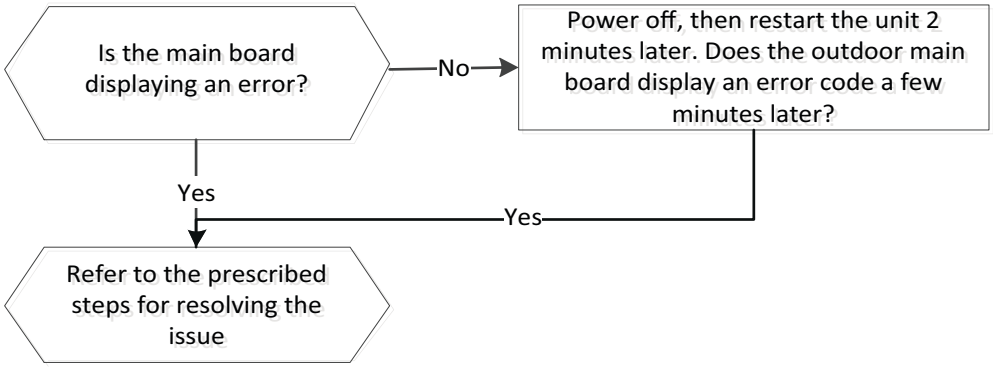

EH 0b (IDU Main Control Board and Display Board Communication Error Diagnosis and Solution)

Description: Indoor PCB does not receive feedback from the display board.

Recommended parts to prepare: Communication wire, Indoor PCB, Display board

Troubleshooting and repair:

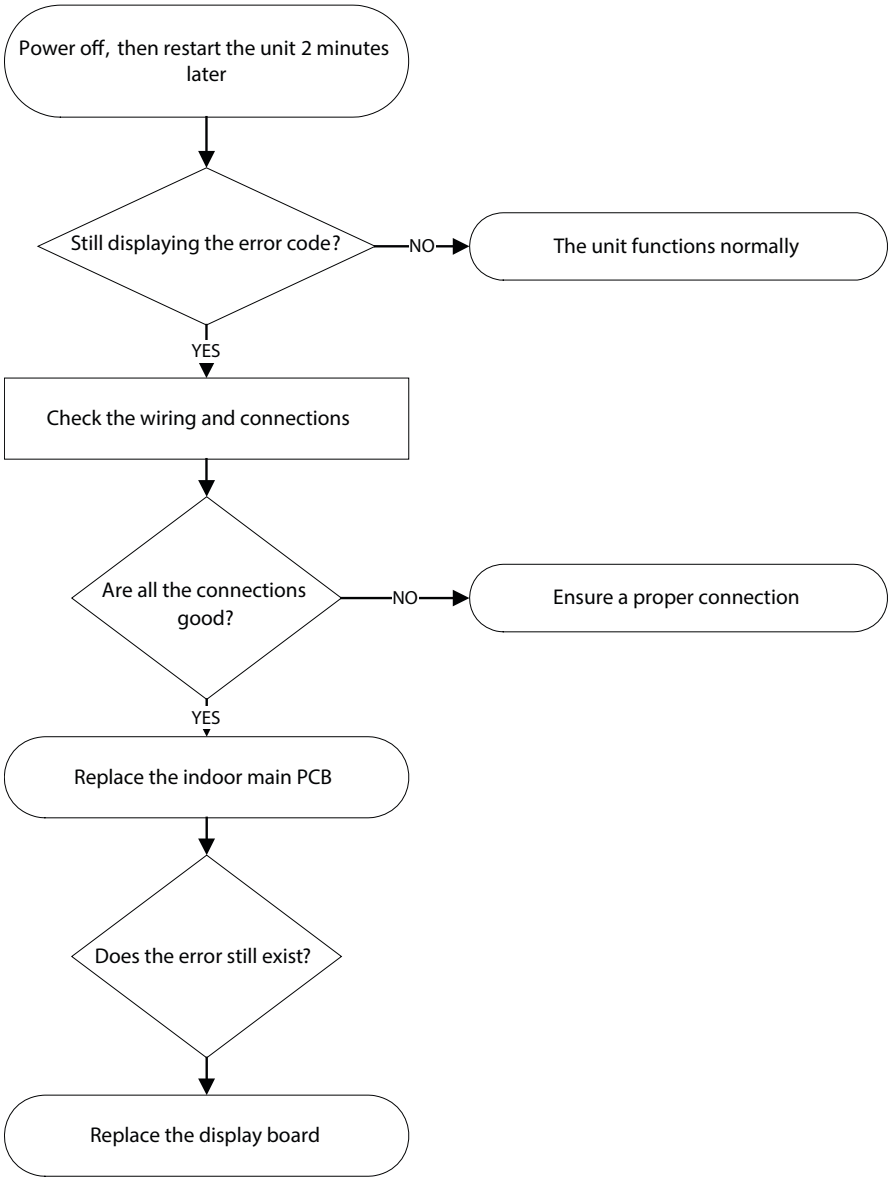

EL 16 (Communication Malfunction Between Adapter Board and Outdoor Main Board Diagnosis and Solution)

Description: The adapter PCB cannot detect the main control board.

Recommended parts to prepare: Connection wires, Adapter board, Outdoor main PCB

Troubleshooting and repair:

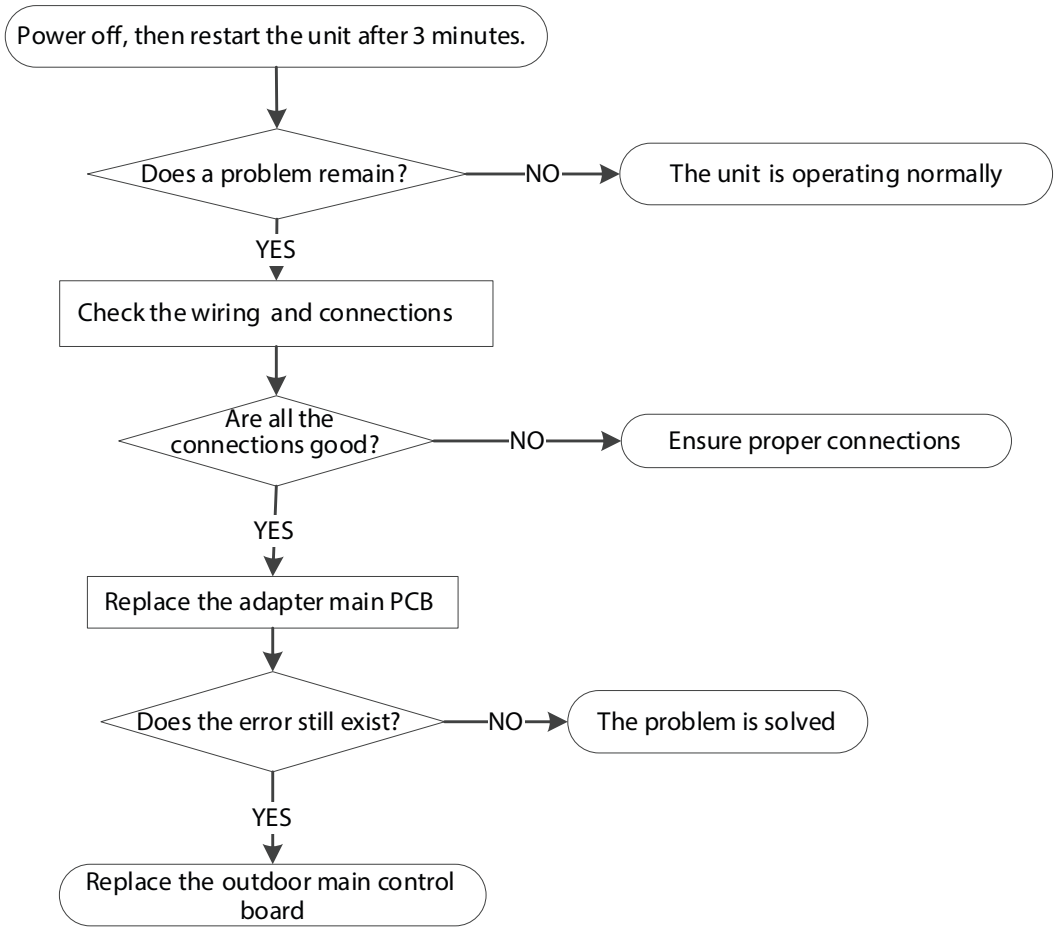

FL 09 (Mismatch between the new and old platforms diagnosis and solution)

Description: Indoor and outdoor units are mismatched, the LED displays this code. Please replace the matching indoor or outdoor unit.

PH 90 (High temperature protection of evaporator diagnosis and solution)

Description: When evaporator coil temperature is more than 60°C in heating mode, the unit stops. It starts again only when the evaporator coil temperature is less than 52°C.

Recommended parts to prepare: Connection wires, Evaporator coil temperature sensor (T2), Indoor fan, Indoor main PCB

Troubleshooting and repair:

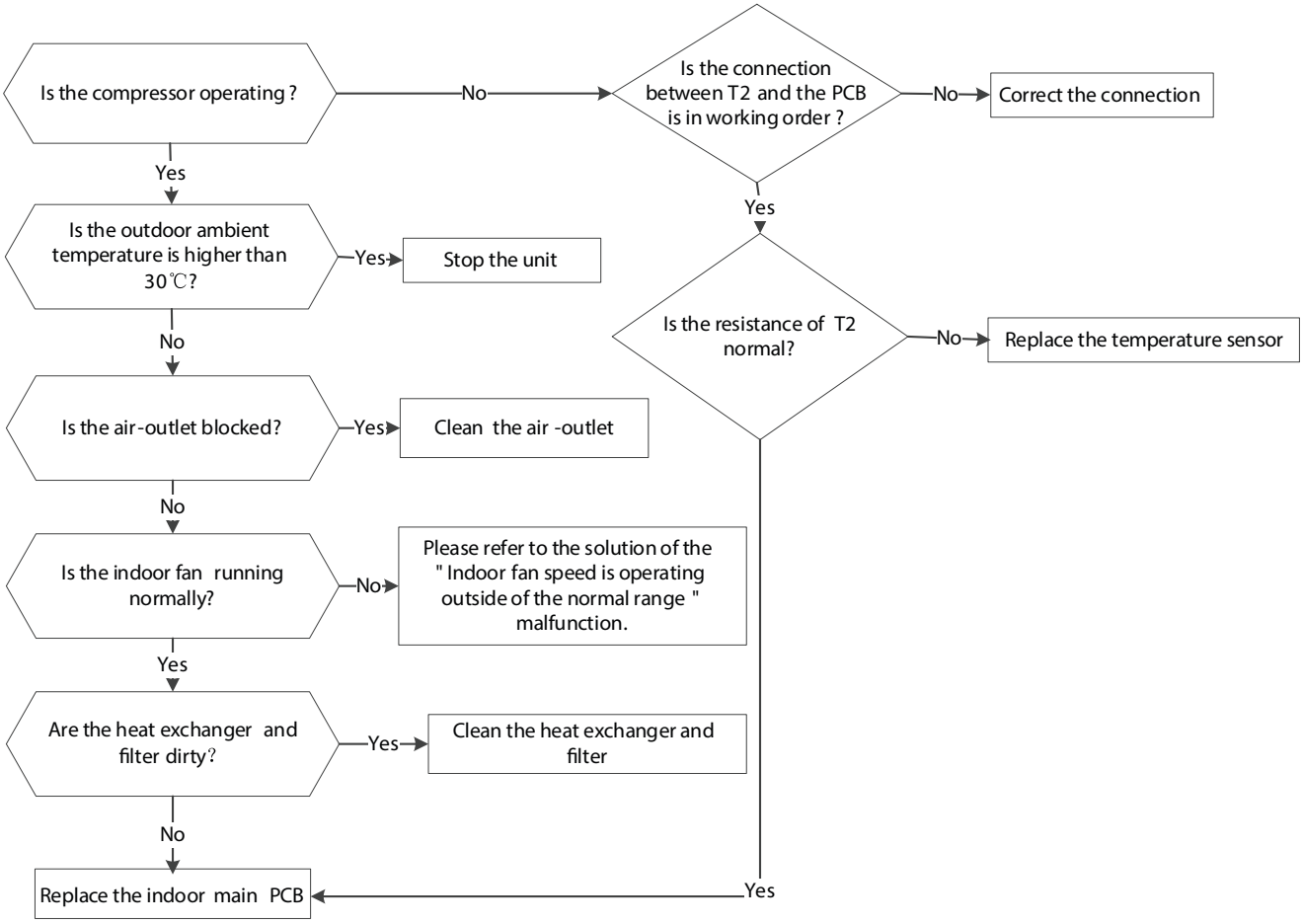

PH 91 (Low temperature protection of evaporator diagnosis and solution)

Description: When evaporator coil temperature is lower than 0°C in cooling mode or drying mode, the unit stops. It starts again only when the evaporator coil temperature is more than 5°C.

Recommended parts to prepare: Connection wires, Evaporator coil temperature sensor (T2), Indoor main PCB

Troubleshooting and repair:

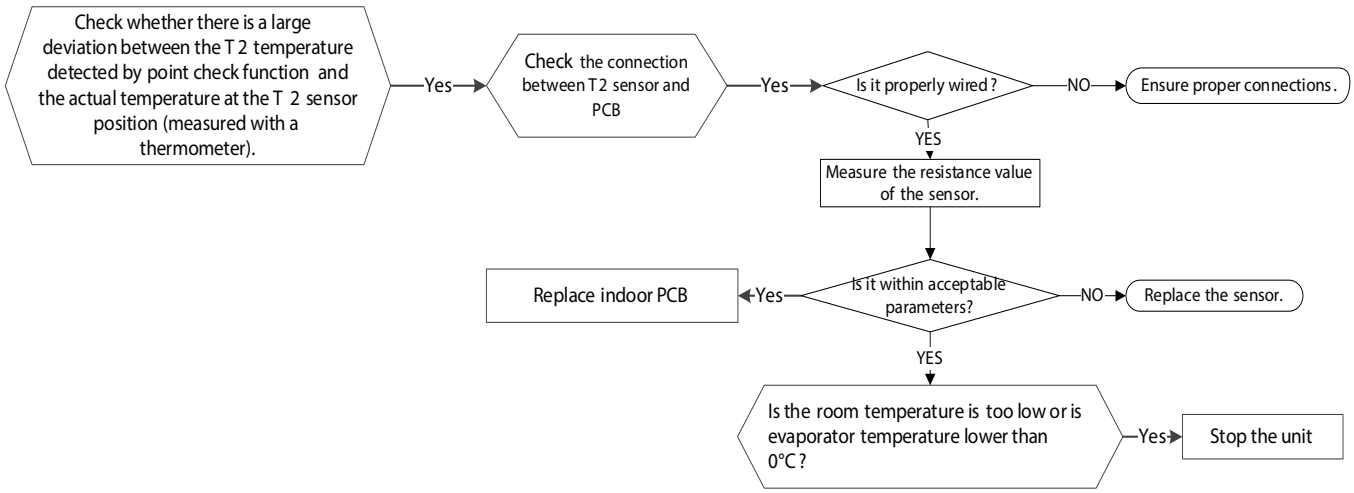

CHECK PROCEDURES

Temperature Sensor Check

WARNING

ELECTRICAL SHOCK HAZARD

Be sure to turn off all power supplies or disconnect all wires to avoid electric shock. Operate after compressor and coil have returned to normal temperature in case of injury.

1. Disconnect the temperature sensor from the PCB.
2. Measure the sensor's resistance value with a multi-meter.
3. Check the corresponding temperature sensor resistance value table (see "Temperature Sensor Resistance Value Table for TP (°C - K)" on page 93 and "Other Temperature Sensors Resistance Value Table (°C - K)" on page 94).

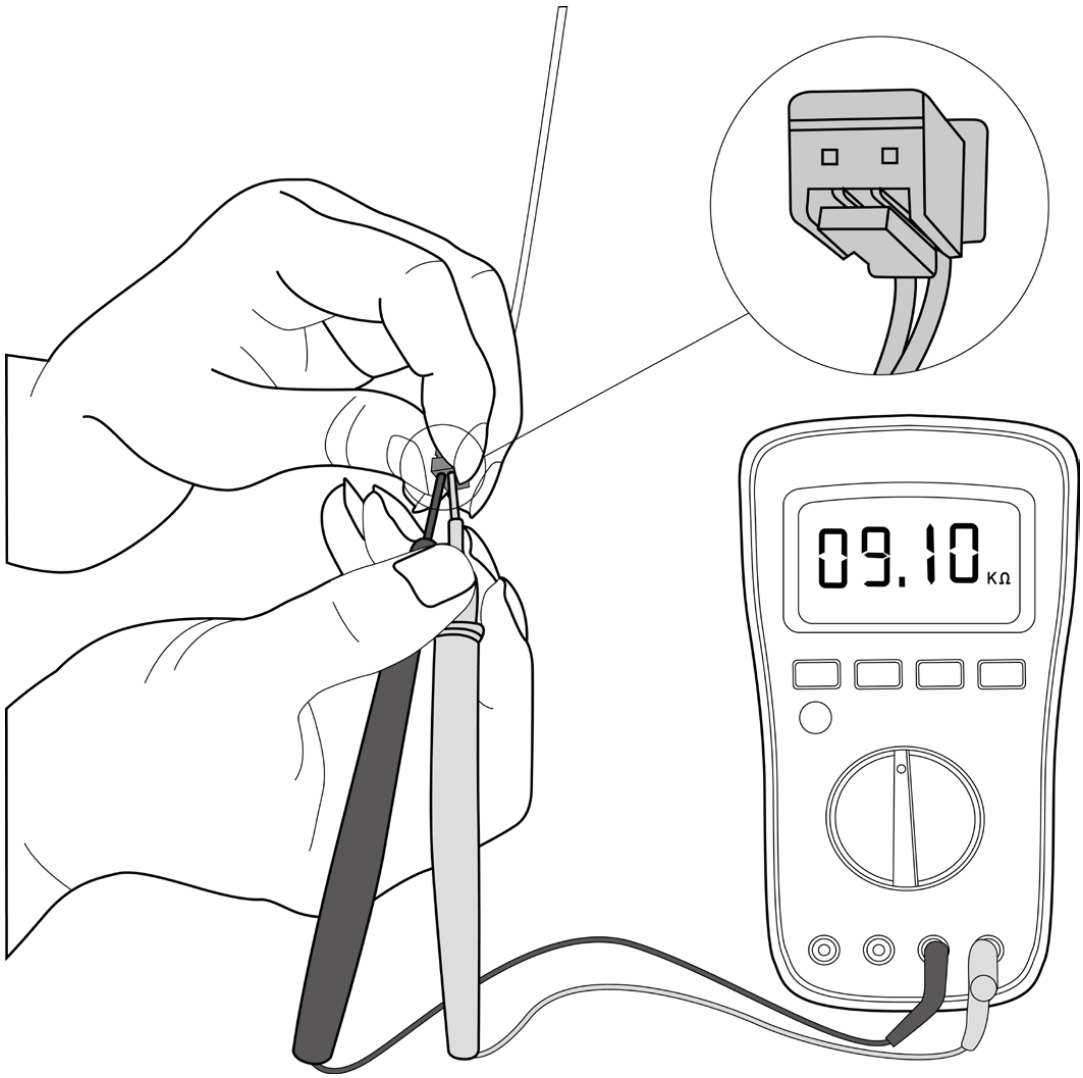

Fig. 32 —Measure the Sensor's Resistance Value

Compressor Check

1. Disconnect the compressor power cord from the outdoor PCB.
2. Measure the resistance value of each winding using a multi-meter.
3. Check the resistance value of each winding in tables 9 through 12:

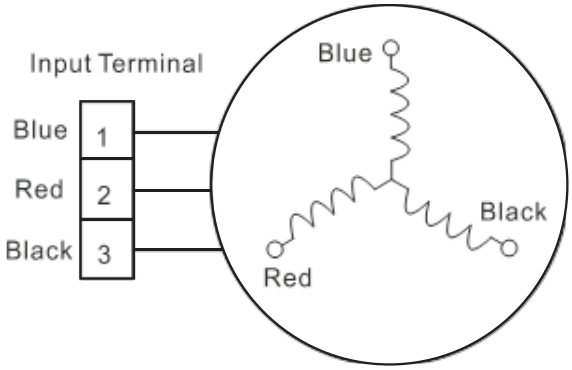

Fig. 33 —Compressor Check

Table 5 – Resistance Values

Resistance Value	KTN150D30UFZA	KTM240D46UKT2	KTF310D43UMT	ETPQ420D1UMUA ETPQ440D1UMUB KTQ420D1UMU
Blue-Red	1.02Ω	1.04Ω	0.65Ω	0.37Ω
Blue-Black				
Red-Black				

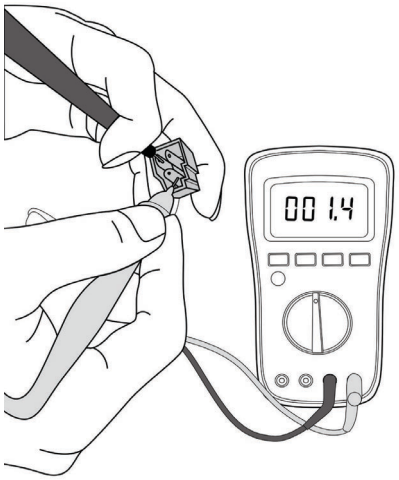

Fig. 34 —Resistance Check

NOTE: The picture and the value are only for reference, actual condition and specific value may vary.

IPM Continuity Check

WARNING

ELECTRICAL SHOCK HAZARD

Electricity remains in capacitors even when the power supply is off. Ensure the capacitors are fully discharged before troubleshooting.

1. Turn off outdoor unit and disconnect power supply.
2. Discharge electrolytic capacitors and ensure all energy-storage unit has been discharged.
3. Disassemble outdoor PCB or disassemble IPM board.
4. Measure the resistance value between P and U(V, W, N); U(V, W) and N.

Table 6 – Resistance Value

Digital Tester		Resistance Value	Digital Tester		Resistance Value
(+) Red	(-) Black		(+) Red	(-) Black	
P	N	∞ (Several MΩ)	U	N	∞ (Several MΩ)
	U		V		
	V		W		
	W		-		

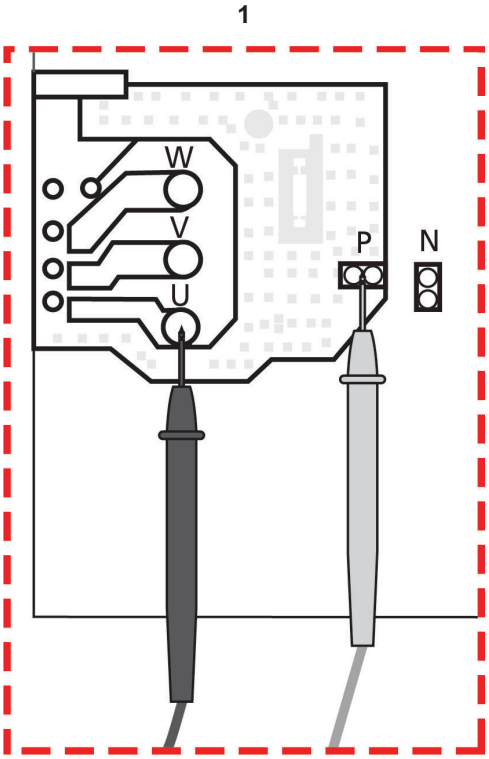

Fig. 35 —Resistance Value

Table 7 – Voltage Range

208-240V (1-phase)		
In Standby		
Around 310VDC		
In Operation		
With passive PFC module	With partial active PFC module	With fully active PFC module
>200VDC	>310VDC	>370VDC

4-Way Valve Check

1. Power on, use a digital tester to measure the voltage, when the unit operates in cooling, it is 0V. When the unit operates in heating, it is about equal to power supply voltage.
   If the value of the voltage is not in the range, the PCB must be faulty and needs to be replaced.

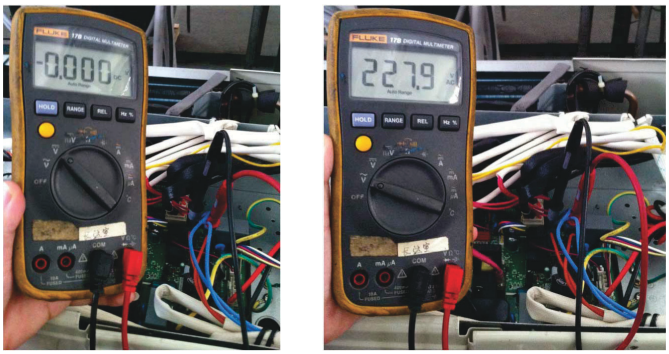

Fig. 36 —Voltage Test - Heating/Cooling

2. Turn off the power, use a digital tester to measure the resistance. The value should be 1.8~2.5 KÙ.

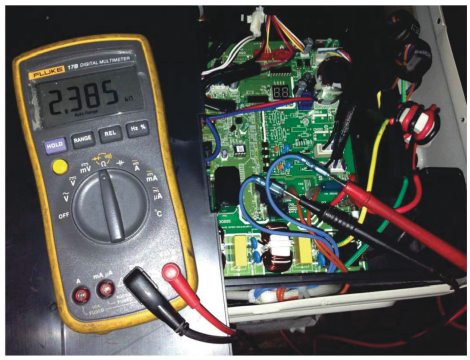

Fig. 37 —Resistance Test

EXV Check

1. Turn off outdoor unit and disconnect power supply.
2. Disconnect the connectors of EXV.

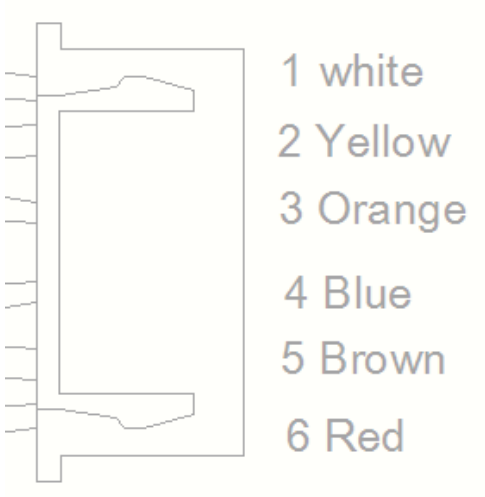

3. Measure the resistance value between Red and Blue (Yellow); Brown and Orange (White).

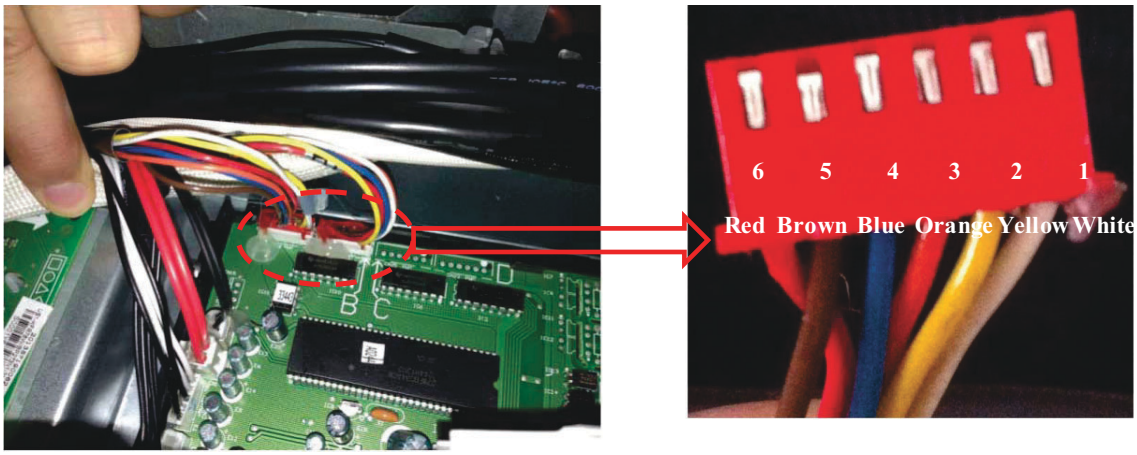

Resistance to EXV coil

Color of Lead Wire	Normal Value
Red-Blue	**About 50Ω**
Red-Yellow	
Brown-Orange	
Brown-White	

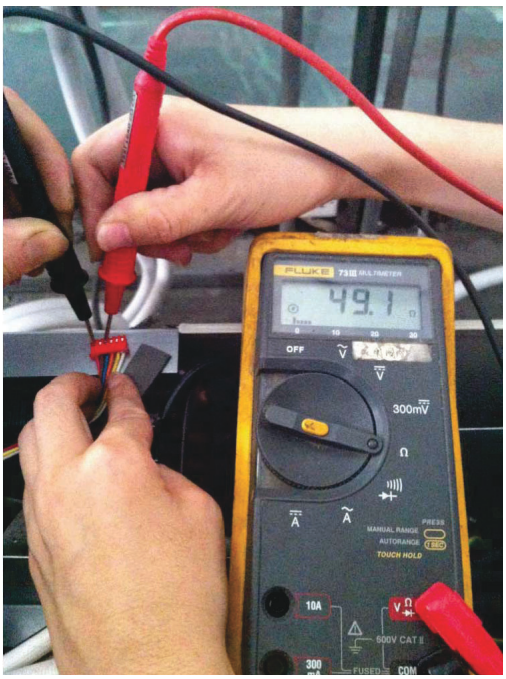

Fig. 38 —Resistance Check - Step 1 (Red-Blue)

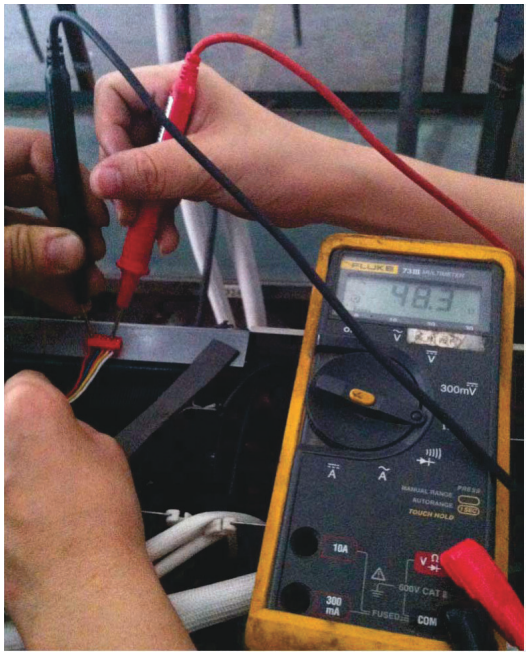

Fig. 39 —Resistance Check - Step 2 (Red-Yellow)

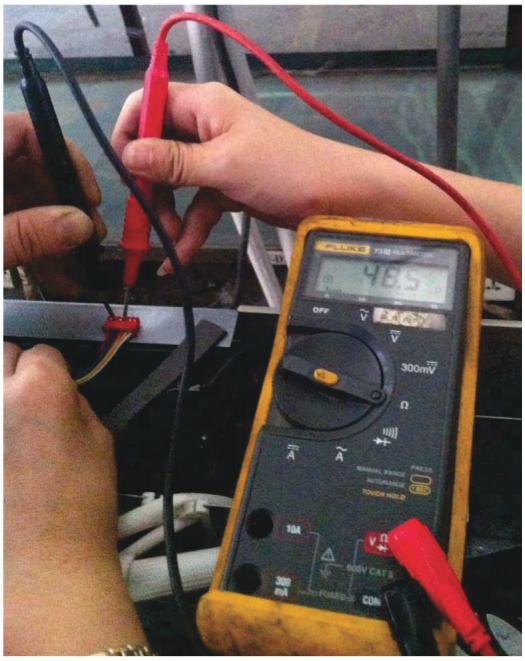

Fig. 40 —Resistance Check - Step 3 (Brown-Orange)

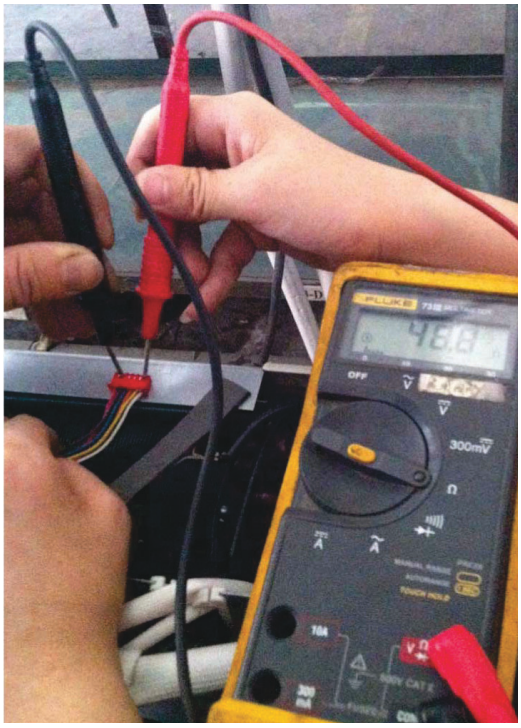

Fig. 41 —Resistance Check - Step 4 (Brown-White)

DISASSEMBLY INSTRUCTIONS

37MBRAQ 36K Unit Disassembly - Panel Plate

PROCEDURES	ILLUSTRATION
1. Turn off the air conditioner and the power breaker. 2. Remove the 2 handle screws then remove the handle.. (see illustration)	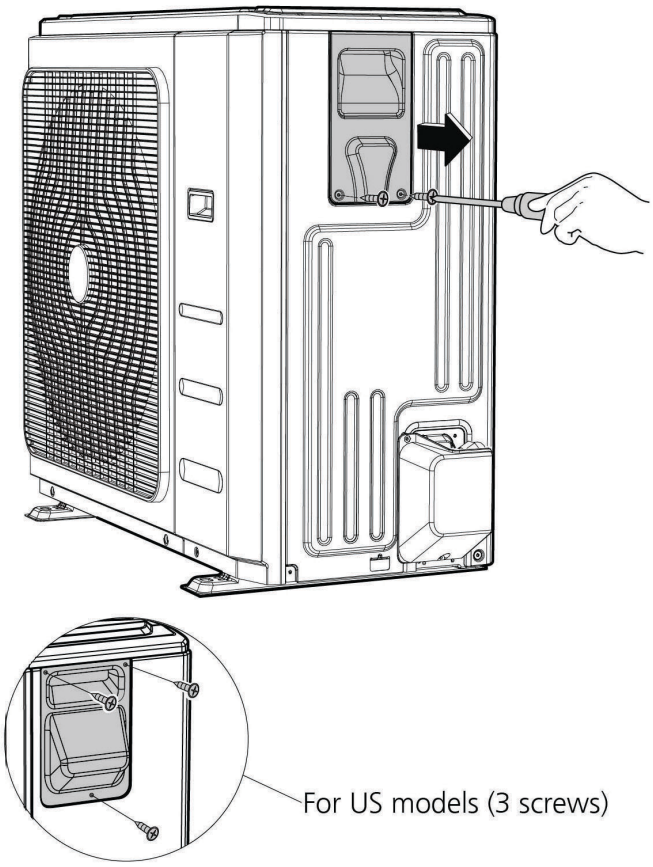
3. Remove the 4 top cover screws then remove the top cover. Two of the screws are located under the handle. (see illustration)	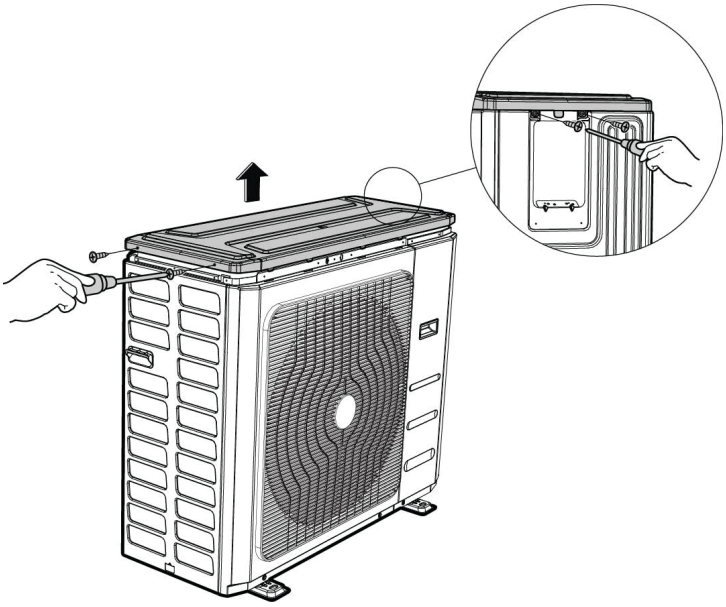

PROCEDURES	ILLUSTRATION
4. Remove the 2 screws of the front right panel then remove the front right panel. (see illustration)	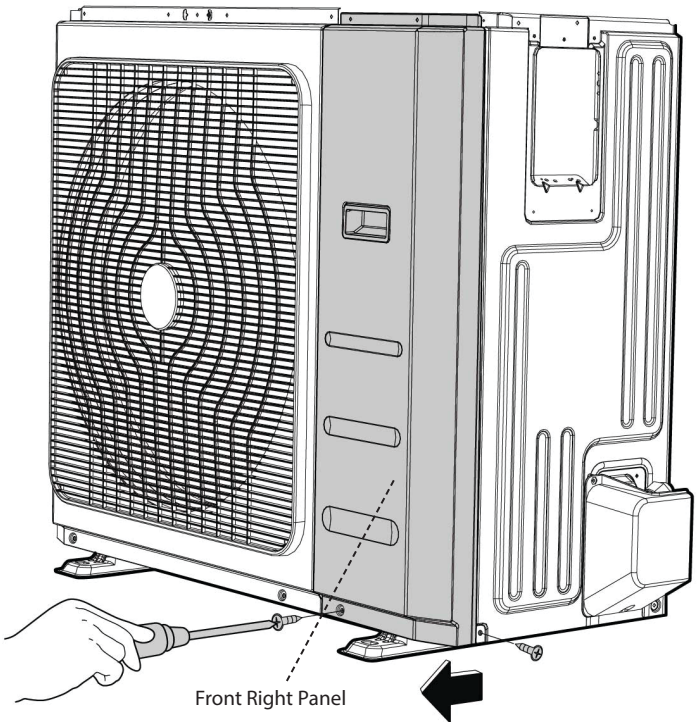
5. Remove the 9 screws from the front panel then remove the front panel. (see illustration)	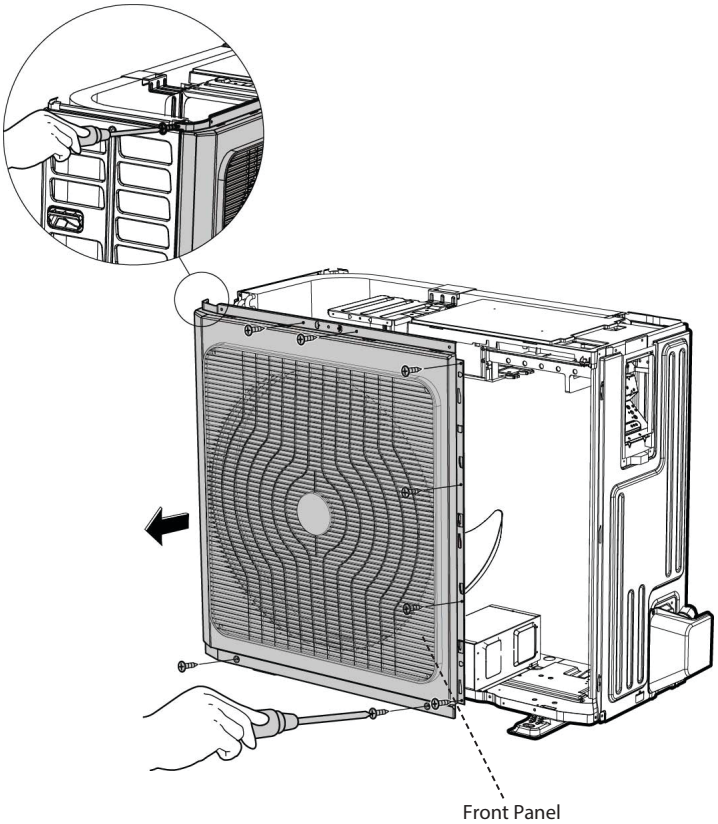

PROCEDURES	ILLUSTRATION
6. Remove the 2 screws from the water collecting cover then remove the water collecting cover. (see illustration)	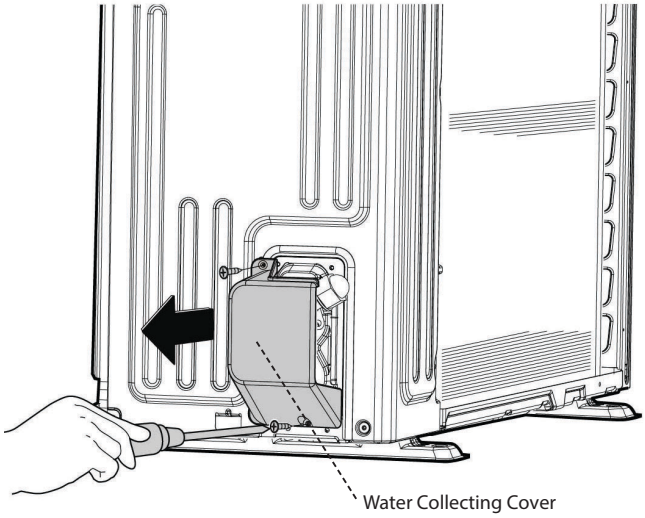
7. Remove the 2 screws of the rear net then remove the rear net. (see illustration)	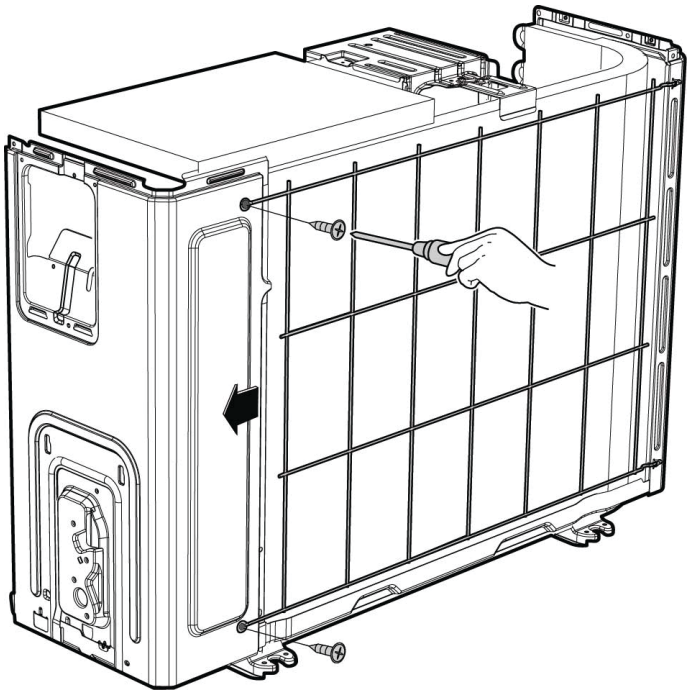

PROCEDURES	ILLUSTRATION
8. Remove the 8 right panel screws then remove the right panel. (see illustration)	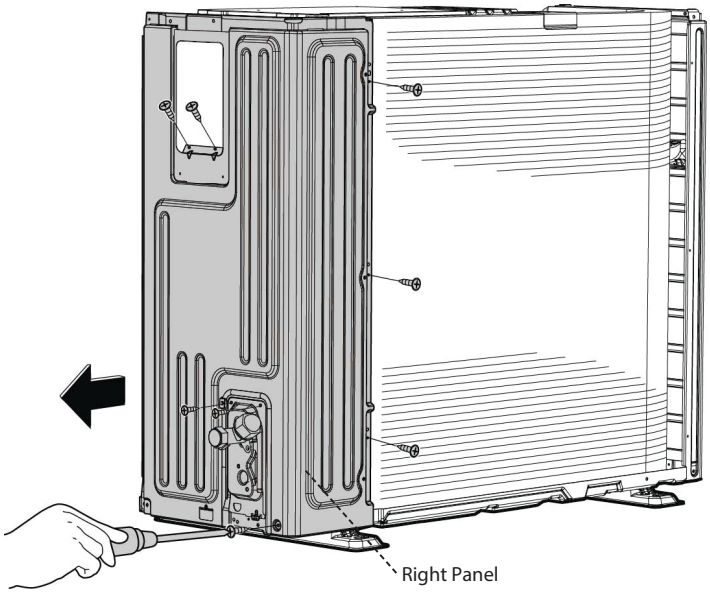

37MBHAQ 36K Unit Disassembly - Panel Plate

PROCEDURES	ILLUSTRATION
1. Turn off the air conditioner and the power breaker 2. Remove the screws of the top cover and then remove the top cover (7 screws). (see illustration)	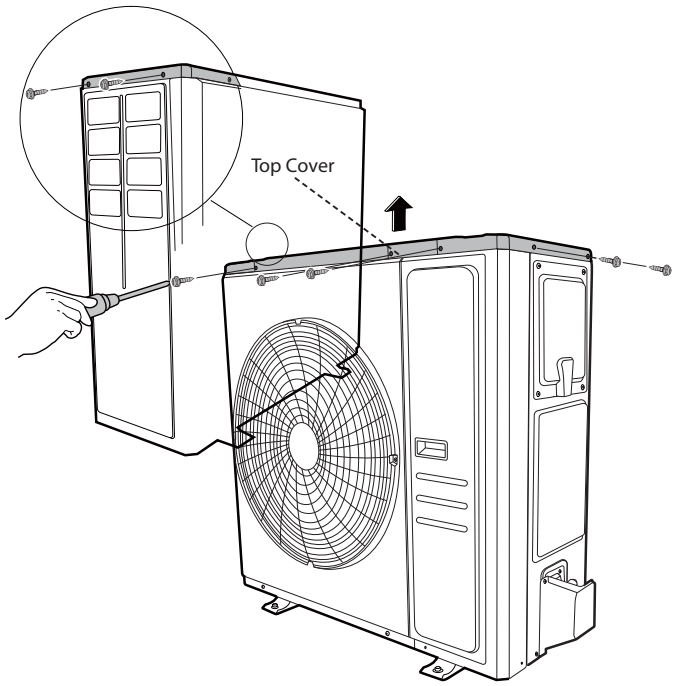
3. Remove the screws of the front right panel and then remove the front right panel (2 screws) (see illustration)	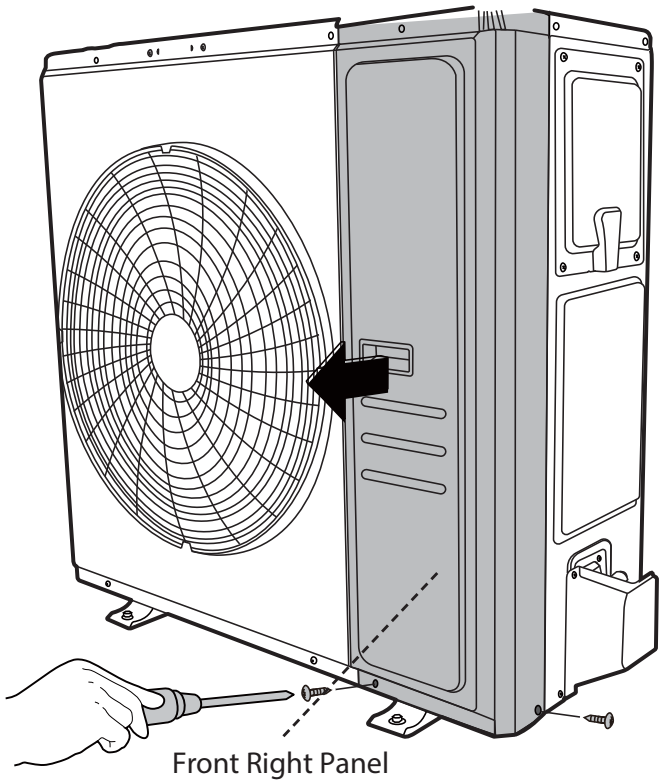

PROCEDURES	ILLUSTRATION
4. Remove the screws of the front panel and then remove the front panel (8 screws) (see illustration)	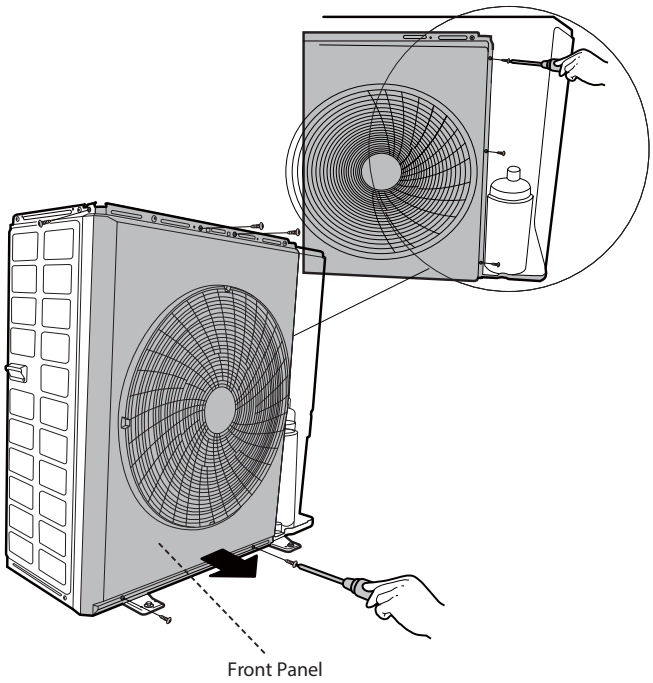
5. Remove the screws of the big handle and then remove the big handle (4 screws). (see illustration)	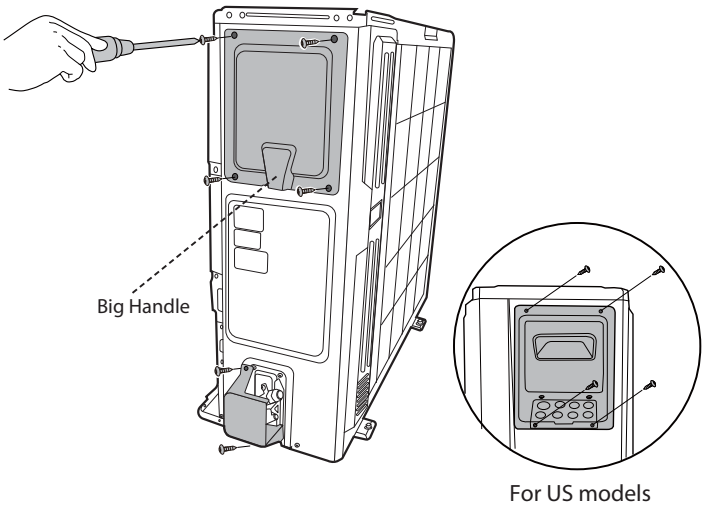

PROCEDURES	ILLUSTRATION
6. Remove the screws of water collecting cover and then remove the water collecting cover (2 screws). (see illustration)	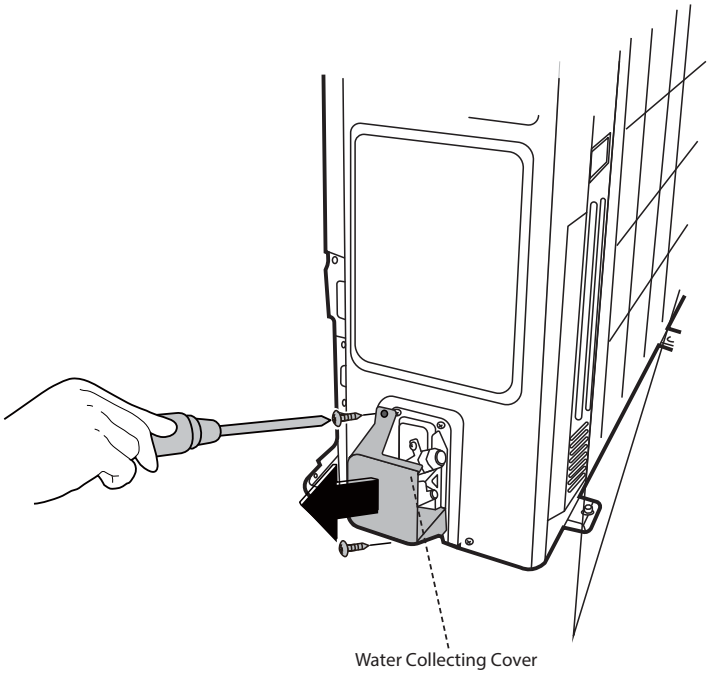
7. Remove the screws of the rear net and then remove the rear net (4 screws). (see illustration)	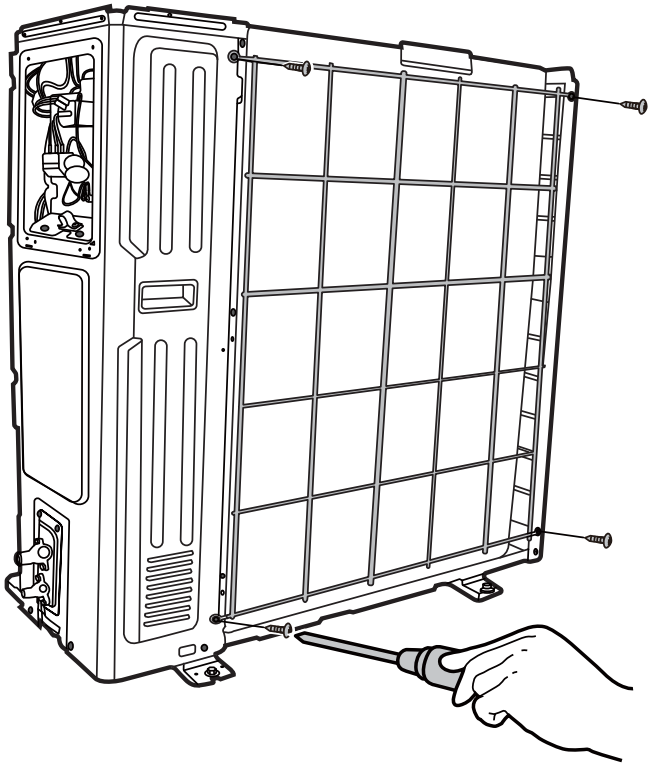

PROCEDURES	ILLUSTRATION
8. Remove the screws of the right panel and then remove the right panel (10 screws) (see illustration)	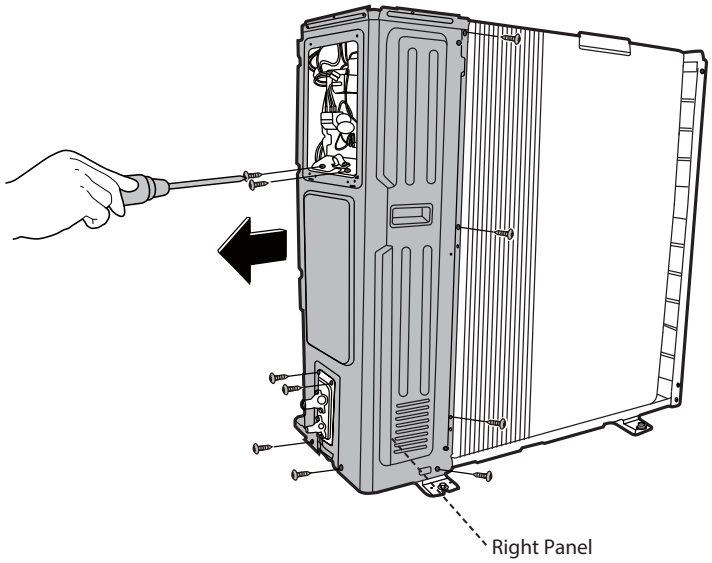

48K-55K (All Models) Unit Disassembly - Panel Plate

PROCEDURES	ILLUSTRATION
1. Turn off the air conditioner and the power breaker 2. Remove the 2 screws of the handle then remove the handle. (see illustration)	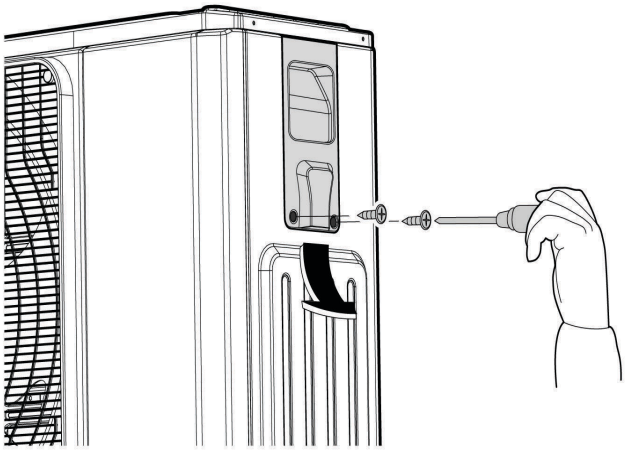
3. Remove the the 4 top cover screws then remove the top cover. Two of the screws are located under the handle. (see illustration)	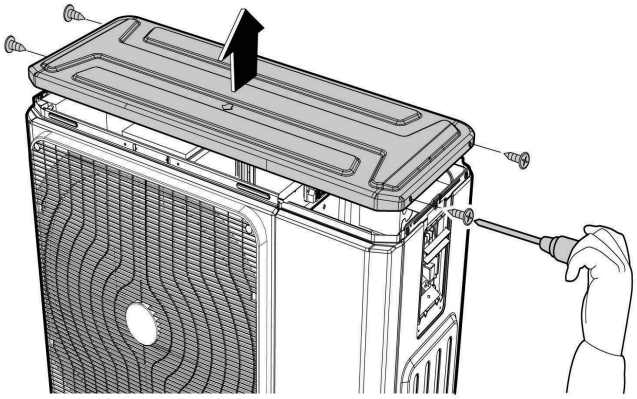
4. Remove the 2 water collecting cover screws then remove the water collecting cover. (see illustration)	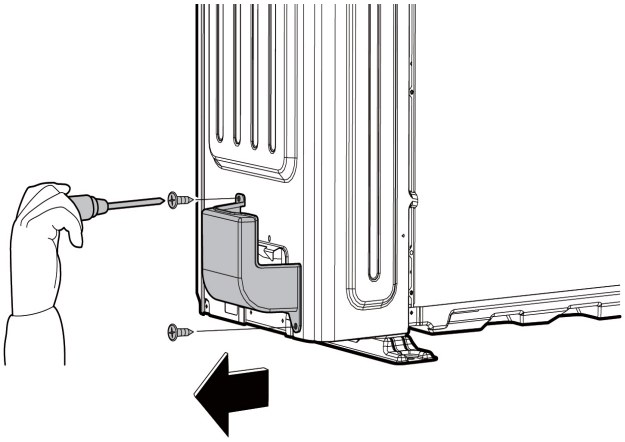

PROCEDURES	ILLUSTRATION
5. Remove the 2 screws of the front right panel then remove the front right panel. (see illustration)	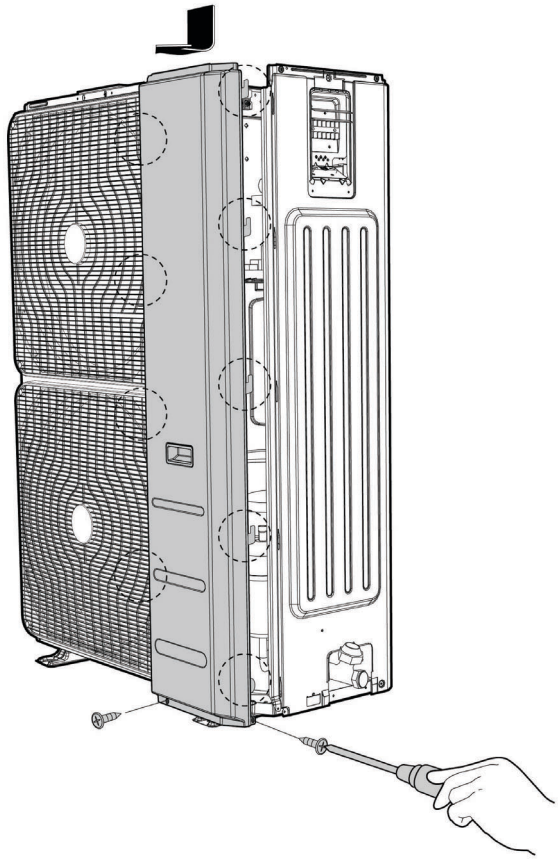
6. Remove the 7 front panel screws then remove the front panel. (see illustration)	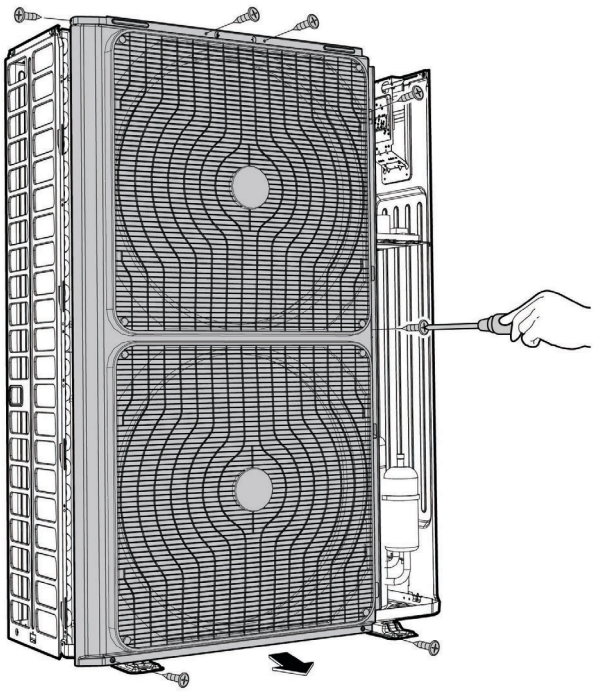

PROCEDURES	ILLUSTRATION
7. Remove the 10 right panel screws then remove the right panel. (see illustration)	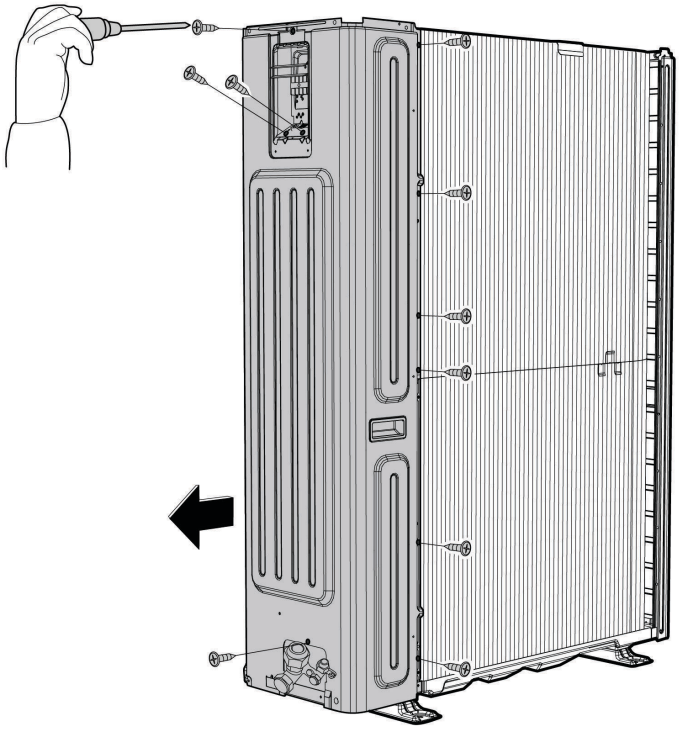

36K (All Models) Disassembly - Electrical Parts

NOTE: Anti-static gloves must be worn when you disassemble the electronic box.

PROCEDURES	ILLUSTRATION
1. Remove the cover of electrical control box.(see illustration)	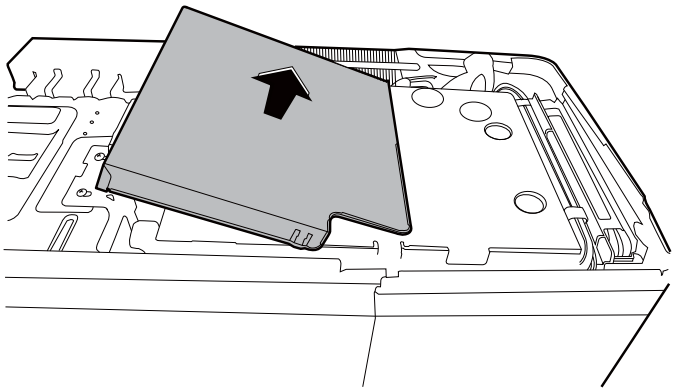
2. Disconnect the fan motor connector. (see illustration)	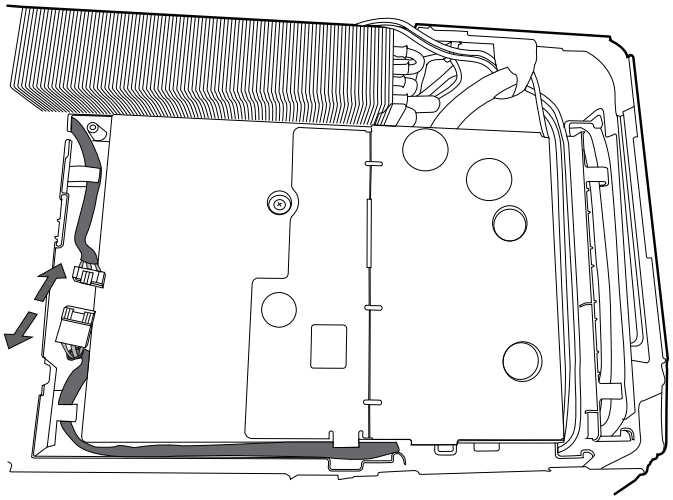
3. Remove eight attaching screws. (see illustration) 4. Turn over the electronic control box subassembly.	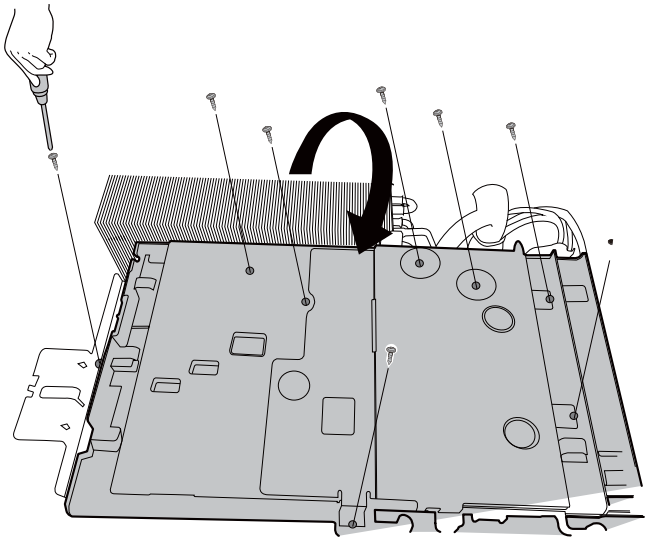

PROCEDURES	ILLUSTRATION
5. Remove 3 screws and then remove the bracket. (see illustration) 6. Disconnect the connectors from the electronic control board. (see illustration) 7. Remove 3 screws and then remove the electronic control board. (see illustration)	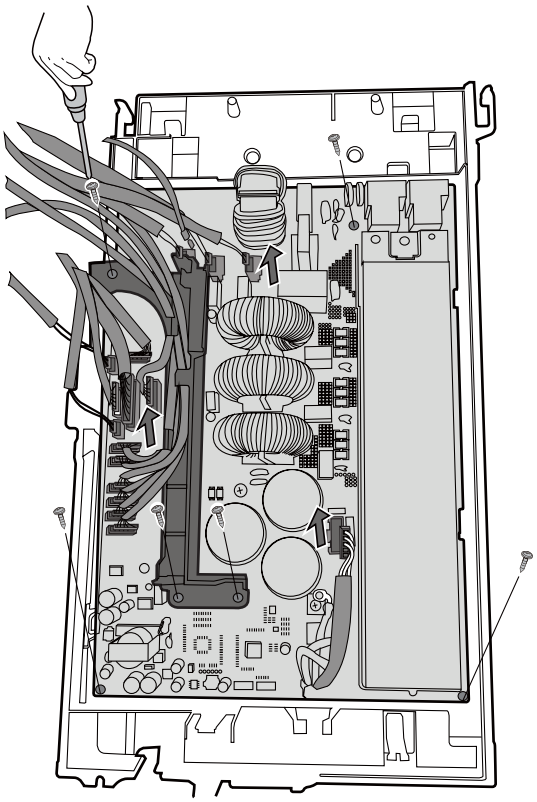
8. Pull out the connector, remove one screw and then remove the key board subassembly on terminal board. (see illustration)	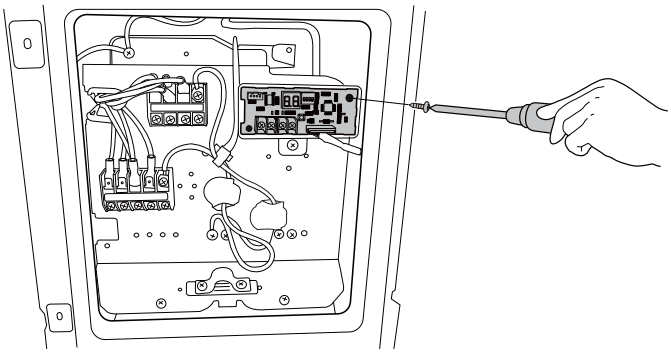

48K - 55K (All Models) Disassembly - Electrical Parts

NOTE: Anti-static gloves must be worn when you disassemble the electronic box

PROCEDURES	ILLUSTRATION
1. Disconnect the connectors from the electronic control board. (see illustration) 2. Remove 3 screws and then remove the electronic control board.(see illustration)	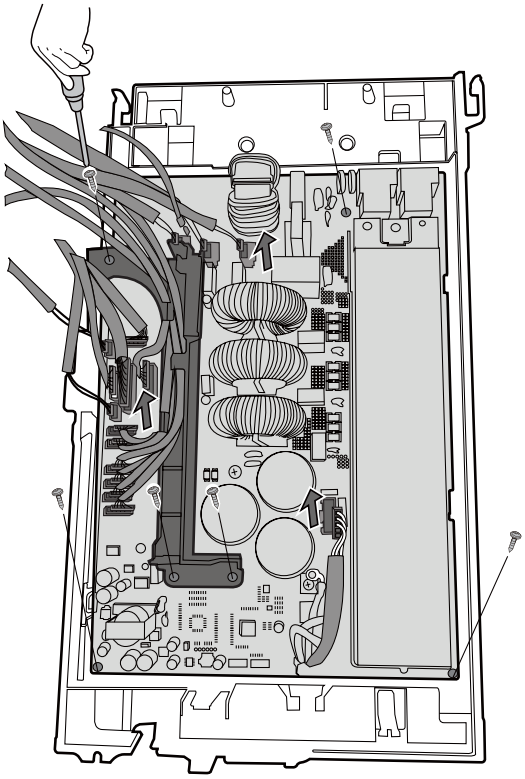
3. Pull out the connector, remove one screw and then remove the key board subassembly on terminal board. (see illustration)	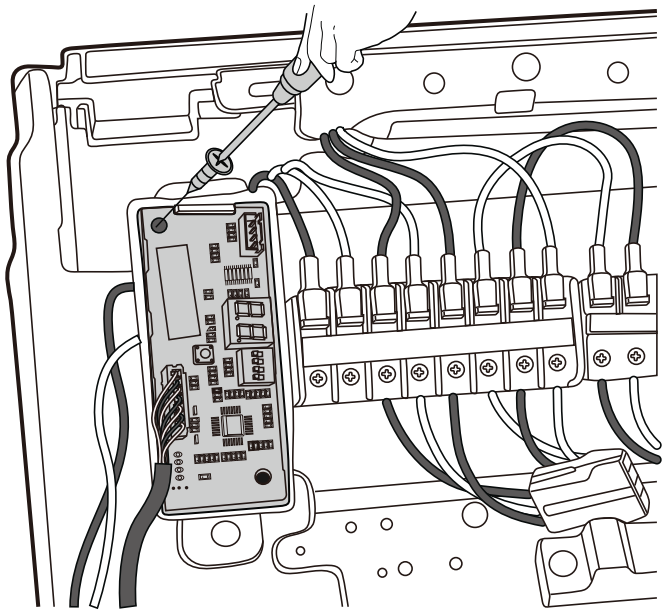

All Size Units, Disassembly - Fan Assembly

PROCEDURES	ILLUSTRATION
1. Remove the nut securing the fan with a spanner. 2. Remove the fan. (see illustration)	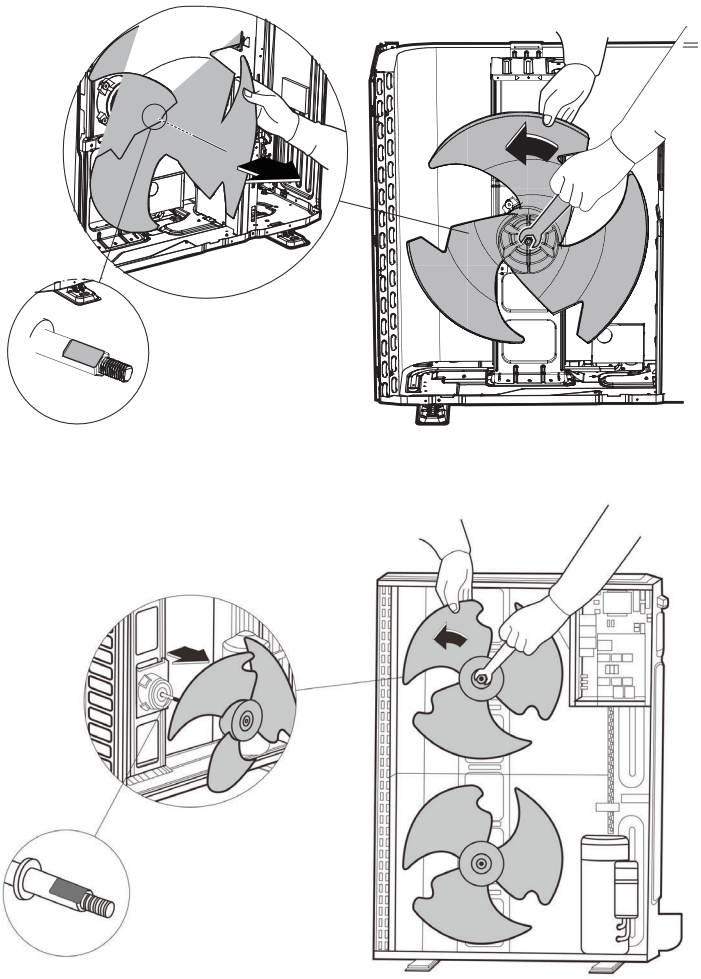

All Size Units, Disassembly - Fan Motor

PROCEDURES	ILLUSTRATION
1. Remove the attaching screws of the fan motor (4 screws) 2. Remove the fan motor. (see illustration)	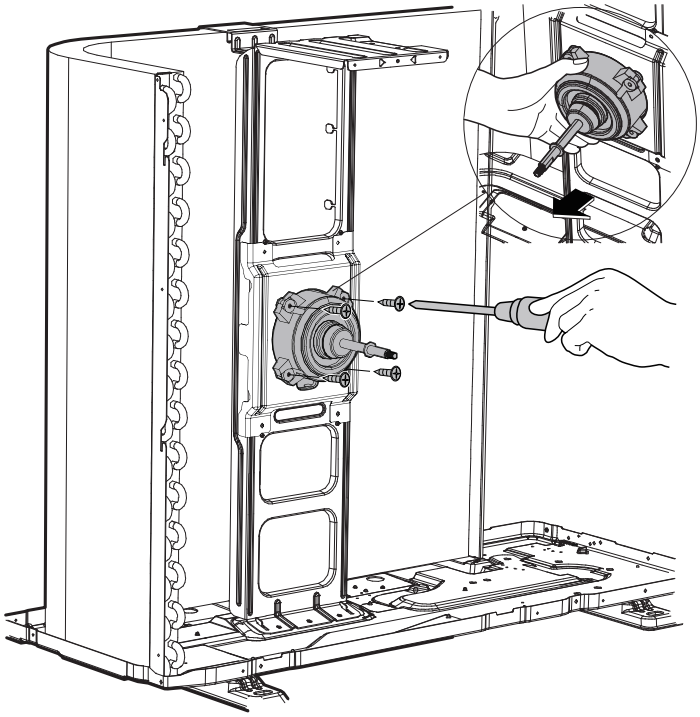

All Size Units, Disassembly - Sound Blanket

PROCEDURES	ILLUSTRATION
1. Remove the sound blanket (side and top)) (see illustration)	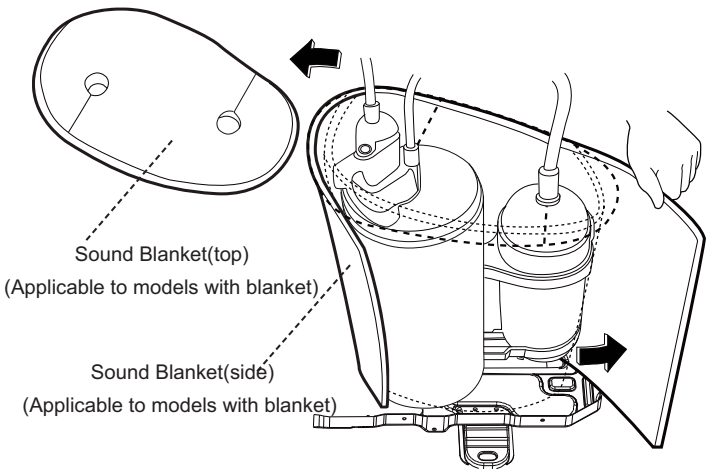

All Size Units, Disassembly - Four-Way Valve

⚠ WARNING

FIRE HAZARD

Evacuate the system and confirm that there is no refrigerant left in the system before removing the four-way valve and the compressor. (For R32 & R290, you should evacuate the system with the vacuum pump; flush the system with nitrogen; then repeat the two steps before heating up the brazed parts. The operations above should be implemented by professionals.)

PROCEDURES	ILLUSTRATION
1. Heat up the brazed parts and then detach the the four-way valve and the piper. (see illustration) 2. Remove the four-way valve assembly with pliers. (see illustration)	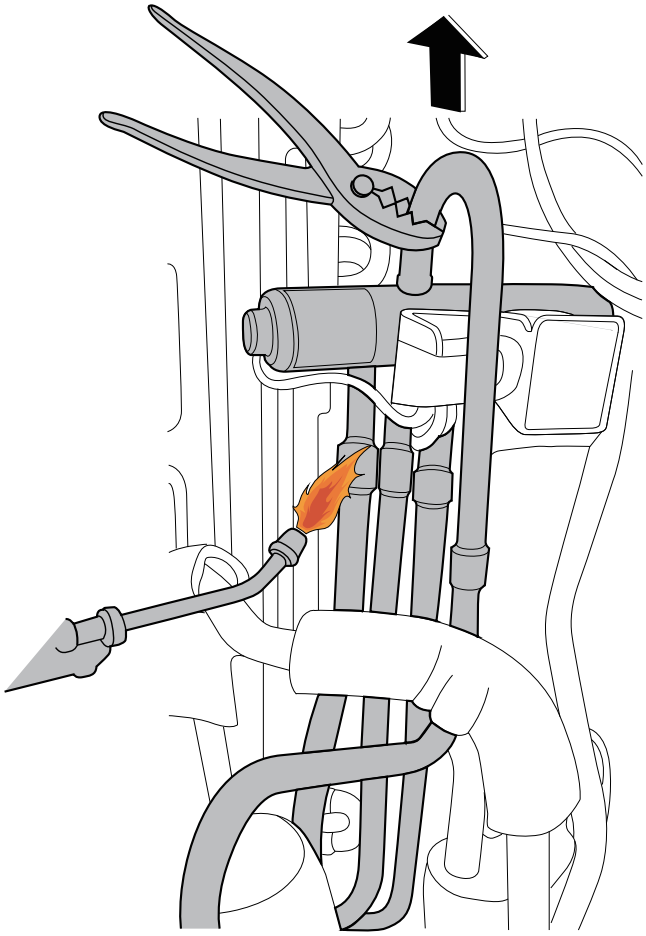

All Size Units, Disassembly - Compressor

⚠ WARNING

EXPLOSION RISK

Evacuate the system and confirm that there is no refrigerant left in the system before removing the four-way valve and the compressor. (For R32 & R290, you should evacuate the system with the vacuum pump; flush the system with nitrogen; then repeat the two steps before heating up the brazed parts. The operations above should be implemented by professionals.)

PROCEDURES	ILLUSTRATION
1. Remove the flange nut of terminal cover and remove the terminal cover (see illustration)	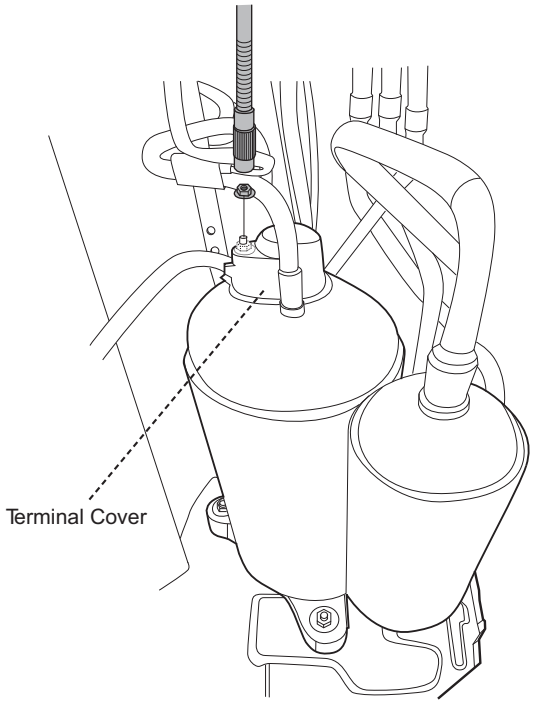
2. Disconnect the connectors	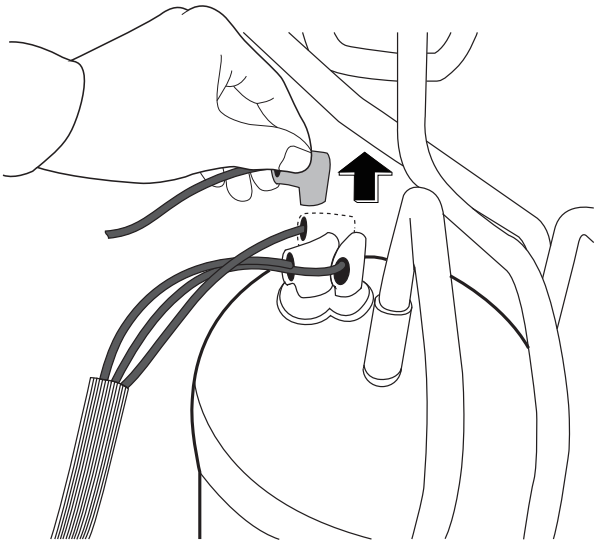

PROCEDURES	ILLUSTRATION
3. Remove the hex nuts and washers securing the compressor, located on the bottom plate. (see illustration)	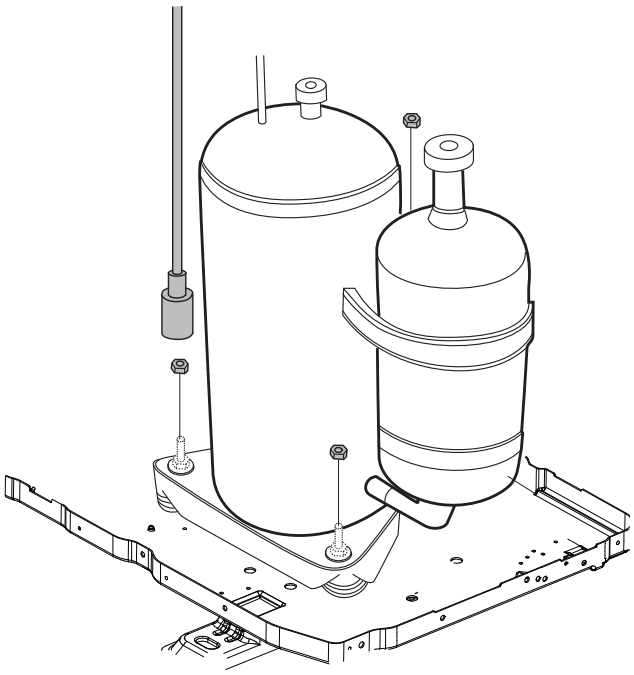
4. Heat up the brazed parts and then remove the the discharge pipe and the suction pipe. (see illustration) 5. Lift the compressor from the base pan assembly with pliers. (see illustration)	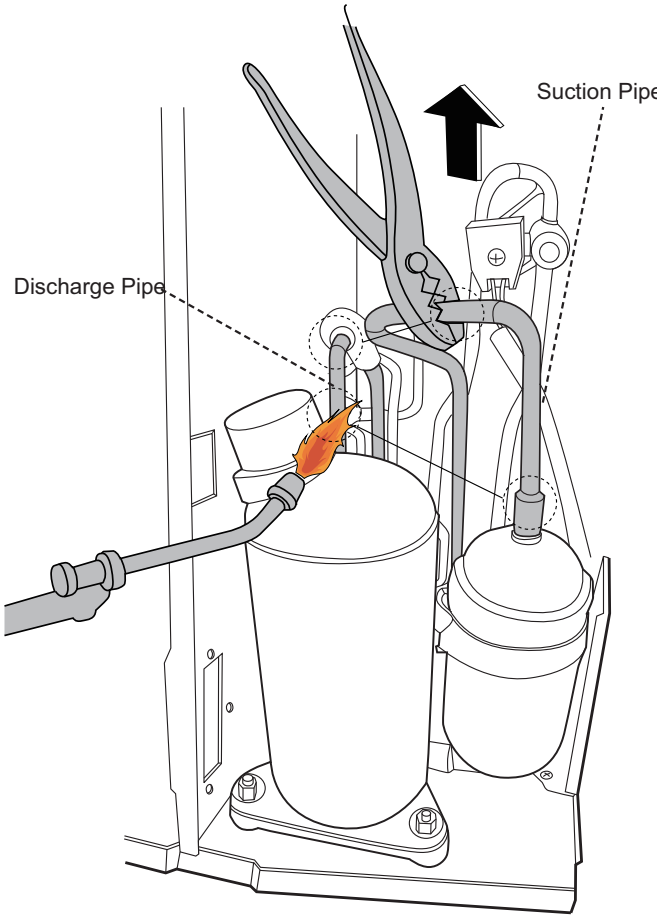

APPENDIX

Temperature Sensor Resistance Value Table for TP (°C - K)

°C	°F	K Ohm	°C	°F	K Ohm	°C	°F	K Ohm	°C	°F	K Ohm
-20	-4	542.7	20	68	68.66	60	140	13.59	100	212	3.702
-19	-2	511.9	21	70	65.62	61	142	13.11	101	214	3.595
-18	0	483	22	72	62.73	62	144	12.65	102	216	3.492
-17	1	455.9	23	73	59.98	63	145	12.21	103	217	3.392
-16	3	430.5	24	75	57.37	64	147	11.79	104	219	3.296
-15	5	406.7	25	77	54.89	65	149	11.38	105	221	3.203
-14	7	384.3	26	79	52.53	66	151	10.99	106	223	3.113
-13	9	363.3	27	81	50.28	67	153	10.61	107	225	3.025
-12	10	343.6	28	82	48.14	68	154	10.25	108	226	2.941
-11	12	325.1	29	84	46.11	69	156	9.902	109	228	2.86
-10	14	307.7	30	86	44.17	70	158	9.569	110	230	2.781
-9	16	291.3	31	88	42.33	71	160	9.248	111	232	2.704
-8	18	275.9	32	90	40.57	72	162	8.94	112	234	2.63
-7	19	261.4	33	91	38.89	73	163	8.643	113	235	2.559
-6	21	247.8	34	93	37.3	74	165	8.358	114	237	2.489
-5	23	234.9	35	95	35.78	75	167	8.084	115	239	2.422
-4	25	222.8	36	97	34.32	76	169	7.82	116	241	2.357
-3	27	211.4	37	99	32.94	77	171	7.566	117	243	2.294
-2	28	200.7	38	100	31.62	78	172	7.321	118	244	2.233
-1	30	190.5	39	102	30.36	79	174	7.086	119	246	2.174
0	32	180.9	40	104	29.15	80	176	6.859	120	248	2.117
1	34	171.9	41	106	28	81	178	6.641	121	250	2.061
2	36	163.3	42	108	26.9	82	180	6.43	122	252	2.007
3	37	155.2	43	109	25.86	83	181	6.228	123	253	1.955
4	39	147.6	44	111	24.85	84	183	6.033	124	255	1.905
5	41	140.4	45	113	23.89	85	185	5.844	125	257	1.856
6	43	133.5	46	115	22.89	86	187	5.663	126	259	1.808
7	45	127.1	47	117	22.1	87	189	5.488	127	261	1.762
8	46	121	48	118	21.26	88	190	5.32	128	262	1.717
9	48	115.2	49	120	20.46	89	192	5.157	129	264	1.674
10	50	109.8	50	122	19.69	90	194	5	130	266	1.632
11	52	104.6	51	124	18.96	91	196	4.849	?	?	?
12	54	99.69	52	126	18.26	92	198	4.703	?	?	?
13	55	95.05	53	127	17.58	93	199	4.562	?	?	?
14	57	90.66	54	129	16.94	94	201	4.426	?	?	?
15	59	86.49	55	131	16.32	95	203	4.294	?	?	?
16	61	82.54	56	133	15.73	96	205	4.167	?	?	?
17	63	78.79	57	135	15.16	97	207	4.045	?	?	?
18	64	75.24	58	136	14.62	98	208	3.927	?	?	?
19	66	71.86	59	138	14.09	99	210	3.812	?	?	?

Manufacturer reserves the right to change, at any time, specifications and designs without notice and without obligations.

Other Temperature Sensors Resistance Value Table (°C - K)

°C	°F	K Ohm	°C	°F	K Ohm	°C	°F	K Ohm	°C	°F	K Ohm
-20	-4	115.266	20	68	12.6431	60	140	2.35774	100	212	0.62973
-19	-2	108.146	21	70	12.0561	61	142	2.27249	101	214	0.61148
-18	0	101.517	22	72	11.5	62	144	2.19073	102	216	0.59386
-17	1	96.3423	23	73	10.9731	63	145	2.11241	103	217	0.57683
-16	3	89.5865	24	75	10.4736	64	147	2.03732	104	219	0.56038
-15	5	84.219	25	77	10	65	149	1.96532	105	221	0.54448
-14	7	79.311	26	79	9.55074	66	151	1.89627	106	223	0.52912
-13	9	74.536	27	81	9.12445	67	153	1.83003	107	225	0.51426
-12	10	70.1698	28	82	8.71983	68	154	1.76647	108	226	0.49989
-11	12	66.0898	29	84	8.33566	69	156	1.70547	109	228	0.486
-10	14	62.2756	30	86	7.97078	70	158	1.64691	110	230	0.47256
-9	16	58.7079	31	88	7.62411	71	160	1.59068	111	232	0.45957
-8	18	56.3694	32	90	7.29464	72	162	1.53668	112	234	0.44699
-7	19	52.2438	33	91	6.98142	73	163	1.48481	113	235	0.43482
-6	21	49.3161	34	93	6.68355	74	165	1.43498	114	237	0.42304
-5	23	46.5725	35	95	6.40021	75	167	1.38703	115	239	0.41164
-4	25	44	36	97	6.13059	76	169	1.34105	116	241	0.4006
-3	27	41.5878	37	99	5.87359	77	171	1.29078	117	243	0.38991
-2	28	39.8239	38	100	5.62961	78	172	1.25423	118	244	0.37956
-1	30	37.1988	39	102	5.39689	79	174	1.2133	119	246	0.36954
0	32	35.2024	40	104	5.17519	80	176	1.17393	120	248	0.35982
1	34	33.3269	41	106	4.96392	81	178	1.13604	121	250	0.35042
2	36	31.5635	42	108	4.76253	82	180	1.09958	122	252	0.3413
3	37	29.9058	43	109	4.5705	83	181	1.06448	123	253	0.33246
4	39	28.3459	44	111	4.38736	84	183	1.03069	124	255	0.3239
5	41	26.8778	45	113	4.21263	85	185	0.99815	125	257	0.31559
6	43	25.4954	46	115	4.04589	86	187	0.96681	126	259	0.30754
7	45	24.1932	47	117	3.88673	87	189	0.93662	127	261	0.29974
8	46	22.5662	48	118	3.73476	88	190	0.90753	128	262	0.29216
9	48	21.8094	49	120	3.58962	89	192	0.8795	129	264	0.28482
10	50	20.7184	50	122	3.45097	90	194	0.85248	130	266	0.2777
11	52	19.6891	51	124	3.31847	91	196	0.82643	131	268	0.27078
12	54	18.7177	52	126	3.19183	92	198	0.80132	132	270	0.26408
13	55	17.8005	53	127	3.07075	93	199	0.77709	133	271	0.25757
14	57	16.9341	54	129	2.95896	94	201	0.75373	134	273	0.25125
15	59	16.1156	55	131	2.84421	95	203	0.73119	135	275	0.24512
16	61	15.3418	56	133	2.73823	96	205	0.70944	136	277	0.23916
17	63	14.6181	57	135	2.63682	97	207	0.68844	137	279	0.23338
18	64	13.918	58	136	2.53973	98	208	0.66818	138	280	0.22776
19	66	13.2631	59	138	2.44677	99	210	0.64862	139	282	0.22231

© 2025 Carrier. All rights reserved.

Manufacturer reserves the right to change, at any time, specifications and designs without notice and without obligations.

System Pressure Table-R454B

Pressure			Temperature		Pressure			Temperature	
Kpa	bar	PSI	°C	°F	Kpa	bar	PSI	°C	°F
58.196	0.58	8.44	-60	-76	935.23	9.35	135.64	8	46.4
61.517	0.62	8.92	-59	-74.2	963.75	9.64	139.78	9	48.2
64.988	0.65	9.43	-58	-72.4	992.93	9.93	144.01	10	50
68.615	0.69	9.95	-57	-70.6	1022.8	10.23	148.34	11	51.8
72.402	0.72	10.50	-56	-68.8	1053.3	10.53	152.76	12	53.6
76.354	0.76	11.07	-55	-67	1084.5	10.85	157.29	13	55.4
80.478	0.80	11.67	-54	-65.2	1116.4	11.16	161.91	14	57.2
84.776	0.85	12.30	-53	-63.4	1149	11.49	166.64	15	59
89.256	0.89	12.95	-52	-61.6	1182.3	11.82	171.47	16	60.8
93.923	0.94	13.62	-51	-59.8	1216.3	12.16	176.40	17	62.6
98.781	0.99	14.33	-50	-58	1251.1	12.51	181.45	18	64.4
103.84	1.04	15.06	-49	-56.2	1286.6	12.87	186.60	19	66.2
109.1	1.09	15.82	-48	-54.4	1322.8	13.23	191.85	20	68
114.56	1.15	16.61	-47	-52.6	1359.9	13.60	197.23	21	69.8
120.25	1.20	17.44	-46	-50.8	1397.7	13.98	202.71	22	71.6
126.15	1.26	18.30	-45	-49	1436.3	14.36	208.31	23	73.4
132.28	1.32	19.18	-44	-47.2	1475.7	14.76	214.02	24	75.2
138.64	1.39	20.11	-43	-45.4	1515.9	15.16	219.85	25	77
145.24	1.45	21.06	-42	-43.6	1557	15.57	225.82	26	78.8
152.09	1.52	22.06	-41	-41.8	1598.9	15.99	231.89	27	80.6
159.18	1.59	23.09	-40	-40	1641.6	16.42	238.09	28	82.4
166.54	1.67	24.15	-39	-38.2	1685.2	16.85	244.41	29	84.2
174.15	1.74	25.26	-38	-36.4	1729.7	17.30	250.86	30	86
182.04	1.82	26.40	-37	-34.6	1775	17.75	257.43	31	87.8
190.2	1.90	27.59	-36	-32.8	1821.3	18.21	264.15	32	89.6
198.65	1.99	28.81	-35	-31	1868.4	18.68	270.98	33	91.4
207.39	2.07	30.08	-34	-29.2	1916.5	19.17	277.95	34	93.2
216.42	2.16	31.39	-33	-27.4	1965.6	19.66	285.08	35	95
225.76	2.26	32.74	-32	-25.6	2015.5	20.16	292.31	36	96.8
235.41	2.35	34.14	-31	-23.8	2066.5	20.67	299.71	37	98.6
245.37	2.45	35.59	-30	-22	2118.4	21.18	307.24	38	100.4
255.67	2.56	37.08	-29	-20.2	2171.3	21.71	314.91	39	102.2
266.29	2.66	38.62	-28	-18.4	2225.2	22.25	322.73	40	104
277.25	2.77	40.21	-27	-16.6	2280.2	22.80	330.70	41	105.8
288.56	2.89	41.85	-26	-14.8	2336.1	23.36	338.81	42	107.6
300.22	3.00	43.54	-25	-13	2393.2	23.93	347.09	43	109.4
312.24	3.12	45.28	-24	-11.2	2451.3	24.51	355.52	44	111.2
324.63	3.25	47.08	-23	-9.4	2510.4	25.10	364.09	45	113
337.39	3.37	48.93	-22	-7.6	2570.7	25.71	372.84	46	114.8
350.54	3.51	50.84	-21	-5.8	2632.1	26.32	381.74	47	116.6
364.08	3.64	52.80	-20	-4	2694.7	26.95	390.82	48	118.4
378.02	3.78	54.83	-19	-2.2	2758.3	27.58	400.04	49	120.2
392.37	3.92	56.91	-18	-0.4	2823.2	28.23	409.46	50	122
407.13	4.07	59.05	-17	1.4	2889.3	28.89	419.04	51	123.8

Manufacturer reserves the right to change, at any time, specifications and designs without notice and without obligations.

System Pressure Table-R454B (Continued)

Pressure			Temperature		Pressure			Temperature	
Kpa	bar	PSI	°C	°F	Kpa	bar	PSI	°C	°F
422.31	4.22	61.25	-16	3.2	2956.5	29.57	428.79	52	125.6
437.92	4.38	63.51	-15	5	3025	30.25	438.72	53	127.4
453.98	4.54	65.84	-14	6.8	3094.7	30.95	448.83	54	129.2
470.47	4.70	68.23	-13	8.6	3165.7	31.66	459.13	55	131
487.43	4.87	70.69	-12	10.4	3238.1	32.38	469.63	56	132.8
504.84	5.05	73.22	-11	12.2	3311.7	33.12	480.30	57	134.6
522.73	5.23	75.81	-10	14	3386.7	33.87	491.18	58	136.4
541.1	5.41	78.48	-9	15.8	3463	34.63	502.25	59	138.2
559.95	5.60	81.21	-8	17.6	3540.7	35.41	513.52	60	140
579.31	5.79	84.02	-7	19.4	3619.9	36.20	525.00	61	141.8
599.16	5.99	86.90	-6	21.2	3700.5	37.01	536.69	62	143.6
619.54	6.20	89.85	-5	23	3782.7	37.83	548.61	63	145.4
640.43	6.40	92.88	-4	24.8	3866.3	38.66	560.74	64	147.2
661.86	6.62	95.99	-3	26.6	3951.5	39.52	573.10	65	149
683.82	6.84	99.18	-2	28.4	4038.3	40.38	585.69	66	150.8
706.34	7.06	102.44	-1	30.2	4126.8	41.27	598.52	67	152.6
729.41	7.29	105.79	0	32	4217	42.17	611.60	68	154.4
753.06	7.53	109.22	1	33.8	4309	43.09	624.95	69	156.2
777.28	7.77	112.73	2	35.6	4402.9	44.03	638.56	70	158
802.08	8.02	116.33	3	37.4	4498.7	44.99	652.46	71	159.8
827.48	8.27	120.01	4	39.2	4596.5	45.97	666.64	72	161.6
853.49	8.53	123.78	5	41	4696.5	46.97	681.15	73	163.4
880.11	8.80	127.64	6	42.8	4798.9	47.99	696.00	74	165.2
907.35	9.07	131.60	7	44.6	4904.1	49.04	711.25	75	167

© 2025 Carrier. All rights reserved.

Manufacturer reserves the right to change, at any time, specifications and designs without notice and without obligations.