40QNC / 38HDF
40QNQ / 38QRF
High–Wall Duct Free Split System
Sizes 018 to 036

Carrier
turn to the experts

Installation Instructions

40QNC, QNQ Unit

NOTE: Read the entire instruction manual before starting the installation.

⚠ WARNING

UNIT OPERATION AND SAFETY HAZARD

Failure to follow this warning could result in personal injury or equipment damage.

Puron refrigerant systems operate at higher pressures than standard R-22 systems. To avoid damage to the unit or possible personal injury, do not use R-22 service equipment or components on Puron refrigerant equipment.

SAFETY CONSIDERATIONS

Improper installation, adjustment, alteration, service, maintenance, or use can cause explosion, fire, electrical shock, or other conditions which may cause death, personal injury, or property damage. Consult a qualified installer, service agency, or your distributor or branch for information or assistance. The qualified installer or agency must use factory-authorized kits or accessories when modifying this product. Refer to the individual instructions packaged with the kits or accessories when installing.

Follow all safety codes. Wear safety glasses, protective clothing, and work gloves. Use quenching cloth for brazing operations. Have fire extinguisher available. Read these instructions thoroughly and follow all warnings or cautions included in literature and attached to the unit. Consult local building codes and current editions of the National Electrical Code (NEC) NFPA 70. In Canada, refer to current editions of the Canadian electrical code CSA 22.1.

Recognize safety information. This is the safety-alert symbol ⚠ When you see this symbol on the unit and in instructions or manuals, be alert to the potential for personal injury. Understand these signal words; DANGER, WARNING, and CAUTION. These words are used with the safety-alert symbol. DANGER identifies the most serious hazards which **will** result in severe personal injury or death. WARNING signifies hazards which **could** result in personal injury or death. CAUTION is used to identify unsafe practices which **would** result in minor personal injury or product and property damage. NOTE is used to highlight suggestions which **will** result in enhanced installation, reliability, or operation.

⚠ WARNING

ELECTRICAL SHOCK HAZARD

Failure to follow this warning could result in personal injury or death.

Before installing, modifying, or servicing system, main electrical disconnect switch must be in the OFF position. There may be more than 1 disconnect switch. Lock out and tag switch with a suitable warning label.

⚠ CAUTION

PERSONAL INJURY AND EQUIPMENT DAMAGE HAZARD

Failure to follow this caution may result in personal injury and / or equipment damage.

DO NOT operate the unit without a filter or with grille removed.

DIMENSIONS - INDOOR

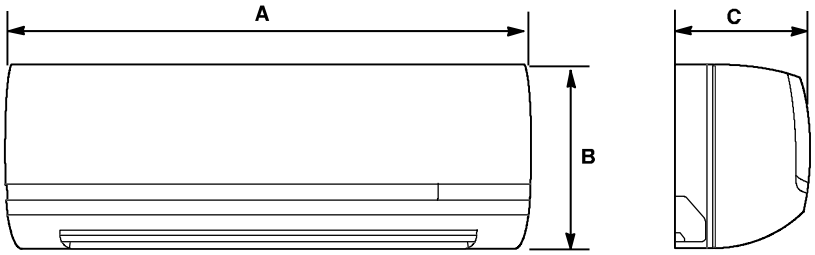

A08433

Model Size	W In. (mm)	H In. (mm)	D In. (mm)	Operating Weight lb (kg)
18k	42.5 (1080)	11.6 (295)	7.9 (201)	31 (14.1)
24k	42.5 (1080)	11.6 (295)	7.9 (201)	31 (14.1)
30k	57.5 (1461)	13.4 (340)	9.5 (241)	51 (23.2)
36k	57.5 (1461)	13.4 (340)	9.5 (241)	51 (23.2)

Fig. 1 - 40QNC,QNQ Unit Dimensions

DIMENSIONS - OUTDOOR

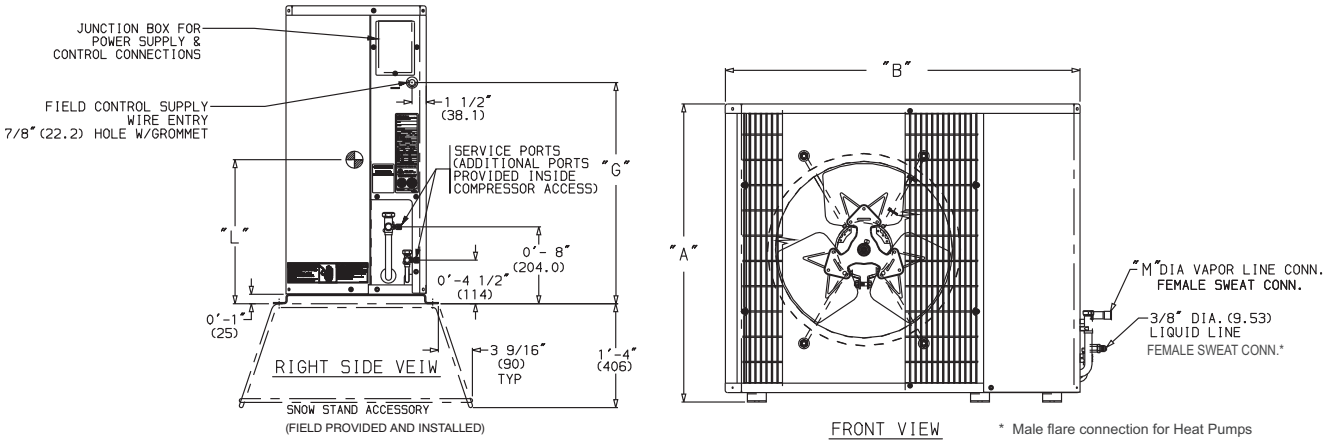

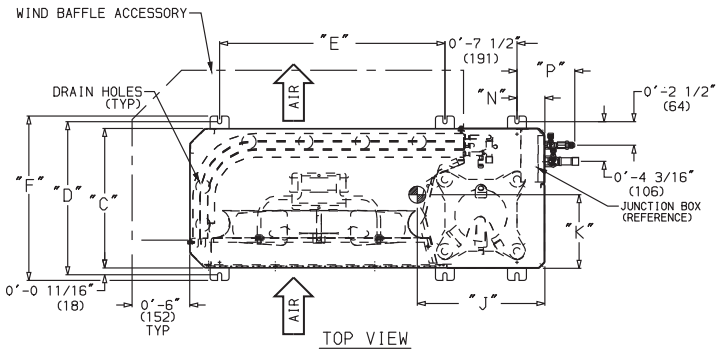

UNIT SIZE		M		OPERATING WT	
		in.	mm	lb	kg
38HDF	018	5/8	15.88	166	75.3
	024	5/8	15.88	176	79.8
	030	3/4	19.05	187	84.8
	036	3/4	19.05	250	113.4
38QRF	018	5/8	15.88	166	75.3
	024	5/8	15.88	176	79.8
	030	3/4	19.05	187	84.8
	036	3/4	19.05	232	105.2

UNIT MODELS		CHASSIS SIZE (Reference)	A	B	C	D	E	F	G	H	J	K	L	N	P
38HDF Unit Size	38QRF Unit Size														
018	018	0	2'-1 1/8" (638.2)	3'-0 15/16" (938.2)	1'-2 9/16" (369.9)	1'-4" (406.4)	1'-11 7/16" (595.3)	1'-5 3/16" (436.6)	1'-5 1/8" (435)	1'-10" (559.1)	1'-1" (330.2)	0'-6 5/8" (168.3)	0'-11 1/4" (285.8)	0'-2 15/16" (75)	0'-6" (152.4)
024,030	024	0.6	2'-7 1/8" (790.6)	3'-0 15/16" (938.2)	1'-2 9/16" (369.9)	1'-4" (406.4)	1'-11 7/16" (595.3)	1'-5 3/16" (436.6)	1'-11 1/8" (587.4)	2'-4" (711.5)	1'-2" (355.6)	0'-6 3/4" (171.5)	0'-11 5/8" (295.3)	0'-2 15/16" (75)	0'-6" (152.4)
036	030,036	1.0	3'-1 3/16" (944.6)	3'-8 9/16" (1131.9)	1'-5 1/16" (433.4)	1'-6 7/16" (468.3)	2'-6 1/2" (774.7)	1'-7 5/8" (498.5)	2'-5 3/16" (741)	2'-10 1/16" (865.5)	1'-1 11/16" (347.7)	0'-8 1/8" (206.4)	1'-3 7/8" (403.2)	0'-3 7/16" (88)	0'-6 1/2" (165.4)

NOTE: Dimensions shown in feet-inches. Dimensions in ( ) are millimeters.

A08434

Fig. 2 - 38HDF, QRF Unit Dimensions

CLEARANCES - INDOOR

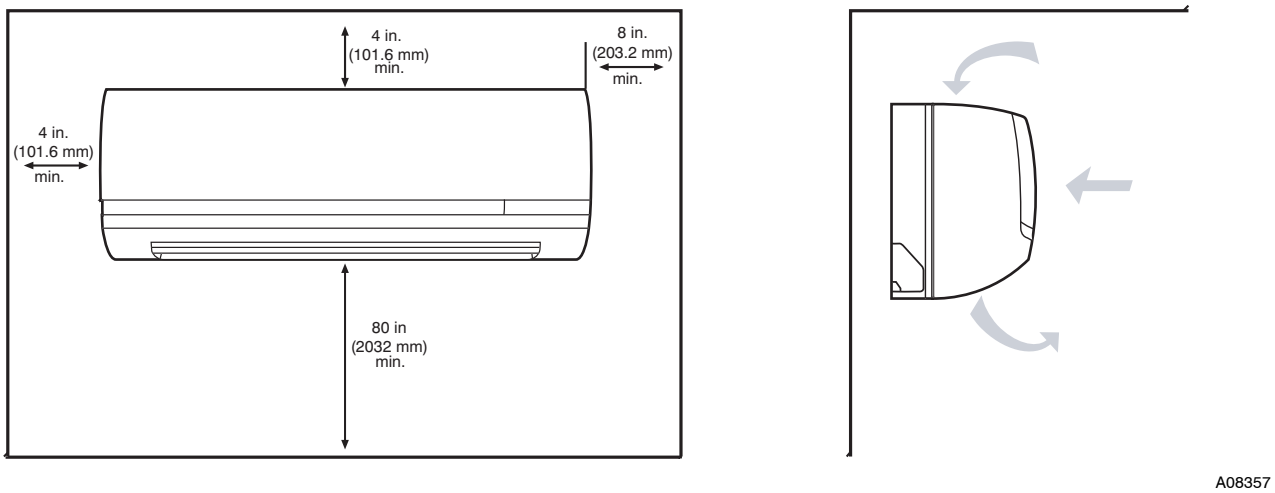

Fig. 3 - 40QNC,QNQ Unit Clearances

CLEARANCES - OUTDOOR

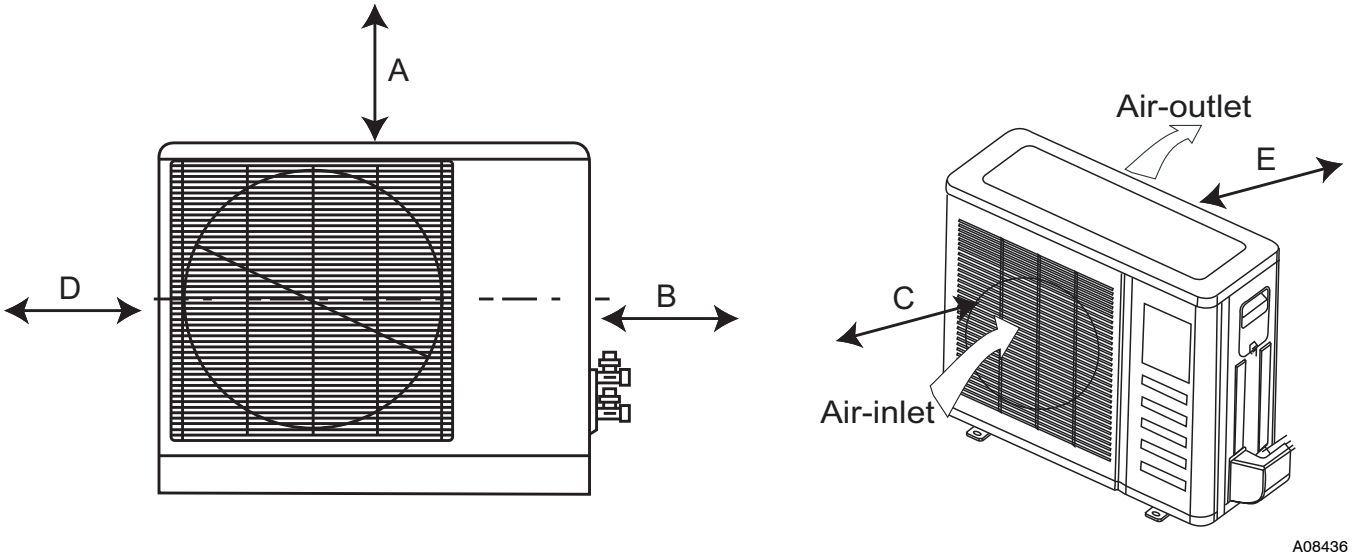

UNIT	Coil Facing Wall – in. (mm)	Fan Facing Wall – in. (mm)
A	24 (610)	24 (610)
B	36 (914)	36 (914)
C	36 (914)	8 (203)
D	6 (152)	8 (203)
E	6 (152)	36 (914)

Fig. 4 - Outdoor Unit Clearance

These installation instructions cover the installation of the matched systems listed in table 2.

Parts List

Indoor Unit

The following items are included with the indoor unit:

Table 1 – Installation Materials

Description	Qty	Usage
Wall Mounting Bracket	1	For Indoor Unit Installation
Screws, 4XL10	2	For Attaching The Remote Control Holder To The Wall
Screws, 5XL25	5/14*	For Attaching The Mounting Bracket To The Wall
Remote Control	1	For Controlling Unit
Remote Control Holder	1	Holder For Remote Control

* 5 screws for unit sizes 18 and 24. 14 screws for unit sizes 30 and 36.

Outdoor Unit

The following items are included with the outdoor unit:

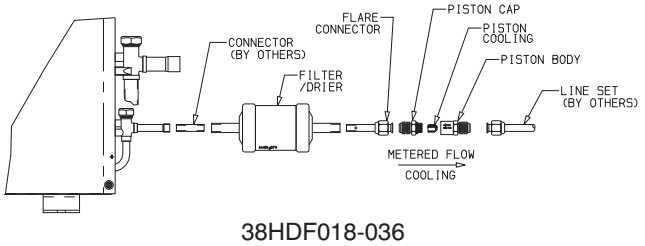

Fig. 5 - 38HDF018-036

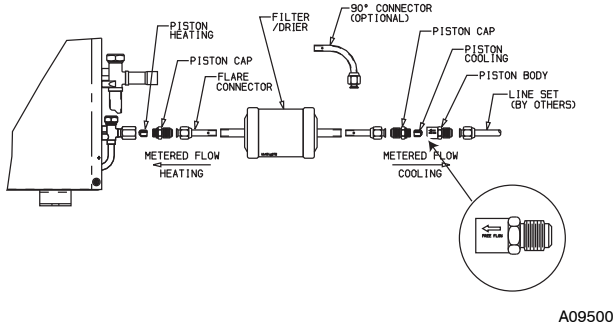

Fig. 6 - 38QRF018-036

Model	Filter Drier	Piston Cap	Pistons*	Flare Connector
38HDF	✓	✓	✓	✓
38QRF	✓	✓ (qty 2)	✓	✓ (qty 3)

* Multiple pistons. Quantity varies with size.

Table 2 – Matched Systems

System Type	Nominal Capacity	Outdoor Unit	Indoor Unit
Cooling Only	018	38HDF018–––3	40QNC018024–––3
	024	38HDF024–––3	40QNC018024–––3
	030	38HDF030–––3	40QNC030–––3
	036	38HDF036–––3/5/6	40QNC036–––3
Heat Pump	018	38QRF018–––3	40QNQ018–––3
	024	38QRF024–––3	40QNQ024–––3
	030	38QRF030–––3	40QNQ030–––3
	036	38QRF036–––3/5/6	40QNQ036–––3

SYSTEM REQUIREMENTS

Clearances

Allow sufficient space around the indoor and outdoor unit for proper airflow circulation and servicing. Refer to Fig. 3 and Fig. 4 for minimum required clearances.

Piping: Piping and insulation is field supplied.

Piping Lengths

The minimum length between the indoor and outdoor units is 10 ft (3 m). Refer to table 3 for the maximum lengths allowed.

Table 3 – Maximum Refrigerant Line Lengths

Unit Size	Max Line Length ft(m)	Max Elevation (ID over OD) ft(m)	Max Elevation (OD over OD) ft(m)
18K	200 (61)	65 (19.8)	200 (61)
24K	200 (61)	65 (19.8)	200 (61)
30K	200 (61)	65 (19.8)	200 (61)
36K	200 (61)	65 (19.8)	200 (61)

Note: For lengths greater than 25 ft (7.6 m), refer to the *Duct Free Long Line Guide*.

Pipe Sizes

Refer to table 4 for pipe sizes.

Table 4 – Pipe Sizes

Pipe Sizes (in)		
Unit Size	Mix Phase – in	Vapor – in
18K	3/8	5/8
24K	3/8	5/8
30K	3/8	3/4
36K	3/8	3/4

Note: Both lines need to be insulated using at least 1/2 inch closed foam insulation.

Condensate Drain Pipe Sizes

Refer to table 5 for the required sizes.

Table 5 – Drain Pipe Sizes

Unit Size	Outside Diameter – in	Inside Diameter – in
18K	5/8	7/16
24K	5/8	7/16
30K	3/4	5/9
36K	3/4	5/9

Note: Do not trap condensate pipe.

Refrigerant Charge

The 38HDF and 38QRF units can be matched with multiple outdoor units and thus additional charge might be required when matched with the 40QNC or 40QNQ units.

Table 6 – Additional Charge

Additional Charge lb (kg)		
Unit Size	**38HDF**	**38QRF**
018	1.2 (0.55)	0.8 (0.36)
024	1.0 (0.45)	0.5 (0.23)
030	2.4 (1.1)	0
036	0	0

Note:The above additional charge is required amount for line lengths up to 25 ft (7.6 m). For line lengths exceeding 25 ft (7.6 m), additional charge will be required. Refer to the *Duct Free Splits Long Line Guide*.

Metering Device

The metering device(s) for these systems is a type B Accurator installed with the outdoor unit. One Accurator is required for the cooling only system and two are required for the heat pump systems. The Accurators are supplied with the outdoor unit. However, since the same outdoor unit can be matched with multiple indoor units, the correct Accurator must be selected. Refer to Table 7 for the correct Accurator size.

Table 7 – Accurator Sizes

System Type	Size	Cooling Accurator	Heating Accurator
Cooling Only	018	49	–
	024	55	–
	030	63	–
	036	70	–
Heat Pumps	018	49	45
	024	55	49
	030	63	53
	036	70	63

Power and Connecting Cables - Field Supplied

Power:

- The indoor and outdoor units require a dedicated power supply.
- Consult local building codes, NEC (National Electric Code) or CEC (Canadian Electric Code) for any special requirements.
- Use Table 8 for the electrical requirements for the outdoor units and Table 9 for the indoor units to correctly size the cables and disconnect switches.

Table 8 – 38HDF / QRF Electrical Requirements

Unit Size	Voltage	38HDF	38QRF
		Min Ckt Amps/ Fuse HACR Bkr Amps	Min Ckt Amps/ Fuse HACR Bkr Amps
018	208/230–1–60	12.1/20	12.1/20
024	208/230–1–60	16.8/25	16.8/25
030	208/230–1–60	18.4/30	18.4/30
036	208/230–1–60	23.8/40	23.8/40
036	208/230–3–60	18.0/30	18.0/30
036	460–3–60	8.3/15	8.3/15

Table 9 – 40QNC / QNQ Electrical Requirements

Unit Size	Voltage	40QNC	40QNQ
		Min Ckt Amps/ Fuse HACR Bkr Amps	Min Ckt Amps/ Fuse HACR Bkr Amps
018	208/230–1–60	0.48/15	0.48/15
024	208/230–1–60	0.48/15	0.48/15
030	208/230–1–60	0.48/15	0.48/15
036	208/230–1–60	0.55/15	0.55/15

Control Wiring

Thermostat wires should be used for control wiring between the indoor and outdoor units. A two conductor cable is required for the cooling only units and a seven conductor cable is required on heat pumps. 18 AWG is recommended for any length up to 50 ft (15.2 m). 16 AWG is recommended for lengths between 50 and 200 ft (15.2 and 61.0 m).

User Interface

The indoor unit is supplied with a wireless remote control. The following accessories are also available

- Wall mounted control. Up to 6 units can be daisy chained and controlled by one wired control.
- Zone manager capable of controlling up to 32 units divided up to 8 different zones.

Operating Range

Ensure that the system operates within the application guidelines shown in Table 10.

Cooling Operating Range

	Maximum		Minimum	
	DB °F (°C)	WB °F (°C)	DB °F (°C)	WB °F (°C)
Outdoor Unit	125 (51.7)	– –	55 (12.8)	– –
Indoor Unit	90 (32.2)	74 (23.3)	62 (17.0)	56 (13)

Heating Operating Range

	Maximum		Minimum	
	DB °F (°C)	WB °F (°C)	DB °F (°C)	WB °F (°C)
Outdoor Unit	75 (23.9)	67 (19.4)	17 (–8.3)	– –
Indoor Unit	81 (27.2)	– –	62 (17.0)	– –

Accessories

An extensive list of field installed accessories is available for both indoor and outdoor units. Identify what accessories, if any, are required for the application at hand and consult the separate installation instructions for the accessories. Some of the accessories, especially on the indoor units, can be installed much easier if planned ahead.

INSTALLATION

Complete Pre-installation Checks

1. **Unpack Unit** - Store the indoor and outdoor units in the original packaging until it is moved to the final site for installation.
2. **Inspect Shipment** - Upon receipt of shipment, check the indoor and outdoor units for damage. If there is any damage, forward claim papers directly to the transportation company. Manufacturer is not responsible for damage incurred in transit.
3. **Inspect Parts Supplied With Units** – Check all items against parts list (see Table 1). If any items are missing, notify your distributor or Carrier office. To prevent loss or damage, leave all parts in original packages until installation.

Consider System Requirements

1. Consult local building codes and NEC for special installation requirements.
2. When deciding the location of the indoor and outdoor units, ensure that the piping run does not exceed the allowed distances listed in Table 3.
3. Make sure the indoor and outdoor units are easily accessible to electrical power.
4. Allow sufficient clearances for airflow, wiring, refrigerant piping, and servicing the unit. See Fig. 3 and Fig. 4.
5. Condensate piping can be directed through the inside wall to an approved drain or straight outside.

INSTALL INDOOR UNIT

Plan the installation carefully before you begin.

1. Select indoor unit location.
   a. A location that can bear the weight of the unit.
   b. Do not install indoor units near a direct source of heat such as direct sunlight or a heating appliance.
   c. Do not install units too close to humid conditions.
2. Install Mounting Plate
   The factory supplied mounting plate will look like one of the following depending on the size of the unit.

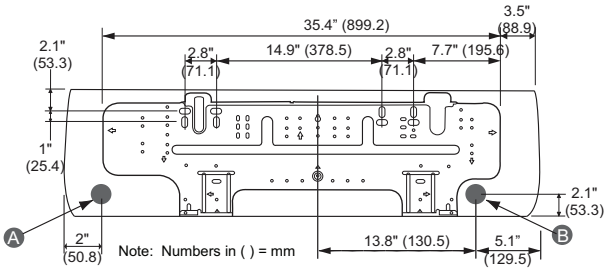

A09046

Fig. 7 - 40QNC, QNQ018,024 Mounting Plate

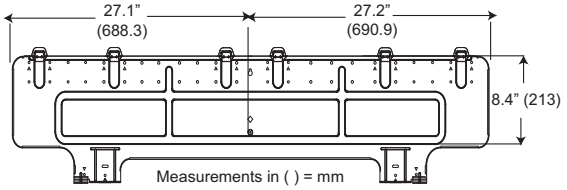

A09047

Fig. 8 - 40QNC, QNQ030, 036 Mounting Plate

Before mounting the 40QNC, QNQ unit on the wall mounting bracket, consider how the refrigerant piping will be routed.

Complete the following when installing the wall mounting bracket:

a. Carefully remove the mounting plate which is attached to the back of the unit by removing any screws and pushing at the indicated pressure points at the bottom of the unit.

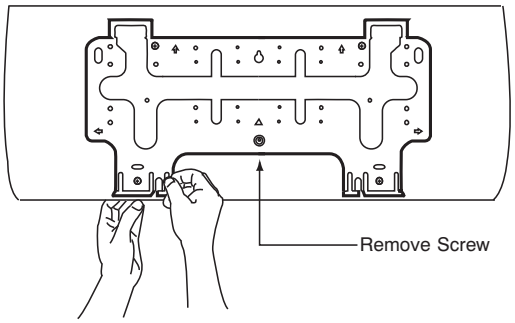

A09048

Fig. 9 - Mounting Plate Screw Location

b. The mounting plate should be located horizontally and level on the wall. All minimum spacing shown below should be maintained.

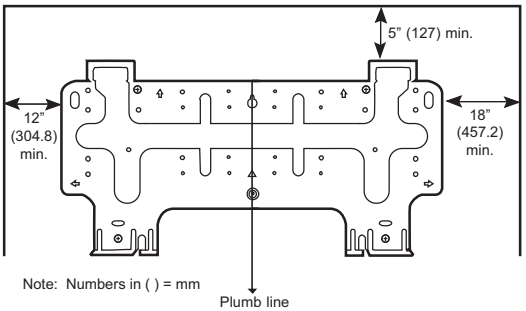

A09049

Fig. 10 - Minimum Spacing

c. Install the wall mounting bracket in a location that is strong enough to withstand the weight of the unit.
d. If the wall is block, brick, concrete or similar material, drill 0.2 in (5 mm) diameter holes and insert anchors for the appropriate mounting screws.
e. Fasten the wall hanging bracket to the wall with 4 or more screw anchors through the holes near the outer edge of the bracket.
f. Install the wall hanging bracket flush to the wall, and ensure the bracket does not move.

3. Drill hole in wall for interconnecting piping, drain, and wiring

Refrigerant Line Routing

Piping for indoor units can be routed as shown in Fig. 11.

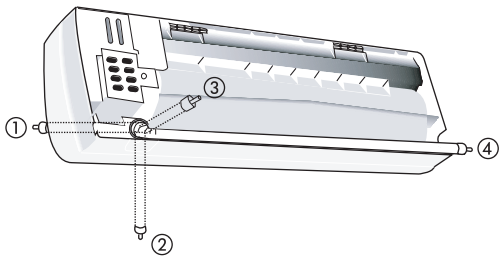

A08358A

Fig. 11 - Refrigerant Line Routing

Rear Piping

Determine the pipe hole position using the mounting plate as a template. Drill a 2-1/2 inch (63.5 mm) diameter hole in the wall at

point A or B as shown in Fig. 12 or Fig. 13. Drill the hole at a slope so that the outside end is 1/2 inch (13 mm) lower than inside end to ensure optimal drainage. Refer to Fig. 14.

Side Or Bottom Piping

Remove the knockout in the unit and drill a 2-1/2 inch (63.5 mm) hole where the pipe penetrates the structure using the guides given above.

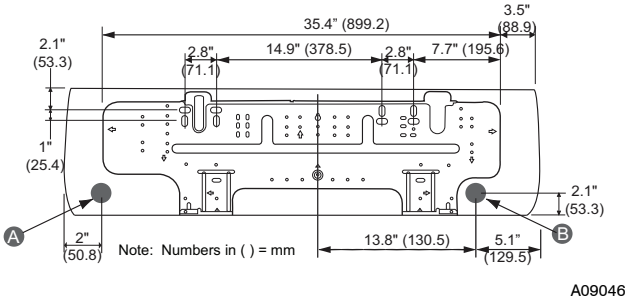

Fig. 12 - 40QNC, QNQ018, 024 Mounting Plate

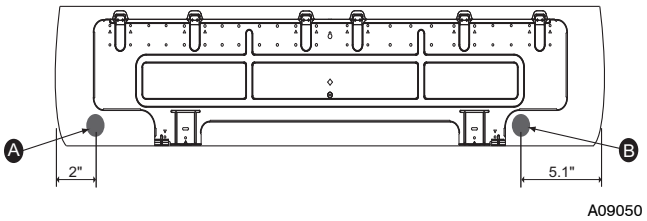

Fig. 13 - 40QNC, QNQ030, 036 Mounting Plate

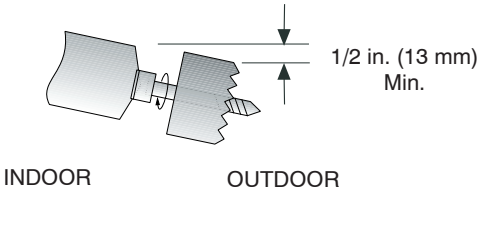

Fig. 14 - Drill Hole at Slope

4. Relocate drain connection if necessary - Determine if the installation requires a left or a right hand drain exit and relocate the drain hose if necessary as shown in Fig. 15.

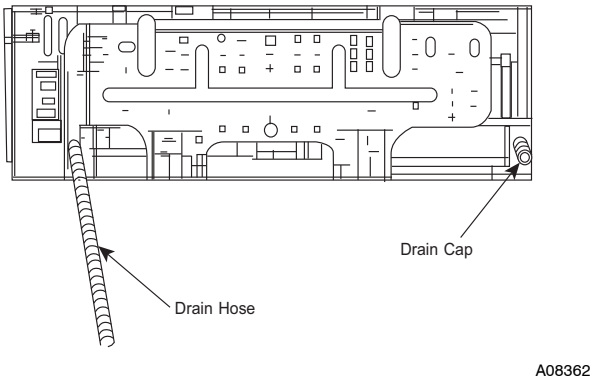

Fig. 15 - Drain Hose and Cap Location

NOTE: If the condensate pump accessory is to be used, the drain hose can be cut to provide space for the space for the condensate pump reservoir in the back of the unit. The reservoir must be installed at this time. Please refer to installation instructions provided with the condensate pump accessory.

5. Place unit on a clean surface until you are ready to connect the piping and wiring.

INSTALL OUTDOOR UNIT

The outdoor units can be installed on the ground, on the roof, or mounted on a wall.

NOTE: Install the unit so that the coil does not face into prevailing winds. If this is not possible and constant wind winds above 25 mph are expected, use accessory wind baffle. See installation instructions provided with accessory kit. Wind baffles should also be used on all units with accessory low ambient temperature control.

Mounting on Ground

1. Mount unit on a solid level concrete pad.
2. If a heat pump is being installed, use a field- provided snow stand or ice rack where prolonged subfreezing temperatures or heavy snow occurs.
3. Position unit so water or ice from roof does not fall directly onto unit.
4. On cooling only units, an accessory stacking kit can be used when units are to be stacked. See installation instructions provided with the accessory kit.

Mounting on Roof

⚠ CAUTION

PERSONAL INJURY AND/OR EQUIPMENT DAMAGE HAZARD

Failure to follow this caution may result in personal injury and / or equipment damage.
Be sure unit panels are securely in place prior to rigging.

1. Rig the unit. Keep the unit upright and lift using a sling. Use cardboard or padding under the sling, and spreader bars to prevent sling damage to the unit. See Fig 16. See Fig. 2 for center of gravity reference
2. Mount unit on a solid concrete pad or platform.
3. Isolate unit and piping from structure
4. If a heat pump is being installed, use a field- provided snow stand or ice rack where prolonged subfreezing temperatures or heavy snow occurs.
5. On cooling only units, an accessory stacking kit can be used when units are to be stacked. See installation instructions provided with accessory kit.

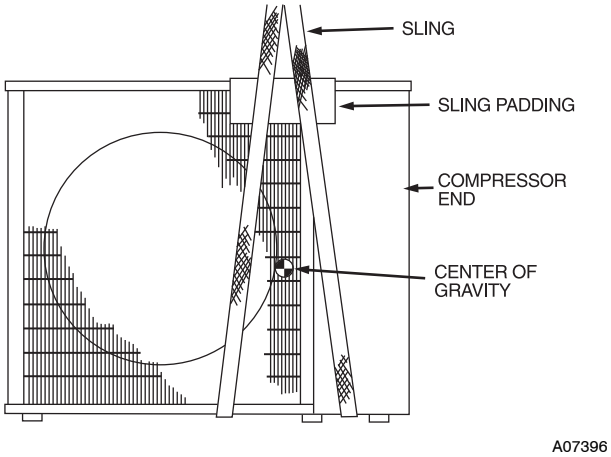

Fig. 16 - Lifting Unit with Sling

Mounting Unit on Wall

The units can also be mounted on the wall using the accessory mounting kit.

Complete Outdoor Refrigerant Piping Connections

Follow the following general guidelines:

1. Use refrigerant grade field – supplied tubing. Refer to Table 4 for the correct line sizes.
2. Do not use less than 10 ft (93.05 m) of interconnecting tubing.

⚠ CAUTION

UNIT DAMAGE HAZARD

Failure to follow this caution may result in equipment damage or improper operation.

If any section of pipe is buried, there must be a 6 in. (152.4 mm) vertical rise to the valve connections on the outdoor unit. If more than the recommended length is buried, refrigerant may migrate to cooler, buried section during extended periods of system shutdown. This causes refrigerant slugging and could possibly damage the compressor at start-up.

When more than 80 ft (24.4 m) of interconnecting tubing is used, consult the Duct-Free Split System Long Line Application Guide for required accessories.

3. Insulate both lines. A minimum of 1/2 inch foam pipe insulation is recommended.
4. Run the refrigerant tubes as directly as possible and avoid unnecessary turns and bends.
5. Suspend refrigerant tubes to avoid damage to insulation or tubes so they do not transmit vibration to the structure.
6. When passing refrigerant tubes through the wall, seal the opening so rain and insects do not enter the structure. Leave some slack in refrigerant tubes between structure and outdoor unit to absorb vibration.

NOTE: A fusible plug is located in unit suction line; do not cap this plug. If local codes require additional safety devices, install as directed.

Connection at Outdoor Unit

⚠ CAUTION

UNIT DAMAGE HAZARD

Failure to follow this caution may result in equipment damage or improper operation.

To prevent damage to unit or service valves observe the following:

- A brazing shield **MUST** be used.
- Wrap service valves with wet cloth or use a heat sink material.

38HDF Units:

1. Assemble the connector tube to the factory supplied filter drier by:
   a. Braze the field supplied connector to the inlet of the filter drier (see Fig. 17)
   b. Braze the factory supplied flare connector to the outlet end of the filter drier (see Fig.17)

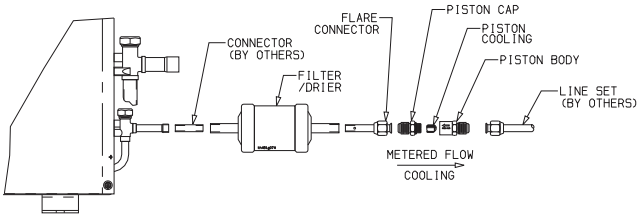

A09499

Fig. 17 - 38HDF018-036 Connector Tube Assembly

2. Assemble the Accurator body (see Fig. 18) using the correct factory supplied piston (refer to Table 7) .

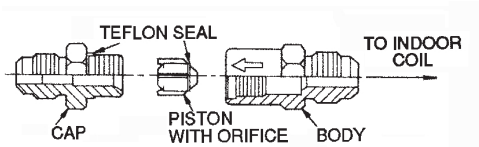

NOTE: Arrow on AccuRater body points in free flow direction, away from the indoor coil.

A09501

Fig. 18 - AccuRater (bypass type) Metering Device Components

3. Attach the complete Accurator assembly to the flare connection end of the filter drier
4. Braze the completed filter drier/Accurator assembly to the liquid service valve.
5. Connect the field supplied line set to the filter drier/Accurator assembly and the suction valve. A sweat connection is required at the suction valve and flare connection is required for the mixed phase line.
6. Insulate any exposed areas between the line set and the liquid valve.

38QRF Units

1. Assemble the connector tubes to the factory supplied filter drier by brazing the factory supplied flare connectors to the inlet and outlet for the filter drier (see Fig. 19)

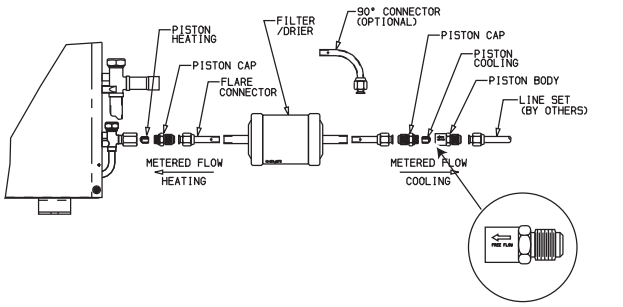

Fig. 19 - 38QRF018-036 Connector Tube Assembly

2. Perform step 2 and 3 from the 38HDF section.
3. Remove the plastic cap from the liquid and suction service valve on the 38QRF unit and assemble the heating piston and piston cap supplied with the outdoor unit as shown in Fig. 20.

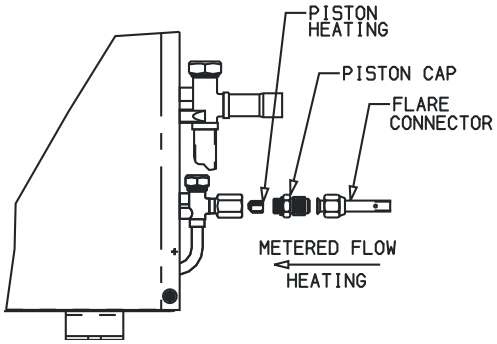

Fig. 20 - AccuRater (bypass type) Metering Device Components

NOTE: The Teflon seal on the piston should point towards the liquid service valve. The size of the factory supplied piston might have to be adjusted for long line applications (over 80 ft / 24.4 m). Refer to the Duct Free Long Line Application Guide for additional information.

4. Attach the flare end of the filter drier assembly to the piston cap (see Fig. 20).
5. Connect the field supplied line set to the filter drier assembly and to the suction valve.
6. Insulate any exposed areas between filter drier and liquid valve.

Complete Outdoor Power and Control Wiring

⚠ WARNING

ELECTRICAL SHOCK HAZARD

Failure to follow this warning could result in personal injury or death.

The unit cabinet must have an uninterrupted or unbroken ground to minimize personal injury if an electrical fault should occur. The ground may consist of electrical wire or metal conduit when installed in accordance with existing electrical codes.

⚠ CAUTION

UNIT DAMAGE HAZARD

Failure to follow this caution may result in equipment damage or improper operation.

Unit failure as a result of operation on improper line voltage or excessive phase imbalance constitutes abuse and may cause damage to electrical components. Such operation could void any applicable Carrier warranty.

⚠ WARNING

ELECTRICAL SHOCK HAZARD

Failure to follow this warning could result in personal injury or death.

Before performing service or maintenance, be sure indoor unit main power switch is turned OFF and indoor blower has stopped.

Lock out and tag switch with a suitable warning label.

Power Wiring

1. Mount outdoor power disconnect. The unit is factory wired for the voltage shown on the unit nameplate. The fused disconnect switch must be provided within sight of the unit, readily accessible, but out of reach of children. Provisions for locking the disconnect switch on the OFF (open) position is advisable. The disconnect switch must comply with NEC and local codes. Protect the unit and wiring using only the recommended fuse/circuit breaker size. See Table 10..
2. Run power wiring from main box to disconnect per NEC and local codes.
3. Run power wiring from the disconnect switch to outdoor unit. Use only minimum 60°C copper conductors between the disconnect switch and the unit for field power connection.
4. Route the field power wires through the conduit connection opening in the unit side panel and connect in junction box as shown in Fig 21. The unit and power wiring must be grounded.

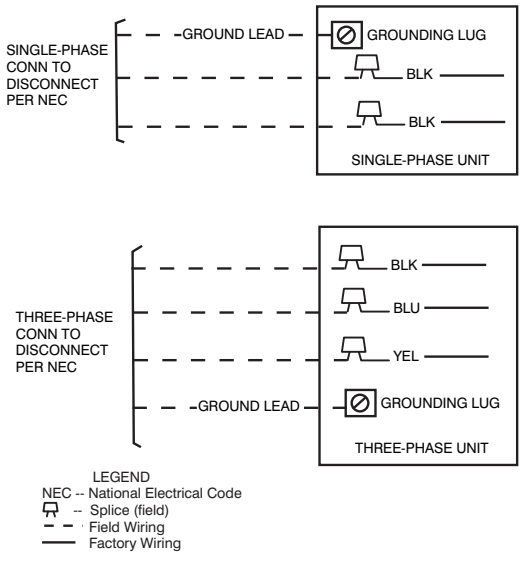

Fig. 21 - Line Power Connections

NOTE: Operating unit on improper line voltage constitutes abuse and could affect Carrier warranty. **Do not** install unit in a system where voltage may fluctuate above or below permissible limits.

Control Wiring

The control circuit is 24 volts AC (minimum 40VA) supplied from the indoor unit.

1. Make sure you have enough control wires to cover the distance between the indoor and outdoor unit.
2. Route one end of the control wiring through the opening provided in the unit side panel and connect to the control terminal strip using either Fig. 21 for 38HDF units and Fig. 22 for 38QRF units.

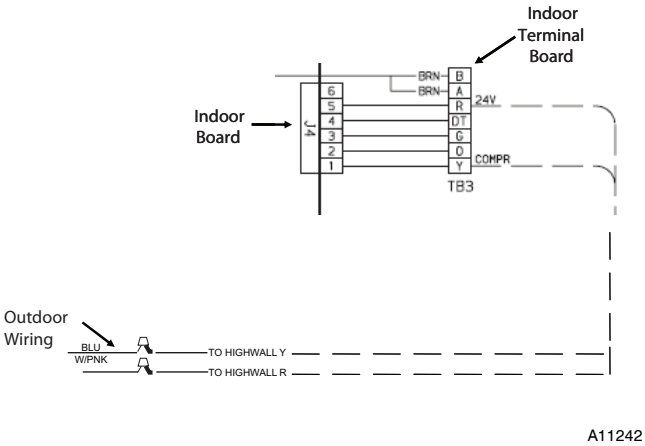

Fig. 22 - 38HDF Control Terminal Strip

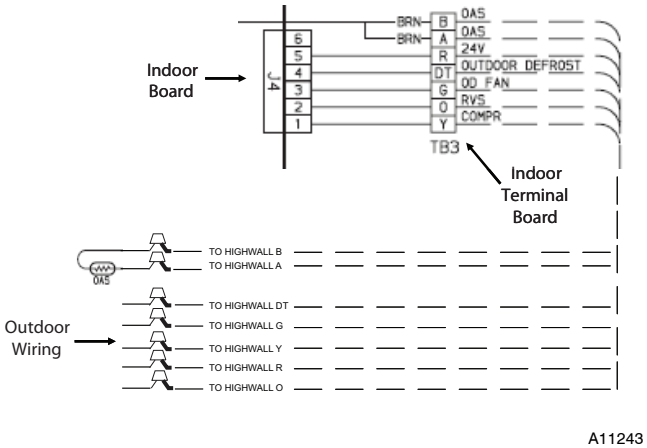

Fig. 23 - 38QRF Control Terminal Strip

NOTE: Use No. 18 AWG color-coded, insulated (35°C minimum) wire. If the distance between the indoor and outdoor unit is greater than 100 ft. (30.5 m), as measured along the control voltage wires, use No. 16 AWG color-coded wire to avoid excessive voltage drop.

Table 10 – 38HDF / 38QRF Electrical Data

38HDF / 38QRF UNIT SIZE	V–PH–Hz	VOLTAGE RANGE*		COMPRESSOR		OUTDOOR FAN MOTOR			MIN CKT AMPS	FUSE/ HACR BKR AMPS
		Min	Max	RLA	LRA	FLA	NEC Hp	kW Out		
018	208/230–1–60	187	253	9.0	48.0	0.80	0.125	0.09	12.1	20
024	208/230–1–60	187	253	12.8	58.3	0.80	0.125	0.09	16.8	25
030	208/230–1–60	187	253	14.1	73.0	1.50	0.25	0.19	18.4	30
035	208/230–1–60	187	253	16.7	79.0	1.50	0.25	0.19	22.3	35
	208/230–3–60	187	253	10.4	79.0	1.50	0.25	0.19	14.5	20
	460–3–60	414	506	5.8	79.0	0.80	0.25	0.19	8.7	15
036	208/230–1–60	187	253	17.9	112.0	1.45	0.25	0.19	23.8	40
	208/230–3–60	187	253	13.2	88.0	1.45	0.25	0.19	18.0	30
	460–3–60	414	506	6.0	44.0	0.80	0.25	0.19	8.3	15

Table 11 – 40QNC, QNQ Fan Coil Electrical Data

UNIT SIZE	V–PH–Hz	VOLTAGE RANGE*		FAN		POWER	
		Min	Max	FLA	Motor Power (Watts)	MIN CKT AMPS	FUSE/CKT BKR AMPS
40QNC01824	208/230–1–60	187	253	0.38	64	0.48	15
40QNC030	208/230–1–60	187	253	0.38	74	0.48	15
40QNC036	208/230–1–60	187	253	0.44	74	0.55	15
40QNQ018	208/230–1–60	187	253	0.38	64	0.48	15
40QNQ024	208/230–1–60	187	253	0.38	64	0.48	15
40QNQ030	208/230–1–60	187	253	0.38	74	0.48	15
40QNQ036	208/230–1–60	187	253	0.44	74	0.55	15

LEGEND:

FLA – Full Load Amps

LRA – Locked Rotor Amps

NEC – National Electrical Code

RLA – Rated Load Amps (compressor)

* Permissible limits of the voltage range at which the unit will operate satisfactorily

NOTES:

1. Control circuit is 24–V on all units and requires external power source. Copper wire must be used from service disconnect to unit.
2. All motors/compressors contain internal overload protection.
3. In compliance with NEC (USA Standard) requirements for multimotor and combination load equipment (refer to NEC Articles 430 and 440), the over current protective device for the unit shall be fuse.
4. Motor RLA values are established in accordance with UL (Underwriters' Laboratories) Standard 465 (USA Standard).
5. 38QRF018–030 units are only available in single–phase voltage.
6. **Unbalanced 3–Phase Supply Voltage**
   Never operate a motor where a phase imbalance in supply voltage is greater than 2%. Use the following formula to determine the percentage of voltage imbalance:

$$= 100 \times \frac{\text{max voltage deviation from average voltage}}{\text{average}}$$

EXAMPLE: Supply voltage is 460–3–60

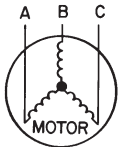

AB = 452v
BC = 464v
AC = 455v

$$\text{Average Voltage} = \frac{452 + 464 + 455}{3} = \frac{1371}{3} = 457$$

Determine maximum deviation from average voltage:

(AB) 457–452 = 5v

(BC) 464–457 = 7v

(AC) 457–455 = 2v

Maximum deviation is 7v.

Determine percentage of voltage imbalance

$$\text{\% of voltage imbalance} = 100 \times \frac{7}{57} = 1.53\%$$

This amount of phase imbalance is satisfactory as it is below the maximum allowable of 2%.

IMPORTANT: Contact your local electric utility company immediately if the supply voltage phase imbalance is more than 2%.

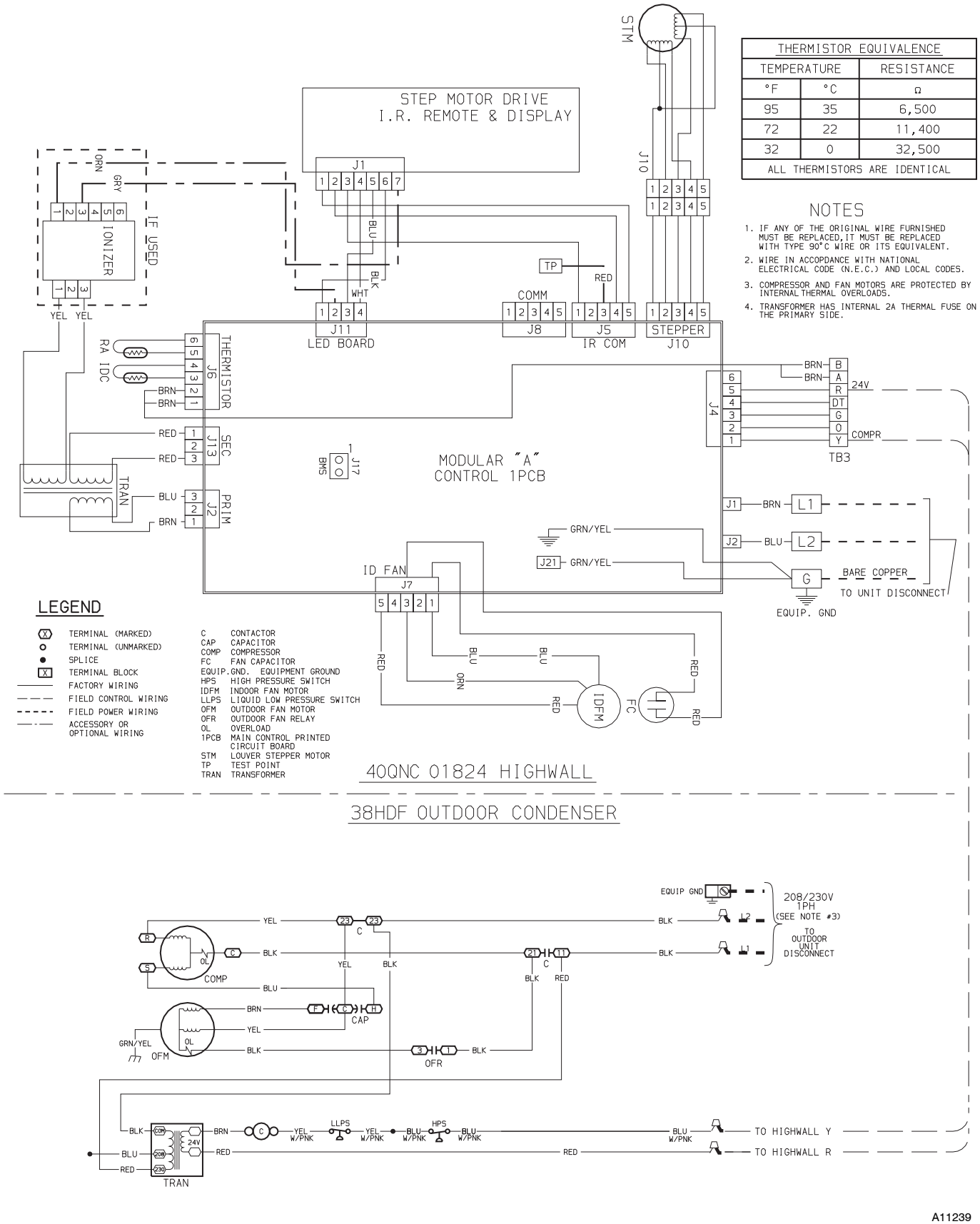

THERMISTOR EQUIVALENCE		
TEMPERATURE		RESISTANCE
°F	°C	Ω
95	35	6,500
72	22	11,400
32	0	32,500
ALL THERMISTORS ARE IDENTICAL		

NOTES

1. IF ANY OF THE ORIGINAL WIRE FURNISHED MUST BE REPLACED, IT MUST BE REPLACED WITH TYPE 90°C WIRE OR ITS EQUIVALENT.
2. WIRE IN ACCOPDANCE WITH NATIONAL ELECTRICAL CODE (N.E.C.) AND LOCAL CODES.
3. COMPRESSOR AND FAN MOTORS ARE PROTECTED BY INTERNAL THERMAL OVERLOADS.
4. TRANSFORMER HAS INTERNAL 2A THERMAL FUSE ON THE PRIMARY SIDE.

Fig. 24 - 40QNC01824 Matched with 38HDF Typical Wiring Schematic

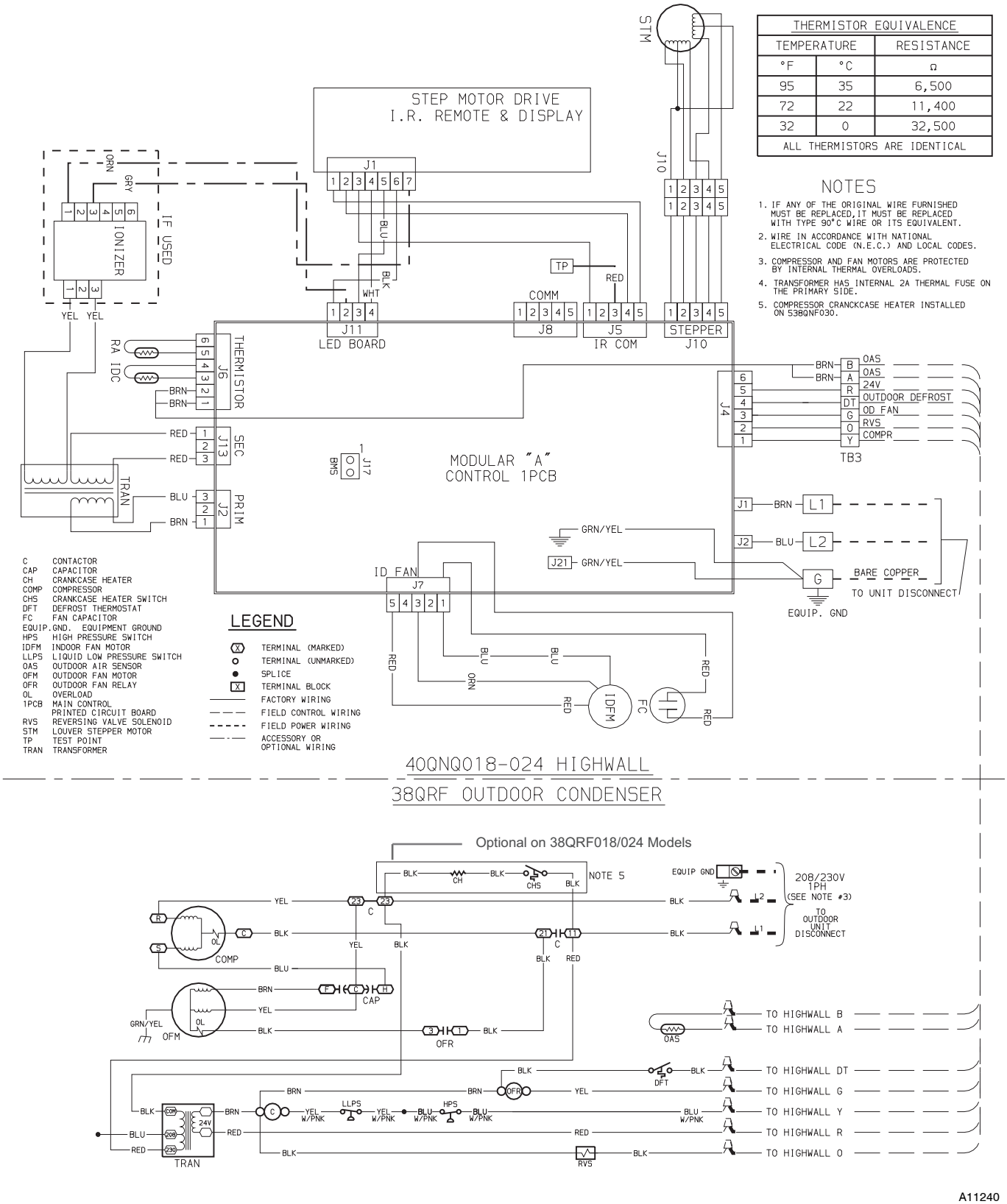

THERMISTOR EQUIVALENCE		
TEMPERATURE		RESISTANCE
°F	°C	Ω
95	35	6,500
72	22	11,400
32	0	32,500
ALL THERMISTORS ARE IDENTICAL		

NOTES

1. IF ANY OF THE ORIGINAL WIRE FURNISHED MUST BE REPLACED, IT MUST BE REPLACED WITH TYPE 90°C WIRE OR ITS EQUIVALENT.
2. WIRE IN ACCORDANCE WITH NATIONAL ELECTRICAL CODE (N.E.C.) AND LOCAL CODES.
3. COMPRESSOR AND FAN MOTORS ARE PROTECTED BY INTERNAL THERMAL OVERLOADS.
4. TRANSFORMER HAS INTERNAL 2A THERMAL FUSE ON THE PRIMARY SIDE.
5. COMPRESSOR CRANCKCASE HEATER INSTALLED ON 538QNF030.

Fig. 25 - 40QNQ018,024 Matched with 38QRF Typical Wiring Schematic

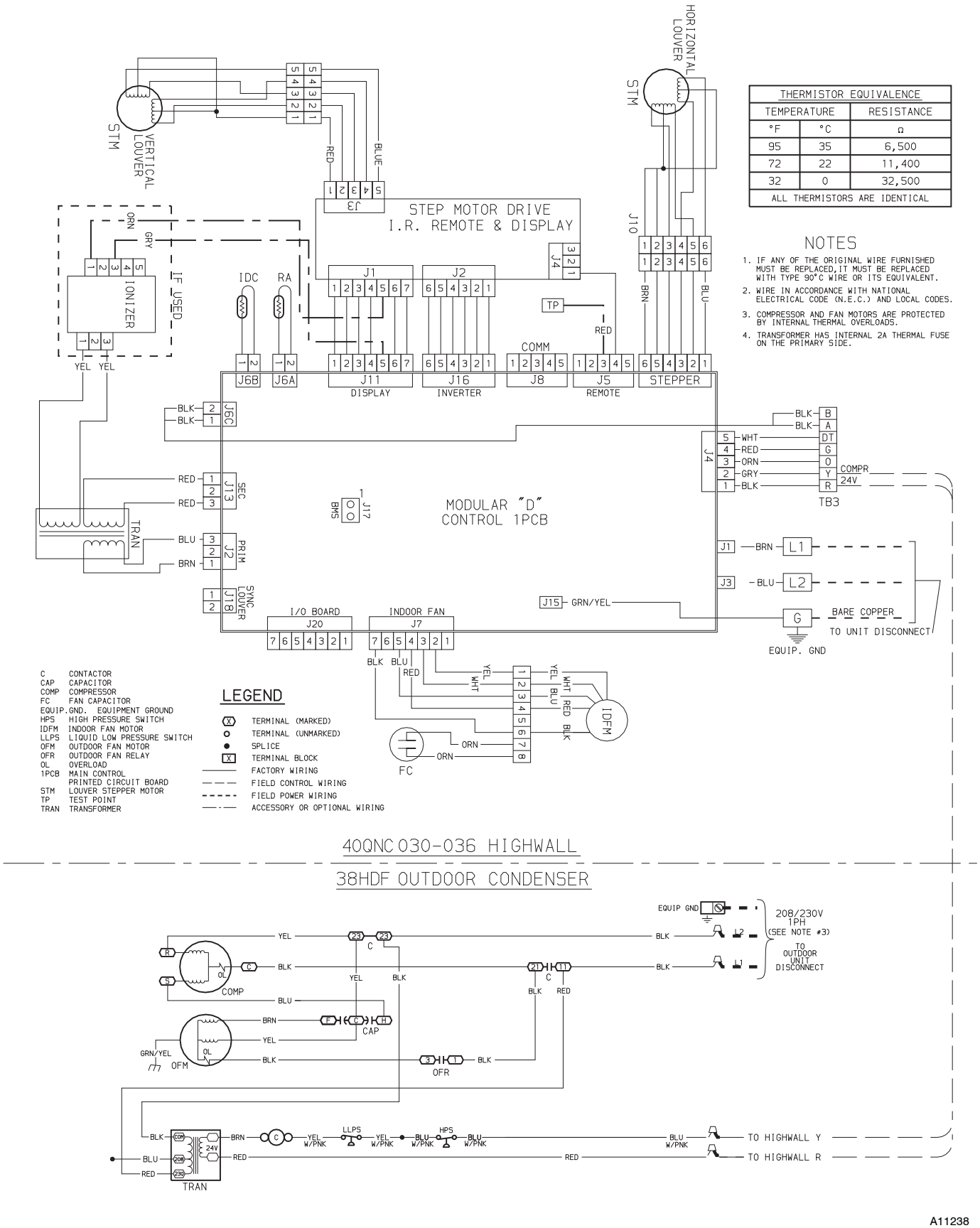

Fig. 26 - 40QNC030, 036 Matched with 38HDF Typical Wiring Schematic

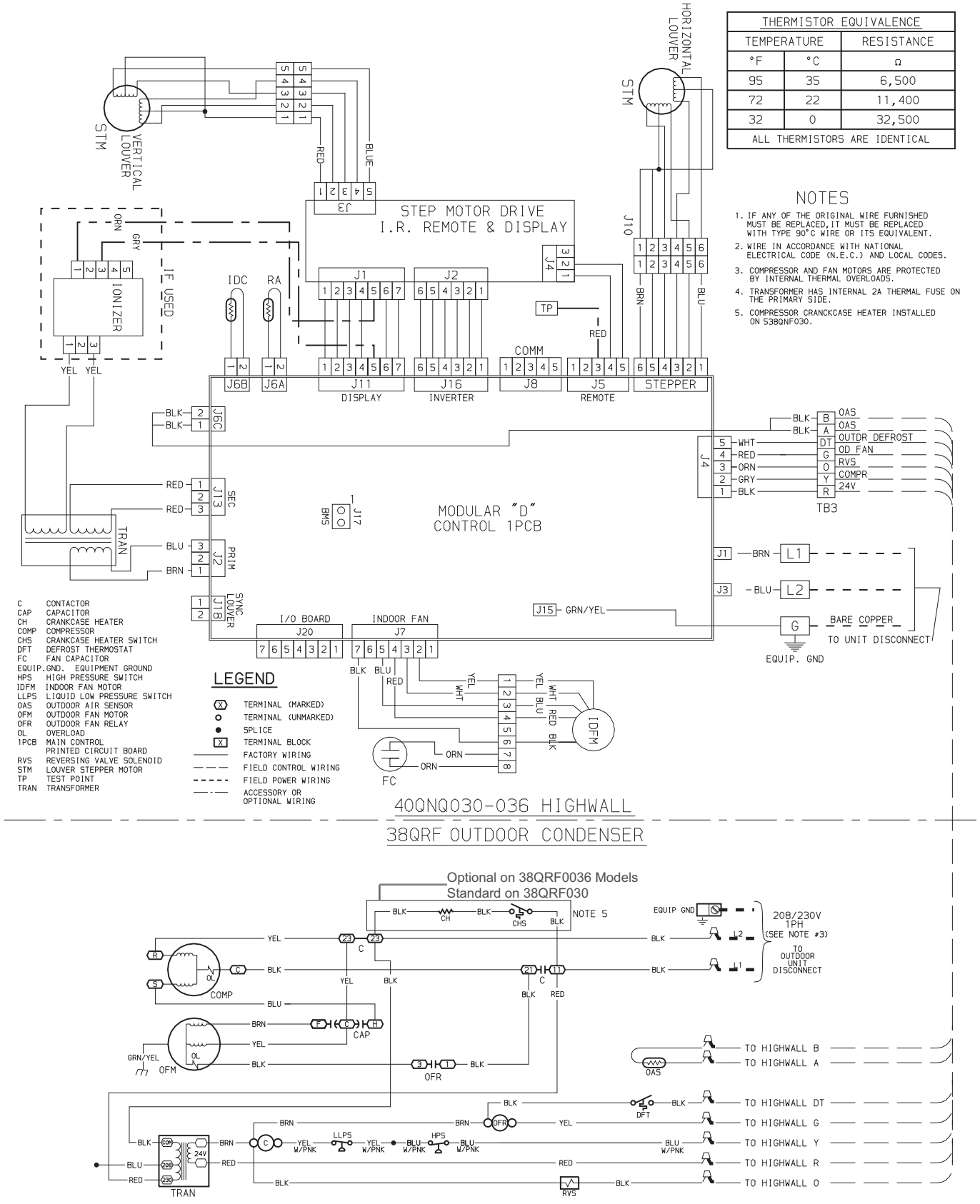

Fig. 27 - 40QNQ030, 036 Matched with 38QRF Typical Wiring Schematic

Run Power Wiring for Indoor Unit

Be sure field wiring complies with local building codes and NEC, and unit voltage is within limits shown in Table 11.

Contact local power company for correction of improper line voltage.

⚠ WARNING

ELECTRICAL SHOCK HAZARD

Failure to follow this warning could result in personal injury or death.

Before installing, modifying, or servicing system, main electrical disconnect switch must be in the OFF position. There may be more than 1 disconnect switch. Lock out and tag switch with a suitable warning label.

⚠ CAUTION

UNIT DAMAGE HAZARD

Failure to follow this caution may result in equipment damage or improper operation.

Unit failure as a result of operation on improper line voltage or excessive phase imbalance constitutes abuse and may cause damage to electrical components. Such operation could void any applicable Carrier warranty.

NOTE: Use copper wire only between disconnect switch(es) and unit.

NOTE: Install branch circuit disconnect of adequate size to handle unit starting current per NEC. Locate disconnect within sight of, and readily accessible from, unit, per section 440-14 of NEC. Some codes allow indoor unit to share disconnect with outdoor unit if disconnect can be locked; check local code before installing in this manner.

The 40QNC/QNQ units require their own power supply.

1. Locate the indoor power supply.
2. Locate and install disconnect switch per NEC and local codes.
3. Run power supply wiring to disconnect switch.
4. Run power wiring from disconnect switch to wall mount area.
5. If any accessories are being installed, refer to the individual accessory instructions for guidance on wire routing at this time.

Install All Power, Interconnecting Wiring, Piping and Drain Hose to Indoor Unit .

1. Run control wiring from the outdoor unit through the access hole in the wall and make sure you have enough wire to reach the control box of the unit once hung on the mounting plate.
2. It is a recommended that flare connections is located on the outside of the wall where the indoor unit is to be mounted. If an extension pipe is required to facilitate this location, measure, fabricate and install the extension pipes to the indoor unit before hanging the unit on the mounting bracket.
3. If piping connections are on the outside wall, pass the pipes (refrigerant and drain) through the wall sleeve and then hook the indoor unit body on top of the wall hanging bracket. Support the unit away from the bottom using a tool or a piece of wood.

NOTE: Tie together the refrigerant piping, the drain hose, and the electrical connection wires and ensure that the drain hose is at the bottom as shown in Fig. 28.

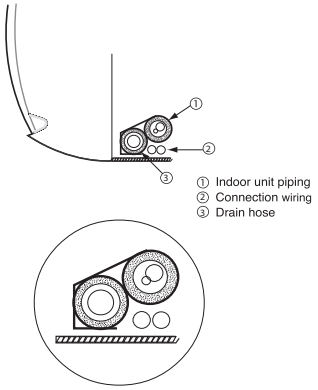

Fig. 28 - Location of Piping, Hose, and Wiring

4. If required make the flare connections.
5. Route the power and control wiring through the back side of the unit and to the control box area. If the wired remote or zone manger accessory are to be used, perform any modifications required at this time. Refer to the Accessory installation instructions).
6. Remove the control box cover and finish all indoor unit wiring connections as shown on the wiring diagram or in the accessory installation instructions. Replace the control box cover.
7. Fix the bottom part of the unit to the wall mounting bracket and push it carefully until the two bracket hooks fit into the marked places at the base of the unit until it snaps into place. See Fig. 29.

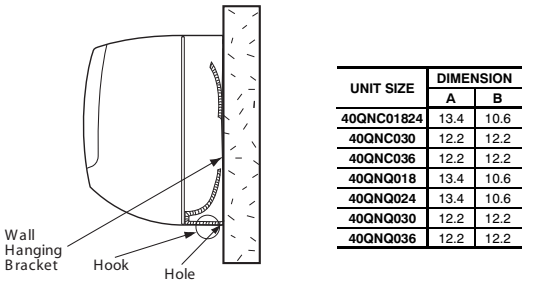

UNIT SIZE	DIMENSION	
	A	B
40QNC01824	13.4	10.6
40QNC030	12.2	12.2
40QNC036	12.2	12.2
40QNQ018	13.4	10.6
40QNQ024	13.4	10.6
40QNQ030	12.2	12.2
40QNQ036	12.2	12.2

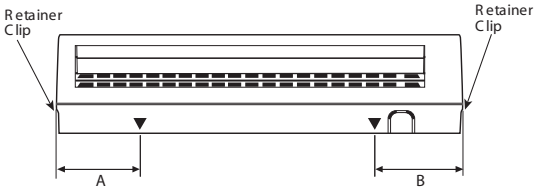

A08365

Fig. 29 - Wall Mounting Details

8. If the refrigerant piping connections are located outside the wall, tighten the flare connections as shown in Fig. 30. Insulate all exposed refrigerant lines and secure to the wall and fill any void spaces in the hole.

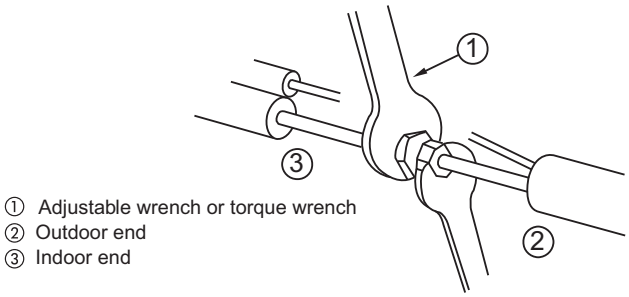

A07201

Fig. 30 - Tightening Connections

USER INTERFACE

The indoor unit includes a wireless remote control to operate the unit (an Owner's Manual is supplied with the unit). If you have two units installed in the same space and they need to work independently, the remote controls and the units need to be configured as follow:

Unit Configuration

Turn the unit off by pressing the ⏻. Press and hold the M and buttons of the remote control for more than 5 seconds. The display will be cleared and the time segments will display the first configuration item (rAdr=remote address) and the temperature segments will display the default value of this configuration item (Ab=control of both indoor units). Press Λ and V to change the default value to the new value of (a) or (b). Press the button to transmit the new configuration to the unit. Press the ⏻ button to leave the configuration menu.

Remote Control Configuration

Turn the unit off by pressing the ⏻ button. Press and hold the V and buttons for more than 5 seconds. The display will be cleared and the time segments will display the first configuration item (CH=remote address) and the temperature segments will display the default value of this configuration item (Ab=control of both indoor units).

Press Λ and V to change the default value to the new value of (a) or (b). Press the button to transmit the new configuration to the unit. Press the ⏻ button to leave the configuration menu.

NOTE: When 30 seconds have elapsed and no buttons have been pressed, the remote control will automatically exit the configuration menu and resume its normal operation.

A wall mounted control or zone manager can be used to control a unit or multiple units.

Wired Control

If a wall mounted wired control is required the following steps should be performed at the same time the indoor control and power wiring are being connected:

1. Unplug the connector on J5.
2. Remove the wire harness from the wired control box
3. Plug one end of the wire harness into the J5 connector on the board
4. Route the other end of the wire harness to the back of the unit along the low voltage wiring
5. Connect the other end of the wire harness to the field supplied wiring between the indoor unit and the wired control as shown in wired control installation instructions and Fig. 31.

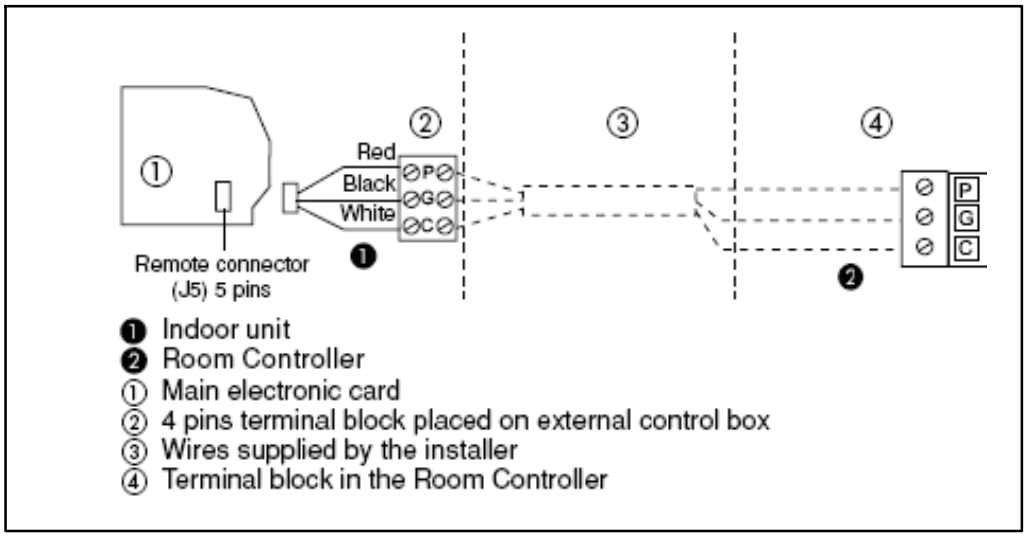

A09512

Fig. 31 - Control Wiring Between Indoor and Outdoor Units

Up to six units can be daisy-chained and controlled from one wired control.

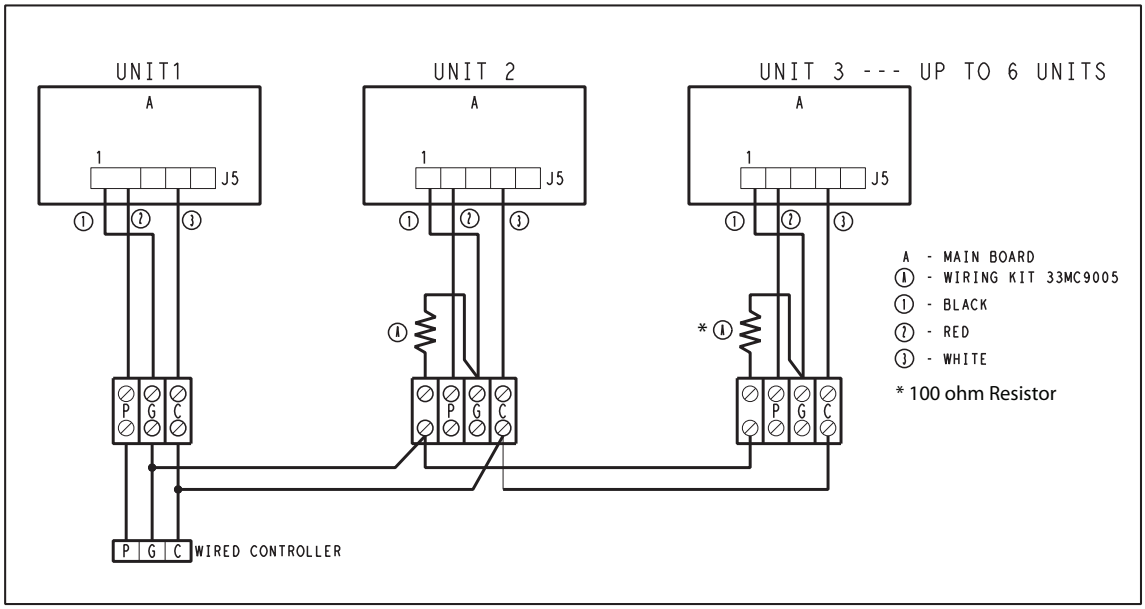

A09513

Fig. 32 - Multiple Unit Control Wiring

Zone Manager

If a Zone Manager is required, the following steps should be performed at the same time the indoor control and power wiring are being connected:

1. Plug the communication board to the J8 as shown in Fig. 33
2. Connect one end of the wire harness supplied with the Zone Manager to the communication board.
3. Route the other end of the wire harness along the voltage control to the back of the unit.
4. Connect the other end of the wire harness to the field supplied wiring that will be connected to the zone manager as shown in Fig. 33. (Shielded cables are required. Refer to Zone Manager Installation Instructions for further information.)

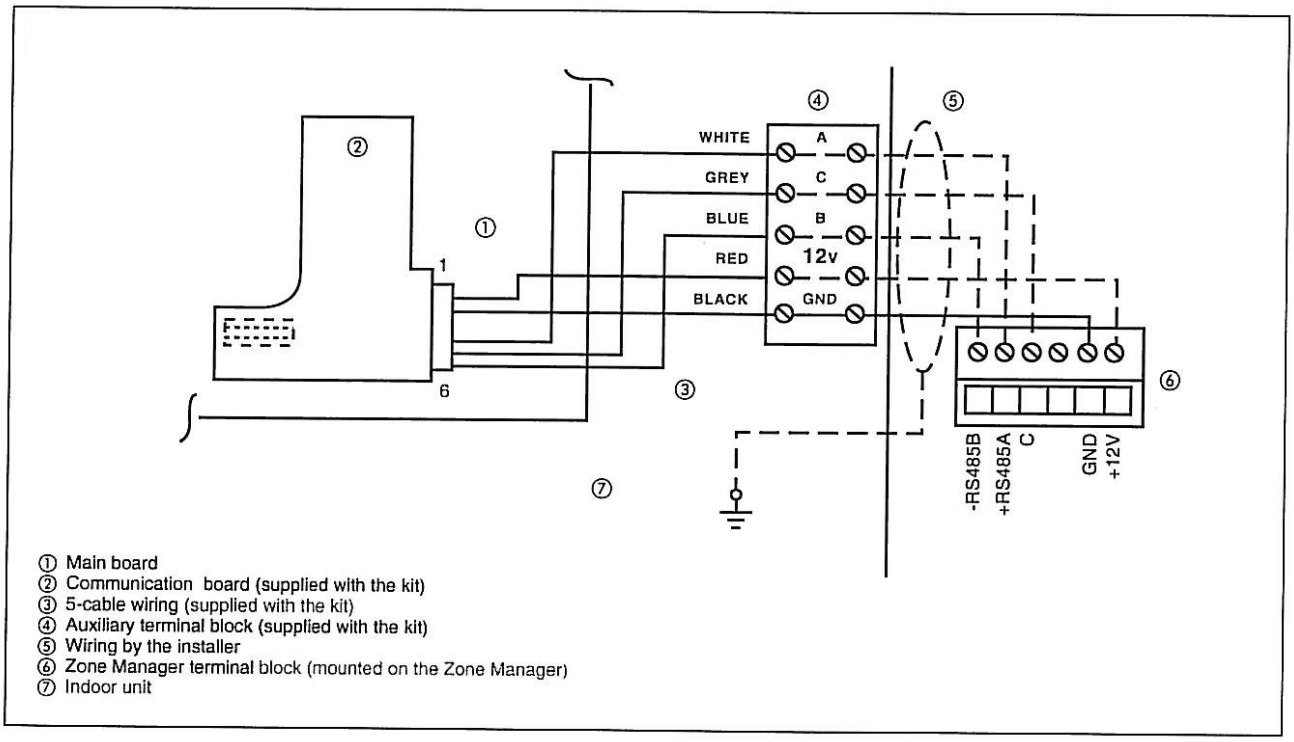

A09514

Fig. 33 - Wiring for Zone Manager

START-UP

Preliminary Checks

1. Check condensate drainage system; on the opposite side of the drain connection, insert a water bottle up into the fan coil unit and fill the drain pan. Water must flow steadily; if not, check the pipe slope or inspect for any pipe restrictions.
2. Make sure all wiring connections are correct and they are tight.
3. Field electrical power source must agree with unit name plate rating.
4. Check that all barriers, covers, and panels are in place. Ensure that the filters and return-air grilles on the indoor unit have been installed and that the discharge louvers are positioned correctly.
5. All service valves must be closed.
6. On units with crankcase heaters, ensure belly-band heaters are tight around the compressor.

Evacuate and Dehydrate the System

⚠ CAUTION

UNIT DAMAGE HAZARD

Failure to follow this caution may result in equipment damage or improper operation.

Never use the system compressor as a vacuum pump.

Using Vacuum Pump

1. Completely tighten flare nuts A, B, C, D, connect manifold gage charge hose to a charge port of the low side service valve. (See Fig. 34.)
2. Connect charge hose to vacuum pump.
3. Fully open the low side of manifold gage. (See Fig. 35)
4. Start vacuum pump
5. Evacuate using either deep vacuum or triple evacuation method.
6. After evacuation is complete, fully close the low side of manifold gage and stop operation of vacuum pump.
7. The factory charge contained in the outdoor unit is good for up to 25 ft. (8 m) of line length. For refrigerant lines longer than 25 ft (8 m), add 0.3 oz. per foot of extra piping up to the maximum allowable length.
8. Disconnect charge hose from charge connection of the low side service valve.
9. Fully open service valves B and A.
10. Securely tighten caps of service valves.

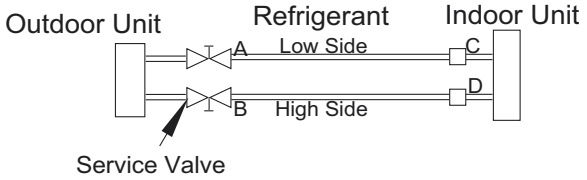

A07360

Fig. 34 - Service Valve

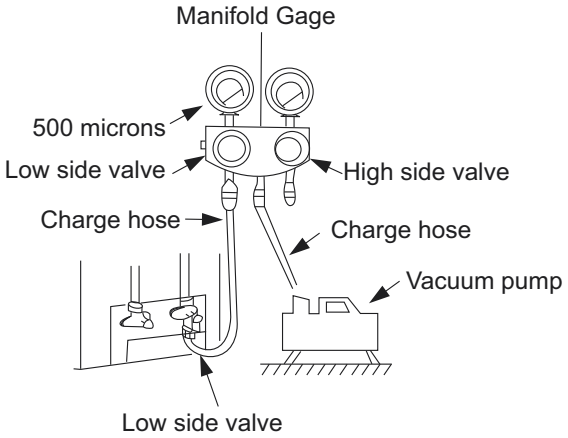

A07361

Fig. 35 - Manifold

Deep Vacuum Method

The deep vacuum method requires a vacuum pump capable of pulling a vacuum of 500 microns and a vacuum gage capable of accurately measuring this vacuum depth. The deep vacuum method is the most positive way of assuring a system is free of air and liquid water. (See Fig. 36)

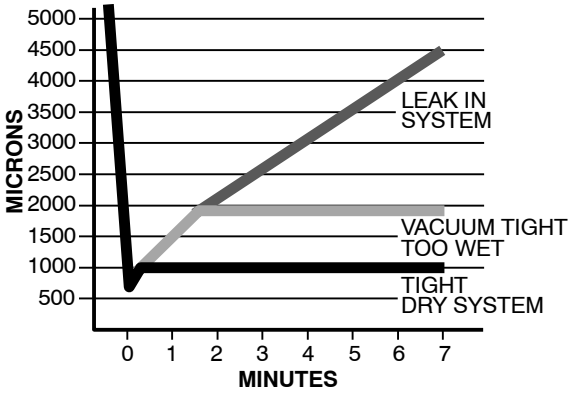

A95424

Fig. 36 - Deep Vacuum Graph

Triple Evacuation Method

The triple evacuation method should only be used when vacuum pump is only capable of pumping down to 28 in. of mercury vacuum and system does not contain any liquid water.

Refer to Fig. 37 and proceed as follows:

1. Pump system down to 28 in. of mercury and allow pump to continue operating for an additional 15 minutes.
2. Close service valves and shut off vacuum pump.
3. Connect a nitrogen cylinder and regulator to system and open until system pressure is 2 psig.
4. Close service valve and allow system to stand for 1 hr. During this time, dry nitrogen will be able to diffuse throughout the system absorbing moisture.
5. Repeat this procedure as indicated in Fig. 37. System will then be free of any contaminants and water vapor.

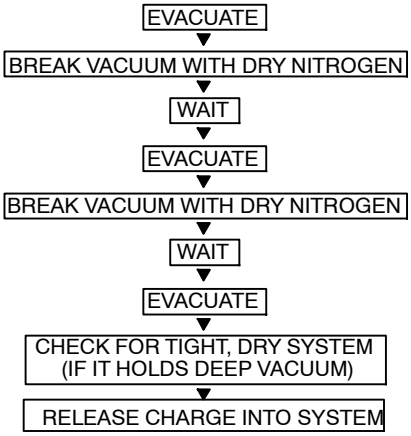

A95425

Fig. 37 - Triple Evacuation Method

To Start the Unit:

1. If the outdoor unit is equipped with a crankcase heater, turn on the indoor and outdoor disconnect switches to supply power the system 12 hours before starting the system.
2. Release charge into the system by opening (back-seating) liquid and suction line service valves.
3. Set the wireless remote control or wired remote control below ambient temperature. Operate the unit for 15 minutes.
4. Refer to Table 6 to determine if additional charge is required. Also, if you have a long line application, refer to the Duct Free Long Line Application Guide to determine the additional charge that is required beyond 25 ft (7.6 m).
5. Calculate the total additional charge required and weigh in.
6. Charge should be added as liquid (not gas) slowly and carefully to low side to avoid liquid slugging.
7. Start unit with operation test. In test mode the unit will run in cooling and heating (on heat pumps) regardless if there is demand or not.

Set Unit in Test Mode Using Wireless Control

Turn power on to the unit. Insert batteries in remote control. Press the ∧ and the buttons on the remote control for 5 seconds. The remote control will be cleared and the time segment will display the Src1=service test mode. Press the button to transmit the service test signal to the unit. After the test has completed press the button to leave the test menu.

NOTE: When 30 seconds have elapsed and no buttons have been pressed, the remote control will automatically exit the test menu and resume its normal operation.

Set Unit in Test Mode Using Wired Control

There is a hidden service test mode that is initiated through a combination of button presses when the remote is off. The following combination must be pressed within a 6 second period:

"DOWN-FAN-UP-FAN-MODE"

Once in service test mode, the service test mode message will be sent and "Sr" will be displayed in the temperature icons until the "DOWN" button is pressed.

During Service Test mode, all the icons are off. the only button that is active is the "DOWN" button.

To cancel Service Test mode, press the "DOWN" button to send a normal message with "OFF" mode.

Service Test mode automatically times out after 30 minutes and the remote will operate normally.

Test Mode Sequence of Operation

Once unit is in TEST MODE, all remote control messages are ignored except for a message to turn the unit OFF. Buzzer will beep twice.

When in TEST MODE, the unit will operate as follows:

1. The unit Status (Green) and Timer (Yellow) LEDs will blink every 2 seconds

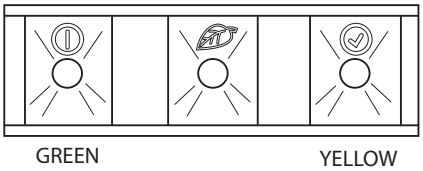

A09594

Fig. 38 - LED Display

2. Indoor fan will operate according to user – selected speed. If Auto fan is selected, the fan will run in High speed
3. Cooling only system
   a. Unit will operate in cool mode with demand
   b. Louver will operate according to user - selected position or in cool position if louvers are set to Auto
4. Heat pump system
   a. Unit will run in cooling mode with demand for 3 minutes
   b. Unit will run in heat pump mode with demand for 2 minutes or until indoor coil temperature is greater than 104°F (40°C). If coil temperature reaches 104°F (40°C), the unit will run in cool mode until test mode is exited.
   c. Louver will operate according to user - selected position or in cool/heat position if louvers are set to Auto.
5. Following will cancel Test Mode:
   a. Unit is turned off by controller
   b. Power is cycled during Test Mode
   c. 30 minutes elapsed
   d. Fail Mode

SERVICE

⚠ WARNING

ELECTRICAL SHOCK HAZARD

Failure to follow this warning could result in personal injury or death.

Before installing, modifying, or servicing system, main electrical disconnect switch must be in the OFF position. There may be more than 1 disconnect switch. Lock out and tag switch with a suitable warning label.

Pump-down Procedure

The system may be pumped down in order to make repairs on the low side without losing complete refrigerant charge.

1. Attach pressure gage to suction service valve gage port.
2. Front-seat the mixed phase line valve.

⚠ CAUTION

UNIT DAMAGE HAZARD

Failure to follow this caution may result in equipment damage or improper operation.

The unit coils hold only the factory-designated amount of refrigerant. Additional refrigerant may cause units to relieve pressure through the compressor internal pressure relief valve (indicated by a sudden rise of suction pressure) before suction pressure reaches 20 psig. If this occurs, shut off unit immediately then front-seat the suction valve and remove and recover excess refrigerant following accepted practices.

3. Start unit and run until suction pressure reaches 5 psig.
4. Shut unit off and front-seat suction valve.
5. Depressurize low side of unit and recover refrigerant following accepted practices.

Filter Drier

Whenever the filter drier is exposed to the atmosphere it must be replaced. Only use factory specified liquid-line filter driers with rated working pressures less than 600 psig.

NOTE: Do not install a suction-line filter drier in the mixed phase line.

Refrigerant Charging

⚠ WARNING

PERSONAL INJURY AND/OR EQUIPMENT DAMAGE HAZARD

Failure to follow this warning could result in personal injury and/or equipment damage.

Wear safety glasses and gloves when handling refrigerant. Do not overcharge system - this can cause compressor flooding.

All units are shipped with the refrigerant charge listed on nameplate.

NOTE: Do not vent or depressurize unit refrigerant to atmosphere. Remove and recover refrigerant following accepted practices.

TROUBLESHOOTING

See Table 12 and Table 13 for troubleshooting information.

Fault Code

Once a failure occurs with the indoor unit in operation, the green LED on the indoor unit flashes at intervals of 0.5 seconds. The fault code is deduced from the number of times the green LED flashes, blocking unit operation. Between one flash cycle and the next one, a pause of 3 seconds elapses.

Table 12 – Green LED (Indoor Unit Fault)

CODE	DESCRIPTION
3	Room Air Sensor Fault
4	Indoor Unit Coil Sensor Fault
14	Outdoor Unit Air Sensor Fault

Table 13 – Troubleshooting

PROBLEM	POSSIBLE CAUSE	SOLUTION
Compressor and Fan of the Outdoor Unit Will Not Start	Unit not energized	Check the main power connection.
	Main switch is set to OFF	Check and put it to ON position.
	Main switch fuses are blown	Replace fuses.
	Compressor cycling protection is on	Wait for 3 minutes.
	Main power voltage is too low	Check and set to the correct voltage.
	Electrical connections are too loose or are wrong	Check and tighten or correct connections.
Compressor Will Not Start, But Outdoor Fan is Operating	Electrical connections of compressor are loose or wrong	Check and tighten or repair compressor.
Compressor Stops Due to Over–temperature	Compressor burnt out; seized or protection device on	Check for the cause and replace compressor if necessary.
	Wrong refrigerant charge in unit (excessive or low) or air or other non–condensable gasses in the circuit	Drain refrigerant, evacuate and recharge. CAUTION: Do not vent refrigerant to the atmosphere; use refrigerant recovery equipment.
	Main voltage is too high or too low	Check voltage setting and adjust if necessary.
	Condenser coil obstructed	Remove obstruction.
	Outdoor fan off	Check cause and resume operation or repair.
	Wrong indoor unit thermistors	Replace thermistors.
	Refrigerant circuit clogged	Check and remove obstructions.
	Reversing valve faulty on heat pump models	Replace reversing valve.
	Expansion device clogged or covered with ice	Drain refrigerant, evacuate and recharge. CAUTION: Do not vent refrigerant to the atmosphere; use refrigerant recovery equipment.
Compressor Runs Continuously	Unit selected is too small for application requirements	Contact a qualified service technician for a system evaluation.
	Indoor temperature setting too low or too high	Check temperature setting.
	Outdoor unit fan faulty	Replace outdoor fan.
	Air or other non–condensable gasses in the circuit	Drain refrigerant, evacuate and recharge. CAUTION: Do not vent refrigerant to the atmosphere; use refrigerant recovery equipment.
	Obstructions at air intake or dirty indoor unit filters	Remove obstruction and/or clean filter.
Frequent Ice–Build–Up on Outdoor Coil	Outdoor fan is stopped	Check cause and repair.
Discharge Pressure Too High	Outdoor coil dirty or obstructed	Clean or remove obstructions.
	Condenser fan faulty	Replace condenser fan.
	Indoor temperature setting too low or too high	Check temperature setting.
	Air or other non–condensable gasses in the circuit	Drain refrigerant, evacuate and recharge. CAUTION: Do not vent refrigerant to the atmosphere; use refrigerant recovery equipment.
Discharge Pressure Too Low	Indoor temperature setting too high or too low	Check temperature setting.
	Outdoor coil dirty or obstructed	Clean or remove obstructions.
	Indoor unit air filter dirty	Clean filter.
Suction Pressure Too High	Indoor temperature setting too high or too low	Check temperature setting.
	Reversing valve faulty or internal leak	Replace reversing valve.
Suction Pressure Too Low	Indoor temperature setting too high or too low	Check temperature setting.
	Evaporator coil covered with ice	Air circulation on the evaporator not sufficient; check and repair.
	Expansion device or suction line clogged	Check and repair.
	Outdoor fan does not stop during defrost periods	Check electrical parts.
Outdoor Fan Cycling Due to Over–Temperature Protection	Electrical connection loose	Check connections.
	Fan motor burn out	Replace.
	Fan bearing seized	Check and repair.
	Expansion device clogged or covered with ice	Drain refrigerant, evacuate and replace. **CAUTION:** Do not vent refrigerant to the atmosphere; use refrigerant recovery equipment.

Copyright 2011 Carrier Corp. • 7310 W. Morris St. • Indianapolis, IN 46231
Printed in U.S.A. Edition Date: 06/11

Manufacturer reserves the right to change, at any time, specifications and designs without notice and without obligations.

Replaces: 40QNC−Q−9SI