45MHHAQ/C
High Wall Ductless System
Heat Pump Sizes 9K to 36K
Cooling Only Sizes 9k to 24K

Carrier

SERVICE MANUAL

TABLE OF CONTENTS

PAGE

TABLE OF CONTENTS 1
SAFETY CONSIDERATION 1
INTRODUCTION 1
PRECAUTIONS 3
INFORMATION SERVICING (FLAMMABLE MATERIALS) . . . 5
INDOOR UNIT SIZES 8
MODEL NUMBER NOMENCLATURE 8
WIRING 9
CONNECTION DIAGRAMS 10
WIRING DIAGRAMS 11
REFRIGERANT CYCLE DIAGRAMS 15
ELECTRONIC FUNCTIONS 18
INQUIRY MODE 21
TROUBLESHOOTING 25
GENERAL TROUBLESHOOTING 26
QUICK MAINTENANCE BY ERROR CODE 27
TROUBLESHOOTING BY ERROR CODE 29
DISASSEMBLY INSTRUCTIONS - 9K - 24K Units 46
APPENDIX 73

SAFETY CONSIDERATION

Installing, starting up, and servicing air-conditioning equipment can be hazardous due to system pressures, electrical components, and equipment location (roofs, elevated structures, etc.). Only trained, qualified installers and service mechanics should install, start-up, and service this equipment.

Untrained personnel can perform basic maintenance functions such as coil cleaning. All other operations should be performed by trained service personnel.

When working on the equipment, observe precautions in the product literature and on tags, stickers, and labels attached to the equipment.

Follow all safety codes. Wear safety glasses and work gloves. Keep a quenching cloth and fire extinguisher nearby when brazing. Use care in handling, rigging, and setting bulky equipment.

Read this manual thoroughly and follow all warnings or cautions included in the literature and attached to the unit. Consult local building codes and National Electrical Code (NEC) for special requirements. Recognize safety information. This is the safety-alert symbol ⚠. When you see this symbol on the unit and in instructions or manuals, be alert to the potential for personal injury.

Understand these signal words: **DANGER**, **WARNING**, and **CAUTION**. These words are used with the safety-alert symbol. **DANGER** identifies the most serious hazards which **will** result in severe personal injury or death. **WARNING** signifies hazards which **could** result in personal injury or death. **CAUTION** is used to identify unsafe practices which **may** result in minor personal injury or product and property damage. **NOTE** is used to highlight suggestions which **will** result in enhanced installation, reliability, or operation.

⚠ WARNING

ELECTRICAL SHOCK HAZARD
Failure to follow this warning could result in personal injury or death.
Before installing, modifying, or servicing system, main electrical disconnect switch must be in the **OFF** position. There may be more than 1 disconnect switch. Lock out and tag switch with a suitable warning label.

⚠ WARNING

EXPLOSION HAZARD
Failure to follow this warning could result in death, serious personal injury, and/or property damage. Never use air or gases containing oxygen for leak testing or operating refrigerant compressors. Pressurized mixtures of air or gases containing oxygen can lead to an explosion.

⚠ CAUTION

EQUIPMENT DAMAGE HAZARD
Failure to follow this caution may result in equipment damage or improper operation.Do not bury more than 36 in. (914 mm) of refrigerant pipe in the ground. If any section of pipe is buried, there must be a 6 in. (152 mm) vertical rise to the valve connections on the outdoor units.

If more than the recommended length is buried, refrigerant may migrate to the cooler buried section during extended periods of system shutdown. This causes refrigerant slugging and could possibly damage the compressor at start-up.

INTRODUCTION

This service manual provides the necessary information to service, repair, and maintain the 45MHHAQ/C family of heat pumps. This manual has an “APPENDIX” on page 73 with data required to perform troubleshooting. Use the “TABLE OF CONTENTS” on page 1 to locate a desired topic.

⚠ WARNING

This appliance is not intended for use by persons (including children) with reduced physical, sensory or mental capabilities, or lack of experience and knowledge, unless they have been given supervision or instruction concerning use of the appliance by a person responsible for their safety. Children should be supervised to ensure that they do not play with the appliance.

⚠ WARNING

Only use the specified wire. If the wire is damaged, it must be replaced by the manufacturer, its service agent or similarly qualified persons in order to avoid a hazard. The product must be properly grounded at the time of installation, or electric shock may occur.

For all electrical work, follow all local and national wiring standards, regulations, and the Installation Manual. Connect the cables tightly, and clamp them securely to prevent external forces from damaging the terminal. Improper electrical connections can overheat and cause fire, and may also cause shock. All electrical connections must be made according to the Electrical Connection Diagram located on the panels of the indoor and outdoor units.

All wiring must be properly arranged to ensure that the control board cover can close properly. If the control board cover is not closed properly, it can lead to corrosion and cause the connection points on the terminal to heat up, catch fire, or cause electrical shock.

Disconnection must be incorporated in the fixed wiring in accordance with NEC, CSA, and Local Codes. Do not share the electrical outlet with other appliances. Improper or insufficient power supply can cause fire or electric shock.

If connecting power to fixed wiring, an all-pole disconnection device which has at least 3mm clearances in all poles, and have a leakage current that may exceed 10mA, the residual current device (RCD) having a rated residual operating current not exceeding 30mA, and disconnection must be incorporated in the fixed wiring in accordance with NEC, CSA, and Local Codes.

⚠ WARNING

Turn of the unit and disconnect the power before performing any installation or repairing. Failure to do so can cause electric shock.

Installation must be performed by an authorized dealer or specialist. Defective installation can cause water leakage, electrical shock, or fire. Installation must be performed according to the installation instructions.

Improper installation can cause water leakage, electrical shock, or fire. Contact an authorized service technician for repair or maintenance of this unit. This appliance shall be installed in accordance with national wiring regulations.

Only use the included accessories, parts, and specified parts for installation. Using non-standard parts can cause water leakage, electrical shock, fire, and can cause the unit to fail.

Install the unit in a firm location that can support the unit's weight. If the chosen location cannot support the unit's weight, or the installation is not done properly, the unit may drop and cause serious injury and damage. Install drainage piping according to the instructions in this manual. Improper drainage may cause water damage to your home and property.

For units that have an auxiliary electric heater, do not install the unit within 3 feet (1 meter) of any combustible materials.

If combustible gas accumulates around the unit, it may cause fire.

Do not turn on the power until all work has been completed.

When moving or relocating the unit, consult experienced service technicians for disconnection and re-installation of the unit.

How to install the appliance to its support, please read the information for details in "Indoor Unit Installation" and "Outdoor Unit Installation" sections.

NOTE: The air conditioner's circuit board (PCB) is designed with a fuse to provide overcurrent protection. The specifications of the fuse are printed on the circuit board, for example: T3.15AL/250VAC, T5AL/250VAC, T3.15A/250VAC, T5A/ 250VAC, T20A/250VAC, T30A/250VAC,etc.

NOTE: Only the blast-proof ceramic fuse can be used.

⚠ WARNING

FOR FLAMMABLE REFRIGERANTS

Do not use means to accelerate the defrosting process or to clean, other than those recommended by the manufacturer.

The appliance shall be stored in a room without continuously operating ignition sources (for example: open flames, an operating gas appliance or an operating electric heater).

Do not pierce or burn. Be aware that refrigerants may not contain an odor.

⚠ WARNING

PERSONAL INJURY AND PROPERTY DAMAGE HAZARD

For continued performance, reliability, and safety, the only approved accessories and replacement parts are those specified by the equipment manufacturer. The use of non-manufacturer approved parts and accessories could invalidate the equipment limited warranty and result in fire risk, equipment malfunction, and failure. Review the manufacturer's instructions and replacement parts catalogs available from your equipment supplier.

WARNING - RISK OF FIRE DUE TO FLAMMABLE REFRIGERANT USED. FOLLOW HANDLING INSTRUCTIONS CAREFULLY IN COMPLIANCE WITH NATIONAL REGULATIONS.

R-454B Refrigerant Safety Group **A2L** R-454B

NOTE: Risk of Fire. Flammable refrigerant used. To be repaired only by trained service personnel. Do not puncture refrigerant tubing.

PRECAUTIONS

To prevent personal injury, or property or unit damage, adhere to all precautionary measures and instructions outlined in this manual. Before servicing a unit, refer to this service manual and its relevant sections.

Failure to adhere to all precautionary measures listed in this section may result in personal injury, damage to the unit or to property, or in extreme cases, death.

IN CASE OF ACCIDENT OR EMERGENCY

⚠ WARNING

- If a gas leak is suspected, immediately turn off the gas and ventilate the area if a gas leak is suspected before turning the unit on.
- If strange sounds or smoke is detected from the unit, turn the breaker off and disconnect the power supply cable.
- If the unit comes into contact with liquid, contact an authorized service center.
- If liquid from the batteries makes contact with skin or clothing, immediately rinse or wash the area well with clean water.
- Do not insert hands or other objects into the air inlet or outlet while the unit is plugged in.
- Do not operate the unit with wet hands.

⚠ CAUTION

- Clean and ventilate the unit at regular intervals when operating it near a stove or near similar devices.
- Do not use the unit during severe weather conditions. If possible, remove the product from the window before such occurrences.

PRE-INSTALLATION AND INSTALLATION

⚠ WARNING

- Use this unit only on a dedicated circuit.
- Damage to the installation area could cause the unit to fall, potentially resulting in personal injury, property damage, or product failure.
- Only qualified personnel should disassemble, install, remove, or repair the unit.
- Only a qualified electrician should perform electrical work. For more information, contact your dealer, seller, or an authorized service center.

⚠ CAUTION

While unpacking be careful of sharp edges around the unit as well as the edges of the fins on the con-denser and evaporator.

OPERATION AND MAINTENANCE

⚠ WARNING

- Do not use defective or under-rated circuit breakers.
- Ensure the unit is properly grounded and that a dedicated circuit and breaker are installed.
- Do not modify or extend the power cable. Ensure the power cable is secure and not damaged during operation.
- Do not unplug the power supply plug during operation.
- Do not store or use flammable materials near the unit.
- Do not open the inlet grill of the unit during operation.
- Do not touch the electrostatic filter if the unit is equipped with one.
- Do not block the inlet or outlet of air flow to the unit.
- Do not use harsh detergents, solvents, or similar items to clean the unit. Use a soft cloth for cleaning.
- Do not touch the metal parts of the unit when removing the air filter as they are very sharp.
- Do not step on or place anything on the unit or outdoor units.
- Do not drink water drained from the unit
- Avoid direct skin contact with water drained from the unit.
- Use a firm stool or step ladder according to manufacturer procedures when cleaning or maintaining the unit.

⚠ CAUTION

- Do not install or operate the unit for an extended period of time in areas of high humidity or in an environment directly exposing it to sea wind or salt spray.
- Do not install the unit on a defective or damaged installation stand, or in an unsecure location.
- Ensure the unit is installed at a level position
- Do not install the unit where noise or air discharge created by the outdoor unit will negatively impact the environment or nearby residences.
- Do not expose skin directly to the air discharged by the unit for prolonged periods of time.
- Ensure the unit operates in areas water or other liquids.
- Ensure the drain hose is installed correctly to ensure proper water drainage.
- When lifting or transporting the unit, it is recommended that two or more people are used for this task.
- When the unit is not to be used for an extended time, disconnect the power supply or turn off the breaker.

WARNING FOR USING FLAMMABLE REFRIGERANT

1. Installation (Space)
   – That the installation of pipe-work shall be kept to a minimum.
   – That pipe-work shall be protected from physical damage.
   – Where refrigerant pipes shall be compliance with national gas regulations.
   – That mechanical connections shall be accessible for maintenance purposes.
   – In cases that require mechanical ventilation, ventilation openings shall be kept clear of obstruction.
   – When disposing of the product is used, be based on national regulations, properly processed.
2. Servicing

   Any person who is involved with working on or breaking into a refrigerant circuit should hold a current valid certificate from an industry-accredited assessment authority, which authorizes their competence to handle refrigerants safely in accordance with an industry recognized assessment specification.
3. Maintenance and repair requiring the assistance of other skilled personnel shall be carried out under the supervision of the person competent in the use of flammable refrigerants.
4. Do not use means to accelerate the defrosting process or to clean, other than those recommended by the manufacturer.
5. The appliance shall be stored in a room without continuously operating ignition sources (for example: open flames, an operating gas appliance or an operating electric heater).
6. Be more careful that foreign matter (oil, water, etc.) does not enter the piping. Also, when storing the piping, securely seal the opening by pinching, taping, etc.
7. Do not pierce or burn.
8. Be aware that refrigerants may not contain an odor.
9. All working procedure that affects safety means shall only be carried by competent persons.
10. Appliance shall be stored in a well -ventilated area where the room size corresponds to the room area as specific for operation.
11. The appliance shall be stored so as to prevent mechanical damage from occurring.
12. Joints shall be tested with detection equipment with a capability of 5 g/year of refrigerant or better, with the equipment in standstill and under operation or under a pressure of at least these standstill or operation conditions after installation. Detachable joints shall NOT be used in the indoor side of the unit (brazed, welded joint could be used).
13. When a FLAMMABLE REFRIGERANT is used, the requirements for installation space of appliance and /or ventilation requirements are determined according to
    – the mass charge amount (M) used in the appliance,
    – the installation location,
    – the type of ventilation of the location or of the appliance.
    – piping material, pipe routing, and installation shall include protection from physical damage in operation and service, and be in compliance with national and local codes and standards, such as ASHRAE 15, IAPMO Uniform Mechanical Code, ICC International Mechanical Code, or CSA B52. All field joints shall be accessible for inspection prior to being covered or enclosed.
    – that protection devices, piping, and fittings shall be protected as far as possible against adverse environmental effects, for ex-ample, the danger of water collecting and freezing in relief pipes or the accumulation of dirt and debris;

- that piping in refrigeration systems shall be so designed and installed to minimize the likelihood of hydraulic shock damaging the system;
- that steel pipes and components shall be protected against corrosion with a rustproof coating before applying any insulation;
- that precautions shall be taken to avoid excessive vibration or pulsation;
- the minimum floor area of the room shall be mentioned in the form of a table or a single figure without reference to a formula;
- after completion of field piping for split systems, the field pipe-work shall be pressure tested with an inert gas and then vacuum tested prior to refrigerant charging, according to the following requirements:
  - The minimum test pressure for the low side of the system shall be the low side design pressure and the minimum test pressure for the high side of the system shall be the high side design pressure, unless the high side of the system, cannot be isolated from the low side of the system in which case the entire system shall be pressure tested to the low side design pressure.
  - The test pressure after removal of pressure source shall be maintained for at least 1h with no decrease of pressure indicated by the test gauge, with test gauge resolution not exceeding 5% of the test pressure.
  - During the evacuation test, after achieving a vacuum level specified in the manual or less, the refrigeration system shall be isolated from the vacuum pump and the pressure shall not rise above 1500 microns within 10 min. The vacuum pressure level shall be specified in the manual, and shall be the lessor of 500 microns or the value required for compliance with national and local codes and standards, which may vary between residential, commercial, and industrial buildings.
- field-made refrigerant joints indoors shall be tightness tested according to the following requirements: The test method shall have a sensitivity of 5 grams per year of refrigerant or better under a pressure of at least 0,25 times the maximum allowable pressure. No leak shall be detected.
- correct the minimum room area of the space Amin by multiplying by the altitude adjustment factor (AF) factor in the below table based on for building site ground level altitude (Halt) in meters.

Table 1 — Altitude Adjustment Factor

Halt	0	200	400	600	800	1000	1200	1400	1600
AF	1.00	1.00	1.00	1.00	1.02	1.05	1.07	1.10	1.12
Halt	1800	2000	2200	2400	2600	2800	3000	3200	
AF	1.15	1.18	1.21	1.25	1.28	1.32	1.36	1.40	

- Warning: keep any required ventilation openings clear of obstruction;
- Any servicing shall be performed only as recommended by the manufacturer

14. Qualification of workers

Any maintenance, service and repair operations must be required qualification of the working personnel. Every working procedure that affects safety means shall only be carried out by competent persons that joined the training and achieved competence should be documented by a certificate. The training of these procedures is carried out by national training organizations or manufacturers that are accredited to teach the relevant national competency standards that may be set in legislation. All training shall follow the ANNEX HH requirements of UL 60335-2-40 4rd Edition.

Examples for such working procedures are:

- breaking into the refrigerating circuit
- opening of sealed components
- opening of ventilated enclosures

INFORMATION SERVICING (FLAMMABLE MATERIALS)

CHECKS TO THE AREA

Prior to beginning work on systems containing flammable refrigerants, safety checks are necessary to ensure that the risk of ignition is minimized. For repair to the refrigerating system, the following precautions shall be complied with prior to conducting work on the system.

WORK PROCEDURE

Work shall be undertaken under a controlled procedure so as to minimize the risk of a flammable gas or vapor being present while the work is being performed.

GENERAL WORK AREA

All maintenance staff and others working in the local area shall be instructed on the nature of work being carried out. Work in confined spaces shall be avoided.

CHECKING FOR PRESENCE OF REFRIGERANT

- The area shall be checked with an appropriate refrigerant detector prior to and during work, to ensure the technician is aware of potentially flammable atmospheres.
- Ensure that the leak detection equipment being used is suitable for use with flammable refrigerants, i.e. no sparking, adequately sealed or intrinsically safe.

PRESENCE OF FIRE EXTINGUISHER

If any hot work is to be conducted on the refrigeration equipment or any associated parts, appropriate fire extinguishing equipment shall be available to hand. Have a dry powder or CO2 fire extinguisher adjacent to the charging area.

NO IGNITION SOURCE

- No person carrying out work in relation to a refrigeration system which involves exposing any pipe work that contains or has contained flammable refrigerant shall use any sources of ignition in such a manner that it may lead to the risk of fire or explosion.
- All possible ignition sources, including cigarette smoking, should be kept sufficiently far away from the site of installation, repairing, removing and disposal, during which flammable refrigerant can possibly be released to the surrounding space.
- Prior to work taking place, the area around the equipment is to be surveyed to make sure that there are no flammable hazards or ignition risks.
- NO SMOKING signs shall be displayed.

VENTILATED AREA

Ensure that the area is in the open or that it is adequately ventilated before breaking into the system or conducting any hot work. A degree of ventilation shall continue during the period that the work is carried out. The ventilation should safely disperse any released refrigerant and preferably expel it externally into the atmosphere.

CHECKS TO THE REFRIGERANT EQUIPMENT

Where electrical components are being changed, they shall be fit for the purpose and to the correct specification. At all times the manufacturer's maintenance and service guidelines shall be followed. If in doubt consult the manufacturer's technical department for assistance. The following checks shall be applied to installations using FLAMMABLE REFRIGERANTS:

- the actual refrigerant charge is in accordance with the room size within which the refrigerant containing parts are installed;
- the ventilation machinery and outlets are operating adequately and are not obstructed;
- if an indirect refrigerating circuit is being used, the secondary circuits shall be checked for the presence of refrigerant;

– marking to the equipment continues to be visible and legible, marking and signs that are illegible shall be corrected;
– refrigeration pipe or components are installed in a position where they are unlikely to be exposed to any substance which may corrode refrigerant containing components, unless the components are constructed of materials which are inherently resistant to being corroded or are suitably protected against being so corroded.

CHECK TO ELECTRICAL DEVICES

Repair and maintenance to electrical components shall include initial safety checks and component inspection procedures. If a fault exists that could compromise safety, then no electrical supply shall be connected to the circuit until it is satisfactorily dealt with. If the fault cannot be corrected immediately but it is necessary to continue operation, an adequate temporary solution shall be used. This shall be reported to the owner of the equipment so all parties are advised. Initial safety checks shall include:

– that capacitors are discharged: this shall be done in a safe manner to avoid possibility of sparking;
– that there no live electrical components and wiring are exposed while charging, recovering or purging the system;
– that there is continuity of earth bonding.

SEALED ELECTRICAL COMPONENTS SHALL BE REPLACED

- During repairs to sealed components, all electrical supplies shall be disconnected from the equipment being worked upon prior to any removal of sealed covers, etc.

  If it is absolutely necessary to have an electrical supply to equipment during servicing, then a permanently operating form of leak detection shall be located at the most critical point to warn of a potentially hazardous situation.
- Particular attention shall be paid to the following to ensure that by working on electrical components, the casing is not altered in such a way that the level of protection is affected. This shall include damage to cables, excessive number of connections, terminals not made to original specification, damage to seals, incorrect fitting of glands, etc.
  – Ensure that apparatus is mounted securely.
  – Ensure that seals or sealing materials have not degraded such that they no longer serve the purpose of preventing the ingress of flammable atmospheres. Replacement parts shall be in accordance with the manufacturer's specifications.

INTRISICALLY SAFE COMPONENTS MUST BE REPLACED

Do not apply any permanent inductive or capacitance loads to the circuit without ensuring that this will not exceed the permissible voltage and current permitted for the equipment in use. Intrinsically safe components are the only types that can be worked on while live in the presence of a flammable atmosphere. The test apparatus shall be at the correct rating. Replace components only with parts specified by the manufacturer. Other parts may result in the ignition of refrigerant in the atmosphere from a leak.

NOTE: The use of silicon sealant may inhibit the effectiveness of some types of leak detection equipment. Intrinsically safe components do not have to be isolated prior to working on them.

CABLING

Check that cabling will not be subject to wear, corrosion, excessive pressure, vibration, sharp edges or any other adverse environmental effects. The check shall also take into account the effects of aging or continual vibration from sources such as compressors or fans.

DETECTION OF FLAMMABLE REFRIGERANTS

– Under no circumstances shall potential sources of ignition be used in the searching for or detection of refrigerant leaks. A halide torch (or any other detector using a naked flame) shall not be used.
– The following leak detection methods are deemed acceptable for refrigerant systems. Electronic leak detectors may be used to detect refrigerant leaks but, in the case of FLAMMABLE REFRIGERANTS, the sensitivity may not be adequate, or may need re-calibration. (Detection equipment shall be calibrated in a refrigerant-free area.) Ensure that the detector is not a potential source of ignition and is suitable for the refrigerant used. Leak detection equipment shall be set at a percentage of the LFL of the refrigerant and shall be calibrated to the refrigerant employed, and the appropriate percentage of gas (25% maximum) is confirmed. Leak detection fluids are also suitable for use with most refrigerants but the use of detergents containing chlorine shall be avoided as the chlorine may react with the refrigerant and corrode the copper pipe-work.

NOTE Examples of leak detection fluids are:

- **bubble method,**
- **fluorescent method agents.**
  – If a leak is suspected, all naked flames shall be removed/extinguished.
  – If a leakage of refrigerant is found which requires brazing, all of the refrigerant shall be recovered from the system, or isolated (by means of shut of valves) in a part of the system remote from the leak. See the following instructions of removal of refrigerant.

REMOVAL AND EVACUATION

- When breaking into the refrigerant circuit to make repairs or for any other purpose, conventional procedures shall be used. However, it is important that best practice is followed since flammability is a consideration.
- The following procedure shall be adhered to:
  – safely remove refrigerant following local and national regulations;
  – evacuate;
  – purge the circuit with inert gas (optional for A2L);
  – evacuate (optional for A2L);
  – continuously flush or purge with inert gas when using flame to open circuit; and open the circuit;
- The refrigerant charge shall be recovered into the correct recovery cylinders if venting is not allowed by local and national codes. For appliances containing flammable refrigerants, the system shall be purged with oxygen-free nitrogen to render the appliance safe for flammable refrigerants. This process might need to be repeated several times. Compressed air or oxygen shall not be used for purging refrigerant systems.
- For appliances containing flammable refrigerants, refrigerants purging shall be achieved by breaking the vacuum in the system with oxygen-free nitrogen and continuing to fill until the working pressure is achieved, then venting to atmosphere, and finally pulling down to a vacuum (optional for A2L). This process shall be repeated until no refrigerant is within the system (optional for A2L). When the final oxygen-free nitrogen charge is used, the system shall be vented down to atmospheric pressure to enable work to take place.
- The outlet for the vacuum pump shall not be close to any potential ignition sources, and ventilation shall be available.

CHARGING PROCEDURES

In addition to conventional charging procedures, the following requirements shall be followed:

- Works shall be undertaken with appropriate tools only (In case of uncertainty, please consult the manufacturer of the tools for use with flammable refrigerants)
- Ensure that contamination of different refrigerants does not occur when using charging equipment. Hoses or lines shall be as short as possible to minimize the amount of refrigerant contained in them.
- Cylinders shall be kept upright.
- Ensure that the refrigeration system is earthed prior to charging the system with refrigerant.
- Label the system when charging is complete (if not already). Extreme care shall be taken not to overfill the refrigeration system.
- Prior to recharging the system it shall be pressure tested with OFN. The system shall be leak tested on completion of charging but prior to commissioning. A follow up leak test shall be carried out prior to leaving the site.

DECOMMISSIONING

Before carrying out this procedure, it is essential that the technician is completely familiar with the equipment and all its detail. It is recommended good practice that all refrigerants are recovered safely. Prior to the task being carried out, an oil and refrigerant sample shall be taken in case analysis is required prior to re-use of recovered refrigerant. It is essential that electrical power is available before the task is commenced.

- Become familiar with the equipment and its operation.
- Isolate system electrically.
- Before attempting the procedure ensure that:
  - mechanical handling equipment is available, if required, for handling refrigerant cylinders;
  - all personal protective equipment is available and being used correctly;
  - the recovery process is supervised at all times by a competent person;
  - recovery equipment and cylinders conform to the appropriate standards.
- Pump down refrigerant system, if possible.
- If a vacuum is not possible, make a manifold so that refrigerant can be removed from various parts of the system.
- Make sure that cylinder is situated on the scales before recovery takes place.
- Start the recovery machine and operate in accordance with manufacturer's instructions.
- Do not overfill cylinders. (No more than 80% volume liquid charge).
- Do not exceed the maximum working pressure of the cylinder, even temporarily.
- When the cylinders have been filled correctly and the process completed, make sure that the cylinders and the equipment are removed from site promptly and all isolation valves on the equipment are closed off.
- Recovered refrigerant shall not be charged into another refrigeration system unless it has been cleaned and checked.

LABELING

Equipment shall be labeled stating that it has been de-commissioned and emptied of refrigerant. The label shall be dated and signed. For appliances containing FLAMMABLE REFRIGERANTS, ensure that there are labels on the equipment stating the equipment contains FLAMMABLE REFRIGERANT.

RECOVERY

- When removing refrigerant from a system, either for servicing or decommissioning,
- it is recommended good practice that all refrigerants are removed safely.
- When transferring refrigerant into cylinders, ensure that only appropriate refrigerant recovery cylinders are employed. Ensure that the correct number of cylinders for holding the total system charge is available. All cylinders to be used are designated for the recovered refrigerant and labeled for that refrigerant (i.e. special cylinders for the recovery of refrigerant). Cylinders shall be complete with pressure-relief valve and associated shut-of valves in good working order. Empty recovery cylinders are evacuated and, if possible, cooled before recovery occurs.
- The recovery equipment shall be in good working order with a set of instructions concerning the equipment that is at hand and shall be suitable for the recovery of the flammable refrigerant. If in doubt the manufacturer should be consulted. In addition, a set of calibrated weighing scales shall be available and in good working order. Hoses shall be complete with leak-free disconnect couplings and in good condition.
- The recovered refrigerant shall be processed according to local legislation in the correct recovery cylinder, and the relevant waste transfer note arranged. Do not mix refrigerants in recovery units and especially not in cylinders.
- If compressors or compressor oils are to be removed, ensure that they have been evacuated to an acceptable level to make certain that flammable refrigerant does not remain within the lubricant. The compressor body shall not be heated by an open flame or other ignition sources to accelerate this process. When oil is drained from a system, it shall be carried out safely.

TRANSPORTATION, MARKING AND STORAGE FOR UNITS

1. Transport of equipment containing flammable refrigerants
   Compliance with the transport regulations
2. Marking of equipment using signs
   Compliance with local regulations
3. Disposal of equipment using flammable refrigerants
   Compliance with national regulations
4. Storage of equipment/appliances
   The storage of equipment should be in accordance with the manufacturer's instructions.
5. Storage of packed (unsold) equipment
   Storage package protection should be constructed such that mechanical damage to the equipment inside the package will not cause a leak of the refrigerant charge. The maximum number of pieces of equipment permitted to be stored together will be determined by local regulations.

Manufacturer reserves the right to change, at any time, specifications and designs without notice and without obligations.

INDOOR UNIT SIZES

Capacity (Btu/h)	Voltage	Indoor units (Heat Pump / Cooling Only)
9K	115V,-1 phase, 60Hz	45MHHAQ09XC1
12K		45MHHAQ12XC1 / 45MHHAC12XC1
9K	208/230V, 1 phase, 60Hz	45MHHAQ09XC3 / 45MHHAC09XC3
12K		45MHHAQ12XC3 / 45MHHAC12XC3
18K		45MHHAQ18XC3 / 45MHHAC18XC3
24K		45MHHAQ24XC3 / 45MHHAC24XC3
30K		45MHHAQ30XC3
36K		45MHHAQ36XC3

MODEL NUMBER NOMENCLATURE

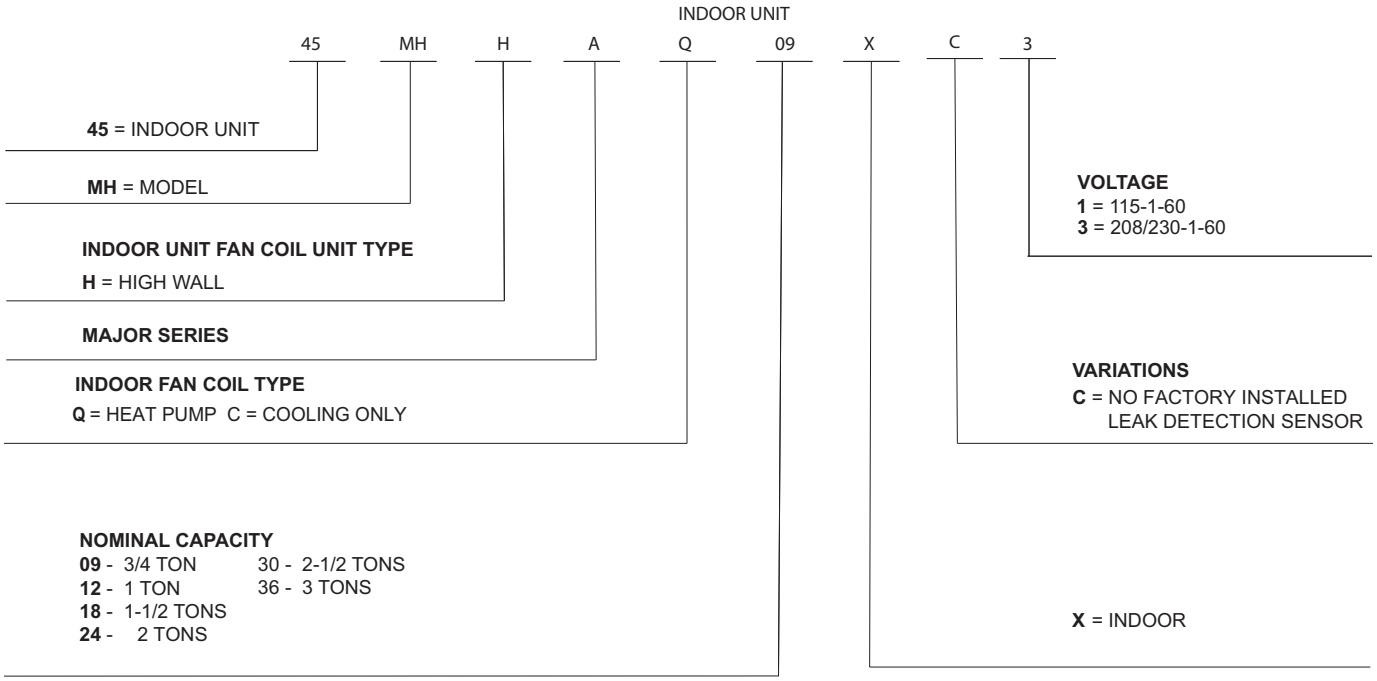

Fig. 1 —Model Number Nomenclature

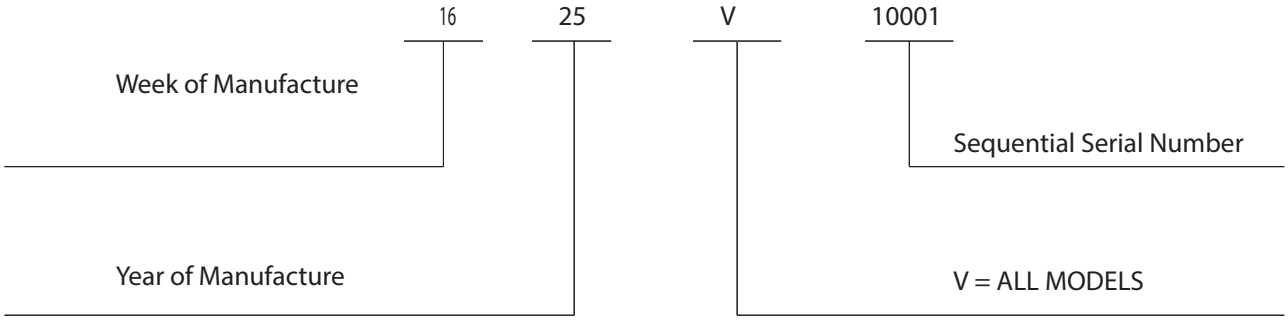

Fig. 2 —Serial Number Nomenclature

Use of the AHRI Certified TM Mark indicates a manufacturer's participation in the program For verification of certification for individual products, go to www.ahridirectory.org.

WIRING

All wires must be sized per NEC (National Electrical Code) or CEC (Canadian Electrical Code) and local codes. Use Electrical Data table MCA (minimum circuit amps) and MOCP (maximum over current protection) to correctly size the wires and the disconnect fuse or breakers respectively.

Recommended Connection Method for Power and Communication Wiring

The main power is supplied to the outdoor unit. The field supplied 14/3 stranded wire with ground with a 600 volt insulation rating, power/communication wiring from the outdoor unit to the indoor unit consists of four (4) wires and provides the power for the indoor unit.

Two wires are line voltage AC power, one is communication wiring (S) and the other is a ground wire. Wiring between the indoor and outdoor unit is polarity sensitive. The use of BX wire and solid core wire is NOT recommended.

If installed in a high Electromagnetic field (EMF) area and a communication issues exists, a 14/2 stranded shielded wire can be used to replace L2/N and (S) between the outdoor unit and the indoor unit landing the shield onto the ground in the outdoor unit only.

⚠ CAUTION

EQUIPMENT DAMAGE HAZARD

Failure to follow this caution may result in equipment damage or improper operation. Size the wires in accordance with NEC and local codes.

⚠ CAUTION

EQUIPMENT DAMAGE HAZARD

Failure to follow this caution may result in equipment damage or improper operation.

Be sure to comply with local codes while running wire from the indoor unit to the outdoor unit.

Every wire must be connected firmly. Loose wiring may cause the terminal to overheat or result in unit malfunction. A fire hazard may also exist. Ensure all wiring is tightly connected.

No wire should touch the refrigerant tubing, compressor or any moving parts.

Disconnecting means must be provided and shall be located within sight and readily accessible from the air conditioner.

Connecting cable with conduit shall be routed through the hole in the conduit panel.

CONNECTION DIAGRAMS

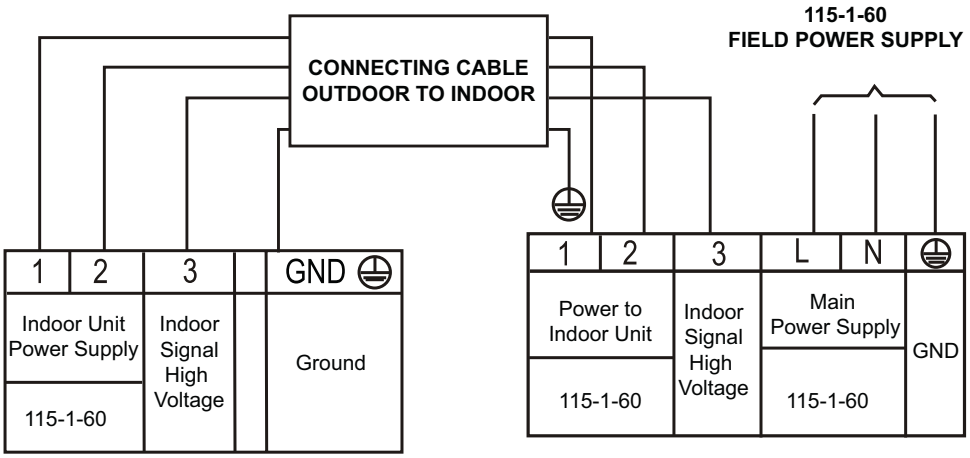

Fig. 3 —Connection Diagram Sizes 09K - 12K (115V)

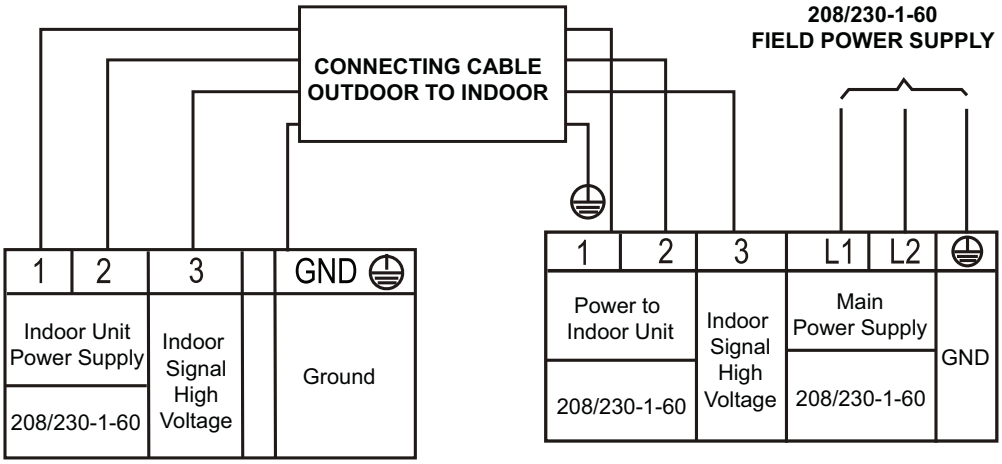

Fig. 4 —Connection Diagram Sizes 09K - 36K (208/230V)

NOTES:

1. Do not use a thermostat wire for any connection between the indoor and outdoor units.
2. All connections between the indoor and outdoor units must adhere to the connections shown in figures 3 and 4. The connections are polarity sensitive and improper wiring will result in a fault code.

WIRING DIAGRAMS

WIRING DIAGRAM - Heat Pump

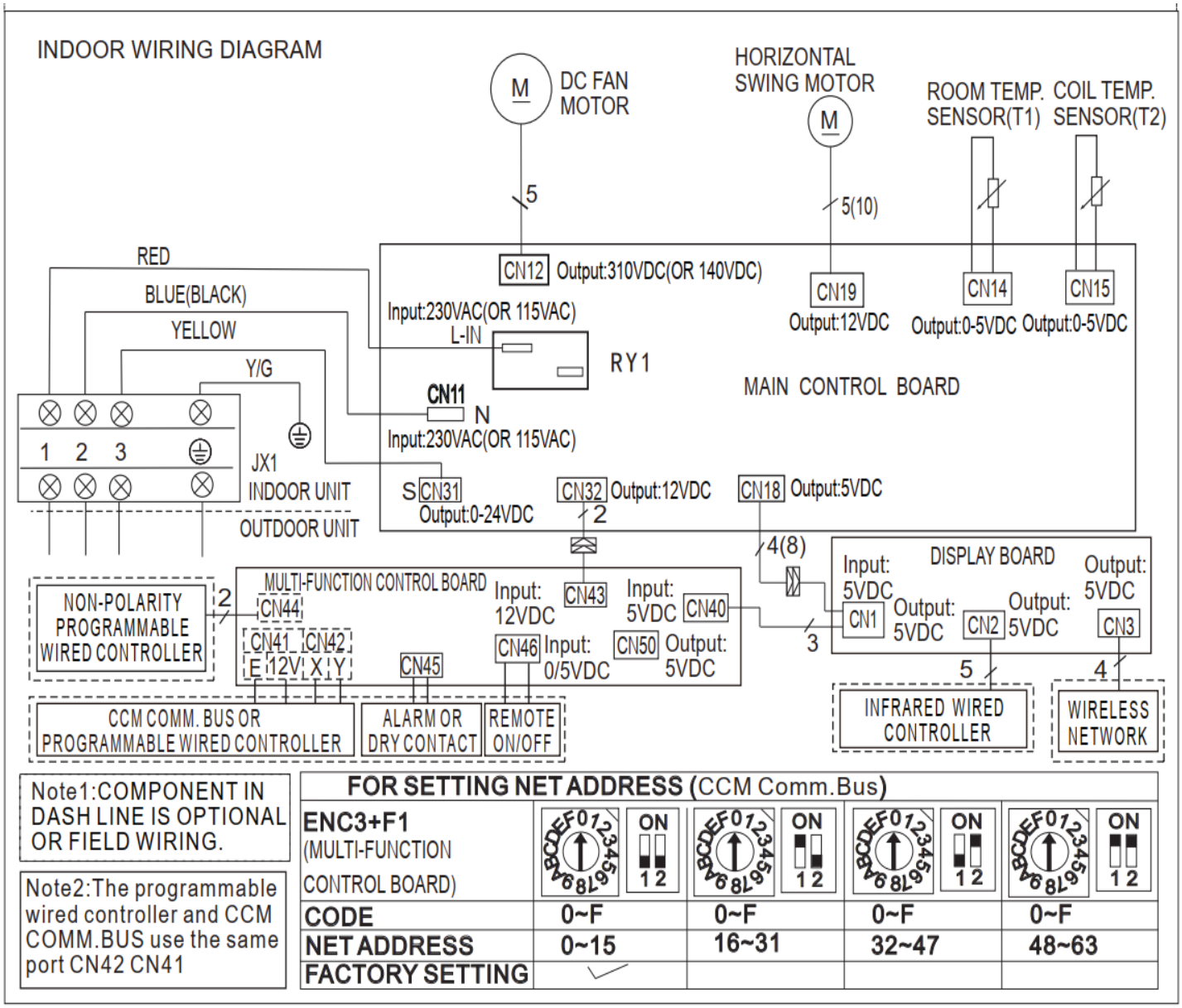

Fig. 5 — Sizes 09K, 12K, 18K (Heat Pump)

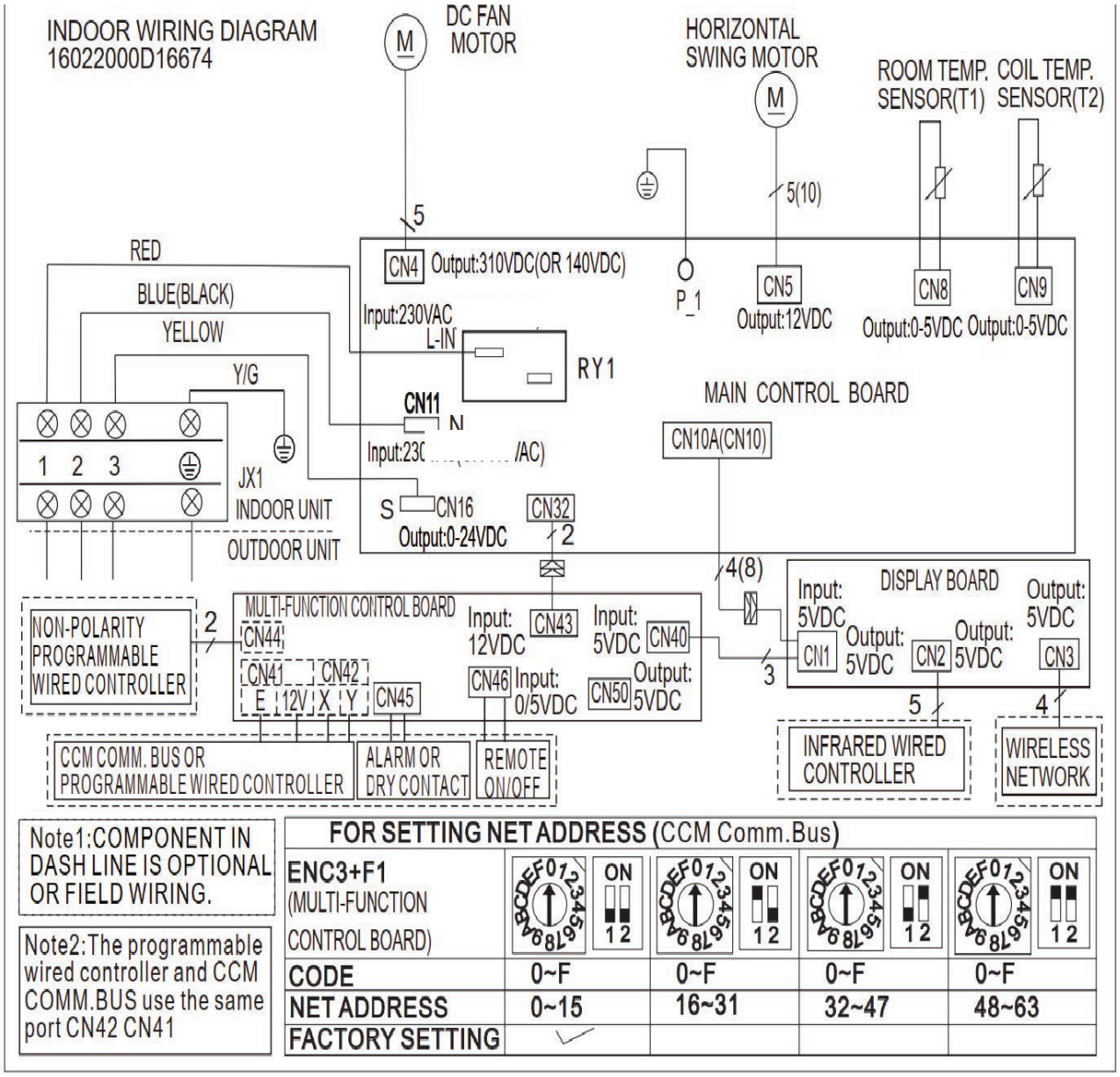

Fig. 6 — Sizes 24K, 30K, 36K (Heat Pump)

WIRING DIAGRAMS - Cooling Only

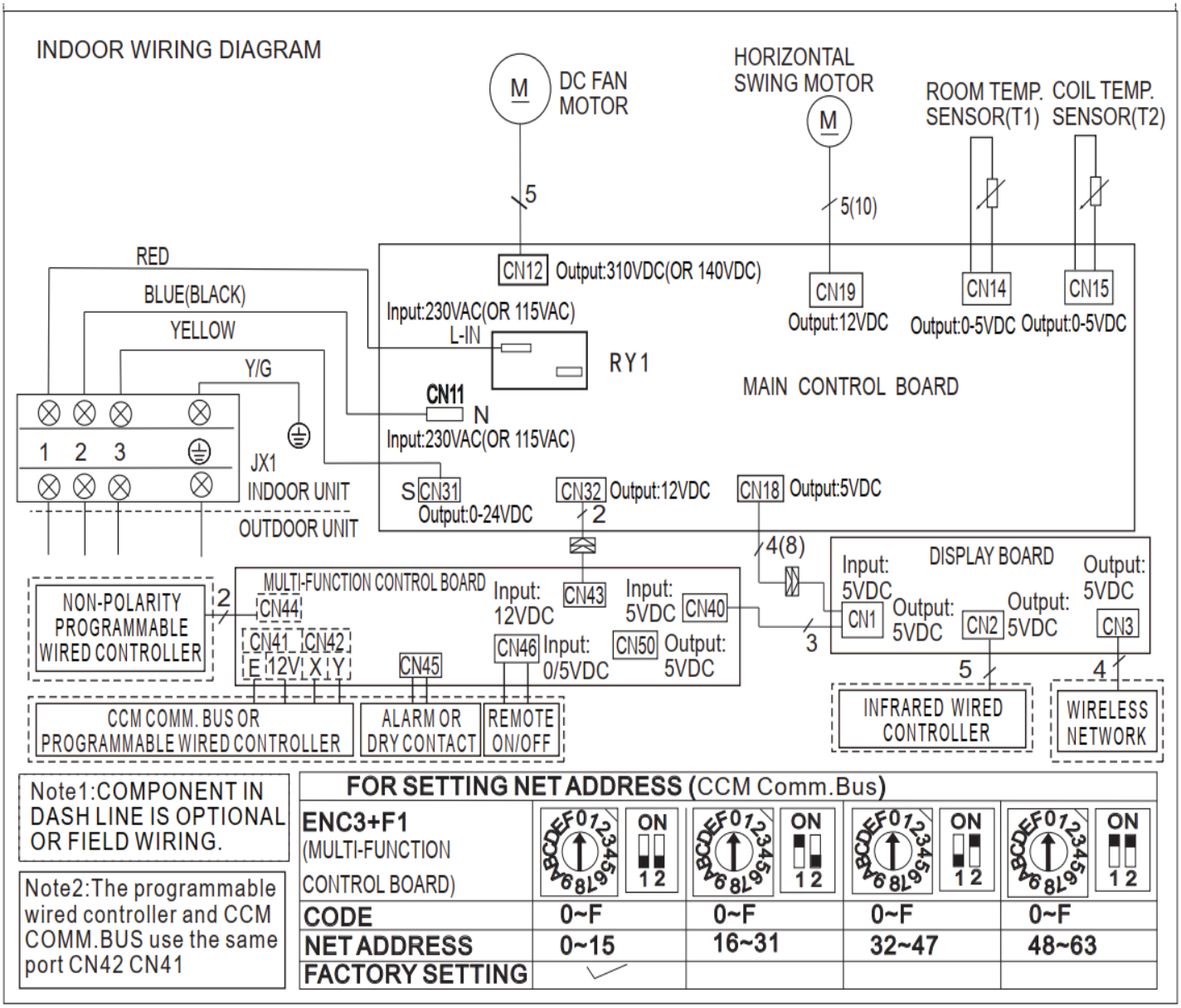

Fig. 7 — Wiring Diagram Sizes 9K, 12K and 18K (Cooling Only)

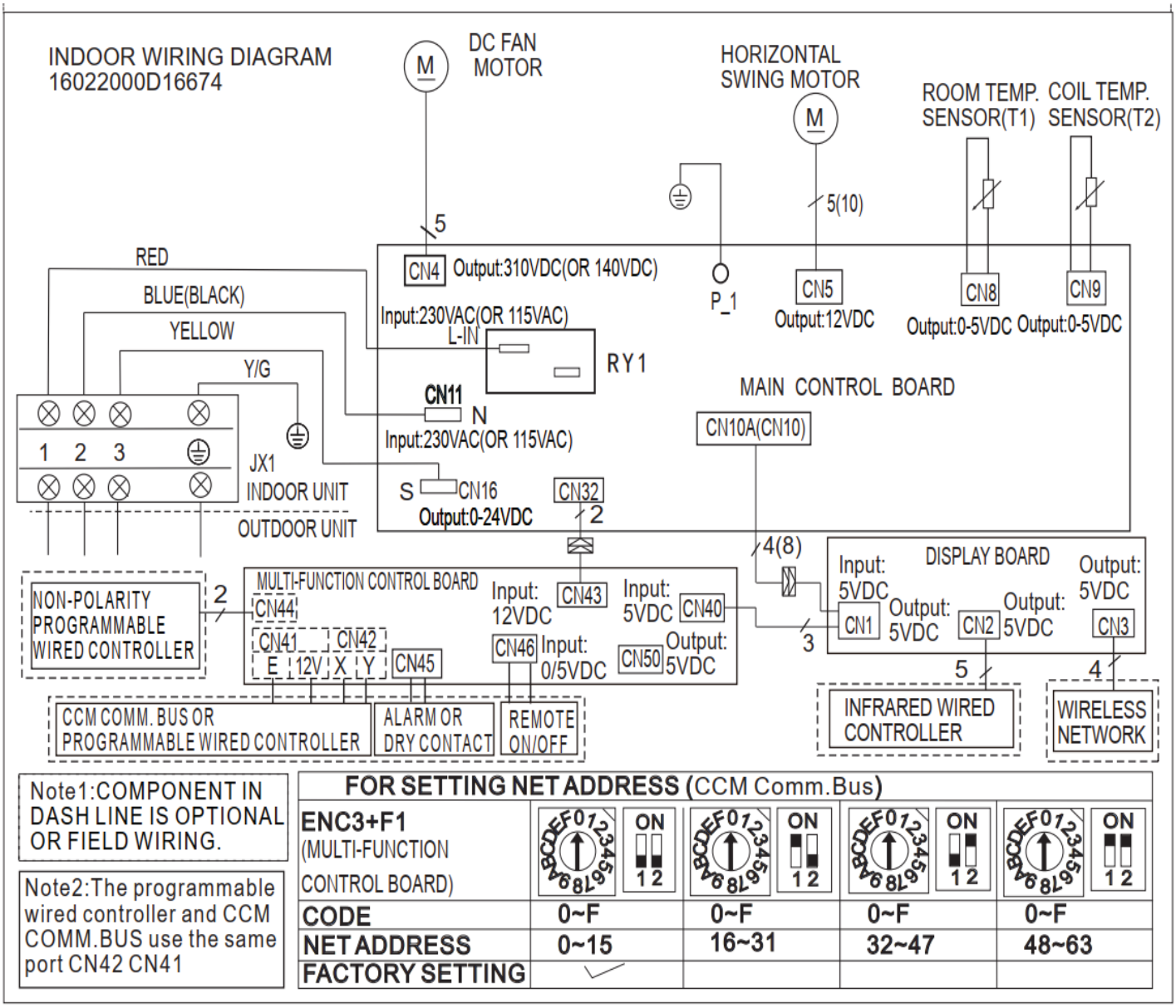

Fig. 8 — Wiring Diagram Size 24K (Cooling Only)

REFRIGERANT CYCLE DIAGRAMS

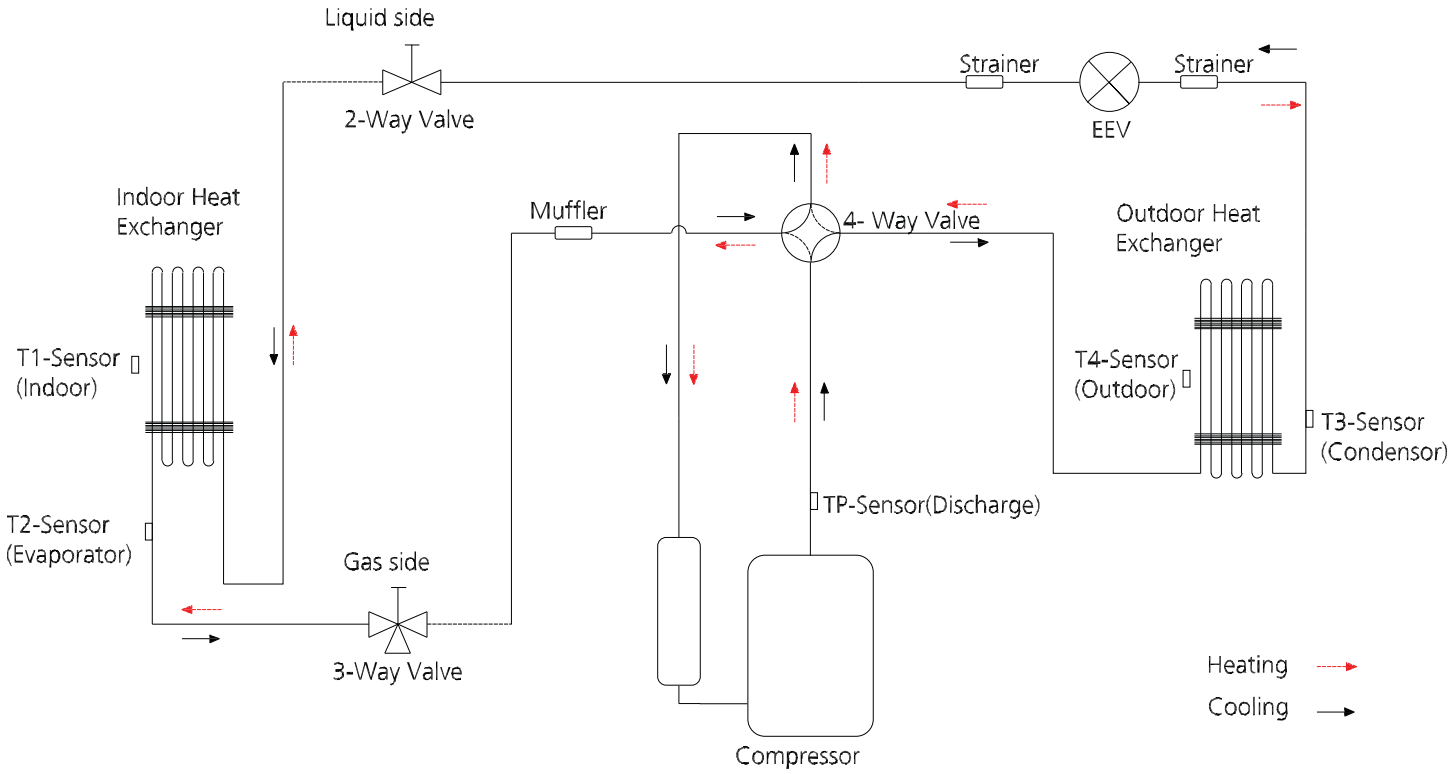

Fig. 9 —9K, 12K, 115V

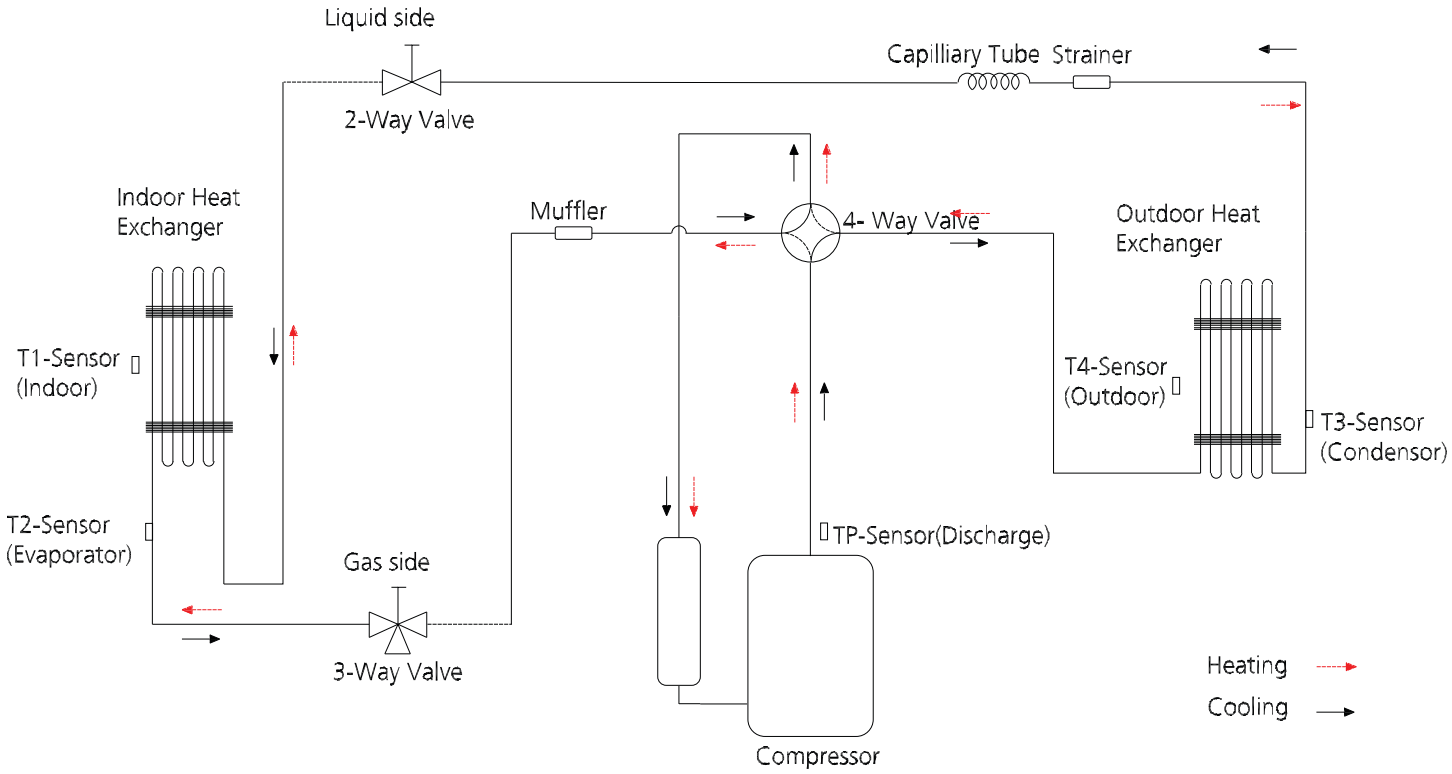

Fig. 10 —9K, 12K, 230V

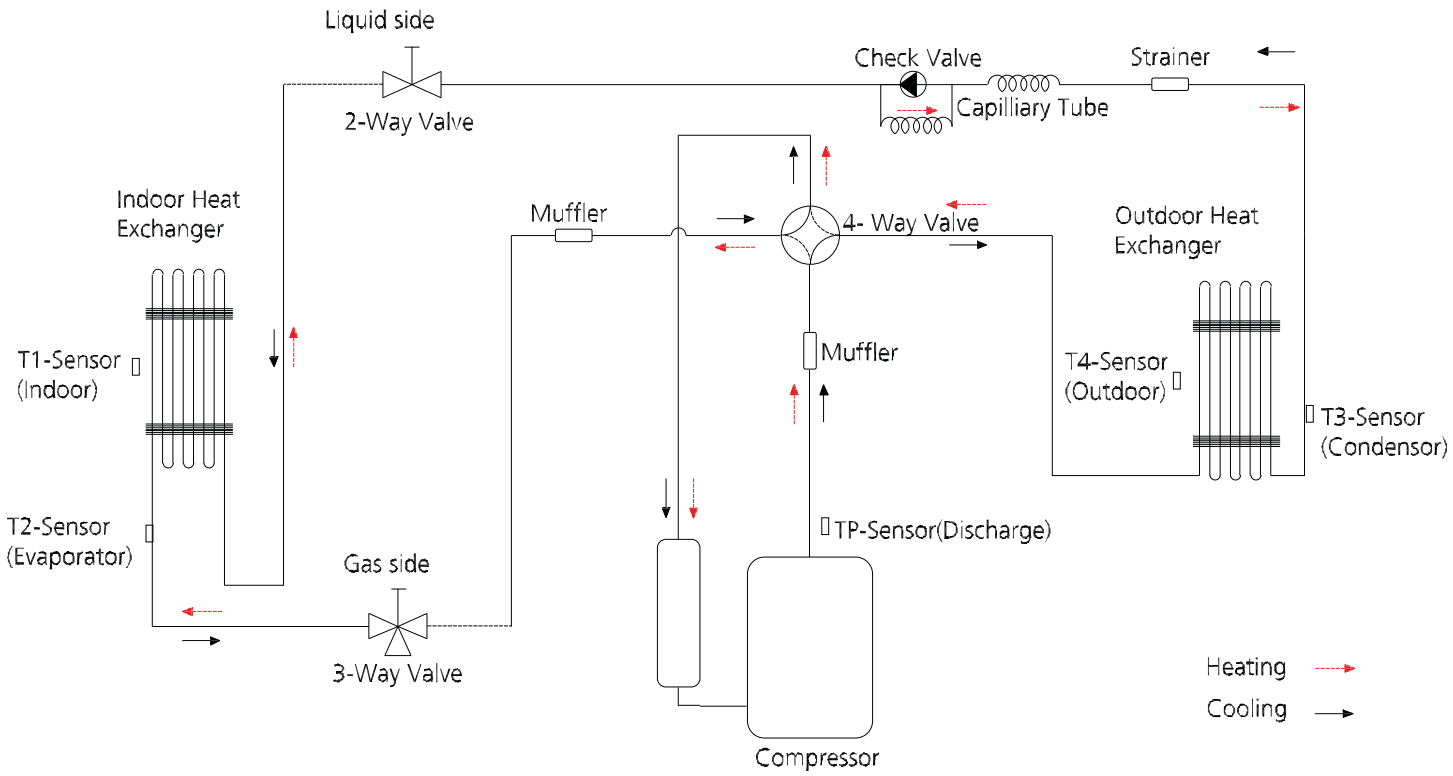

Fig. 11 —18K

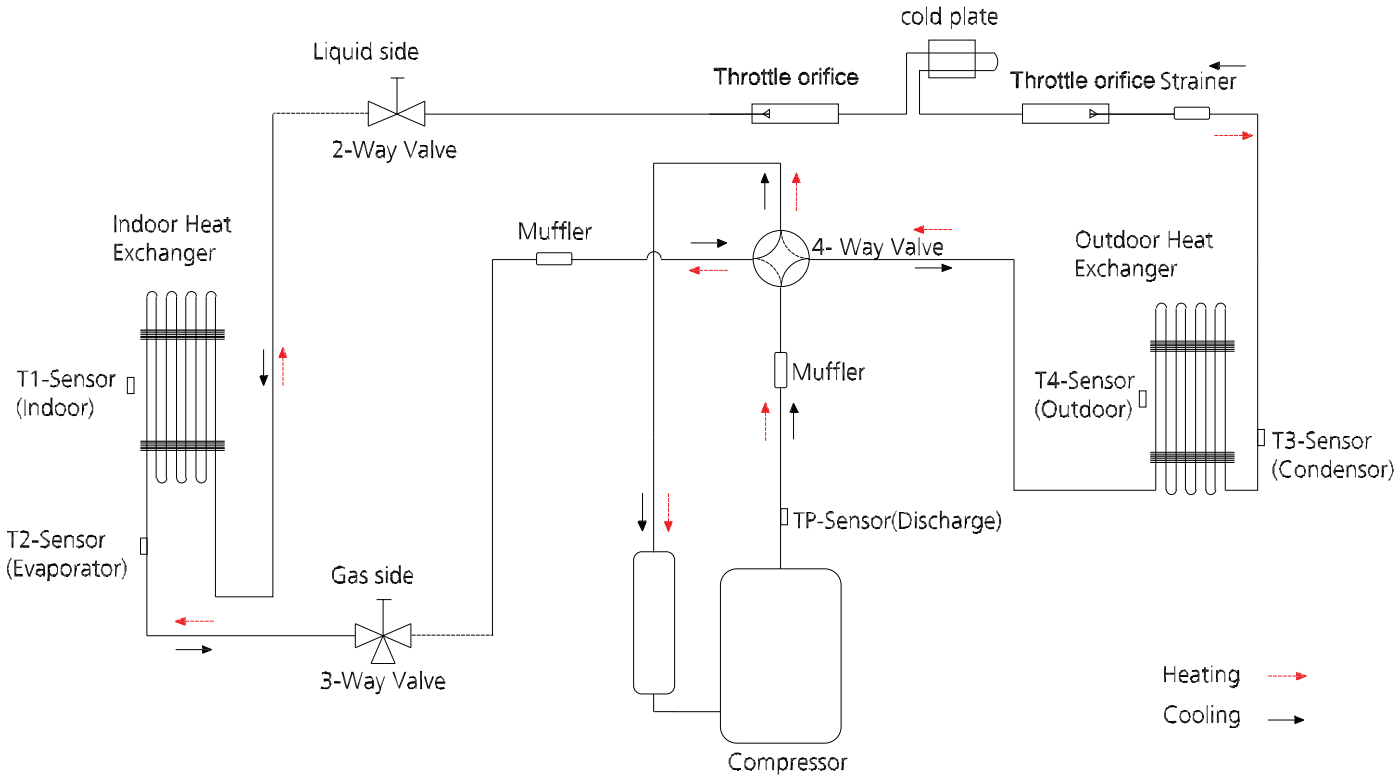

Fig. 12 —24K

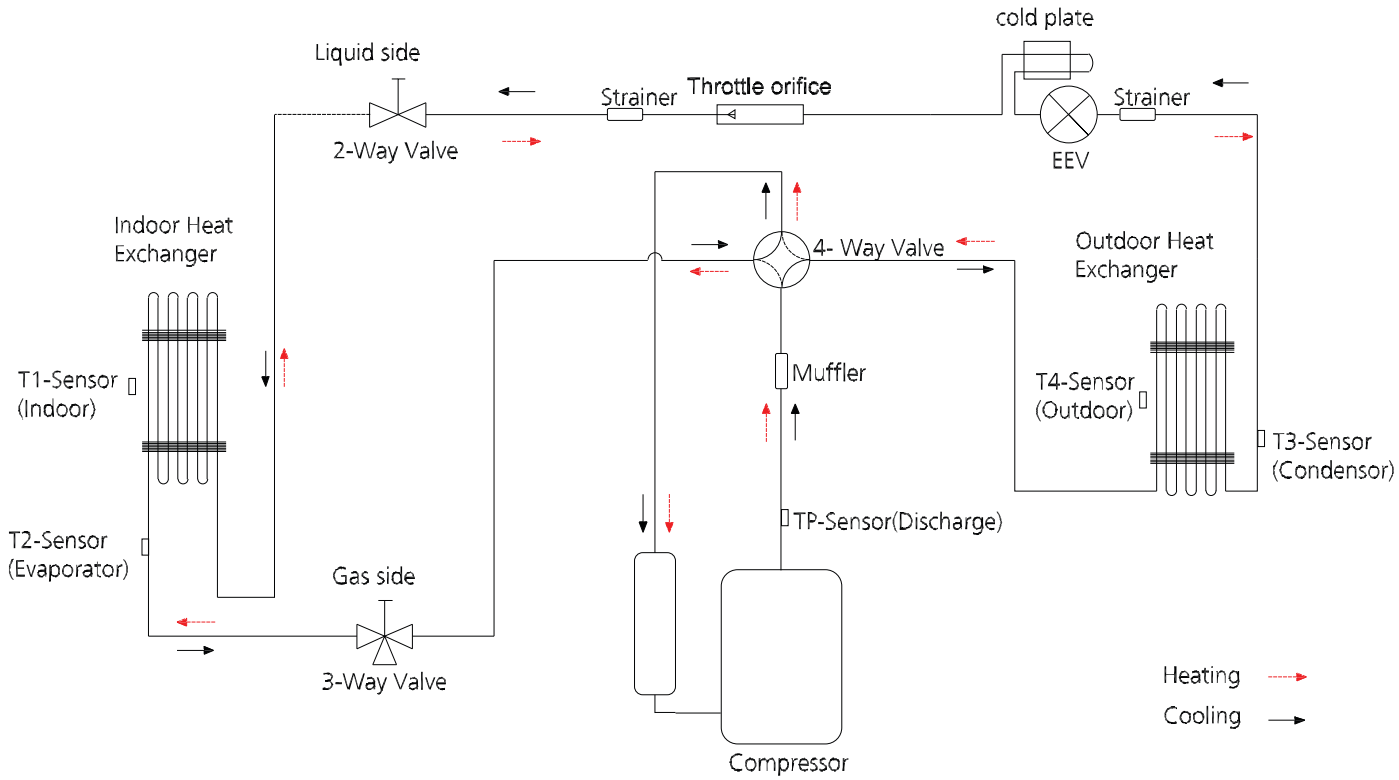

Fig. 13 —30K

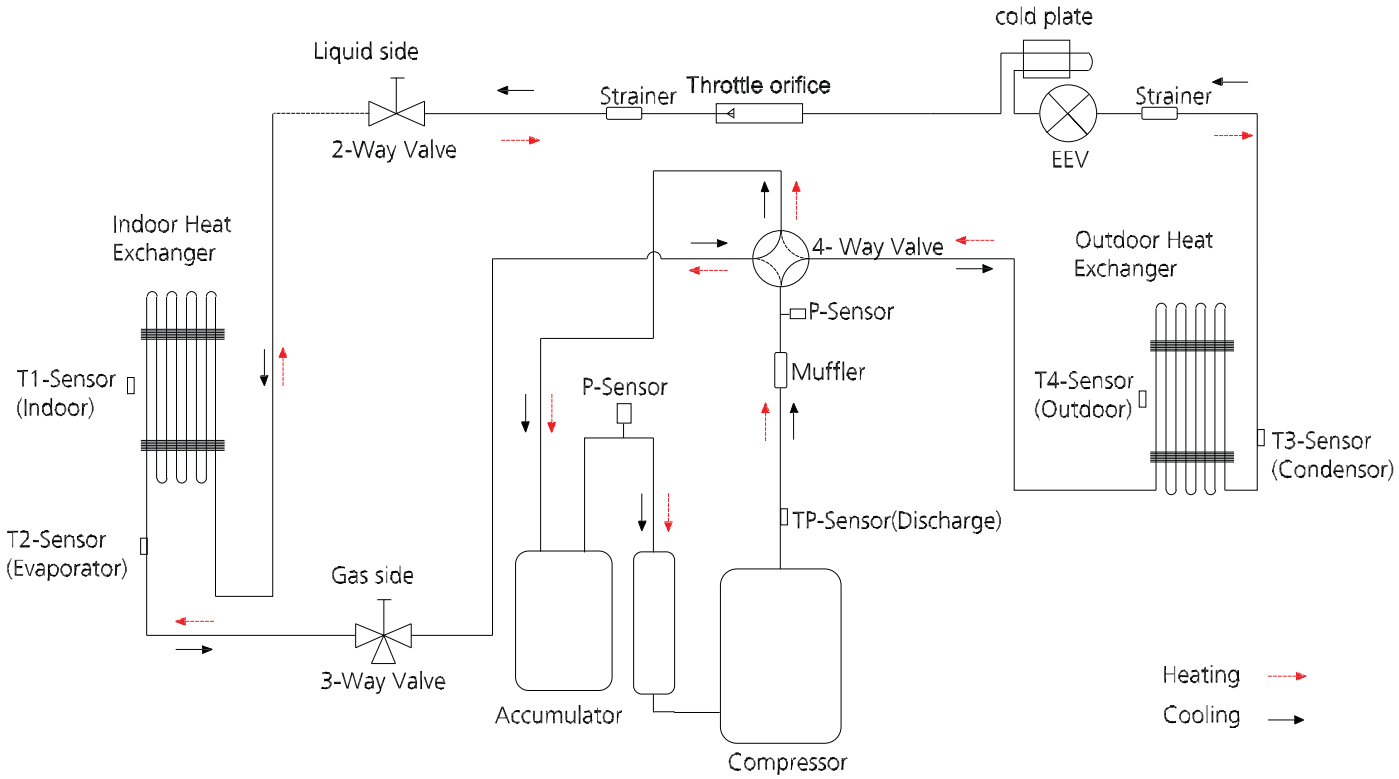

Fig. 14 —36K

ELECTRONIC FUNCTIONS

Main Protection

Fan Speed is Out of Control

When the indoor fan speed remains too low (300RPM) for a certain amount of time, the unit stops and the LED displays the failure.

Indoor Fan Delayed Open Function

When the unit starts up, the louver becomes active immediately and the indoor fan opens 7 seconds later. If the unit runs in the HEATING mode, the indoor fan falls under the control of the anti-cold wind function.

Zero Crossing Detection Error Protection

If the unit detects that the time interval is not correct for a continuous period of 240s, the unit stops and the LED displays the failure. The correct zero crossing signal time interval should be between 6-13ms.

Sensor Protection at Open Circuit and Breaking Disconnection

When there is only one malfunctioning temperature sensor, the air conditioner keeps working however an error code appears, in the event of emergency use. When there is more than one malfunctioning temperature sensor, the unit stops working.

Operation Modes and Functions

FAN Mode

1. Outdoor fan and compressor stop
2. Temperature setting function is disabled, and no setting temperature appears
3. Indoor fan can be set to high/med/low/auto
4. The louver operates the same in the COOLING mode
5. Auto fan

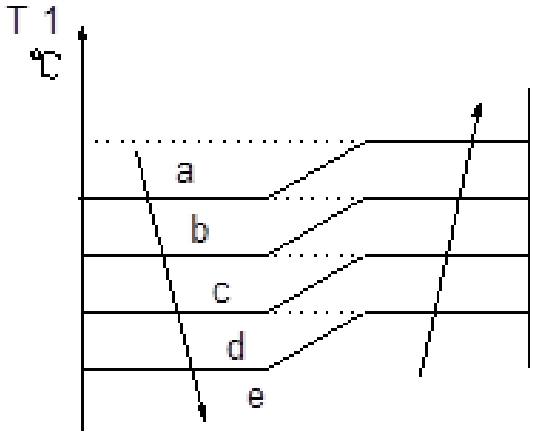

Fig. 15 —FAN Mode, Auto Fan

COOLING Mode

Indoor Fan Running Rules

In the COOLING mode, the indoor fan runs continually and either speed (high, medium, low or auto) may be selected. When the setting temperature is reached, if the compressor stops running, the indoor fan motor runs at the minimum or setting speed. The indoor fan is controlled by the rules shown in Fig. 6.

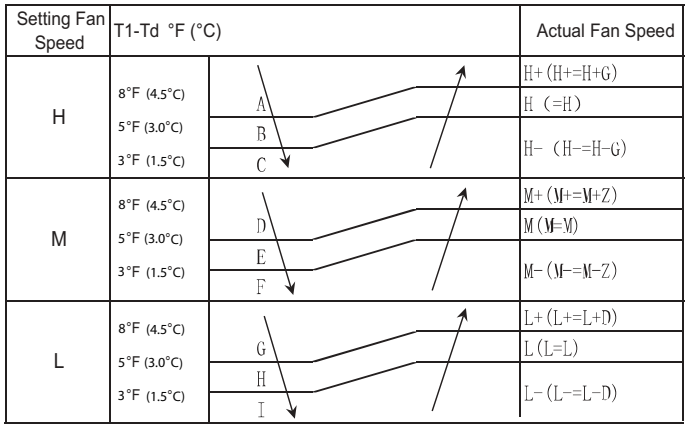

Fig. 16 —Cooling, Indoor Fan Running Rules

The AUTO fan is controlled by the rules shown in Fig. 7.

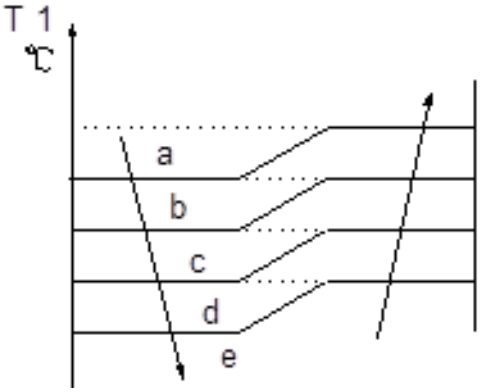

Fig. 17 —Auto Fan, Indoor Fan Running Rules

Evaporator Temperature Protection

When the evaporator temperature is lower than the setting value, the compressor stops.

HEATING Mode

Indoor Fan Running Rules

When the compressor is on, the indoor fan can be set to high/med/low/auto/mute. When the indoor unit coil temperature is low, the anti-cold air function starts and the indoor fan motor runs at a low speed and the speed cannot be changed. When the temperature is lower than the setting value, the indoor fan motor stops.

When the indoor temperature reaches the setting temperature, the compressor stops and the indoor fan motor runs at the minimum or setting speed (the anti-cold air function is valid). The indoor fan is controlled by the Indoor Fan Running Rules shown in Fig. 8.

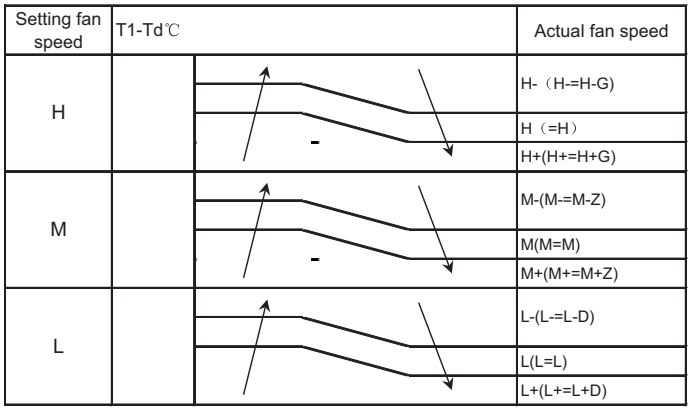

Fig. 18 —Heating, Indoor Fan Running Rules

Auto Fan Action in HEATING Mode

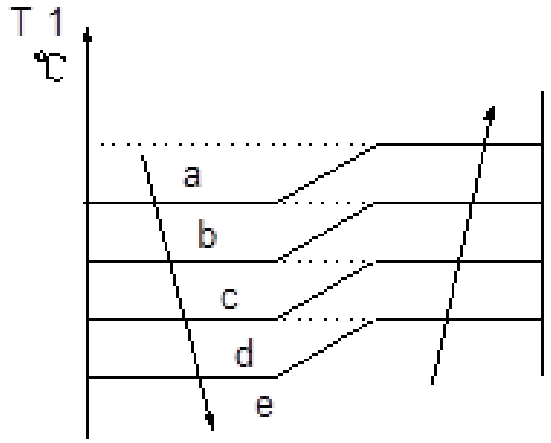

Fig. 19 —Auto Fan Action in HEATING Mode

DEFROST Mode

The unit enters the DEFROST mode according to the T3 temperature value and the T3 temperature change value range plus the compressor running time. During the DEFROST mode, the compressor continues to run, the indoor and outdoor motors stop, and the indoor unit displays "df".

If any one of the following items is satisfied, the defrosting process finishes and the unit reverts to the normal HEATING mode.

----T3 rises higher than TCDE1C.

----T3 remains higher than TCDE2C for 80 seconds.

----The unit runs for 15 minutes in DEFROSTING mode.

Evaporator Coil Temperature Protection

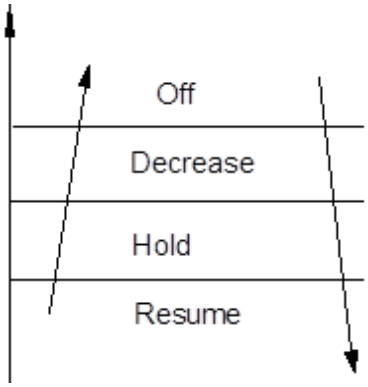

Fig. 20 —Evaporator Coil Protection - Cooling Mode

NOTE: The following (bulleted list) applies to Fig. 10:

- Off: Compressor stops
- Decrease: Decrease the running frequency to the lower level
- Hold: Keep the current frequency
- Resume: No limitation for frequency

When the evaporator temperature is higher than the setting protection value, the compressor stops.

AUTO-MODE

This mode can be selected with the remote controller and the temperature setting can be adjusted between 61°F (16°C) ~ 86°F (30°C).

In auto mode, the machine selects cooling, heating or fan-only mode on the basis of T1,Ts and Outdoor ambient temperature (T4).

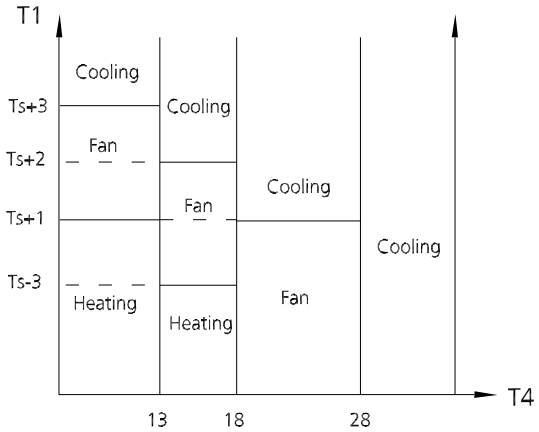

Fig. 21 —Auto-Mode

DRY Mode

Indoor Fan Speed is Set

The indoor fan speed is set to BREEZE and cannot be changed. The louver angle is the same as in the COOLING mode.

Low Indoor Room Temperature Protection

In the DRY mode, if the room temperature is lower than 50°F (10°C), the compressor stops and will not resume until the room temperature exceeds 53.6°F (12°C).

Evaporator Anti-Freezing Protection

The evaporator anti-freezing protection condenser high temperature protection and outdoor unit frequency limit are active and both are the same when the unit is in the COOLING mode.

Outdoor Fan

The outdoor fan operates the same when the unit is in the COOLING mode.

FORCED OPERATION Function

When the unit is off, locate the FORCED AUTO button. The button can be accessed by opening the front panel. The button is on the right side inside the terminal cover and can be pressed with a long slender screw driver. Press FORCED AUTO to engage the FORCED AUTO mode.

Press FORCED AUTO again within 5 seconds to engage the FORCED COOLING mode. In the FORCED AUTO, FORCED COOLING or any other operation mode, press FORCED AUTO to turn the unit off.

• FORCED OPERATION mode: In the FORCED OPERATION mode, all the general protections and the remote control are available.

Operation Rules

• FORCED COOLING mode: The compressor runs at the F2 frequency and the indoor fan runs in the BREEZE mode. After running for 30 minutes, the unit enters the AUTO mode at the 75.2°F (24°C) setting temperature.

• FORCED AUTO mode: The FORCED AUTO mode is the same as the normal AUTO mode with a 75.2°F (24°C) setting temperature.

Manufacturer reserves the right to change, at any time, specifications and designs without notice and without obligations.

Timer Function

Timing range is 24 hours

Timer on: The unit turns on automatically when reaching the setting time.

Timer off: The unit turns off automatically when reaching the setting time.

Timer on/off: The unit turns on automatically when reaching the setting "on" time, and then turns off automatically when reaching the setting "off" time.

Timer off/on: The unit turns off automatically when reaching the setting "off" time, and then turns on automatically when reaching the setting "on" time. The timer function will not change the unit's current operation mode. Suppose the unit is off now; it will not start up first after setting the "timer off" function. When the setting time is reached, the timer LED turns off and the unit's running mode is the same. The setting time is relative time.

The unit exits the timer function if it experiences a malfunction.

Sleep Function

The SLEEP function is only available in the COOLING, HEATING or AUTO mode.

The OPERATION process in the SLEEP mode is as follows:

• When cooling, the setpoint rises 2°F (1°C) (to a maximum of 86°F/ 30°C) every one hour. Two (2) hours later, the room temperature stops rising and the indoor fan remains at a low speed.

• When heating, setpoint decreases 2°F (1°C) (to a minimum of 62°F)/ 17°C) every one hour. Two (2) hours later, the setpoint stops decreasing and the indoor fan is set at the low speed.

NOTE: Anti-cold wind function has the priority.

Operation time in the SLEEP mode is seven (7) hours. After seven (7) hours, the unit exits the SLEEP mode and powers off.

AUTO-RESTART Function

The indoor unit is equipped with an AUTO-RESTART function, which is carried out through an auto-restart module. In the event of a sudden power failure, the module memorizes the setting conditions prior to the power failure. The unit resumes the previous operation setting (not including the SWING function) automatically three (3) minutes after the power returns.

If the memorization condition is the FORCED COOLING mode, the unit runs in the COOLING mode for 30 minutes and switches to the AUTO mode at the 75°F (24°C) setpoint. If the unit is off before the power turns off and the unit is required to start up, the compressor delays the start up for 1 minute before powering on. In other instances, the compressor waits three (3) minutes before restarting.

Refrigerant Leak Detection

NOTE: This indoor unit is NOT equipped with a refrigerant dissipation sensor.

With this technology, the display area displays "EL 0C" when the outdoor unit detects a refrigerant leak. This function is only active in the COOLING mode. This function helps to prevent the compressor from being damaged by a refrigerant leak or a compressor overload.

• Open Condition: When the compressor is running, the value of the T2 coil temperature sensor has no to very little change.

Louver Position Memory Function

When starting the unit again after powering down, the louver returns to the angle originally set by the user, however the precondition is that the angle must be within the allowable range. If the angle exceeds the allowable range, it memorizes the maximum angle of the louver. During operation, if the power fails or if the end user shuts down the unit while in the TURBO mode, the louver returns to the default angle.

46°F (8°C) Heating

To access 46°F heating, turn the heating temperature down to the lowest setting with the wireless remote. After reaching the lowest setting press the down arrow on the remote two more times then FP appears on the indoor unit. When the compressor is running, the indoor fan motor runs without the ANTI-COLD air function. When the compressor is off, the indoor fan motor is off.

Silence Operation

Press SILENCE on the remote control to initiate the SILENCE function.

When the SILENCE function is activated, the compressor running frequency remains lower than F2 and the indoor unit emits a faint breeze, which reduces the noise to the lowest level and creates a quiet and comfortable space for the user.

Self Clean (For heat pump models which are provided with this function)

After running in the COOLING or DRYING mode, if the user presses "Self Clean" on the remote control, the indoor unit runs in the FAN ONLY mode momentarily, then the low heat operation and finally runs in FAN ONLY again. This function can keep the inside of the indoor unit dry and prevents mold from growing within the unit.

FOLLOW ME

To activate FOLLOW ME with the remote, press SET and scroll to display the FOLLOW ME icon then push OK. To lock in FOLLOW ME after it has been activated, hold BOOST down on the remote for 8 seconds. The remote displays the ON icon to indicate that FOLLOW ME is locked in. Afterwards, the mode of operation can be changed with FOLLOW ME still active. If the indoor PCB receives the signal, which results from pressing FOLLOW ME on the remote control, the buzzer emits a sound which indicates the FOLLOW ME function is initiated. However, when the indoor PCB receives a signal from the remote control every 3 minutes, the buzzer will not respond.

When the unit is running with the FOLLOW ME function, the PCB controls the unit according to the temperature from the FOLLOW ME signal, and the temperature collection function of the room temperature sensor is shielded. However the room temperature sensor's error detective function remains valid.

When the FOLLOW ME function is available, the PCB controls the unit according to the room temperature from the remote control and the setting temperature. The PCB responds to the mode change information received from the remote control signal, however it will not be affected by the setting temperature.

When the unit is in the FOLLOW ME mode, if the PCB does not receive a signal from the remote control for 7 minutes or after pressing FOLLOW ME again, the FOLLOW ME function turns off automatically, and the temperature controls the unit according to the room temperature detected from its own room temperature sensor and setpoint.

INQUIRY MODE

Accessing the INQUIRY Mode

⚠ CAUTION

Read and understand the function changes you wish to make in advance. Neither the indoor unit nor the remote control displays the new level of any of the changes made while in the INQUIRY mode. Be sure to document the changes you've made to the system's programming using the INQUIRY mode. Once you complete the changes and exit the INQUIRY mode, if additional changes are made to the programming, the system will not show the new previously set level(s).

For example, when you first access CODE 22, Heating Temperature Compensation, the remote control display defaults to 0. If you change it to -2, then save and exit out of the INQUIRY mode, the next time someone goes back in and accesses CODE 22, the remote's display will not display -2.

Instead it will show 0 because that's the default. If you are unsure of the previous changes, due to a lack of documentation, you could press the DOWN symbol to the maximum change range of -6, then press the UP symbol until you are back to 0, and make the new adjustments accordingly. Be sure to document the changes when you are done.

1. Simultaneously press ON/OFF and FAN SPEED for 8 seconds.
   a. The remote is now in the INQUIRY mode.
   b. The remote control remains in the INQUIRY mode for 1 minute if no other button is pressed.
   c. While in the INQUIRY Mode, the remote display cancels all icons except AUTO, COOL, DRY, HEAT and Battery Strength.
   d. The remote control digital display defaults to 0 upon entering the INQUIRY mode.
   e. In the INQUIRY mode, each digital code (from 0 to 30) is accessed by pressing the UP or DOWN arrows .
   f. The INQUIRY information appears on the high wall indoor unit display in approximately 1 second after accessing the digital code. Press OK to send as well.
   g. In the INQUIRY mode, all other buttons and operations are invalid except for UP, DOWN and OK or the operation to exit the INQUIRY mode.

Remote Controller Service Mode Functions

NOTE: While in the INQUIRY mode, refer to the following instructions to enter SERVICE mode for the applicable codes.

Below is a list of INQUIRY modes and serviceable functions.

a. Before using the remote's service functions, turn OFF the indoor unit with the remote.
b. Turn OFF the power to the outdoor unit for 2 minutes. Turn the power back ON.
c. Remove the batteries from the remote and wait for the remote screen to clear. Within 30 seconds of replacing the batteries, use UP or DOWN to scroll through the INQUIRY modes.
d. To enter the SERVICE mode for an applicable INQUIRY mode, press ON/OFF for 2 seconds.
e. After SERVICE adjustments have been made, press ON/OFF for 2 seconds to exit the SERVICE mode and return to the INQUIRY mode.
f. Once operations in the INQUIRY mode are complete, press ON/OFF and FAN SPEED for 2 seconds to exit. All buttons on the remote controller are disabled for 60 seconds
g. To ensure changes are locked, power down the outdoor unit for three (3) minutes after all the service mode changes are made.

Service Inquiry Codes

CODE	INQUIRY	INQUIRY DESCRIPTION	SERVICE/ INQUIRY	FOR SERVICE, PRESS ON/OFF FOR 2 SECONDS TO:	SELECTION GUIDE/NOTES
0		Error Code Check	SERVICE AND INQUIRY	Review error memory function. Displays "**Ch**". Press **OK** to send the query error code memory.	
1	T1	Indoor Ambient Temperature	SERVICE AND INQUIRY	Change the power off memory selection. This feature determines whether the unit memorizes the set conditions prior to a power failure. Displays **"Ch"**. Press **OK** to return the current setting. Press **UP** or **DOWN** to cycle through settings **1** and **0**.	Memory settings are off Memory settings are on
2	T2	Indoor Coil Temperature	SERVICE AND INQUIRY	Change the option to control the indoor fan operation after reaching the set temperature. Displays "**Ch**". Press **OK** to return the current setting. Press **UP** or **DOWN** to cycle through settings 1 through 11. Next, press **OK** to confirm the selection.	Stop the fan Minimum fan speed Set speed - intermittent fan-off 4 minutes/on 1 min Terminate after run time of 10 mins Terminate after run time of 15 mins Terminate after run time of 20 mins Terminate after run time of 30 mins Terminate after run time of 40 mins Terminate after run time of 50 mins Terminate after run time of 60 mins
3	T3	Outdoor Coil Temperature	SERVICE AND INQUIRY	Change the option to control the **COOLING** and **HEATING** modes available for use on the unit. Press **UP** or **DOWN** to cycle through the settings **CH**, **HH**, **CC** or **nU**. Press **OK** to confirm.	**CH** - **COOLING** and **HEATING**: **AUTO**, **COOLING**, **DRY**, **HEATING** and **FAN** modes available **HH** - **HEATING** Only: **HEATING** and **FAN** modes available **CC** - **COOLING** without **AUTO**: **COOLING**, **DRY** and **FAN** modes available **nU** - **COOLING** and **HEATING** without **AUTO**: **COOLING**, **DRY**, **HEATING** and **FAN** modes available
4	T4	Outdoor Ambient Temperature	SERVICE AND INQUIRY	Change the selection of the lowest set temperature. NOTE: Temperature range is 60°F ~ 75°F (16°C ~ 24°C). Press **UP** or **DOWN** to select temperature setting. Press **OK** to confirm.	
5	TP (T5)	Compressor Discharge Temperature	SERVICE AND INQUIRY	Change the selection of the highest set temperature. NOTE: Temperature range is 77°F ~ 86°F (25°C ~ 30°C). Press **UP** or **DOWN** to select the temperature setting. Press **OK** to confirm.	
6	FT	Compressor target frequency	INQUIRY ONLY		
7	Fr	Compressor run frequency	INQUIRY ONLY		
8	dL	Unit amperage	SERVICE AND INQUIRY	Change the static pressure selection. Displays "**Ch**". Press **OK** to return the current setting. Press **UP** or **DOWN** to cycle through settings **0** through **4** or **AF** (constant air volume test). Press **OK** to confirm.	Only available on ducted air handler units. Refer to the ducted air handler installation manuals for Fan performances at varying static pressures for airflow settings.
9	Uo	Unit voltage	INQUIRY ONLY		
10	Sn	Capacity test (special usage)	INQUIRY ONLY		
11	----	Not available	INQUIRY ONLY		
12	Pr	Indoor fan speed	SERVICE AND INQUIRY	Change the heating frequency lower limit selection. Displays "**Ch**". Press **OK** to return the current heating minimum frequency limit selection code. Press **UP** and **DOWN** to select the minimum heating frequency limit value. Press **OK** to confirm.	

Manufacturer reserves the right to change, at any time, specifications and designs without notice and without obligations.

CODE	INQUIRY	INQUIRY DESCRIPTION	SERVICE/ INQUIRY	FOR SERVICE, PRESS ON/OFF FOR 2 SECONDS TO:	SELECTION GUIDE/NOTES
13	Lr	Electronic Expansion Valve (EEV) opening	SERVICE AND INQUIRY	Change the maximum operating frequency of T4 Cooling Only intervals. Displays "**Ch**". Press **OK** to return the current operating frequency code of the T4 Cooling Only intervals. Press **UP** or **DOWN** to select the limit value and then press **OK**.	
14	ir	Indoor fan speed	INQUIRY ONLY		Multiple the display number by 8 to calculate the actual RPM
15	HU	Relative Humidity	INQUIRY ONLY		Available in INQUIRY mode for the high tier/new mid tier units that have an RH sensor.
16	TT	Setpoint compensation temperature	INQUIRY ONLY		
17	dT	Dust concentration (not used)	INQUIRY ONLY		
18	WIFI	Wi-Fi signal strength	INQUIRY ONLY		The value is measured in **dBm**. The display values are 0, 1, 2, 3 and 4 (4 is the highest and 0 is the lowest)
19	----	Not available	SERVICE ONLY	Change the cooling frequency upper limit selection in Hz. Displays **"Ch"**. Press **OK** to return the current frequency limit. Press **UP** or **DOWN** to select the preferred frequency upper limit value (in Hz). Press **OK** to confirm.	For example, the unit may be factory set to fluctuate between 40 and 84 Hz. If set to 50, the unit will now be limited to operating between 40 and 50 Hz.
20	oT	Indoor fan target frequency	SERVICE AND INQUIRY	Change the heating frequency upper limit selection in Hz. Displays "**Ch**"; press **OK** to return the current frequency limit. Press **UP** or **DOWN** to select the preferred frequency upper limit value (in Hz). Press **OK** to confirm.	For example, the unit may be factory set to fluctuate between 40 and 84 Hz. If set to 50, the unit is limited to operating between 40 and 50 Hz.
21	----	Cooling Temperature Compensation	SERVICE ONLY	Change the cooling temperature compensation value. Displays "**Ch**". Press **OK** to return the current temperature compensation value code. Press **UP** or **DOWN** to select the cooling temperature difference compensation value. Press **OK** to confirm.	This setting is used to adjust for temperature differences due to the height of the unit install. The offset value can be set at a range of -6° to +6°.
22	----	Heating Temperature Compensation	SERVICE ONLY	Change the heating temperature compensation value. Displays "**Ch**". Press **OK** to return the current temperature compensation value code. Press **UP** or **DOWN** to select the heating temperature difference compensation value. Press **OK** to confirm.	This setting is used to adjust for temperature differences due to the height of unit installation. The offset value can be set at a range of -6° to +6°.
23	----	Maximum Cooling Fan Speed	SERVICE ONLY	Change the maximum cooling fan speed setting as it relates to RPM. Displays "**Ch**". Press **OK** to return the current maximum cooling fan speed setting. Press **UP** or **DOWN** to select the maximum cooling fan speed. Press **OK** to confirm.	For example, the unit may be factory set to fluctuate between 300 and 1000 RPM. If set to 800, the unit is limited to operating between 300 and 800 RPM. (reserved for AHUs and slim ducts)
24	----	Minimum Cooling Fan Speed	SERVICE ONLY	Change the minimum cooling fan speed setting as it relates to RPM. NOTE: Changing this setting is not recommended as it may trigger unit protection protocols. Displays "**Ch**". Press **OK** to return the current minimum cooling fan speed setting. Press **UP** or **DOWN** to select the minimum cooling fan speed. Press **OK** to confirm.	For example, the unit may be factory set to fluctuate between 300 and 1000 RPM. If set to 500, the unit is limited to operating between 500 and 1000 RPM.

CODE	INQUIRY	INQUIRY DESCRIPTION	SERVICE/ INQUIRY	FOR SERVICE, PRESS ON/OFF FOR 2 SECONDS TO:	SELECTION GUIDE/NOTES
25	----	Maximum Heating Fan Speed	SERVICE ONLY	Change the maximum heating fan speed setting as it relates to RPM. Displays "**Ch**". Press **OK** to return the current maximum heating fan speed setting. Press **UP** or **DOWN** to select the maximum heating fan speed. Press **OK** to confirm.	For example, the unit may be factory set to fluctuate between 300 and 1000 RPM. If set to 800, the unit will now be limited to operating between 300 and 800 RPM. (reserved for AHUs and slim ducts)
26	----	Minimum Heating Fan Speed	SERVICE ONLY	Change the minimum heating fan speed setting as it relates to RPM. Note: Changing this setting is not recommended as it may trigger unit protection protocols. Displays "**Ch**". Press **OK** to return the current minimum heating fan speed setting. Press **UP** or **DOWN** to select the minimum heating fan speed. Press **OK** to confirm.	For example, the unit may be factory set to fluctuate between 300 and 1000 RPM. If set to 500, the unit is limited to operating between 500 and 1000 RPM.
27	----	Not available			
28	----	Not available			
29	----	Not available			
30	----	Not available			

To exit the Inquiry Mode:

Press and hold together the On/Off and Fan buttons for 2 seconds.

TROUBLESHOOTING

SAFETY CAUTION

WARNING

Be sure to turn off all power supplies or disconnect all wires to avoid electric shock. While checking indoor/outdoor PCB, equip yourself with anti-static gloves or wrist strap to avoid damage to the board. Follow lockout procedures and all safety measures.

WARNING

Electricity remains in capacitors even when the power supply is off. Ensure the capacitors are fully discharged before troubleshooting.

Inverter Test Tool

NOTE: If using the inverter test tool for troubleshooting, shut off power, remove the electrical panel and locate the cable that is already connected to the test port on the outdoor unit. Connect the test tool to the cable with the connector provided with the test tool. After the maintenance is completed, insert the female end back into the port.

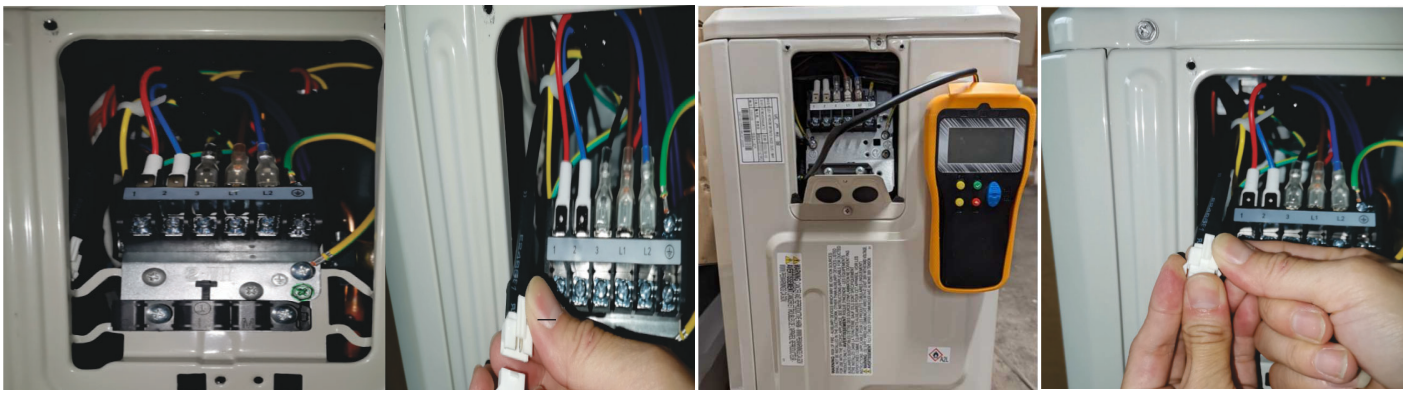

Step 1 Step 2 Step 3 Step 4

Fig. 22 —Inverter Test Tool Maintenance

Connect the Dr. SMART tool to the white terminal as shown in Step 3 above.

Fig. 23 —Dr. SMART Tool

NOTE: These pictures is for reference only. Actual appearance may vary.

GENERAL TROUBLESHOOTING

Error Display (Indoor Unit)

When the indoor unit encounters a recognized error, the operation lamp will flash in a corresponding series, the timer lamp may turn on or begin flashing, and an error code will be displayed. These error codes are described in the Table 2.

Table 2 — Error Codes

DISPLAY	MALFUNCTION AND PROTECTION INDICATION
EC07	ODU fan speed out of control
EC0d	ODU malfunction
EC51	ODU EEPROM parameter error
EC52	ODU coil temp sensor error
EC53	ODU ambient temp sensor error
EC54	COMP. discharge temp sensor error
EC56	IDU coil outlet temp sensor error
EH00	IDU EEPROM malfunction
EH03	IDU fan speed out of control
EH0A	IDU EEPROM parameter error
EH0b	IDU main control and display boards communication error
EH0E	Water-level alarm malfunction
EH3A	External fan DC bus voltage is too low protection
EH3b	External fan DC bus voltage is too high fault
EH60	IDU room temp. sensor (T1) error
EH61	IDU coil temp. sensor (T2) error
EH62/EH66	Evaporator coil inlet temp. sensor (T2B) is in open circuit or short circuit
EH65	Evaporator coil inlet temp. sensor (T2A) is in open circuit or short circuit
EHbA	Communication error between indoor unit and external fan module
EHb3	Communication malfunction between wire and master control
EL01	IDU & ODU communication error
EL0C	System lacks refrigerant
EL16	Communication malfunction between adapter board and outdoor main board
FL09	Mismatch between the new and old platforms
PC00	ODU IPM module protection
PC01	ODU voltage protection
PC02	Compressor top (or IPM) temp. protection
PC03/ PC30/PC31	Pressure protection (low or high pressure. (PC30 = high pressure, PC31 = low pressure)
PC04	Inverter compressor drive error
PC0L	Low ambient temp. protection
NOTE: The digital tube will show DF in defrost mode and FC in forced cooling mode. DF and FC are not error codes.	

Table 3 — Refrigerant Leak Detection Error Codes

EHC1	Refrigerant Sensor detects a leak
EHC2	Working condition of the refrigerant sensor is out of range and a leak is detected

If **you receive one of the codes in Table 3, call a technician as soon as possible. No need to panic, the unit goes into TURBO mode until the error code clears. There is a “beeping” noise coming from the indoor unit, which is normal in this case.**

NOTE: EHC1 and EHC2 do not apply to this unit since it is not equipped with a refrigerant sensor.

QUICK MAINTENANCE BY ERROR CODE

PART REQUIRING REPLACEMENT	ERROR CODE							
	EL 01	EC 51	EC 52	EC 53	EC 54	EC 55	EC 5C	EC 57
Indoor PCB	✓	x	x	x	x	x	x	x
Outdoor PCB	✓	✓	✓	✓	✓	✓	✓	✓
ODU coil temp. sensor	x	x	✓	x	x	x	x	x
ODU ambient temp. sensor	x	x	x	✓	x	x	x	x
COMP. discharge temp. sensor	x	x	x	x	✓	x	x	x
IPM module temperature sensor	x	x	x	x	x	✓	x	x
Pressure sensor	x	x	x	x	x	x	✓	x
Refrigerant pipe temperature sensor	x	x	x	x	x	x	x	✓
Condenser temperature sensor	x	x	x	x	x	x	x	x
Reactor	✓	x	x	x	x	x	x	x
IPM module board	✓	x	x	x	x	x	x	x

PART REQUIRING REPLACEMENT	ERROR CODE								
	EC 07	PC 00	PC 10/PC 11/ PC 12	PC 02	PC 08 / PC 42 / PC 44/ PC 46/ PC 49	PC 0F	PC 41	PH 90	PH 91
Outdoor PCB	✓	✓	✓	✓	✓	✓	✓	x	x
Outdoor fan motor	✓	✓	x	x	✓	x	x	x	x
Reactor or inductance	x	✓	✓	x	✓	✓	x	x	x
Compressor	x	✓	x	x	x	x	x	x	x
IPM module board	x	✓	✓	x	✓	x	x	x	x
Bridge rectifier	x	✓	✓	x	✓	x	x	x	x
Evaporator coil temperature sensor	x	x	x	x	x	x	x	✓	✓
PFC module	x	x	x	x	x	✓	x	x	x
Additional refrigerant	x	x	x	x	x	x	x	x	x
Over load protector	x	x	x	✓	x	x	x	x	x
ODU ambient temp. sensor	x	x	x	x	x	x	x	x	x
Refrigerant pipe temperature sensor	x	x	x	x	x	x	x	x	x
Indoor fan	x	x	x	x	x	x	x	✓	x
Indoor PCB	x	x	x	x	x	x	x	✓	✓

Manufacturer reserves the right to change, at any time, specifications and designs without notice and without obligations.

QUICK MAINTENANCE BY ERROR CODE (continued)

Part requiring replacement	Error Code							
	PC 40	PC 43	PC 45	PC 06	PC 0a	PC 30	PC 31	EL 16
Outdoor PCB	√	√	x	√	√	√	√	√
Outdoor fan motor	x	x	x	x	√	√	√	x
ODU coil temp. sensor	x	x	x	x	√	x	x	x
COMP. discharge temp. sensor	x	x	x	√	x	x	x	x
Compressor	x	√	x	x	x	x	x	x
IPM module board	x	x	√	x	x	x	x	x
Additional refrigerant	x	x	x	√	√	x	√	x
Electric control box	√	x	x	x	x	x	x	x
High pressure switch	x	x	x	x	x	√	x	x
Low pressure switch	x	x	x	x	x	x	√	x
Adapter board	x	x	x	x	x	x	x	√

TROUBLESHOOTING BY ERROR CODE

EH 00/ EH 0A / EC 51 (EEPROM Malfunction Error Diagnosis and Solution)

Description: Indoor or outdoor PCB main chip does not receive feedback from EEPROM chip.

Recommended parts to prepare: Indoor PCB, Outdoor PCB

Troubleshooting and repair:

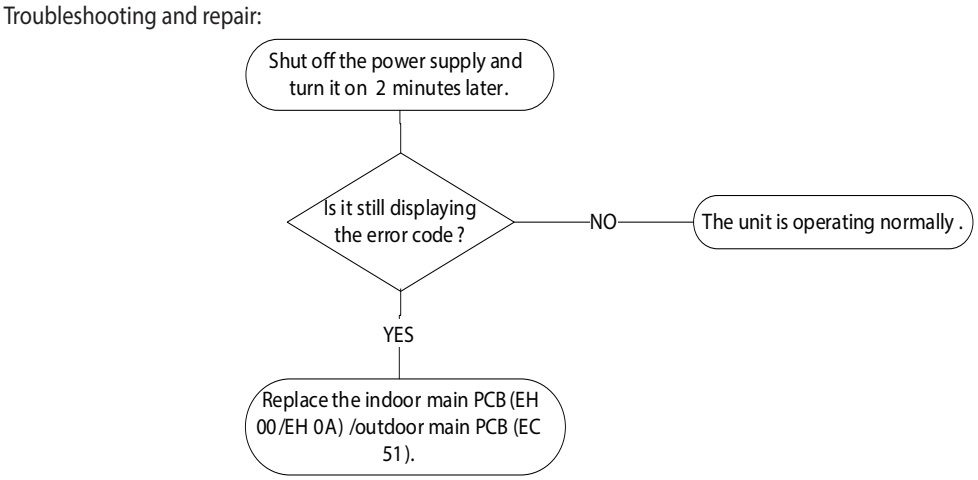

Fig. 24 —EC 51

Remarks:

EEPROM: A read-only memory whose contents can be erased and reprogrammed using a pulsed voltage.

The location of the EEPROM chip on the outdoor PCB is shown in the following image:

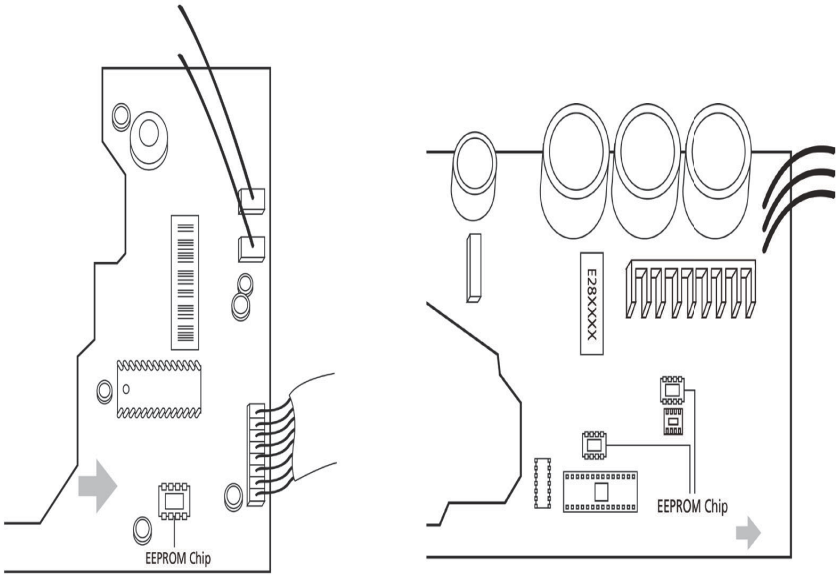

Fig. 25 —Location of EPROM Chip

NOTE: This picture is only for reference, actual appearance may vary.

IMPORTANT: Troubleshooting and repair of compressor driven chip EEPROM parameter error sand communication errors between outdoor main chip and compressor driven chip are same as EC 51.

EL 01 (Indoor and Outdoor Unit Communication Error Diagnosis and Solution)

Description: Indoor unit can not communicate with outdoor unit

Recommended parts to prepare: Signal Wires, Magnetic Ring, Indoor PCB, Outdoor PCB

Troubleshooting and repair: RS 485 Communication

:

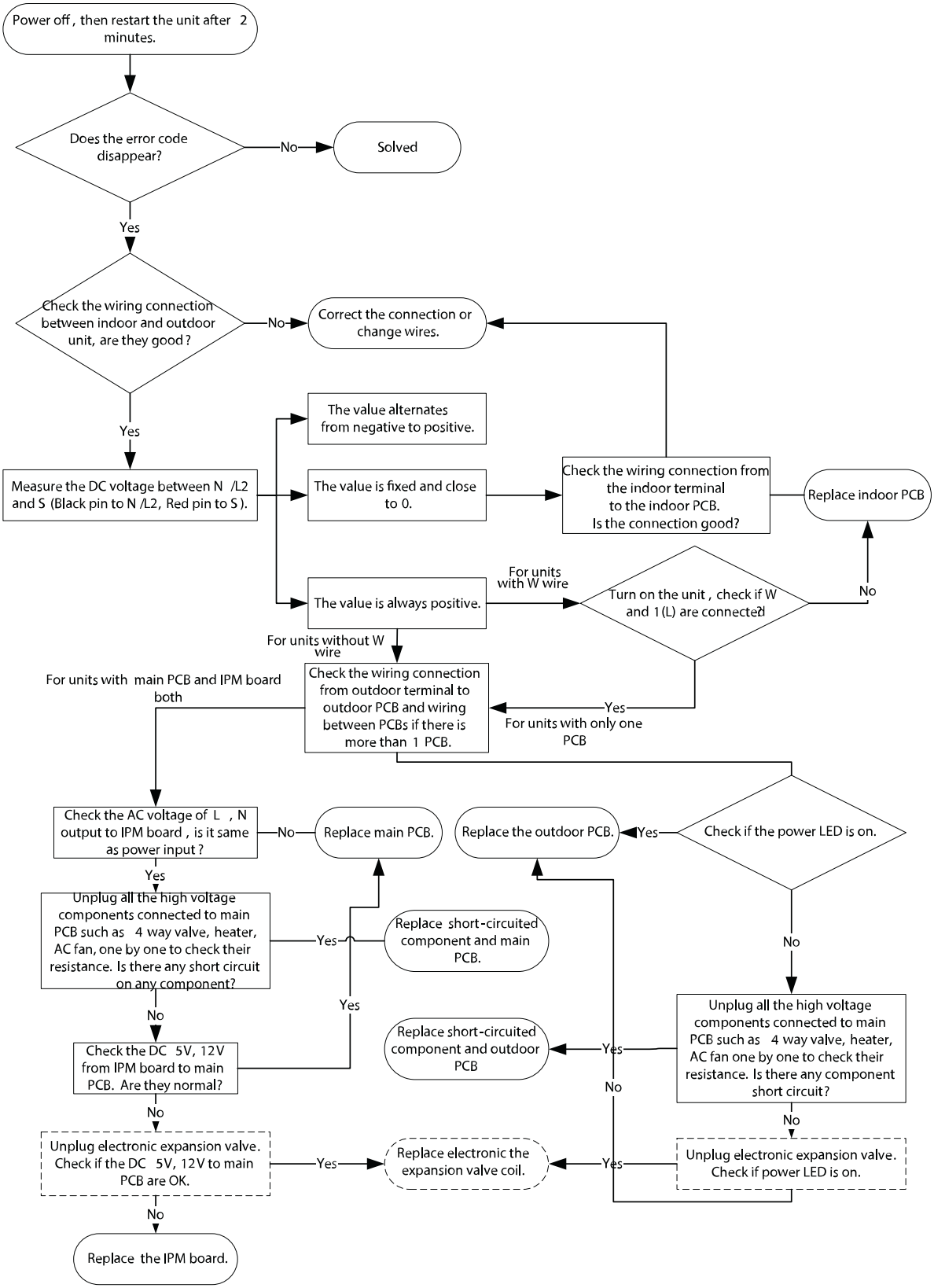

NOTE: For certain models, the outdoor PCB cannot be removed separately. In this case, the outdoor electric control box should be replaced as a whole.

EH03 / EC 07 (Fan Speed Is Operating Outside of Normal Range Diagnosis and Solution)

Description: When indoor / outdoor fan speed keeps too low or too high for a certain time, the LED displays the failure code and the AC turns off.

Recommended parts to prepare: Connection wires, Fan assembly, Fan motor, PCB

Troubleshooting and repair:

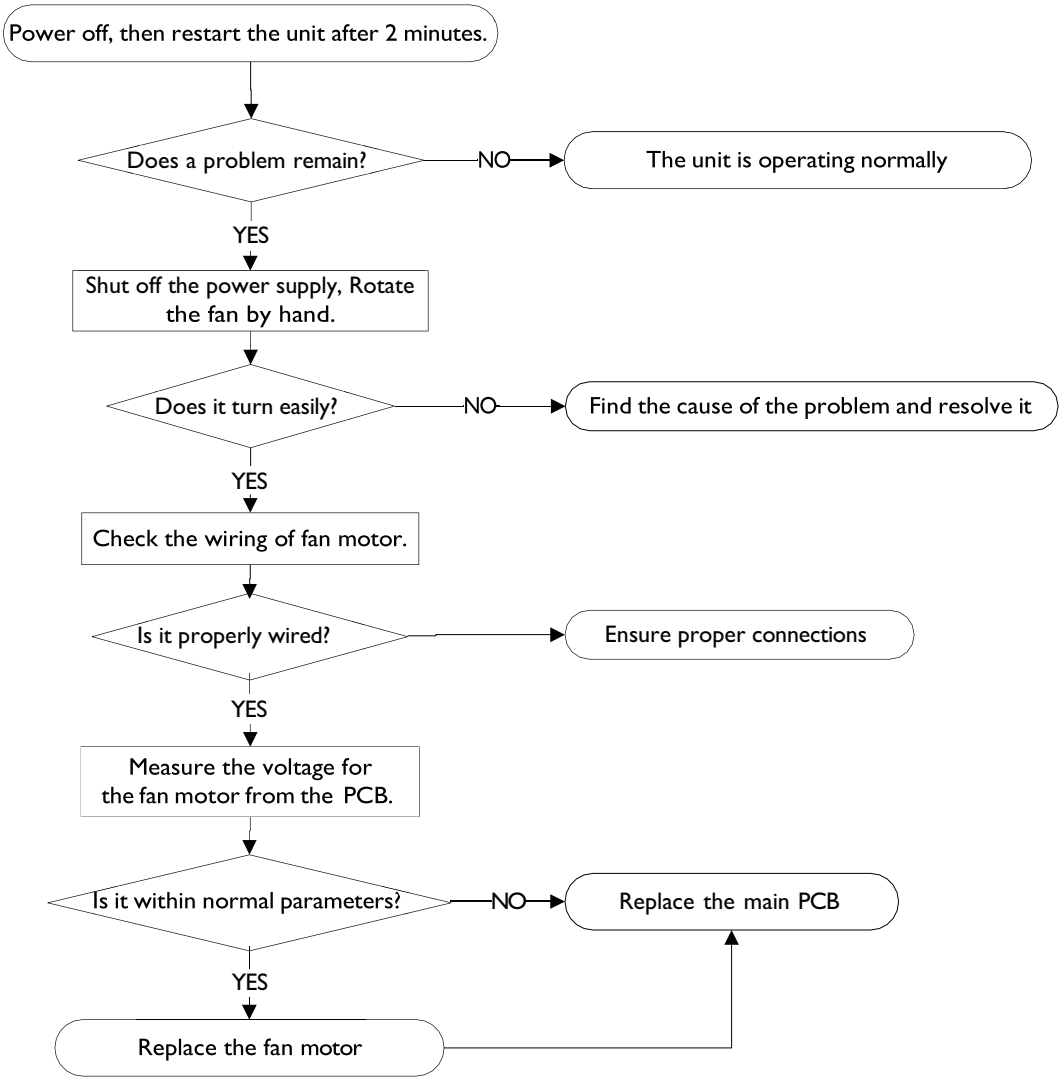

Index

1. Indoor or Outdoor DC Fan Motor (control chip is in fan motor)
   With the power on and when the unit is in standby, measure the voltage of pin1- pin3, pin4- pin3 in the fan motor connector. If the value of the voltage is not in the range shown in below table, the PCB needs to be replaced.

No.	Color	Signal	Voltage
1	Red	Vs/Vm	192V~380V
2	—	—	—
3	Black	GND	0V
4	White	Vcc	13.5-16.5V
5	Yellow	Vsp	0~6.5V
6	Blue	FG	13.5-16.5V

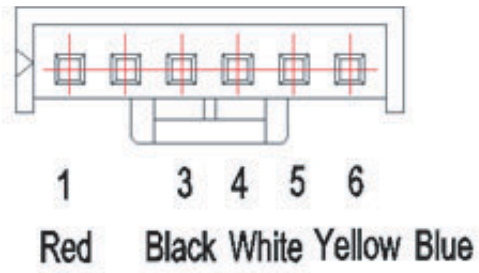

Fig. 26 —Fan Motor Connector, Pin Location

2. Outdoor DC Fan Motor (control chip is in outdoor PCB)
   Release the UVW connector. Measure the resistance of U-V, U-W, V-W. If the resistances are not equal to each other, the fan motor needs to be replaced. Otherwise, the PCB needs to be replaced.

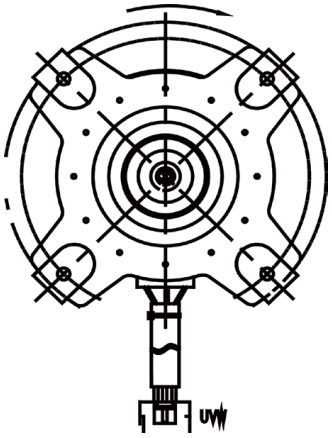

Fig. 27 —UVW Connector

EH 60/EH 61/EH 62/EH 66/EH 65/EC 53/EC 52/EC 54/EC 56 (Open Circuit or Short Circuit of Temperature Sensor Diagnosis and Solution)

Description: If the sampling voltage is lower than 0.06V or higher than 4.94V, the LED displays the failure.

Recommended parts to prepare: Connection wires, Sensors, PCB

Troubleshooting and repair:

Refer to Appendix, page 74.

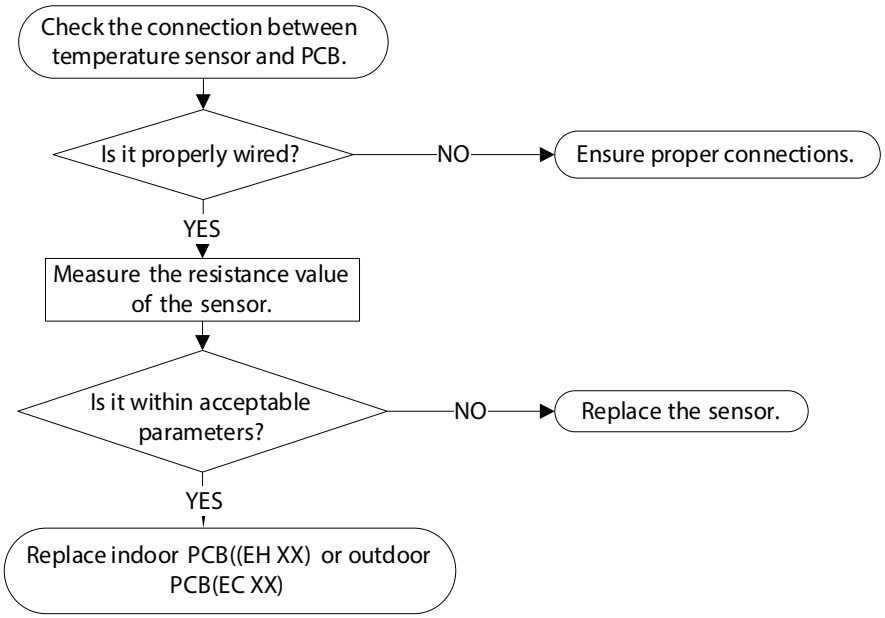

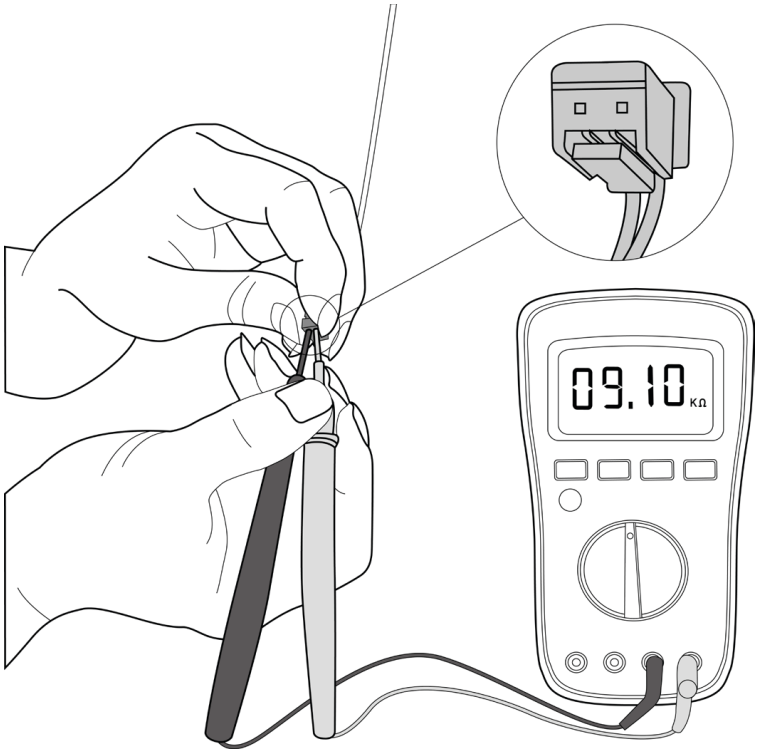

NOTE: This picture and the value are only for reference, actual appearance and value may vary.

EL 0C (System Lacks Refrigerant Diagnosis and Solution)

Description: Judging the abnormality of the refrigeration system according to the number of compressor stops and the changes in operating parameters caused by excessive exhaust temperature.

Recommended parts to prepare: Indoor PCB, Additional refrigerant

Troubleshooting and repair:

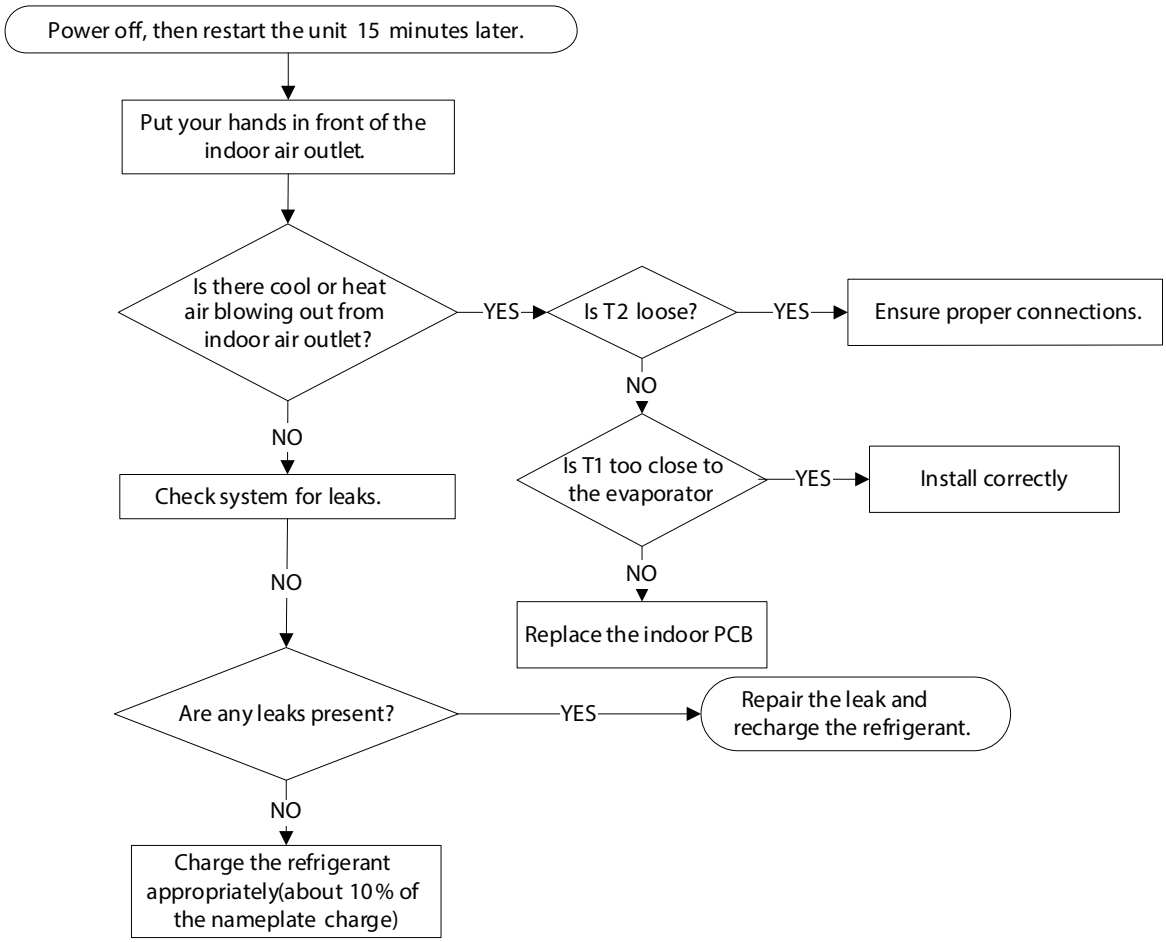

6.6 EH 0E (Water-Level Alarm Malfunction Diagnosis and Solution)

Description: If the sampling voltage is not 5V, the LED displays the failure code.

Recommended parts to prepare: Connection wires, Water-level switch, Water pump, Indoor PCB

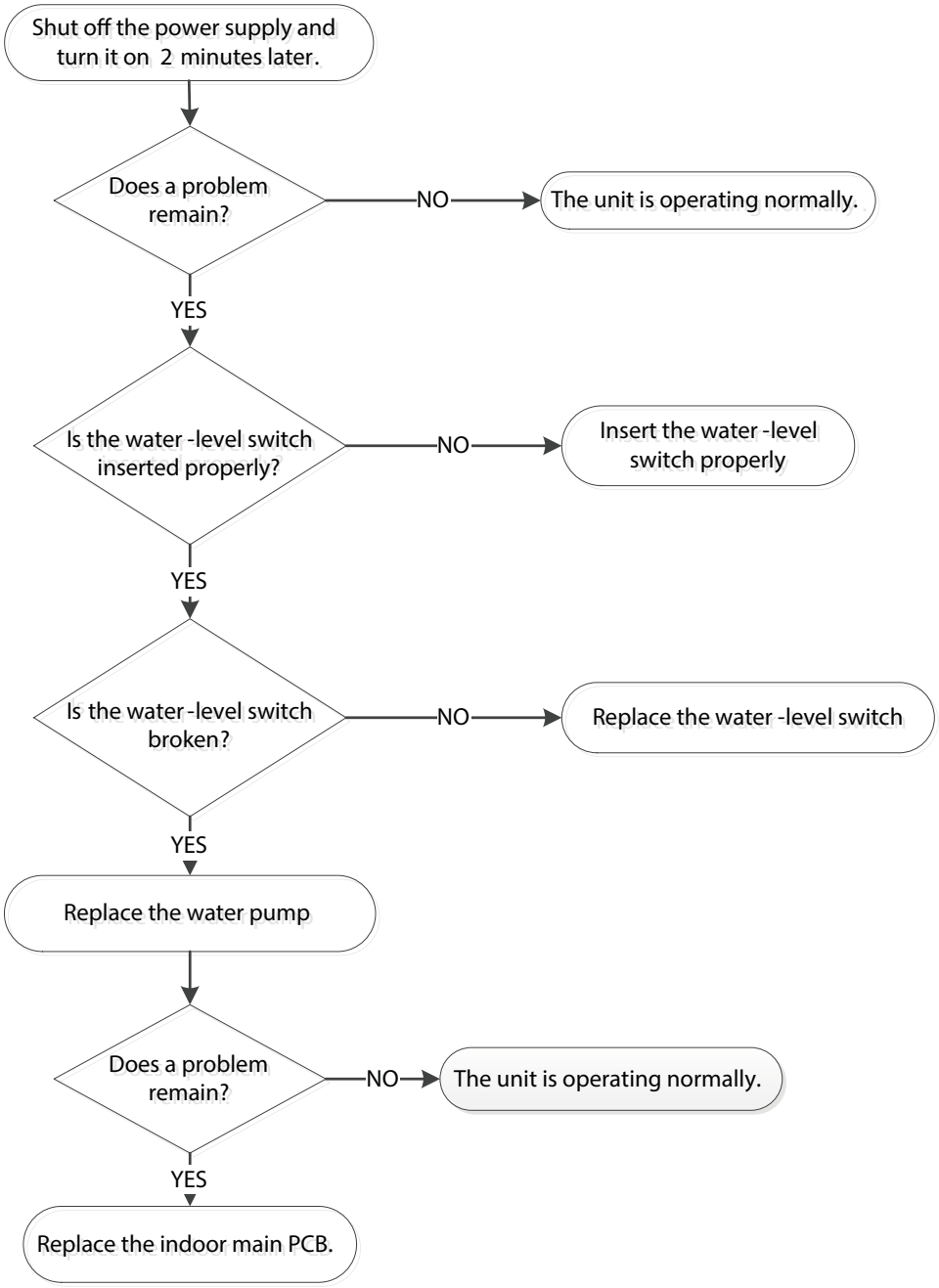

PC 00 (ODU IPM Module Protection Diagnosis and Solution)

Description: When the voltage signal the IPM sends to the compressor drive chip is abnormal, the display LED shows "PC 00" and the AC turn off.

Recommended parts to prepare: Connection wires, IPM module board, Outdoor fan assembly, Compressor, Outdoor PCB

Troubleshooting and repair:

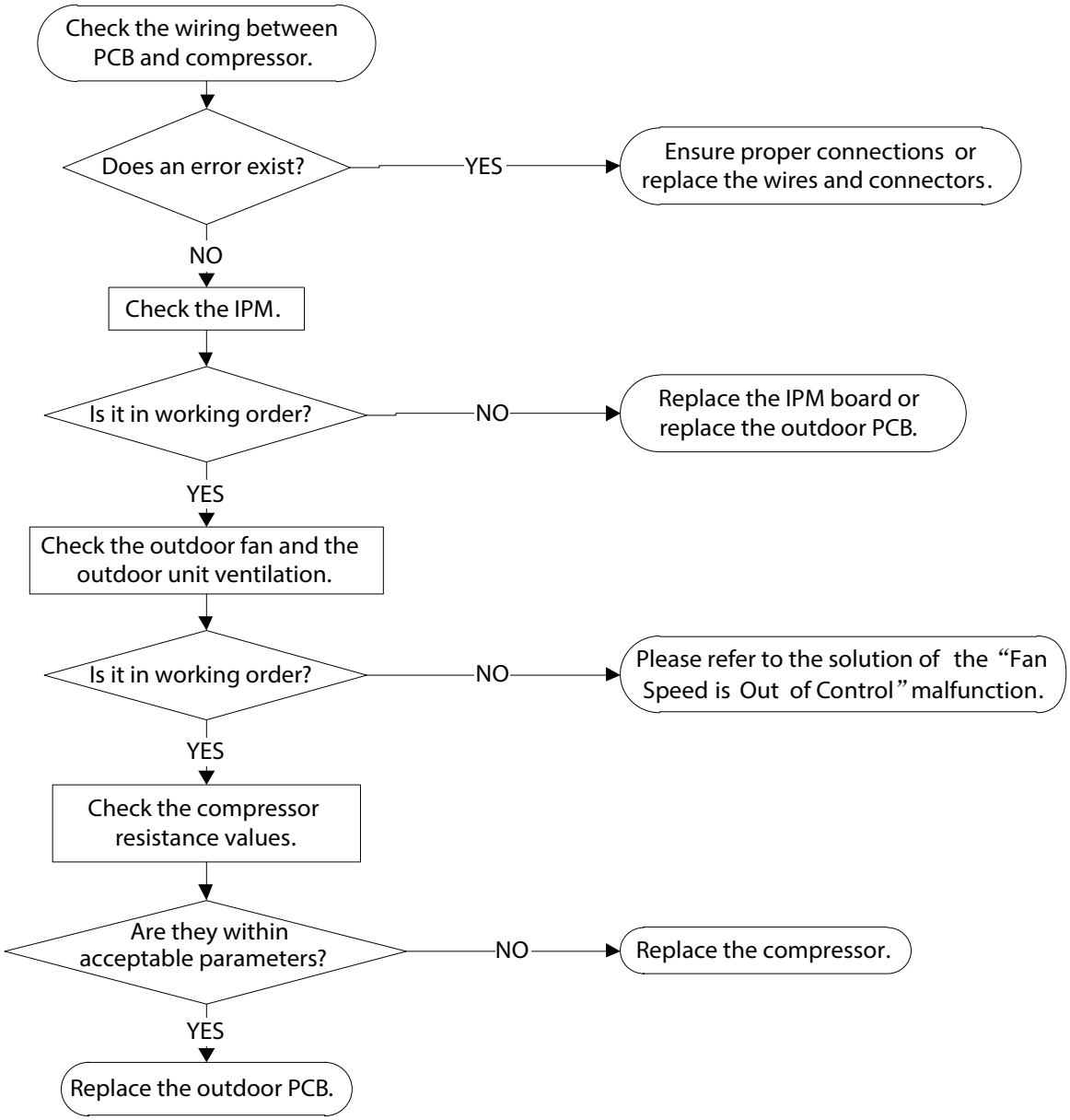

PC 01 (ODU Voltage Protection Diagnosis and Solution)

Description: Abnormal increases or decreases in voltage are detected by checking the specified voltage detection circuit.

Recommended parts to prepare: Power supply wires, IPM module board, PCB, Reactor

Troubleshooting and repair:

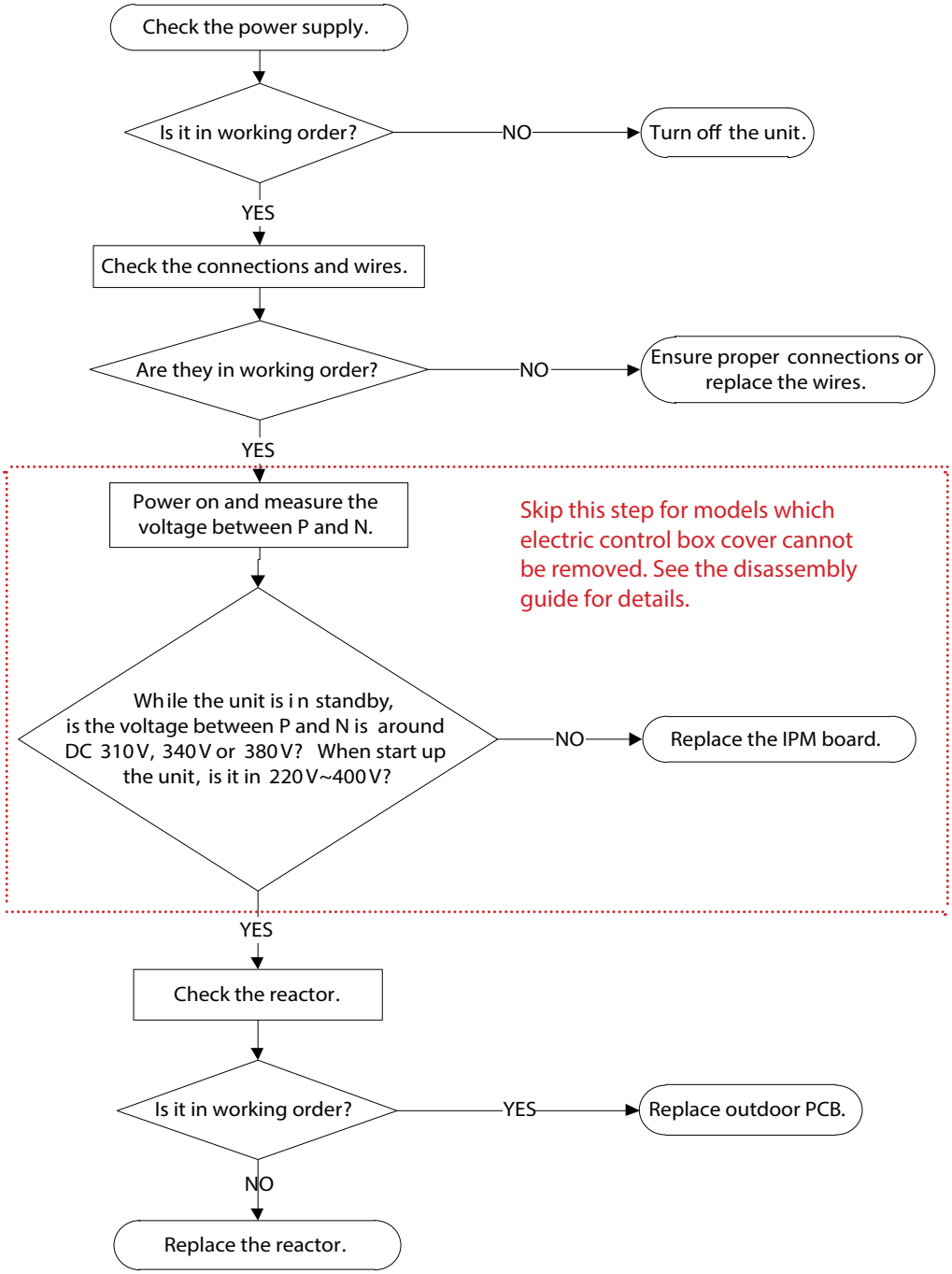

PC 04 (Inverter Compressor Drive Error Diagnosis and Solution)

Description: An abnormal inverter compressor drive is detected by a special detection circuit, including communication signal detection, voltage detection, compressor rotation speed signal detection and so on.

Recommended parts to prepare: Connection wires, IPM module board, Outdoor fan assembly, Compressor, Outdoor PCB

Troubleshooting and repair:

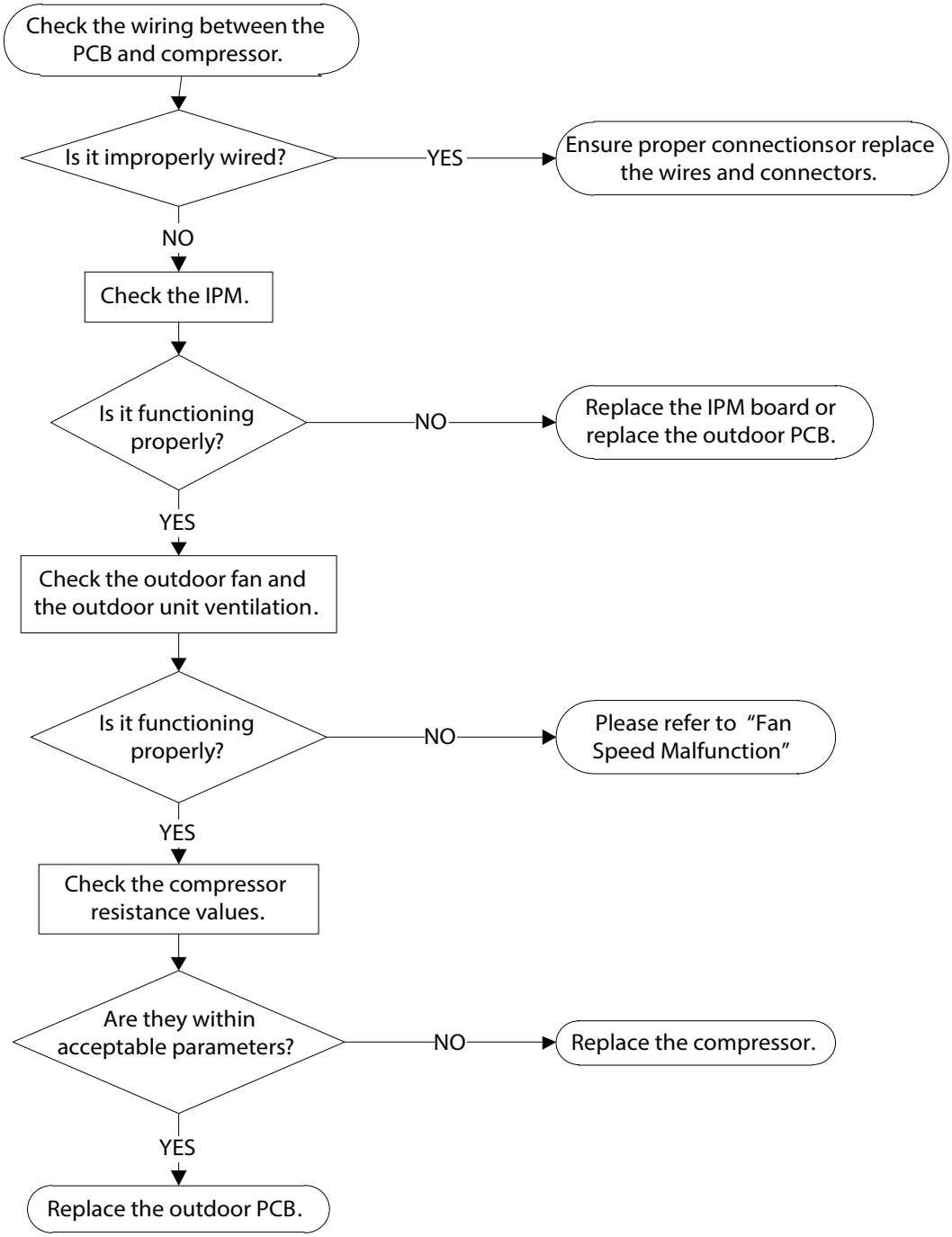

PC 03 Pressure Protection, PC30 High Pressure Protection, and PC31 Low Pressure Protection, Diagnosis and Solution

Description: Outdoor pressure switch cut off the system because high pressure is higher than 4.4 MPa or outdoor pressure switch cut off the system because low pressure is lower than 0.13 MPa, the LED displays the failure code.

Recommended parts to prepare: Connection wires, Pressure switch, Outdoor fan, Outdoor main PCB, Refrigerant

Troubleshooting and repair:

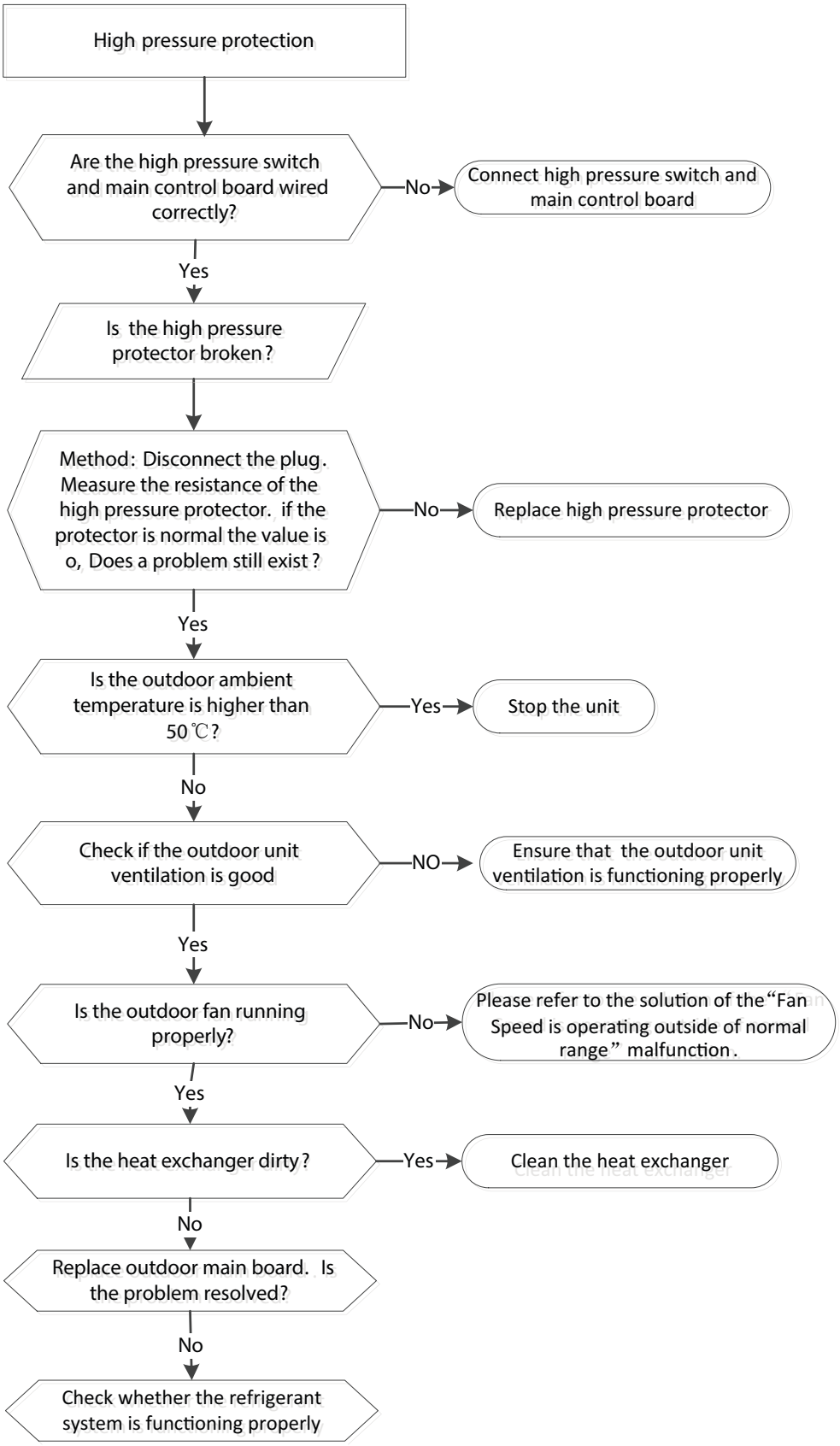

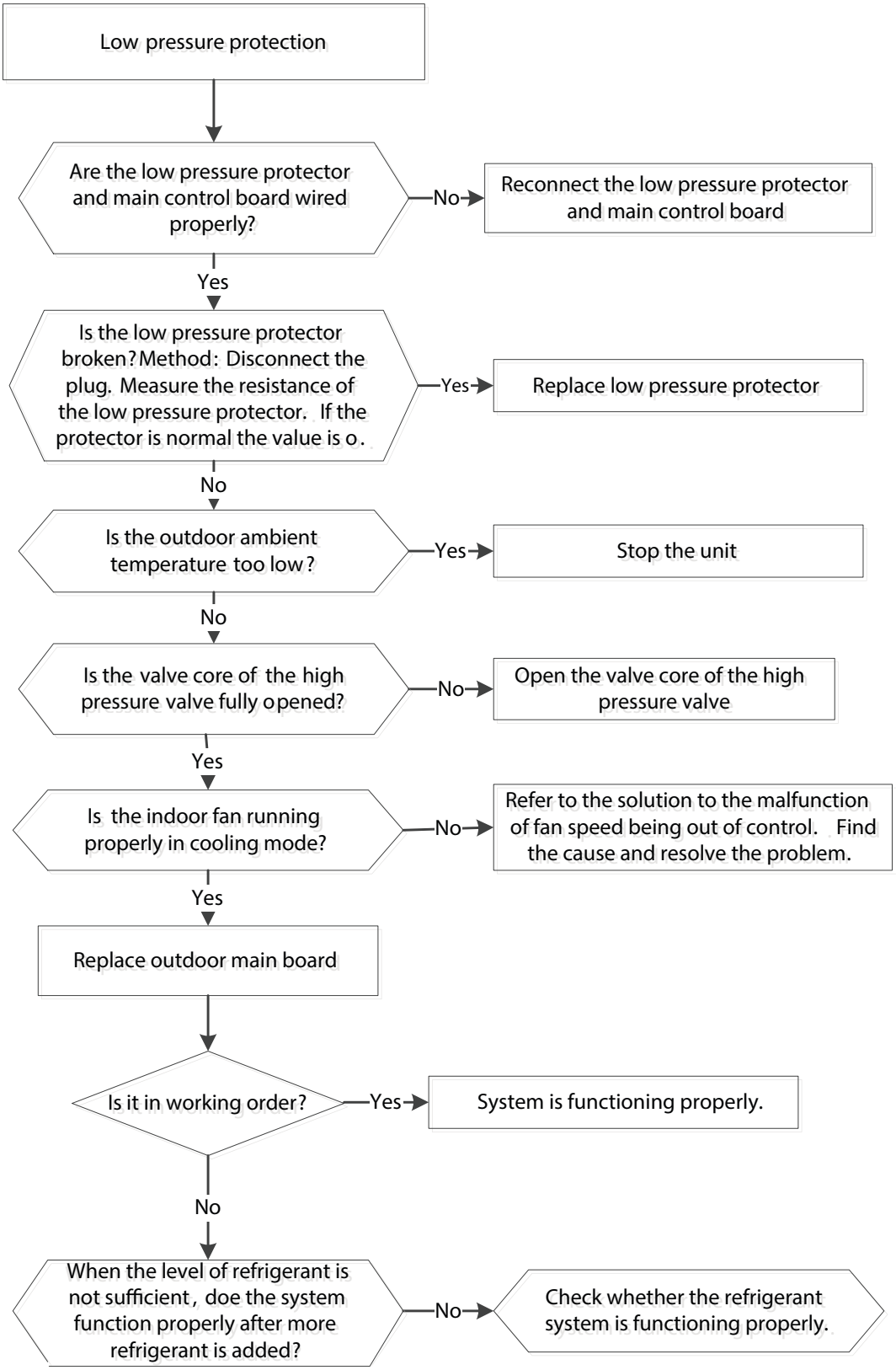
Low pressure protection
Are the low pressure protector and main control board wired properly?
No
Reconnect the low pressure protector and main control board
Yes
Is the low pressure protector broken? Method: Disconnect the plug. Measure the resistance of the low pressure protector. If the protector is normal the value is o.
Yes
Replace low pressure protector
No
Is the outdoor ambient temperature too low?
Yes
Stop the unit
No
Is the valve core of the high pressure valve fully opened?
No
Open the valve core of the high pressure valve
Yes
Is the indoor fan running properly in cooling mode?
No
Refer to the solution to the malfunction of fan speed being out of control. Find the cause and resolve the problem.
Yes
Replace outdoor main board
Is it in working order?
Yes
System is functioning properly.
No
When the level of refrigerant is not sufficient, doe the system function properly after more refrigerant is added?
No
Check whether the refrigerant system is functioning properly.

PC 02 (Compressor Top (or IPM) Temp. Protection Diagnosis and Solution)

Description: **For some models with overload protection, If the sampling voltage is not 5V, the LED will display the failure. If the temperature of IPM module is higher than a certain value, the LED displays the failure code.**

Recommended parts to prepare: Connection wires, Outdoor PCB, IPM module board, High pressure protector, System blockages

Troubleshooting and repair:

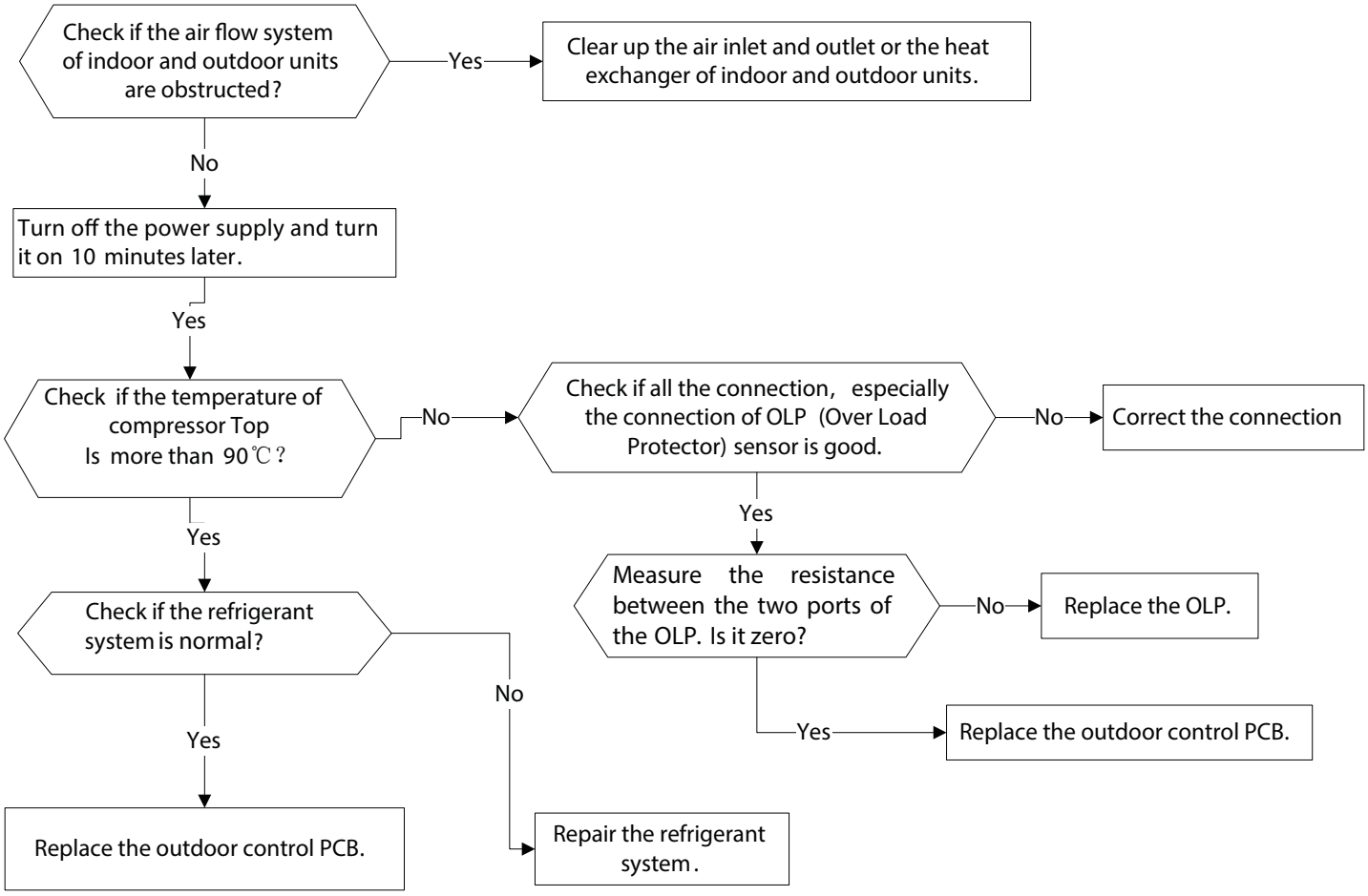

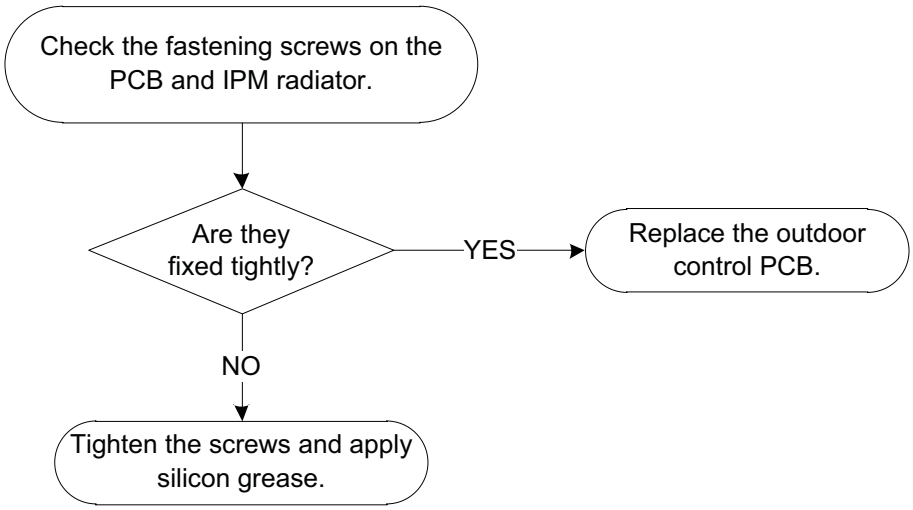

PC 0L (Low Ambient Temperature Protection)

Description: It is a protection function. When compressor is off, outdoor ambient temperature(T4) is lower than -35oC. for 10s, the AC will stop and display the failure code.

When compressor is on, outdoor ambient temperature(T4) is lower than -40oC.for 10s, the AC will stop and display the failure code.

When outdoor ambient temperature(T4) is no lower than -32oC.for 10s, the unit will exit protection

EH b3 (Communication Malfunction Between Wire and Master Control) Diagnosis and Solution

Description: If Indoor PCB does not receive feedback from wired controller, the error displays on the wired controller

Recommended parts to prepare: Connection wires, Indoor PCB, Wired controller

Troubleshooting and repair:

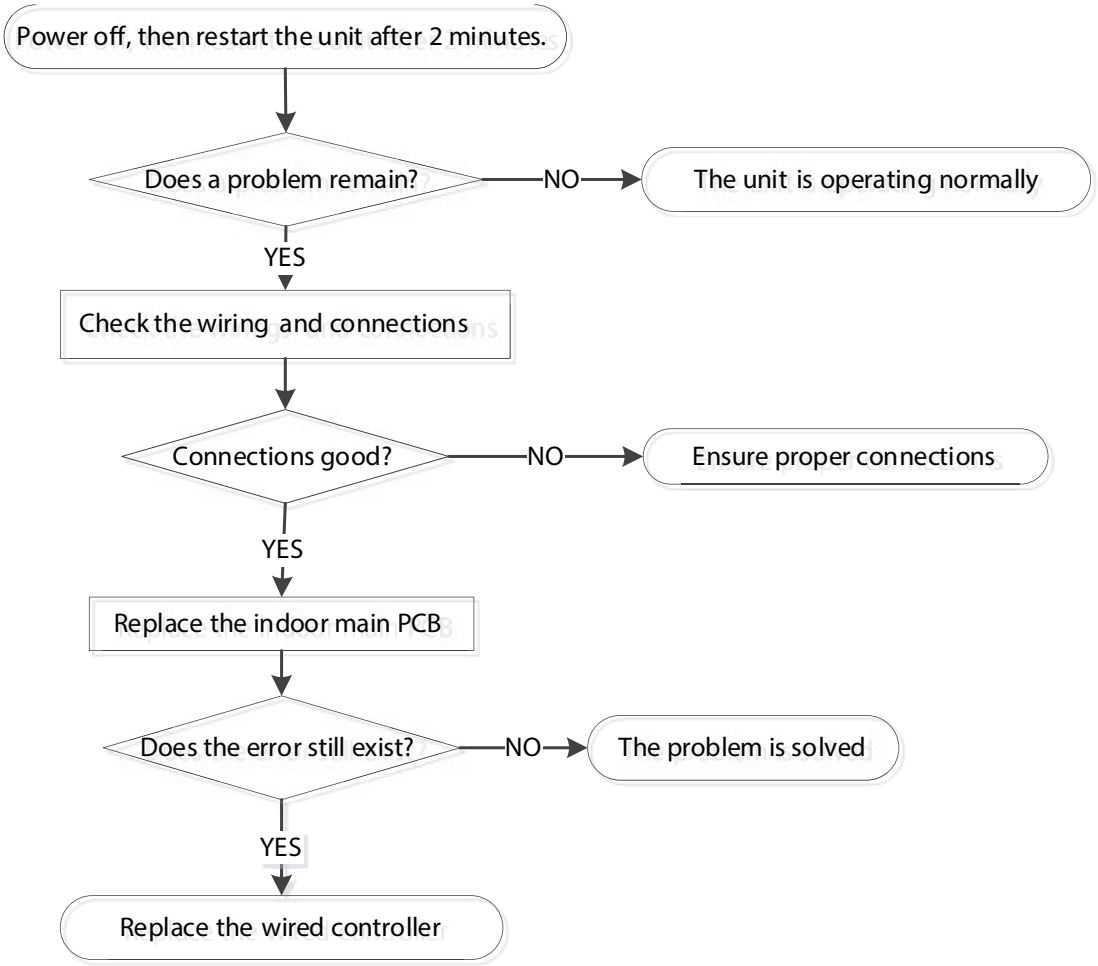

EH bA (Communication Malfunction Between Indoor Unit and External Fan Module)/ EH 3A(External Fan DC Bus Voltage Is Too Low Protection)/ EH 3b (External Fan DC Bus Voltage is Too High) Fault) Diagnosis and Solution

Description: Indoor unit does not receive the feedback from external fan module during 150 seconds. or Indoor unit receives abnormal increases or decreases in voltage from external fan module.

Recommended parts to prepare: Indoor main PCB

Troubleshooting and repair:

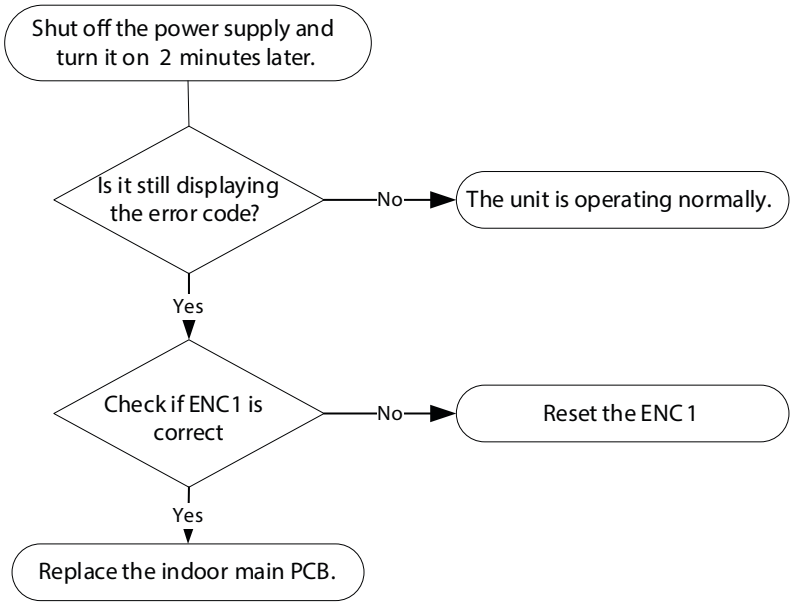

EC 0d (ODU Malfunction Diagnosis and Solution)

Description: The indoor unit detects the outdoor unit in error.

Recommended parts to prepare: Outdoor unit

Troubleshooting and repair:

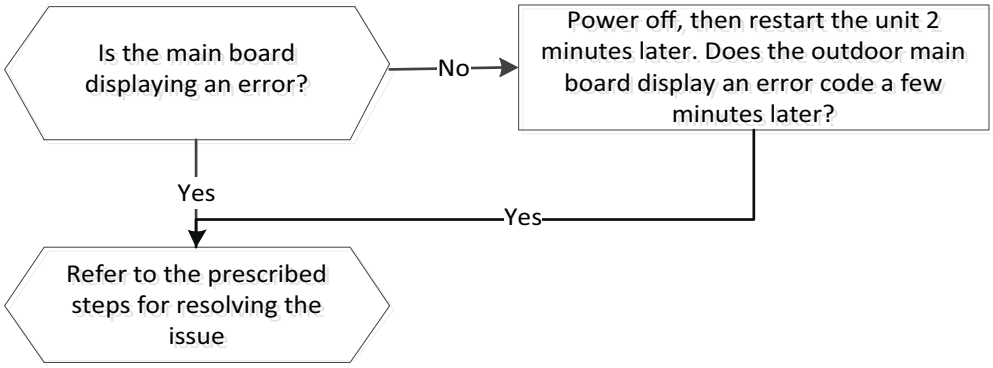

EH 0b(IDU Main Control Board and Display Board Communication Error Diagnosis and Solution)

Description: Indoor PCB does not receive feedback from the display board.

Recommended parts to prepare: Communication wire, Indoor PCB, Display board

Troubleshooting and repair:

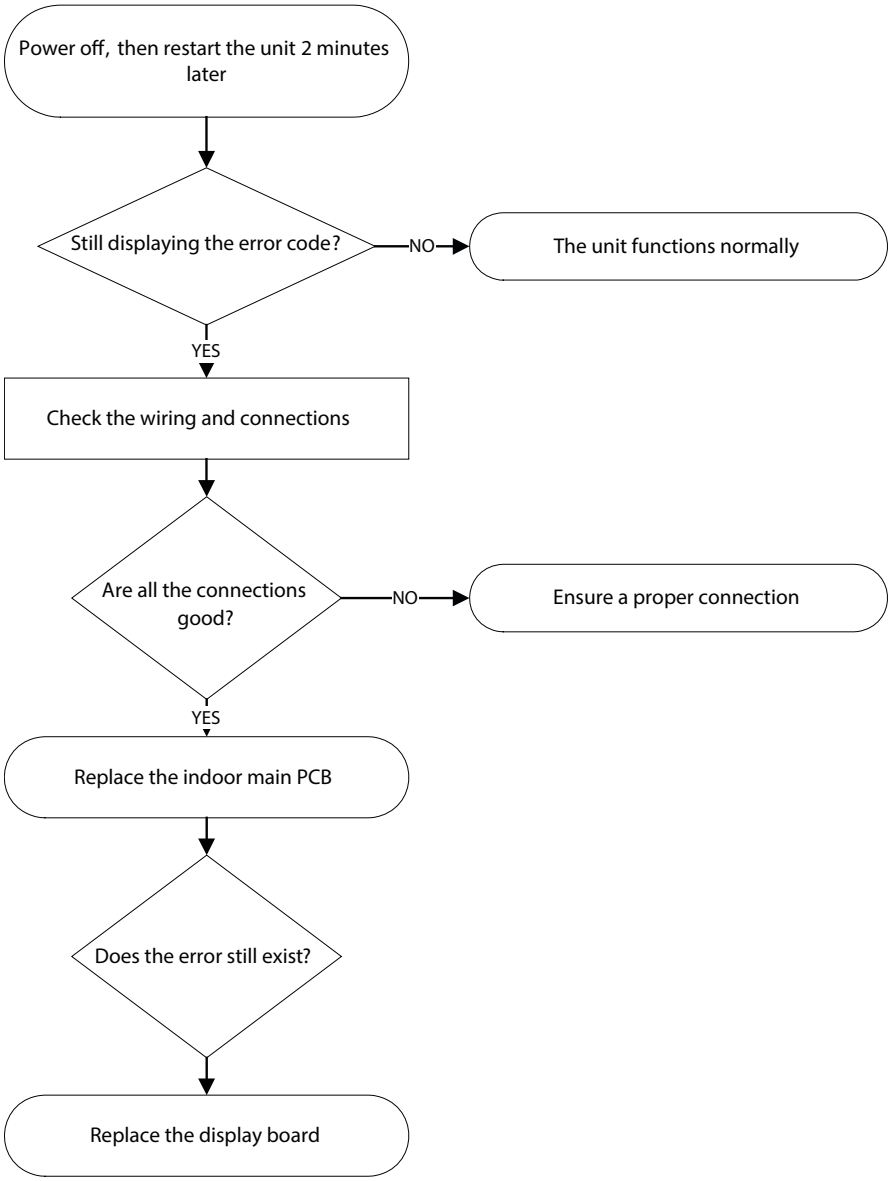

EL 16(Communication Malfunction Between Adapter Board and Outdoor Main Board Diagnosis and Solution)

Description: The adapter PCB cannot detect the main control board.

Recommended parts to prepare: Connection wires, Adapter board, Outdoor main PCB

Troubleshooting and repair:

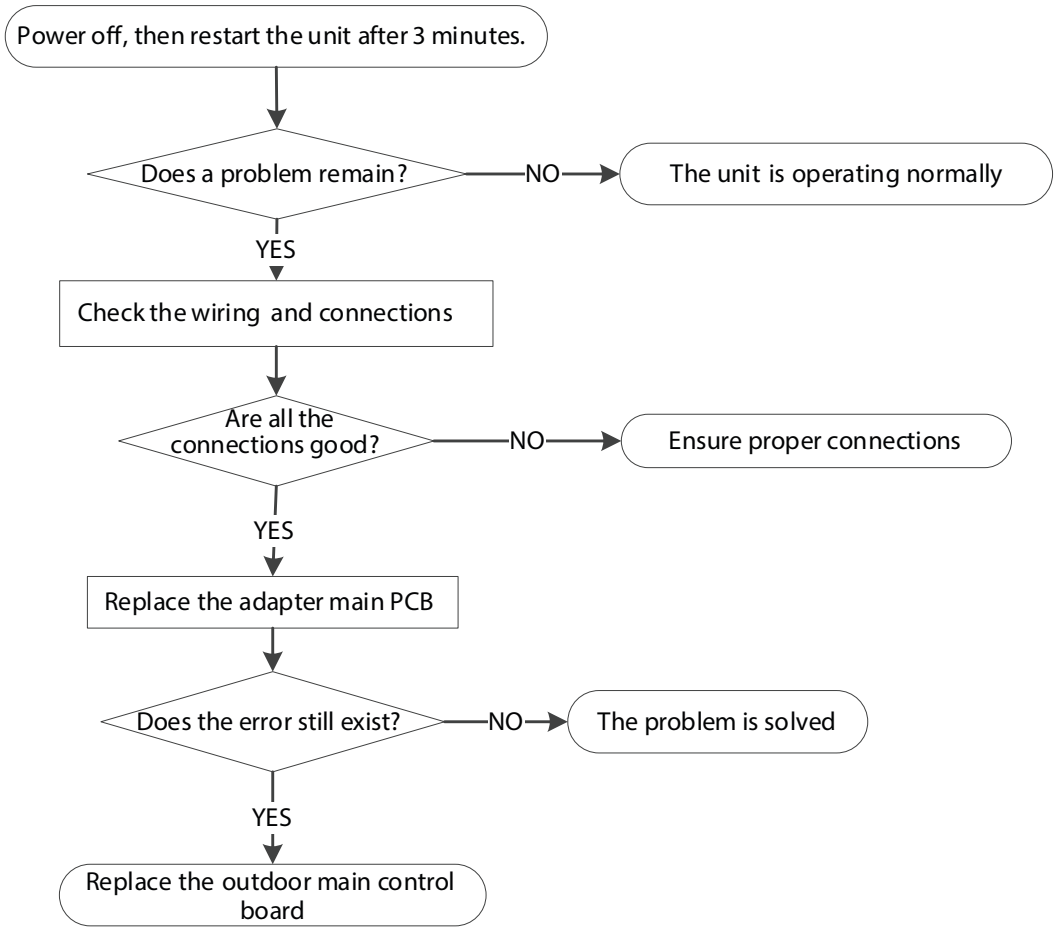

FL 09(Mismatch between the new and old platforms diagnosis and solution)

Description: Indoor and outdoor units are mismatched, the LED displays this code. Please replace the matching indoor or outdoor unit.

DISASSEMBLY INSTRUCTIONS - 9K - 24K Units

9K - 24K Front Panel

PROCEDURES	ILLUSTRATION
1. Hold the front panel by the tabs on the both sides and lift it. (see illustration)	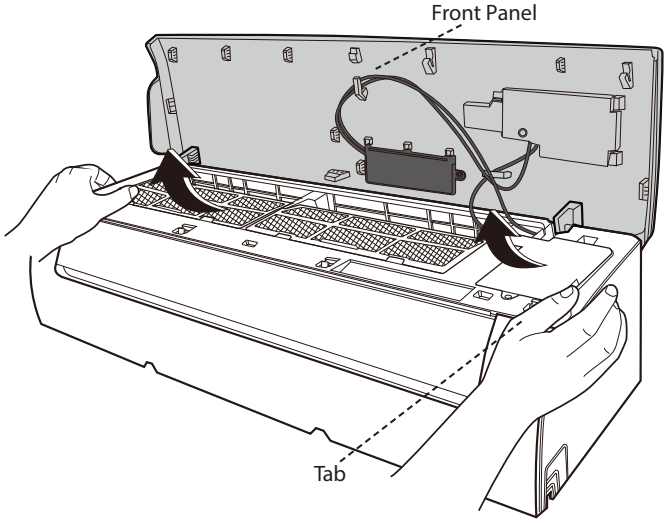
2. Push up the bottom of an air filter (step 1), and then pull it out downwards (step 2).(see illustration)	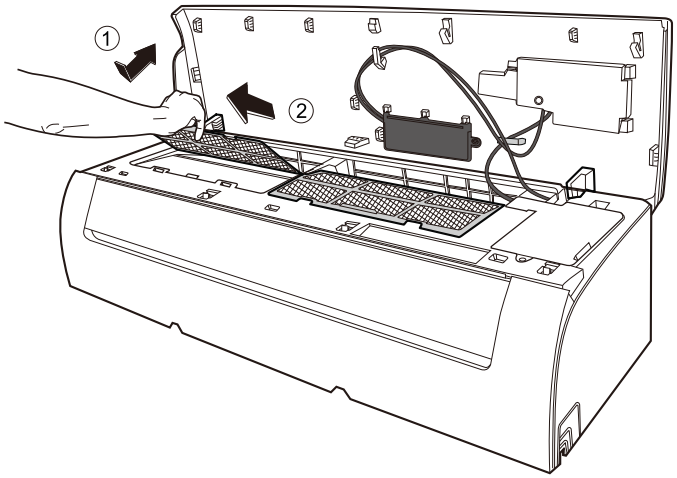

PROCEDURES	ILLUSTRATION
3. Open the horizontal louver and push the hook towards left to open it.(see illustration) 4. Bend the horizontal louver lightly by both hands to loosen the hooks, then remove the horizontal louver (see illustration)	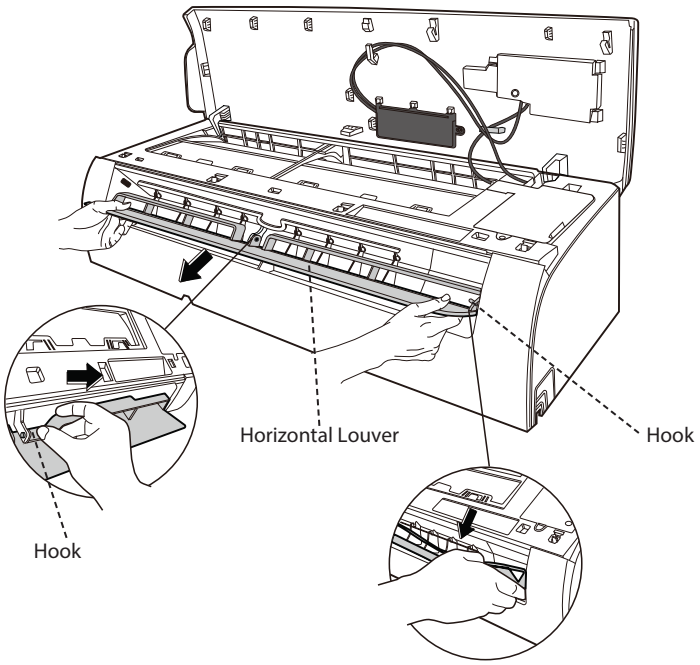
5. Pry the electrical cover by a screw driver, and rotate it towards left, then remove it. (see illustration)	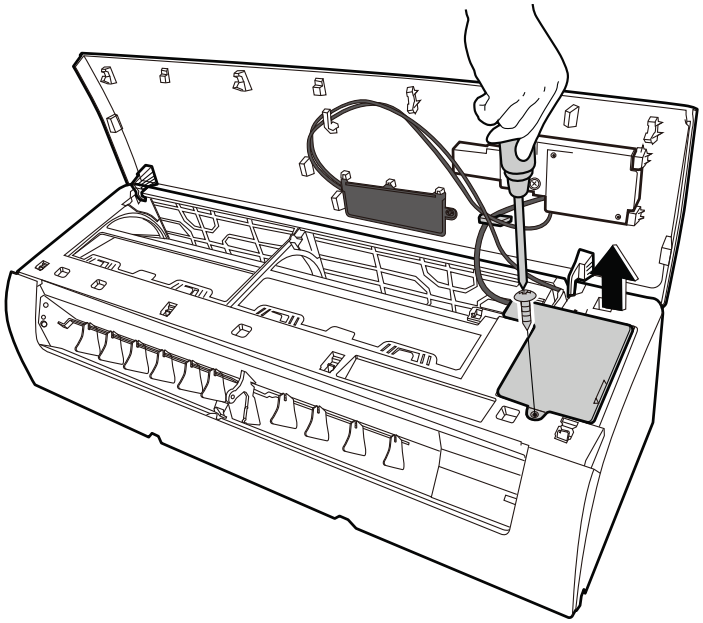

PROCEDURES	ILLUSTRATION
6. Disconnect the connector for display board. (see illustration) 7. Slid the front panel side to side to release each axis	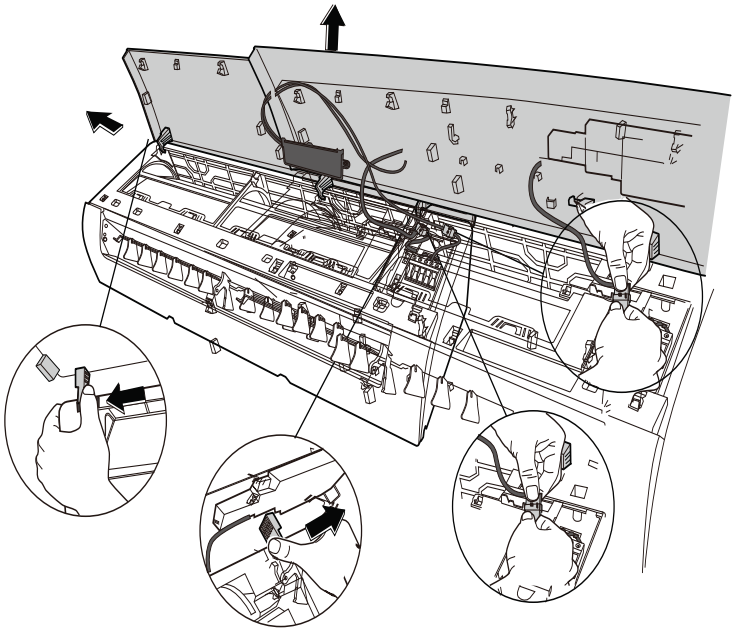
8. Open the screw cap and then remove the 3 screws	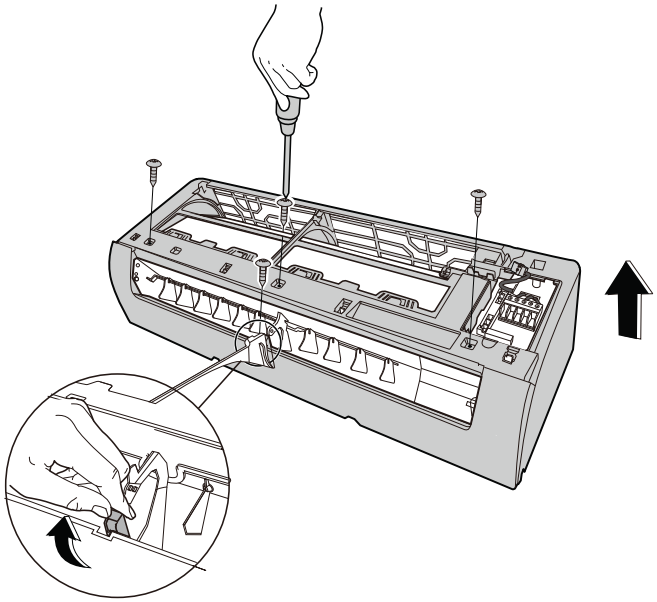

PROCEDURES	ILLUSTRATION
9. Release the hooks with hands.	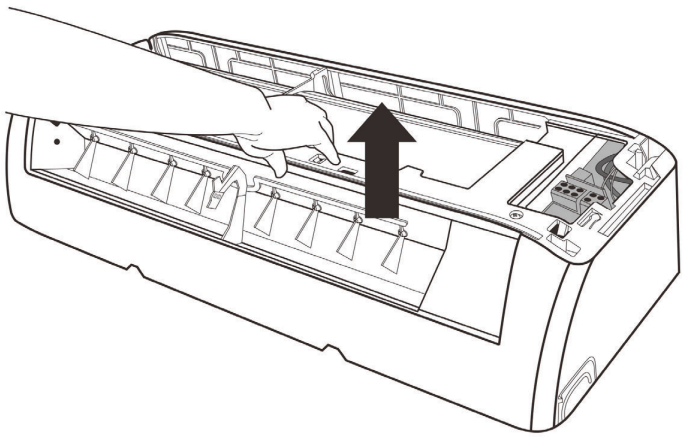
10. Release the 5 hooks in the back	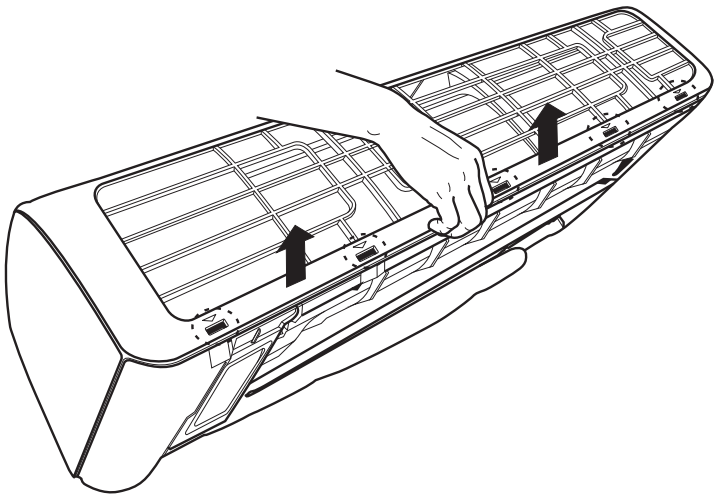
11. Pull out the panel frame while pushing the hook through a clearance between the panel frame and the heat exchanger.	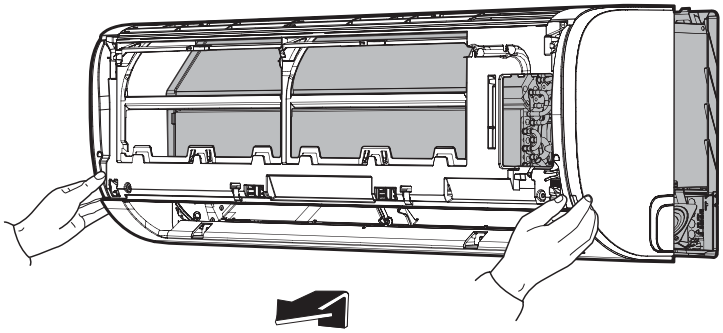

PROCEDURES	ILLUSTRATION
12. Release the 5 hooks of the vertical blades, then pull the vertical blades rightward and remove it.	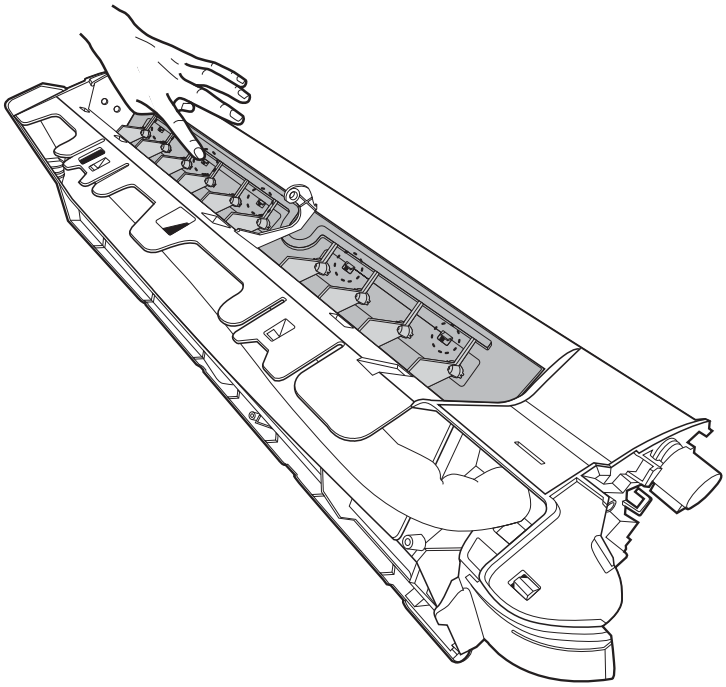
13. Remove 1 screw of the display board. 14. Rotate the display board in the direction shown. (see illustration) 15. Remove the transfer box in the direction of the arrow.	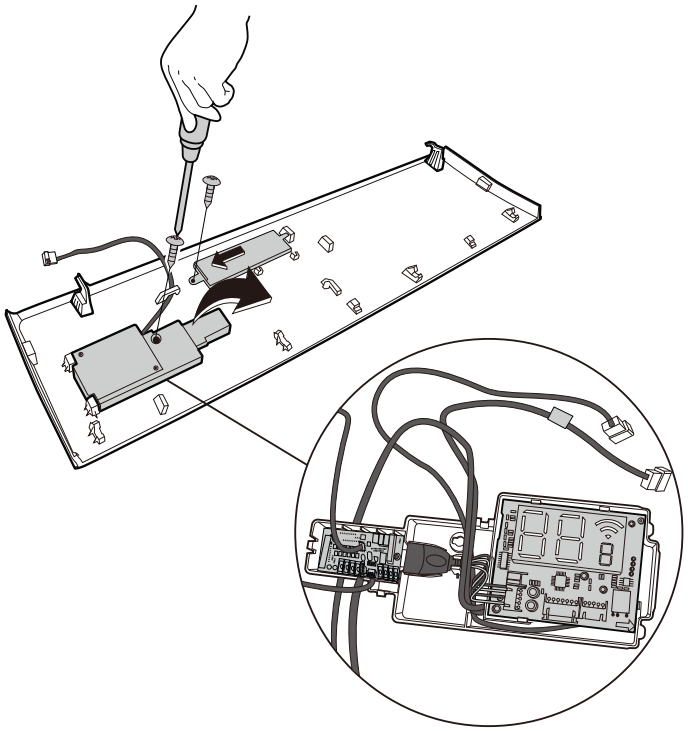

PROCEDURES	ILLUSTRATION
16. Open the transfer box, and then remove the transfer board.	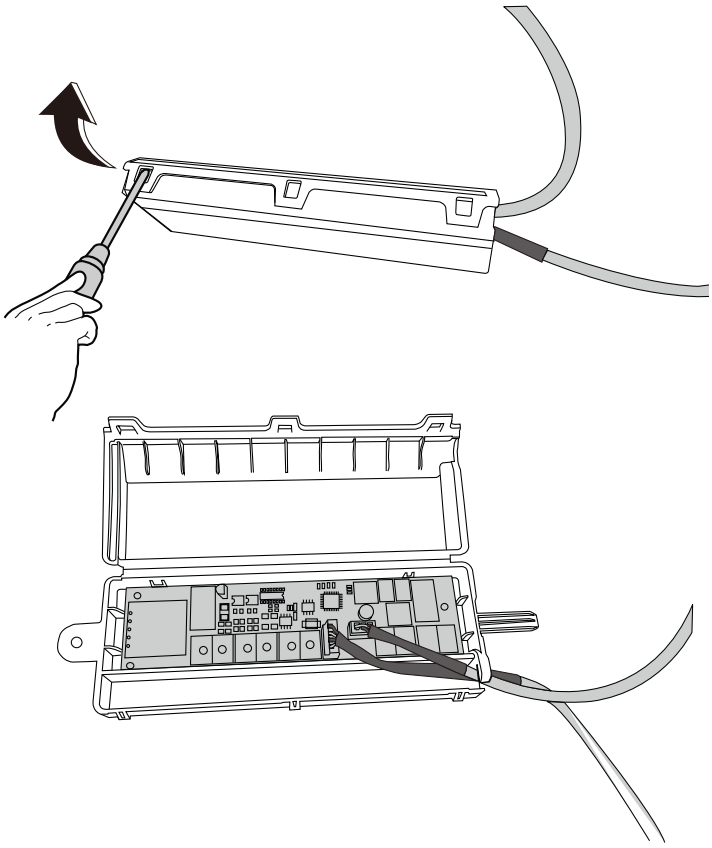

9K - 24K Electrical Parts

PROCEDURES	ILLUSTRATION
1. Remove one fixing screw of electrical control box subassembly. (see illustration) **NOTE:** To repair the electrical control box components, perform the first step. To repair the main control board assembly, perform steps 2 through 5.	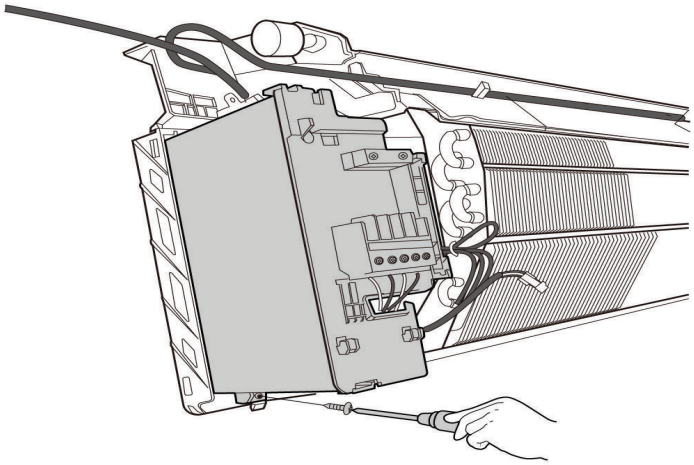
2. Use a shear to cut the ribbon, then pull out the coil temperature sensor (T2). (see illustration) 3. Remove one screw from the electronic control box and the two screws used for the ground connection.	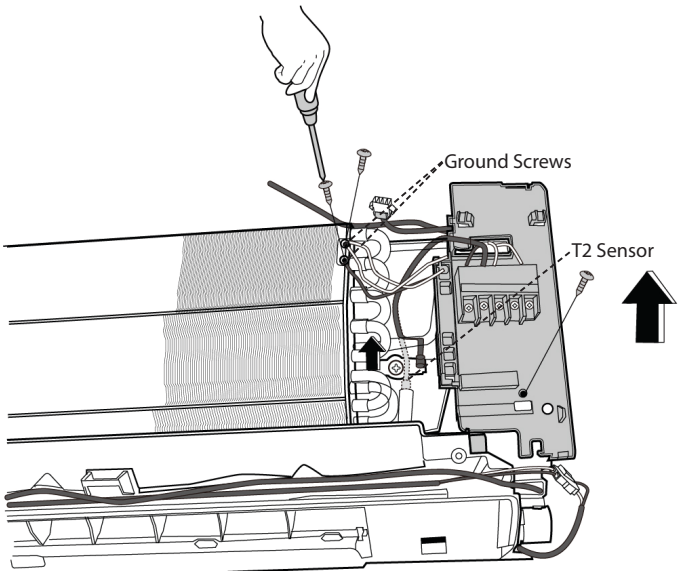

PROCEDURES	ILLUSTRATION
4. Pull out the electrical main board along the direction indicated in the image. (see illustration)	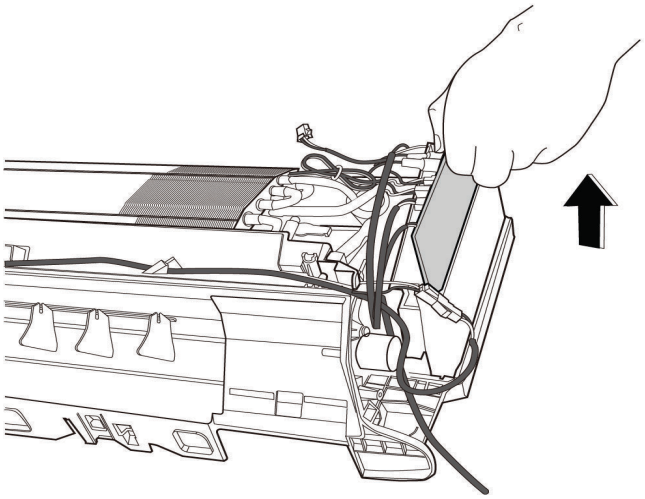
5. Disconnect the connectors and remove main control board. (see illustration)	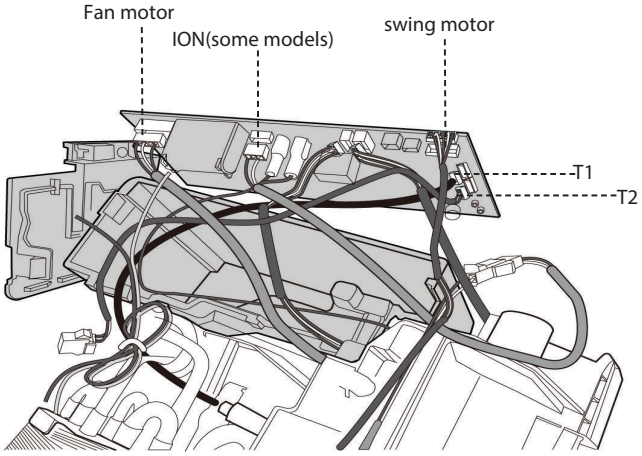

9K - 24K Evaporator

PROCEDURES	ILLUSTRATION
1. Disassemble the pipe holder located at the rear of the unit (see illustration)	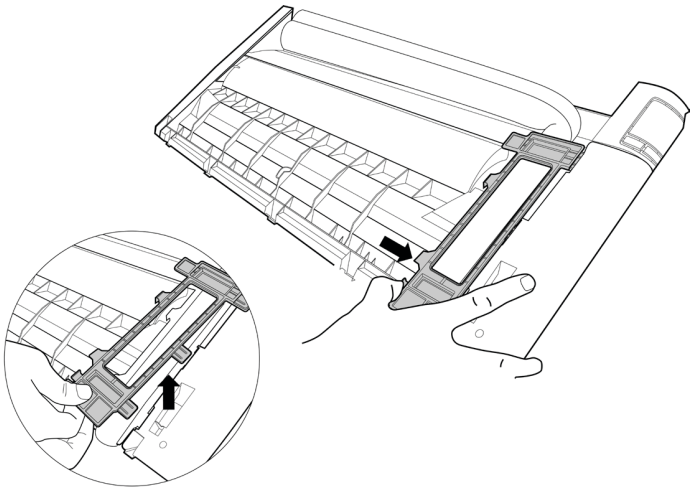
2. Remove the 1 screw on the evaporator located at the plate (see illustration)	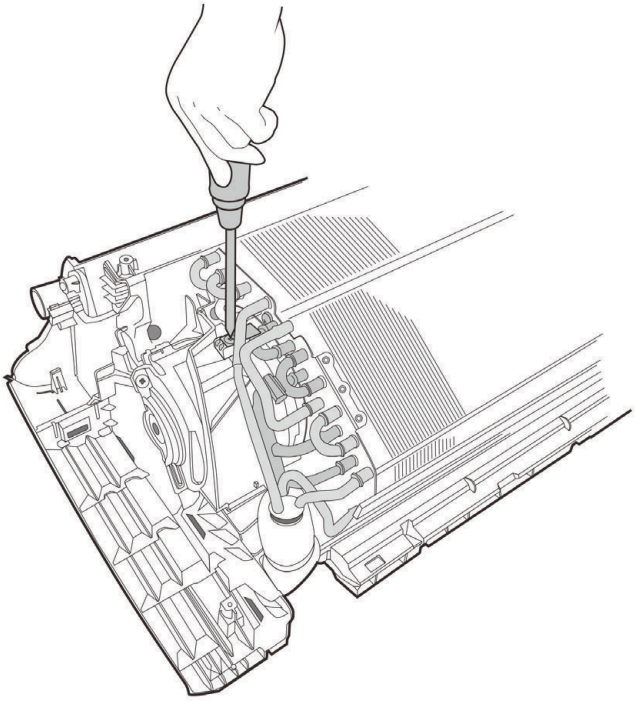

PROCEDURES	ILLUSTRATION
3. Remove 1 screw and release the hook on the evaporator (see illustration)	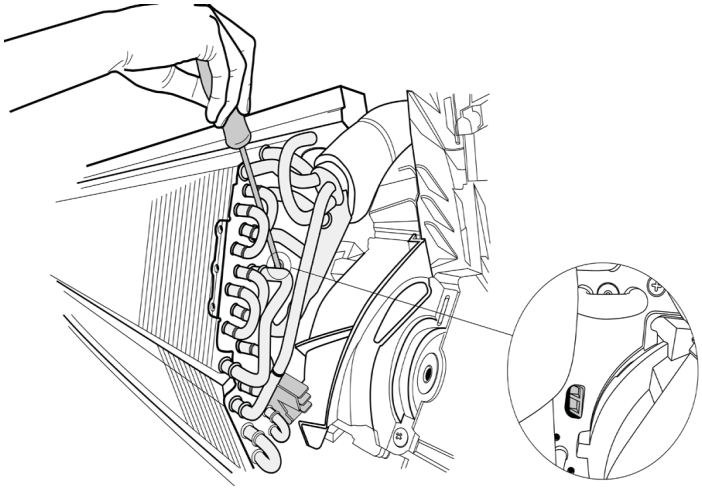
4. Remote the 2 screws on the evaporator located at the fixed plate (see illustration)	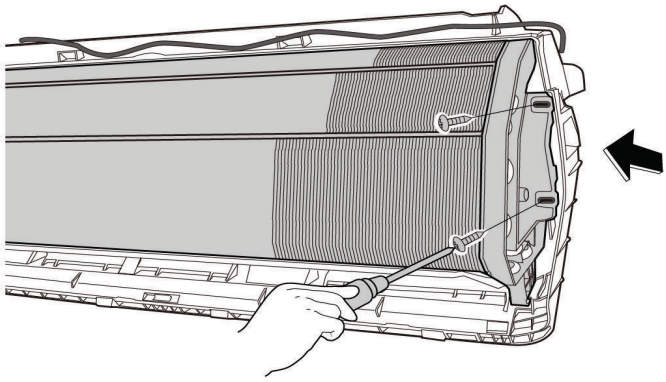
5. Remove the evaporator.	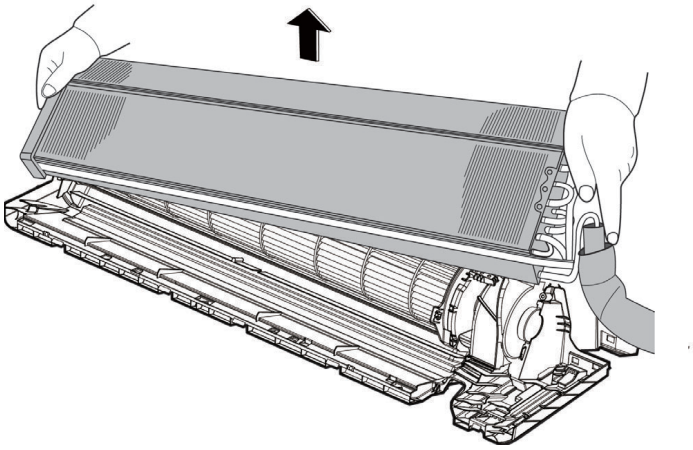

9K - 24K Fan Motor and Fan

PROCEDURES	ILLUSTRATION
1. Remove the two screws and remove the fixing board of the fan motor. (see illustration)	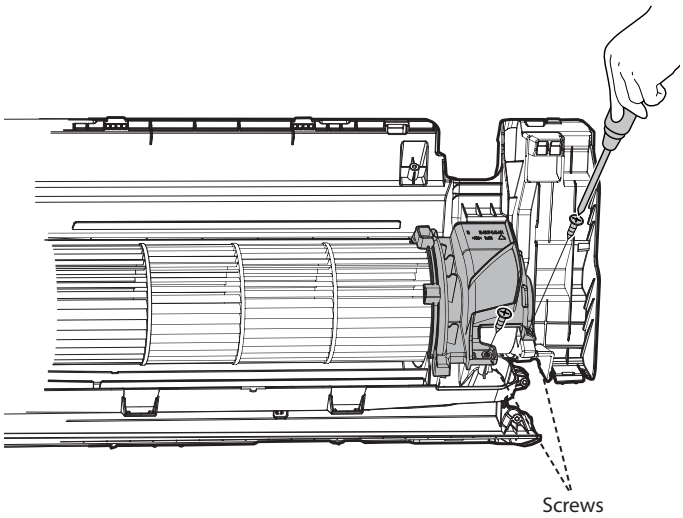
2. Remove the bearing sleeve (see illustration)	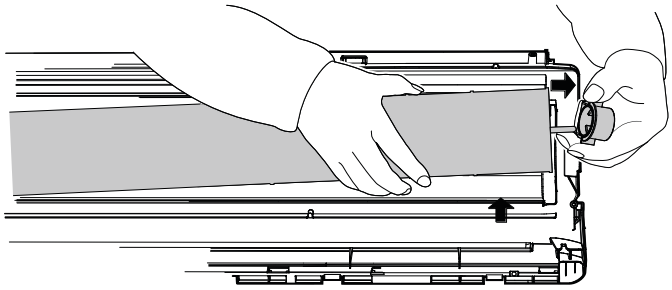
3. Remove the fixing screw (see illustration) 4. Pull out the fan motor and fan assembly from the side. (see illustration)	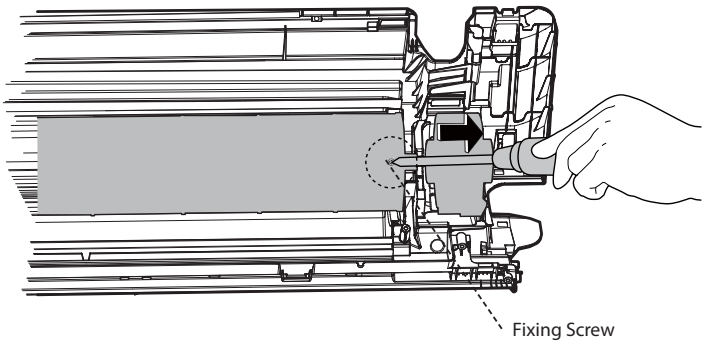

9K - 24K Step Motor

PROCEDURES	ILLUSTRATION
1. Remove the two screws, then remove the horizontal swing motor. (see illustration)	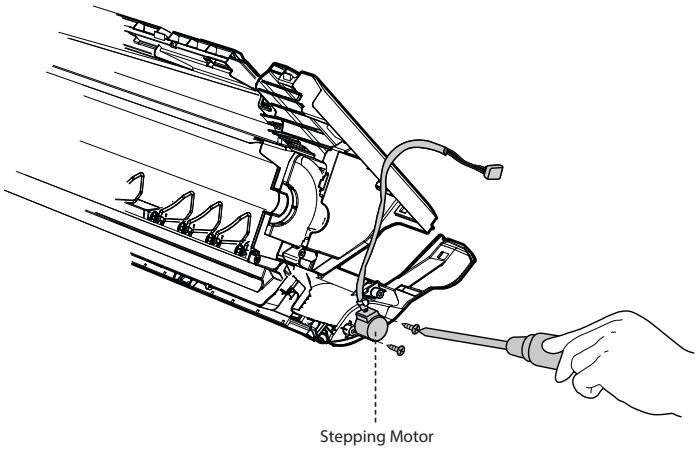
2. Remove 1 screw, then remove the vertical swing motor (for some units). (see illustration) 3. Remove 1 screw, then remove the ionizer generator (for some units).	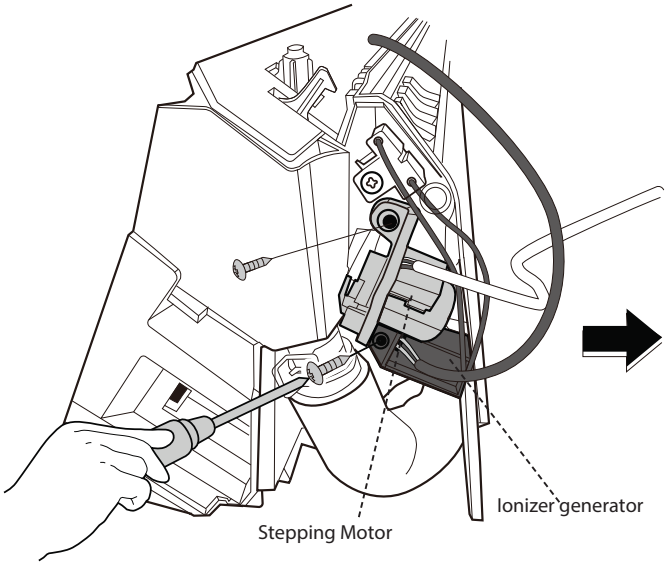

9K - 24K Drain Hose

PROCEDURES	ILLUSTRATION
1. Rotate the fixed wire clockwise indicated in image. (see illustration)	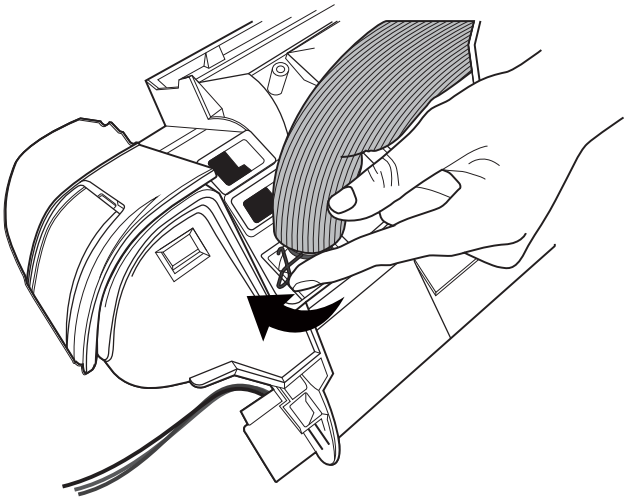
2. Pull up the drain hose to remove it. (see illustration)	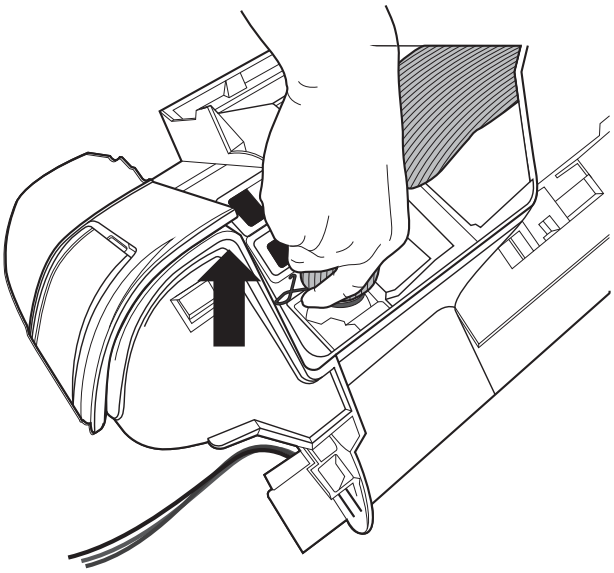

DISASSEMBLY INSTRUCTIONS - 30K - 36K Units
30K - 36K Front Panel

PROCEDURES	ILLUSTRATION
1. Hold the front panel by the tabs on both sides and lift it. (see illustration)	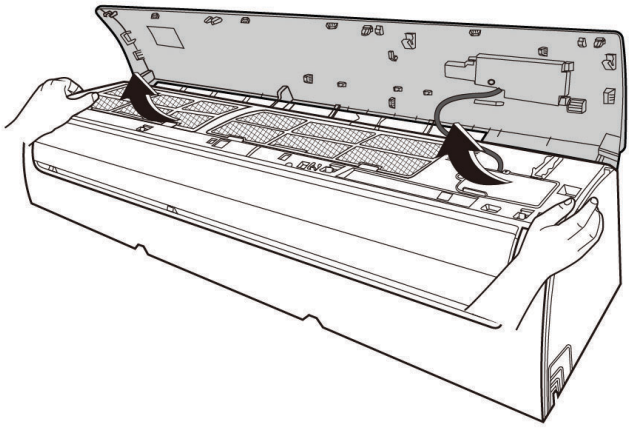
2. Push up the bottom of the air filter. (see illustration) 3. Pull it downwards to remove.	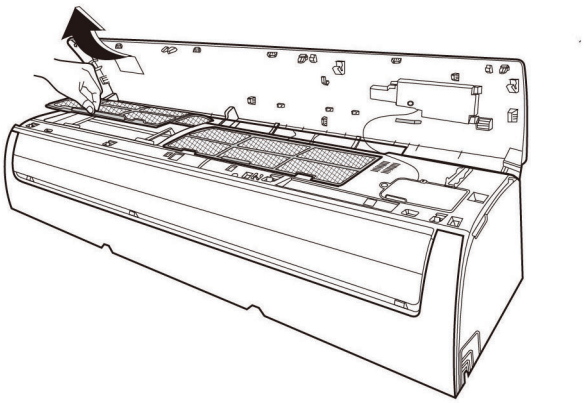

PROCEDURES	ILLUSTRATION
4. Open the horizontal louver (below) and bend the louver lightly to loosen the left most hook, then push the hook towards the right to loosen the second hook. (see illustration) 5. Remove the horizontal louver (below) towards the left. (see illustration)	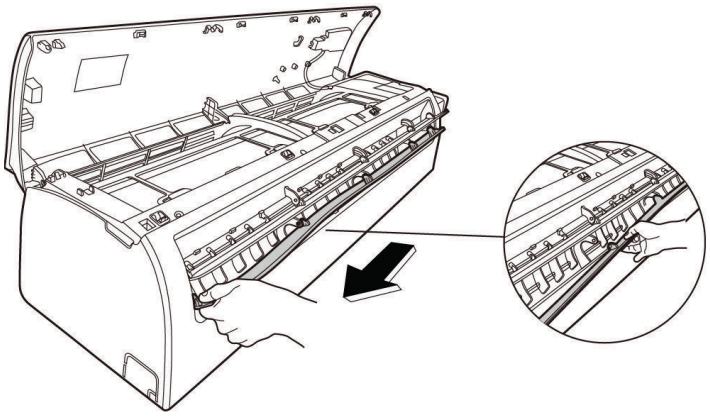
6. Remove the horizontal louver the same way.. (see illustration)	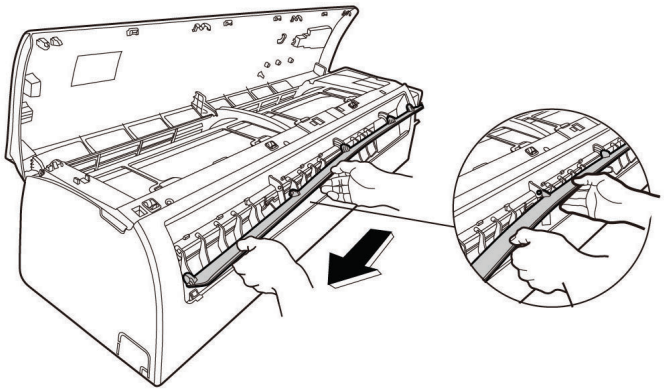

PROCEDURES	ILLUSTRATION
7. Pry the electrical cover with a screw driver, and rotate it towards the left, then remove it. (see illustration)	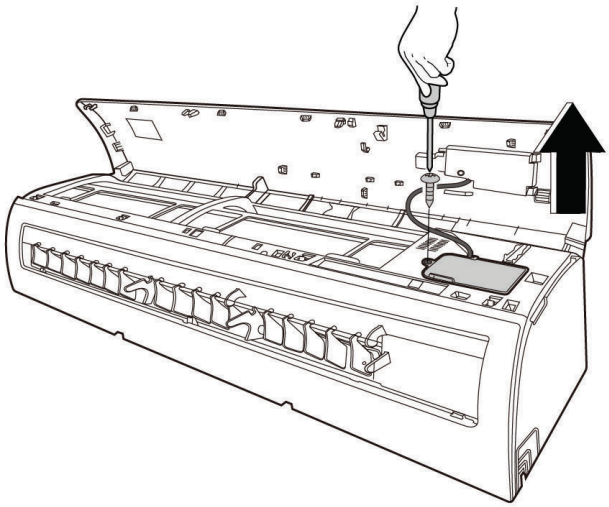
8. Pull out the connector wire, then disconnect the connector from the display board.	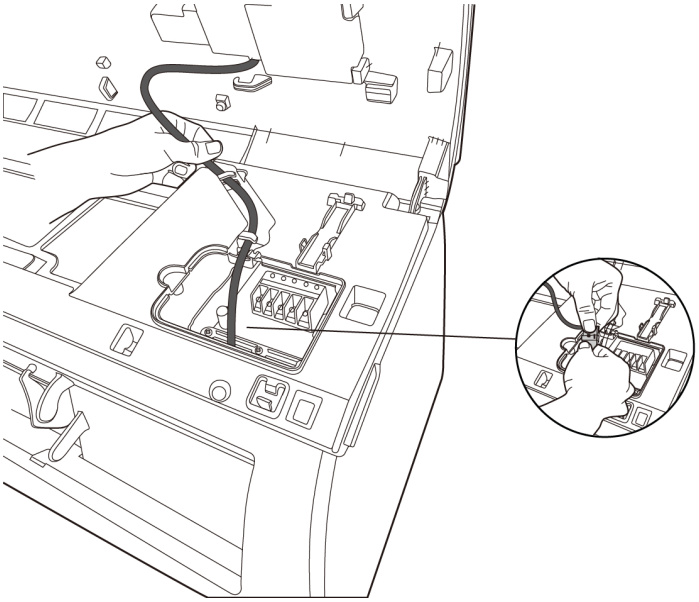

PROCEDURES	ILLUSTRATION
9. Slide the front panel side to side to release each axis..	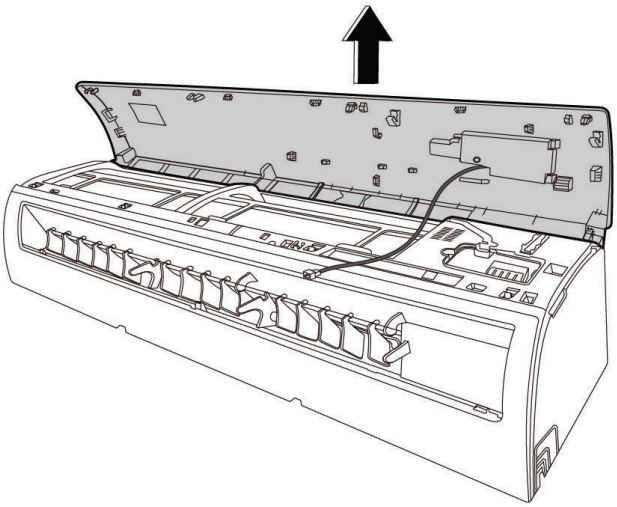
10. Open the screw cap then remove the 4 screws. 11. Remove the 4 screws securing the panel frame.	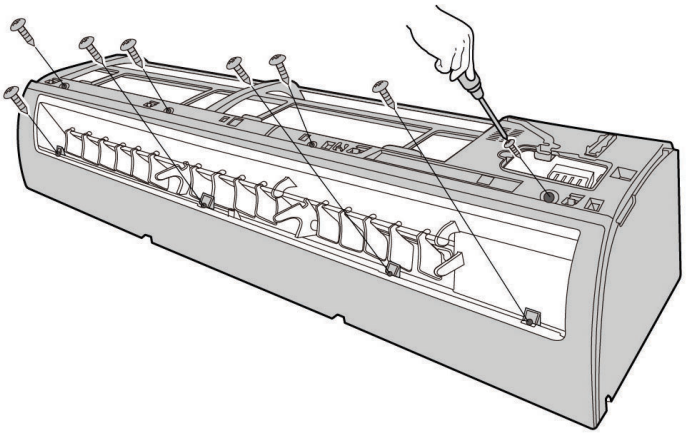

PROCEDURES	ILLUSTRATION
12. Use your hands to release the hooks.	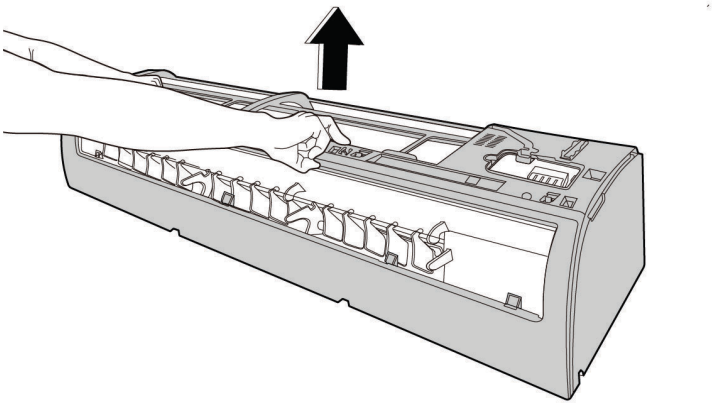
13. Release the 5 hooks in the back.	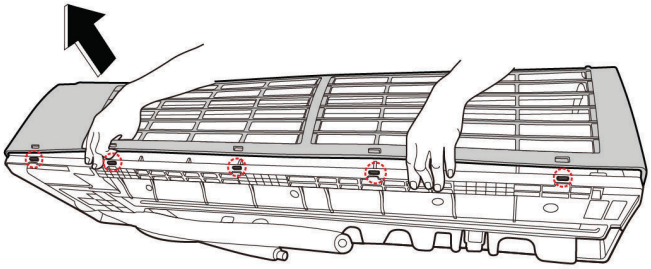
14. Pull out the panel frame while pushing the hook through a clearance between the panel frame and the heat exchanger.	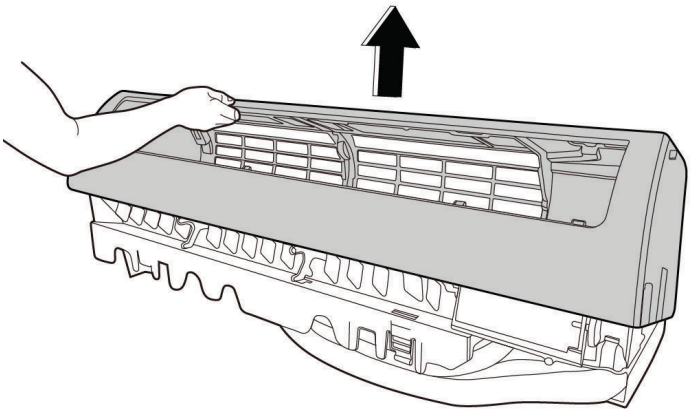

PROCEDURES	ILLUSTRATION
15. Remove 1 screw of the display board. 16. Rotate the display board in the direction shown in the right picture. 17. Remove the transfer box in the direction of the arrow.	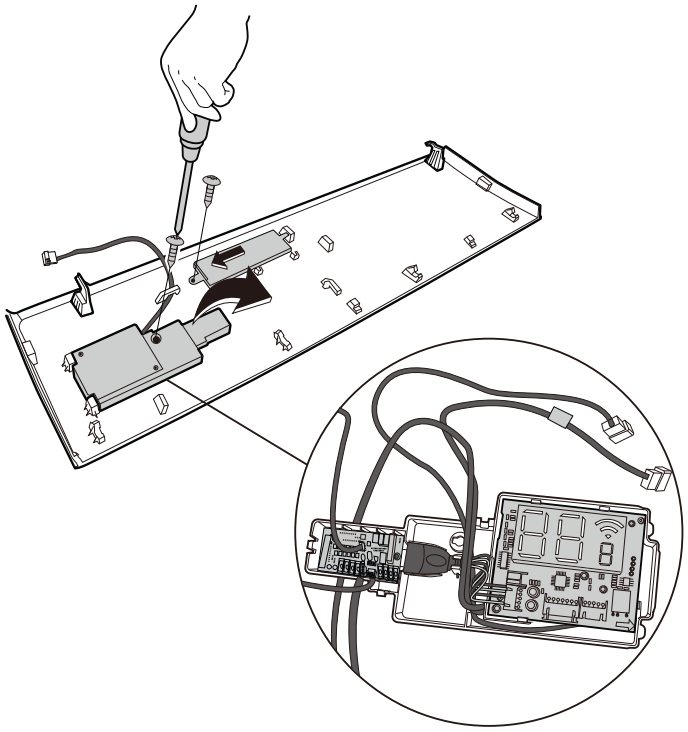
18. Open the transfer box, and then remove the transfer board.	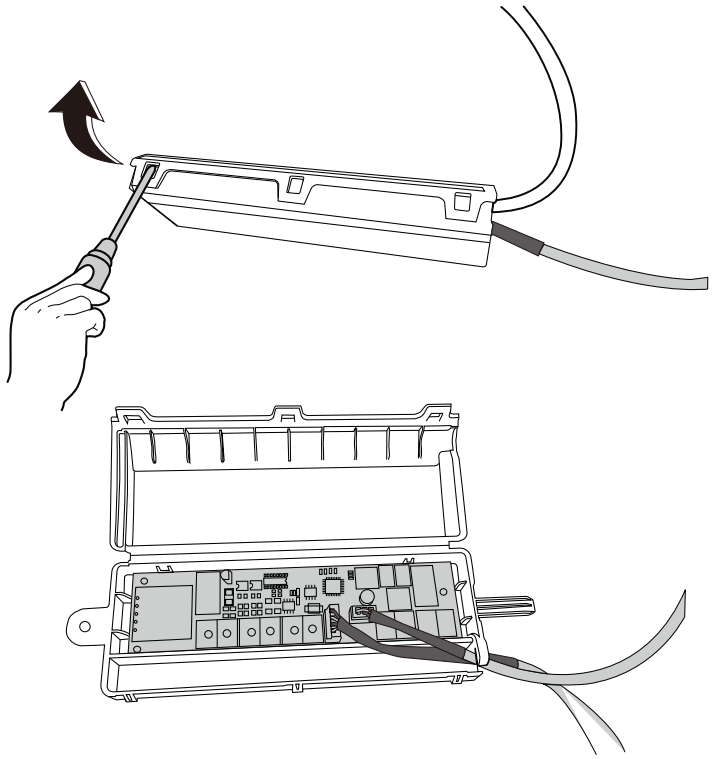

30K - 36K Electrical Parts

PROCEDURES	ILLUSTRATION
1. Remove the 2 screws from the electrical control box subassembly. (see illustration).	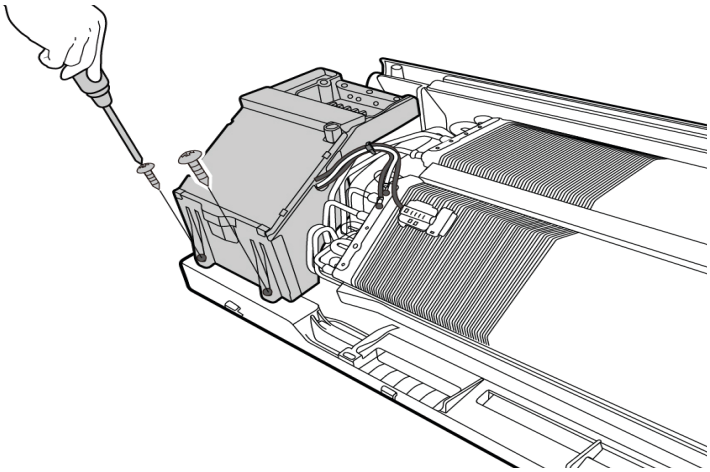
2. Disconnect the connectors. (see illustration). **NOTE:** To repair the electrical control box components, perform the steps 1 and 2. To repair the main control board assembly, perform steps 3 through 7.	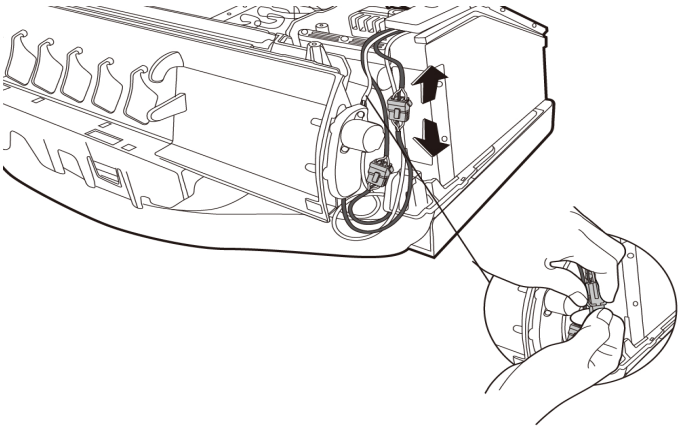

PROCEDURES	ILLUSTRATION
3. Use a shear to cut the ribbon, then pull out the coil temperature sensor. (see illustration) 4. Remove one screw from the electronic control box and the two screws used for the ground connection. 5. Remove the temperature sensor clamp.	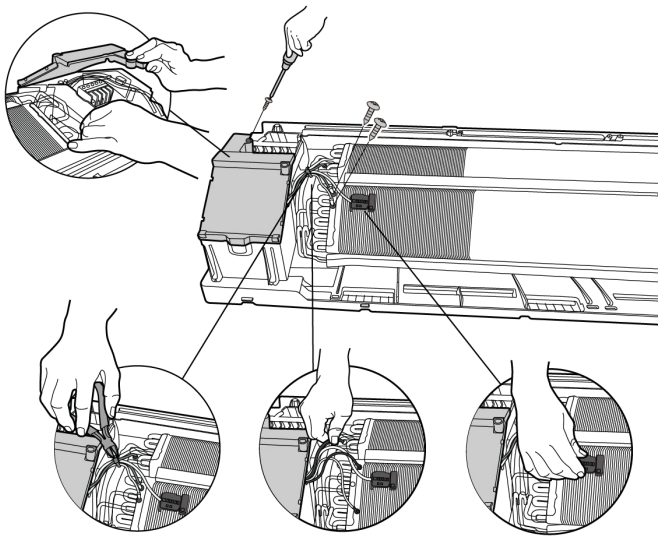
6. Pull out the electrical main board along the direction shown in the figure to the right. (see illustration)	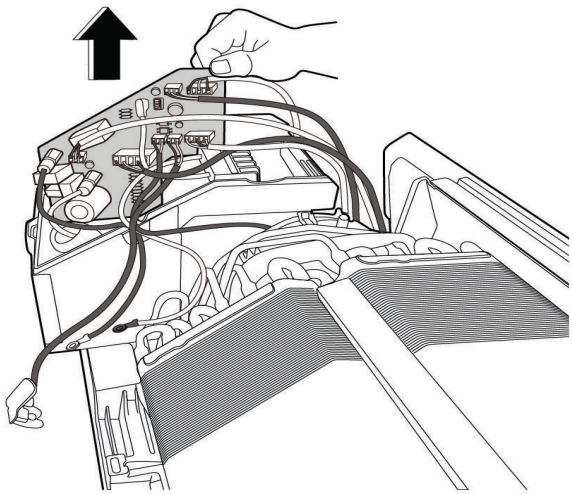
7. Disconnect the connectors and remove the main control board.	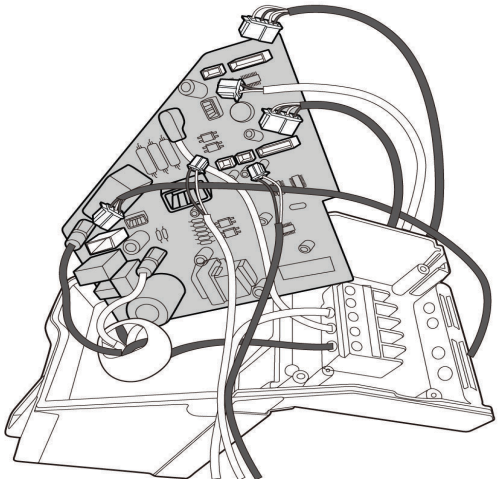

30K - 36K Evaporator

PROCEDURES	ILLUSTRATION
1. Disassemble the pipe holder located at the rear of the unit (see illustration)	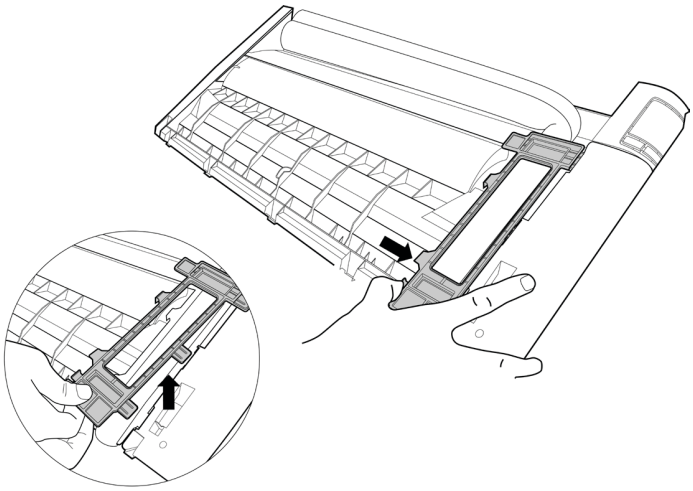
2. Remove the 3 screws on the evaporator located at the fixed plate. (see illustration)	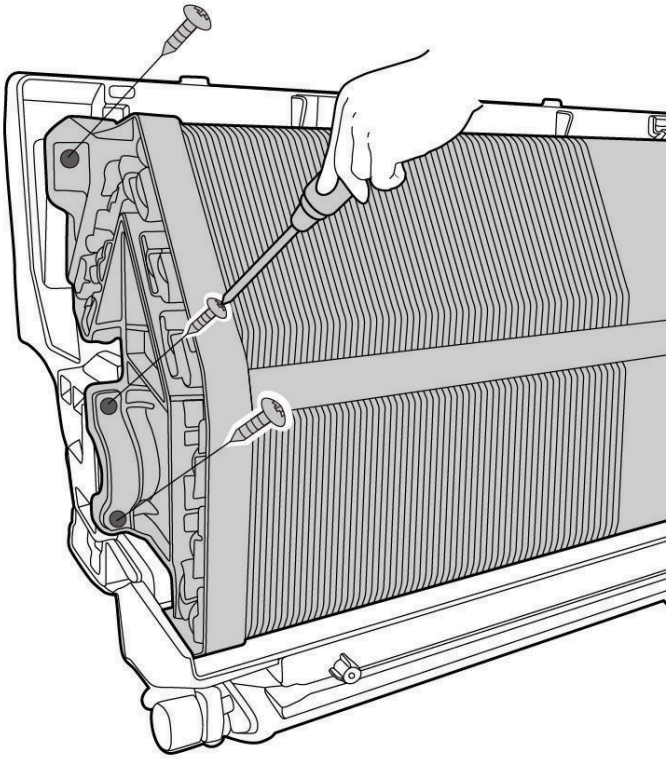

PROCEDURES	ILLUSTRATION
3. Remote the 4 screws securing the fan motor cover. (see illustration)	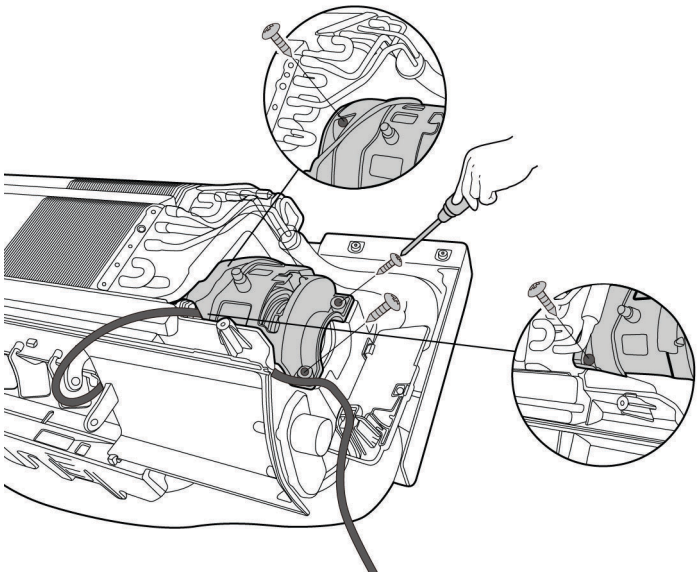
4. Remove the evaporator.	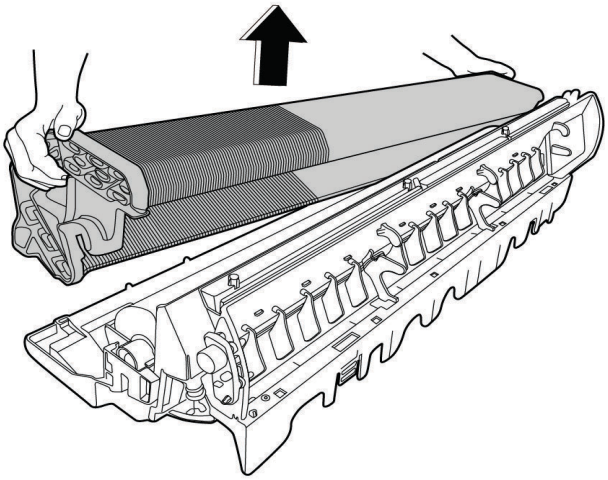

30K - 36K Fan Motor and Fan

PROCEDURES	ILLUSTRATION
1. Remove the bearing sleeve. (see illustration)	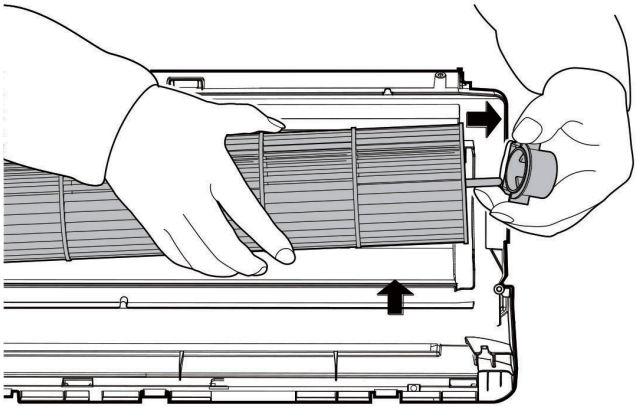
2. Remove the screw. (see illustration) 3. Pull out the fan motor and fan assembly from the side.	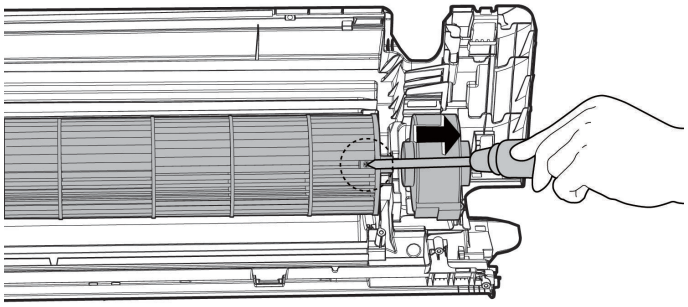

30K - 36K Step Motor

PROCEDURES	ILLUSTRATION
1. Remove the two screws, then remove the horizontal swing motor. (see illustration)	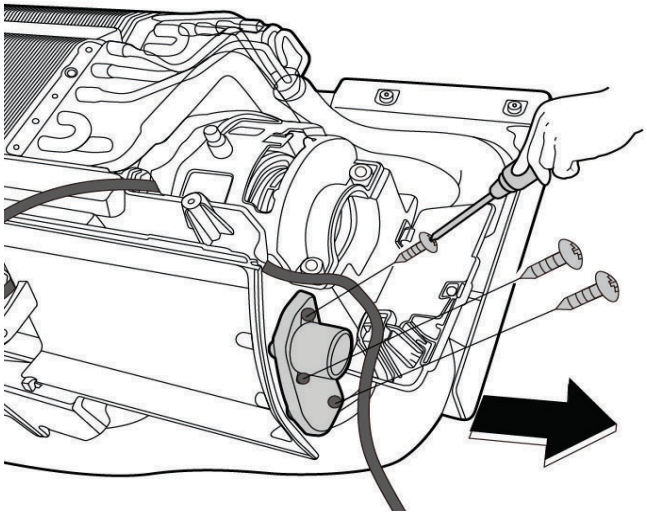
2. Remove 1 screw, then remove the vertical swing motor (for some units). (see illustration) 3. Remove 1 screw, then remove the ionizer generator (for some units).	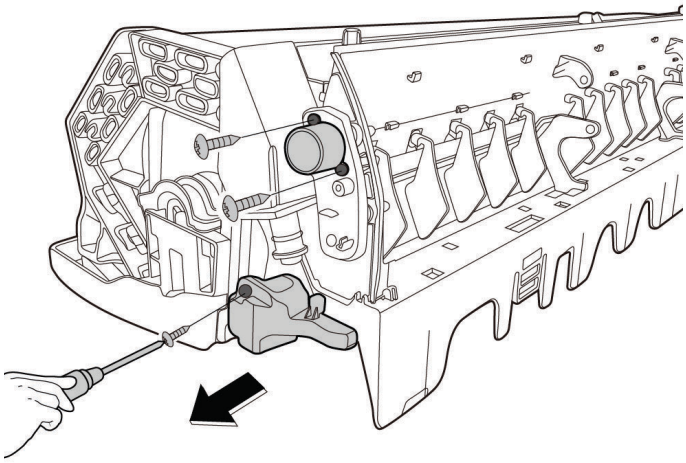

PROCEDURES	ILLUSTRATION
4. Remove 1 screw, then remove the positive and negative ion generator.	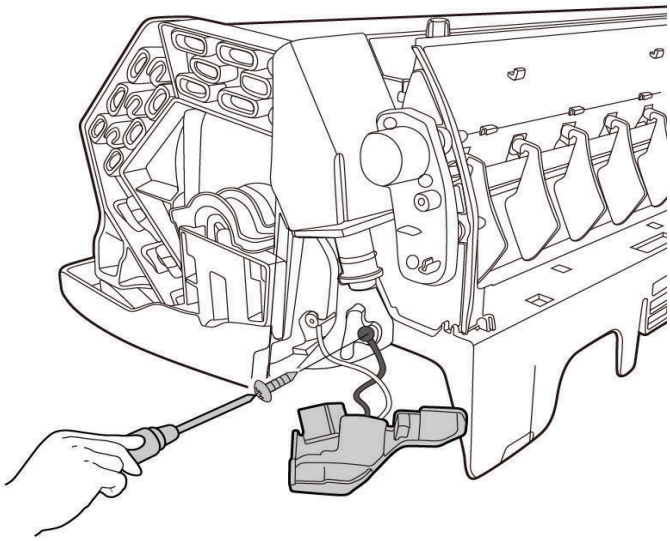
5. Remove 2 screws, then remove the vertical swing motor.	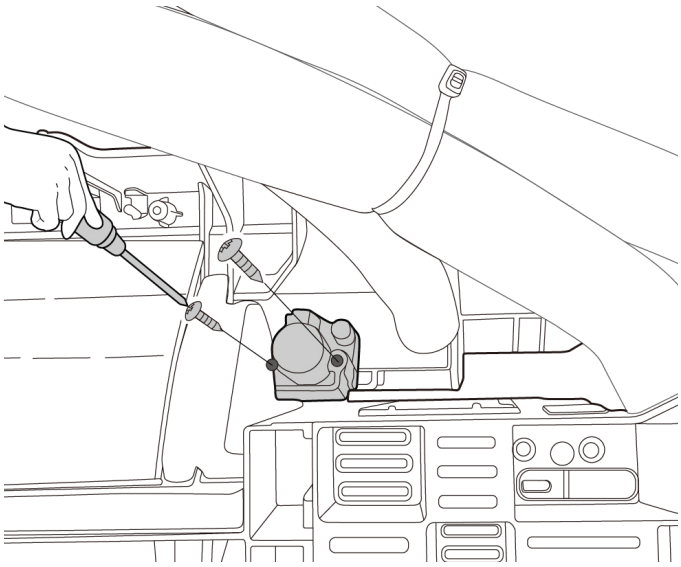

30K - 36K Drain Hose

PROCEDURES	ILLUSTRATION
1. Pull up the drain hose to remove it. (see illustration)	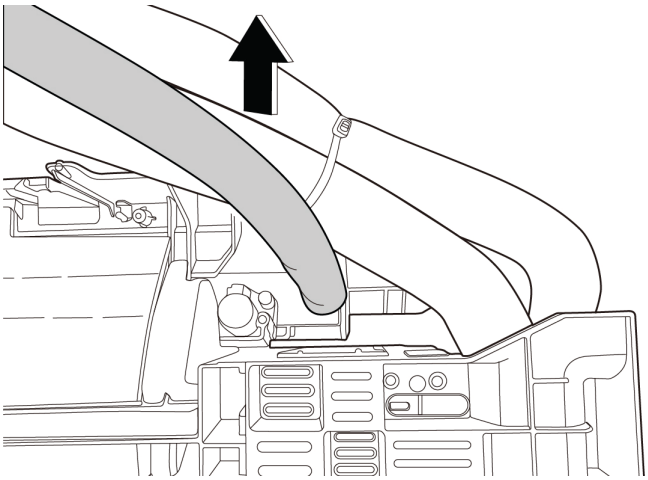

APPENDIX

Temperature Sensor Resistance Value Table for TP (°C - K)

°C	°F	K Ohm	°C	°F	K Ohm	°C	°F	K Ohm	°C	°F	K Ohm
-20	-4	542.7	20	68	68.66	60	140	13.59	100	212	3.702
-19	-2	511.9	21	70	65.62	61	142	13.11	101	214	3.595
-18	0	483	22	72	62.73	62	144	12.65	102	216	3.492
-17	1	455.9	23	73	59.98	63	145	12.21	103	217	3.392
-16	3	430.5	24	75	57.37	64	147	11.79	104	219	3.296
-15	5	406.7	25	77	54.89	65	149	11.38	105	221	3.203
-14	7	384.3	26	79	52.53	66	151	10.99	106	223	3.113
-13	9	363.3	27	81	50.28	67	153	10.61	107	225	3.025
-12	10	343.6	28	82	48.14	68	154	10.25	108	226	2.941
-11	12	325.1	29	84	46.11	69	156	9.902	109	228	2.86
-10	14	307.7	30	86	44.17	70	158	9.569	110	230	2.781
-9	16	291.3	31	88	42.33	71	160	9.248	111	232	2.704
-8	18	275.9	32	90	40.57	72	162	8.94	112	234	2.63
-7	19	261.4	33	91	38.89	73	163	8.643	113	235	2.559
-6	21	247.8	34	93	37.3	74	165	8.358	114	237	2.489
-5	23	234.9	35	95	35.78	75	167	8.084	115	239	2.422
-4	25	222.8	36	97	34.32	76	169	7.82	116	241	2.357
-3	27	211.4	37	99	32.94	77	171	7.566	117	243	2.294
-2	28	200.7	38	100	31.62	78	172	7.321	118	244	2.233
-1	30	190.5	39	102	30.36	79	174	7.086	119	246	2.174
0	32	180.9	40	104	29.15	80	176	6.859	120	248	2.117
1	34	171.9	41	106	28	81	178	6.641	121	250	2.061
2	36	163.3	42	108	26.9	82	180	6.43	122	252	2.007
3	37	155.2	43	109	25.86	83	181	6.228	123	253	1.955
4	39	147.6	44	111	24.85	84	183	6.033	124	255	1.905
5	41	140.4	45	113	23.89	85	185	5.844	125	257	1.856
6	43	133.5	46	115	22.89	86	187	5.663	126	259	1.808
7	45	127.1	47	117	22.1	87	189	5.488	127	261	1.762
8	46	121	48	118	21.26	88	190	5.32	128	262	1.717
9	48	115.2	49	120	20.46	89	192	5.157	129	264	1.674
10	50	109.8	50	122	19.69	90	194	5	130	266	1.632
11	52	104.6	51	124	18.96	91	196	4.849	?	?	?
12	54	99.69	52	126	18.26	92	198	4.703	?	?	?
13	55	95.05	53	127	17.58	93	199	4.562	?	?	?
14	57	90.66	54	129	16.94	94	201	4.426	?	?	?
15	59	86.49	55	131	16.32	95	203	4.294	?	?	?
16	61	82.54	56	133	15.73	96	205	4.167	?	?	?
17	63	78.79	57	135	15.16	97	207	4.045	?	?	?
18	64	75.24	58	136	14.62	98	208	3.927	?	?	?
19	66	71.86	59	138	14.09	99	210	3.812	?	?	?

Manufacturer reserves the right to change, at any time, specifications and designs without notice and without obligations.

Other Temperature Sensors Resistance Value Table (°C - K)

°C	°F	K Ohm	°C	°F	K Ohm	°C	°F	K Ohm	°C	°F	K Ohm
-20	-4	115.266	20	68	12.6431	60	140	2.35774	100	212	0.62973
-19	-2	108.146	21	70	12.0561	61	142	2.27249	101	214	0.61148
-18	0	101.517	22	72	11.5	62	144	2.19073	102	216	0.59386
-17	1	96.3423	23	73	10.9731	63	145	2.11241	103	217	0.57683
-16	3	89.5865	24	75	10.4736	64	147	2.03732	104	219	0.56038
-15	5	84.219	25	77	10	65	149	1.96532	105	221	0.54448
-14	7	79.311	26	79	9.55074	66	151	1.89627	106	223	0.52912
-13	9	74.536	27	81	9.12445	67	153	1.83003	107	225	0.51426
-12	10	70.1698	28	82	8.71983	68	154	1.76647	108	226	0.49989
-11	12	66.0898	29	84	8.33566	69	156	1.70547	109	228	0.486
-10	14	62.2756	30	86	7.97078	70	158	1.64691	110	230	0.47256
-9	16	58.7079	31	88	7.62411	71	160	1.59068	111	232	0.45957
-8	18	56.3694	32	90	7.29464	72	162	1.53668	112	234	0.44699
-7	19	52.2438	33	91	6.98142	73	163	1.48481	113	235	0.43482
-6	21	49.3161	34	93	6.68355	74	165	1.43498	114	237	0.42304
-5	23	46.5725	35	95	6.40021	75	167	1.38703	115	239	0.41164
-4	25	44	36	97	6.13059	76	169	1.34105	116	241	0.4006
-3	27	41.5878	37	99	5.87359	77	171	1.29078	117	243	0.38991
-2	28	39.8239	38	100	5.62961	78	172	1.25423	118	244	0.37956
-1	30	37.1988	39	102	5.39689	79	174	1.2133	119	246	0.36954
0	32	35.2024	40	104	5.17519	80	176	1.17393	120	248	0.35982
1	34	33.3269	41	106	4.96392	81	178	1.13604	121	250	0.35042
2	36	31.5635	42	108	4.76253	82	180	1.09958	122	252	0.3413
3	37	29.9058	43	109	4.5705	83	181	1.06448	123	253	0.33246
4	39	28.3459	44	111	4.38736	84	183	1.03069	124	255	0.3239
5	41	26.8778	45	113	4.21263	85	185	0.99815	125	257	0.31559
6	43	25.4954	46	115	4.04589	86	187	0.96681	126	259	0.30754
7	45	24.1932	47	117	3.88673	87	189	0.93662	127	261	0.29974
8	46	22.5662	48	118	3.73476	88	190	0.90753	128	262	0.29216
9	48	21.8094	49	120	3.58962	89	192	0.8795	129	264	0.28482
10	50	20.7184	50	122	3.45097	90	194	0.85248	130	266	0.2777
11	52	19.6891	51	124	3.31847	91	196	0.82643	131	268	0.27078
12	54	18.7177	52	126	3.19183	92	198	0.80132	132	270	0.26408
13	55	17.8005	53	127	3.07075	93	199	0.77709	133	271	0.25757
14	57	16.9341	54	129	2.95896	94	201	0.75373	134	273	0.25125
15	59	16.1156	55	131	2.84421	95	203	0.73119	135	275	0.24512
16	61	15.3418	56	133	2.73823	96	205	0.70944	136	277	0.23916
17	63	14.6181	57	135	2.63682	97	207	0.68844	137	279	0.23338
18	64	13.918	58	136	2.53973	98	208	0.66818	138	280	0.22776
19	66	13.2631	59	138	2.44677	99	210	0.64862	139	282	0.22231

Manufacturer reserves the right to change, at any time, specifications and designs without notice and without obligations.

System Pressure Table-R454B

Pressure			Temperature		Pressure			Temperature	
Kpa	bar	PSI	°C	°F	Kpa	bar	PSI	°C	°F
58.196	0.58	8.44	-60	-76	935.23	9.35	135.64	8	46.4
61.517	0.62	8.92	-59	-74.2	963.75	9.64	139.78	9	48.2
64.988	0.65	9.43	-58	-72.4	992.93	9.93	144.01	10	50
68.615	0.69	9.95	-57	-70.6	1022.8	10.23	148.34	11	51.8
72.402	0.72	10.50	-56	-68.8	1053.3	10.53	152.76	12	53.6
76.354	0.76	11.07	-55	-67	1084.5	10.85	157.29	13	55.4
80.478	0.80	11.67	-54	-65.2	1116.4	11.16	161.91	14	57.2
84.776	0.85	12.30	-53	-63.4	1149	11.49	166.64	15	59
89.256	0.89	12.95	-52	-61.6	1182.3	11.82	171.47	16	60.8
93.923	0.94	13.62	-51	-59.8	1216.3	12.16	176.40	17	62.6
98.781	0.99	14.33	-50	-58	1251.1	12.51	181.45	18	64.4
103.84	1.04	15.06	-49	-56.2	1286.6	12.87	186.60	19	66.2
109.1	1.09	15.82	-48	-54.4	1322.8	13.23	191.85	20	68
114.56	1.15	16.61	-47	-52.6	1359.9	13.60	197.23	21	69.8
120.25	1.20	17.44	-46	-50.8	1397.7	13.98	202.71	22	71.6
126.15	1.26	18.30	-45	-49	1436.3	14.36	208.31	23	73.4
132.28	1.32	19.18	-44	-47.2	1475.7	14.76	214.02	24	75.2
138.64	1.39	20.11	-43	-45.4	1515.9	15.16	219.85	25	77
145.24	1.45	21.06	-42	-43.6	1557	15.57	225.82	26	78.8
152.09	1.52	22.06	-41	-41.8	1598.9	15.99	231.89	27	80.6
159.18	1.59	23.09	-40	-40	1641.6	16.42	238.09	28	82.4
166.54	1.67	24.15	-39	-38.2	1685.2	16.85	244.41	29	84.2
174.15	1.74	25.26	-38	-36.4	1729.7	17.30	250.86	30	86
182.04	1.82	26.40	-37	-34.6	1775	17.75	257.43	31	87.8
190.2	1.90	27.59	-36	-32.8	1821.3	18.21	264.15	32	89.6
198.65	1.99	28.81	-35	-31	1868.4	18.68	270.98	33	91.4
207.39	2.07	30.08	-34	-29.2	1916.5	19.17	277.95	34	93.2
216.42	2.16	31.39	-33	-27.4	1965.6	19.66	285.08	35	95
225.76	2.26	32.74	-32	-25.6	2015.5	20.16	292.31	36	96.8
235.41	2.35	34.14	-31	-23.8	2066.5	20.67	299.71	37	98.6
245.37	2.45	35.59	-30	-22	2118.4	21.18	307.24	38	100.4
255.67	2.56	37.08	-29	-20.2	2171.3	21.71	314.91	39	102.2
266.29	2.66	38.62	-28	-18.4	2225.2	22.25	322.73	40	104
277.25	2.77	40.21	-27	-16.6	2280.2	22.80	330.70	41	105.8
288.56	2.89	41.85	-26	-14.8	2336.1	23.36	338.81	42	107.6
300.22	3.00	43.54	-25	-13	2393.2	23.93	347.09	43	109.4
312.24	3.12	45.28	-24	-11.2	2451.3	24.51	355.52	44	111.2
324.63	3.25	47.08	-23	-9.4	2510.4	25.10	364.09	45	113
337.39	3.37	48.93	-22	-7.6	2570.7	25.71	372.84	46	114.8
350.54	3.51	50.84	-21	-5.8	2632.1	26.32	381.74	47	116.6
364.08	3.64	52.80	-20	-4	2694.7	26.95	390.82	48	118.4
378.02	3.78	54.83	-19	-2.2	2758.3	27.58	400.04	49	120.2
392.37	3.92	56.91	-18	-0.4	2823.2	28.23	409.46	50	122
407.13	4.07	59.05	-17	1.4	2889.3	28.89	419.04	51	123.8

Manufacturer reserves the right to change, at any time, specifications and designs without notice and without obligations.

System Pressure Table-R454B (Continued)

Pressure			Temperature		Pressure			Temperature	
Kpa	bar	PSI	°C	°F	Kpa	bar	PSI	°C	°F
422.31	4.22	61.25	-16	3.2	2956.5	29.57	428.79	52	125.6
437.92	4.38	63.51	-15	5	3025	30.25	438.72	53	127.4
453.98	4.54	65.84	-14	6.8	3094.7	30.95	448.83	54	129.2
470.47	4.70	68.23	-13	8.6	3165.7	31.66	459.13	55	131
487.43	4.87	70.69	-12	10.4	3238.1	32.38	469.63	56	132.8
504.84	5.05	73.22	-11	12.2	3311.7	33.12	480.30	57	134.6
522.73	5.23	75.81	-10	14	3386.7	33.87	491.18	58	136.4
541.1	5.41	78.48	-9	15.8	3463	34.63	502.25	59	138.2
559.95	5.60	81.21	-8	17.6	3540.7	35.41	513.52	60	140
579.31	5.79	84.02	-7	19.4	3619.9	36.20	525.00	61	141.8
599.16	5.99	86.90	-6	21.2	3700.5	37.01	536.69	62	143.6
619.54	6.20	89.85	-5	23	3782.7	37.83	548.61	63	145.4
640.43	6.40	92.88	-4	24.8	3866.3	38.66	560.74	64	147.2
661.86	6.62	95.99	-3	26.6	3951.5	39.52	573.10	65	149
683.82	6.84	99.18	-2	28.4	4038.3	40.38	585.69	66	150.8
706.34	7.06	102.44	-1	30.2	4126.8	41.27	598.52	67	152.6
729.41	7.29	105.79	0	32	4217	42.17	611.60	68	154.4
753.06	7.53	109.22	1	33.8	4309	43.09	624.95	69	156.2
777.28	7.77	112.73	2	35.6	4402.9	44.03	638.56	70	158
802.08	8.02	116.33	3	37.4	4498.7	44.99	652.46	71	159.8
827.48	8.27	120.01	4	39.2	4596.5	45.97	666.64	72	161.6
853.49	8.53	123.78	5	41	4696.5	46.97	681.15	73	163.4
880.11	8.80	127.64	6	42.8	4798.9	47.99	696.00	74	165.2
907.35	9.07	131.60	7	44.6	4904.1	49.04	711.25	75	167

© 2025 Carrier. All rights Reserved.

Manufacturer reserves the right to change, at any time, specifications and designs without notice and without obligations.