48XT
Infinity™ 15 Packaged Hybrid Heat™ System With Puron® (R-410A) Refrigerant 2 to 5 Nominal Tons (Sizes 024-060)

Carrier®
Turn to the Experts.℠

Installation Instructions

IMPORTANT: OAT sensor must be field installed. See Accessory Installation for more details.

IMPORTANT: This Infinity™ unit is designed for use with an Infinity User Interface.

NOTE: Read the entire instruction manual before starting the installation.

TABLE OF CONTENTS

Page
SAFETY CONSIDERATIONS 2
INTRODUCTION 2
RECEIVING AND INSTALLATION 2-12
Check Equipment 2
Identify Unit 2
Inspect Shipment 2
Provide Unit Support 2
Roof Curb 2
Slab Mount 2
Ground Mount 2
Provide Clearances 7
Rig and Place Unit 7
Inspection 8
Introduction 8
Use of Rigging Bracket 8
Select and Install Ductwork 8
Converting Horizontal Discharge Units to Downflow (Vertical) Discharge Units 9
Provide for Condensate Disposal 10
Install Flue Hood 10
Install Gas Piping 10
Install Electrical Connections 11
High-Voltage Connections 11
Routing Power Leads Into Unit 12
Connecting Ground Lead to Ground Screw 12
Routing Control Power Wires 12
Accessory Installation 12
Special Procedures for 208-v Operation 12
PRE-START-UP 15
START-UP 15-26
Unit Start-Up and Troubleshooting 15
Sequence of Operation 19-25
Check for Refrigerant Leaks 25
Start-Up Adjustments 25
Checking Cooling and Heating Control Operation 25
Checking and Adjusting Refrigerant Charge 25
Refrigerant Charge 25
No Charge 25
Low Charge Cooling 25
To Use Cooling Charging Charts 26
Non-Communicating Emergency Cooling/Heating Mode . 26
MAINTENANCE 27-30
Air Filter 28
Indoor Fan and Motor 28
Combustion-Air Blower 28
Burner Ignition 28

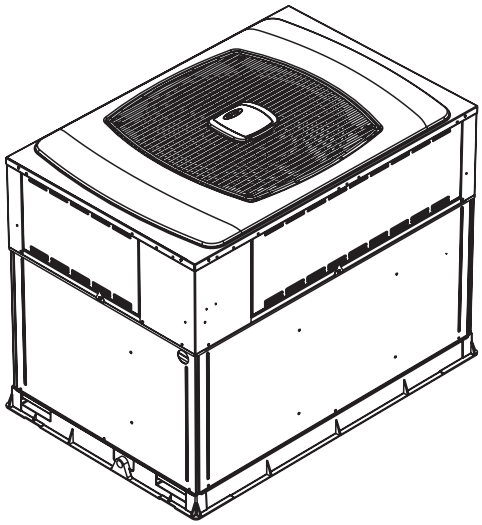

A05307

Fig. 1 - Unit 48XT

Main Burners 28
Inducer Pressure Switch 28
Outdoor Coil, Indoor Coil, and Condensate Drain Pan 28
Outdoor Fan 29
Electrical Controls and Wiring 29
Refrigerant Circuit 29
Indoor Airflow 29
Metering Devices–TXV & AccuRater® Piston 29
Pressure Switches 29
Loss-of-Charge Switch 29
High-Pressure Switches 29
Copeland Scroll Compressor (Puron® Refrigerant) 29
Refrigerant System 30
Refrigerant 30
Compressor Oil 30
Servicing Systems on Roofs with Synthetic Materials . . . 30
Liquid-Line Filter Drier 30
Puron (R-410A) Refrigerant Charging 30
TROUBLESHOOTING 30-32
FINAL CHECKS 32
CARE AND MAINTENANCE 32
START-UP CHECKLIST 36

SAFETY CONSIDERATIONS

Installation and servicing of this equipment can be hazardous due to mechanical and electrical components. Only trained and qualified personnel should install, repair, or service this equipment.

Untrained personnel can perform basic maintenance functions such as cleaning and replacing air filters. All other operations must be performed by trained service personnel. When working on this equipment, observe precautions in the literature, on tags, and on labels attached to or shipped with the unit and other safety precautions that may apply.

Follow all safety codes. Installation must be in compliance with local and national building codes. Wear safety glasses, protective clothing, and work gloves. Have fire extinguisher available. Read these instructions thoroughly and follow all warnings or cautions included in literature and attached to the unit.

Recognize safety information. This is the safety-alert symbol ⚠. When you see this symbol on the unit and in instructions or manuals, be alert to the potential for personal injury. Understand these signal words: DANGER, WARNING, and CAUTION. These words are used with the safety-alert symbol. DANGER identifies the most serious hazards which **will** result in severe personal injury or death. WARNING signifies hazards which **could** result in personal injury or death. CAUTION is used to identify unsafe practices which **may** result in minor personal injury or product and property damage. NOTE is used to highlight suggestions which **will** result in enhanced installation, reliability, or operation.

Always install furnace to operate within the intended temperature rise range with a duct system which has an external static pressure within the allowable range, as specified in "Indoor Airflow Adjustments" section of these instructions. See furnace rating plate.

⚠ WARNING

ELECTRICAL SHOCK HAZARD

Failure to follow this warning could result in personal injury or death.

Before installing or servicing system, always turn off main power to system. There may be more than one disconnect switch. Turn off accessory heater power switch if applicable.

⚠ WARNING

UNIT OPERATION AND SAFETY HAZARD

Failure to follow this warning could result in personal injury or equipment damage.

Puron (R-410A) systems operate at higher pressures than standard R-22 systems. DO NOT use R-22 service equipment or components on Puron (R-410A) equipment. Ensure service equipment is rated for Puron (R-410A).

INTRODUCTION

The 48XT packaged Hybrid Heat™ unit is a fully self-contained combination Category I gas heating/electric heat pump designed for outdoor installation (See Fig. 1). Standard units are shipped in a horizontal-discharge configuration for installation on a ground-level slab or directly on the ground if local codes permit. Standard units can be converted to downflow (vertical) discharge configurations for rooftop applications.

Models with an N in the fifth position of the model number are dedicated Low NOx units designed for California installations. These models meet the California maximum oxides of nitrogen (NOx) emissions requirements of 40 nanograms/joule or less as shipped from the factory and must be installed in California Air Quality Management Districts or any other regions in North America where a Low NOx rule exists.

NOTE: Low NOx requirements apply only to natural gas installations.

RECEIVING AND INSTALLATION

Step 1—Check Equipment

IDENTIFY UNIT

The unit model number and serial number are printed on the unit informative plate. Check this information against shipping papers.

INSPECT SHIPMENT

Inspect for shipping damage while unit is still on shipping pallet. If unit appears to be damaged or is torn loose from its anchorage, have it examined by transportation inspectors before removal. Forward claim papers directly to transportation company. Manufacturer is not responsible for any damage incurred in transit. Check all items against shipping list. Immediately notify the nearest Carrier office if any item is missing. To prevent loss or damage, leave all parts in original packages until installation.

Step 2—Provide Unit Support

For hurricane tie downs, contact distributor for details and PE (Professional Engineering) Certificate, if required.

ROOF CURB

Install accessory roof curb in accordance with instructions shipped with curb (See Fig. 4). Install insulation, cant strips, roofing, and flashing. Ductwork must be attached to curb.

IMPORTANT: The gasketing of the unit to the roof curb is critical for a water tight seal. Install gasketing material supplied with the roof curb. Improperly applied gasketing also can result in air leaks and poor unit performance.

Curb should be level to within 1/4 in. (See Fig. 2). This is necessary for unit drain to function properly. Refer to accessory roof curb installation instructions for additional information as required.

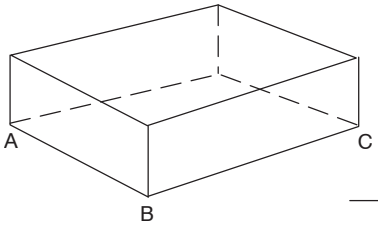

MAXIMUM ALLOWABLE DIFFERENCE (in.)

A-B	B-C	A-C
1/4	1/4	1/4

C99065

Fig. 2 - Unit Leveling Tolerances

SLAB MOUNT

Place the unit on a solid, level concrete pad that is a minimum of 4 in. thick with 2 in. above grade. The slab should extend approximately 2 in. beyond the casing on all 4 sides of the unit (See Fig. 3). Do not secure the unit to the slab *except* when required by local codes.

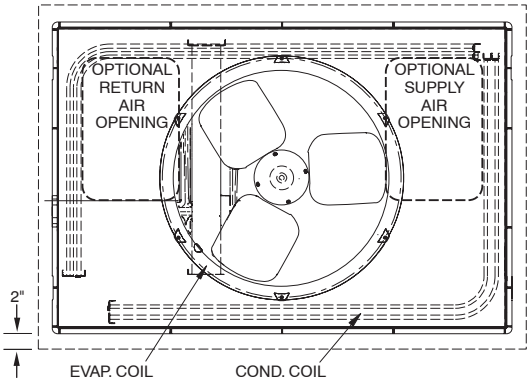

C99096

Fig. 3 - Slab Mounting Detail

GROUND MOUNT

The unit may be installed either on a slab or placed directly on the ground if local codes permit. Place the unit on level ground prepared with gravel for condensate discharge.

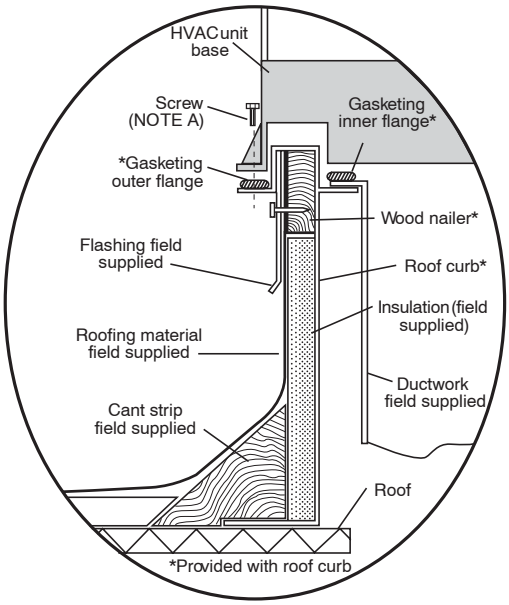

Roof Curb for Small Cabinet

Note A: When unit mounting screw is used, retainer bracket must also be used.

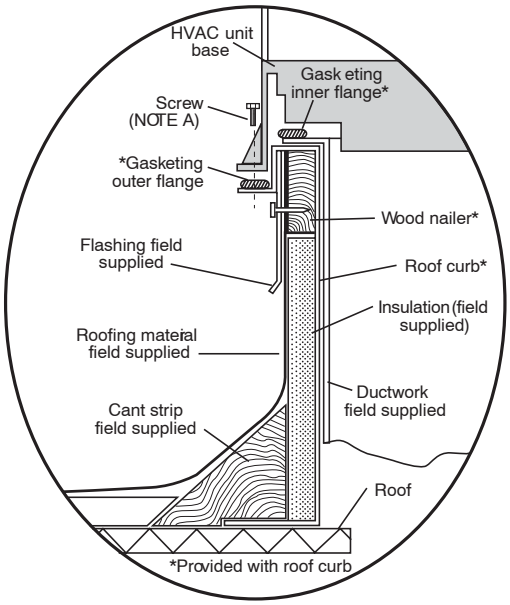

Roof Curb for Large Cabinet

Note A: When unit mounting screw is used, retainer bracket must also be used.

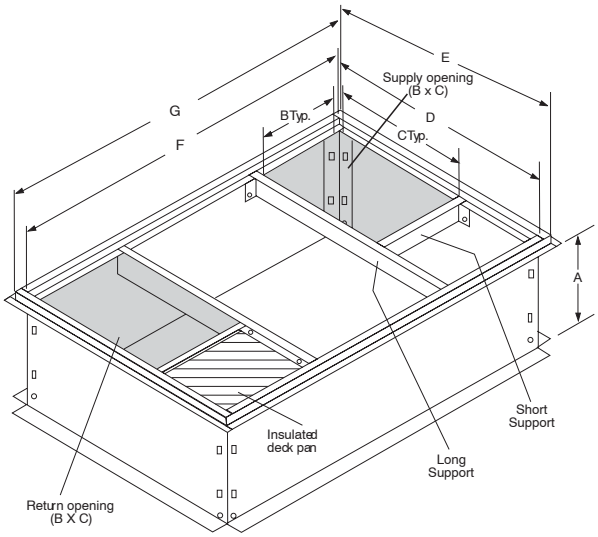

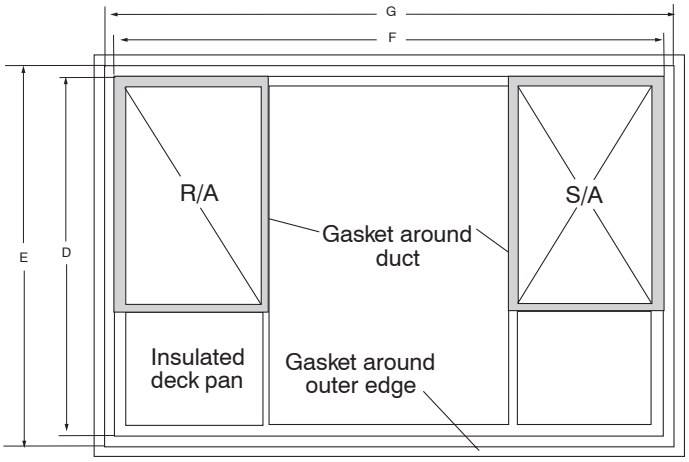

A05308

UNIT SIZE	ODS CATALOG NUMBER	A IN. (MM)	B IN. (MM)	C IN. (MM)	D IN. (MM)	E IN. (MM)	F IN. (MM)	G IN. (MM)
024-030	CPRFCURB006A00	8 (203)	11 (279)	16-1/2 (419)	28-3/4 (730)	30-3/8 (771)	44-5/16 (1126)	45-15/16 (1167)
	CPRFCURB007A00	14 (356)	11 (279)	16-1/2 (419)	28-3/4 (730)	30-3/8 (771)	44-5/16 (1126)	45-15/16 (1167)
036-060	CPRFCURB008A00	8 (203)	16-3/16 (411)	17-3/8 (441)	40-1/4 (1022)	41-15/16 (1065)	44-7/16 (1129)	46-1/16 (1169)
	CPRFCURB009A00	14 (356)	16-3/16 (411)	17-3/8 (441)	40-1/4 (1022)	41-15/16 (1065)	44-7/16 (1129)	46-1/16 (1169)

NOTES:

1. Roof curb must be set up for unit being installed.
2. Seal strip must be applied, as required, to unit being installed.
3. Dimensions are in inches.
4. Dimension in ( ) are in millimeters.
5. Roof curb is made of 16-gauge steel.
6. Attach ductwork to curb (flanges of duct rest on curb).
7. Insulated panels: 1-in. thick fiberglass 1 lb. density.
8. When unit mounting screw is used (see Note A), a retainer bracket must be used as well. This bracket must also be used when required by code for hurricane or seismic conditions. This bracket is available through Micrometl.

Fig. 4 - Roof Curb Dimensions

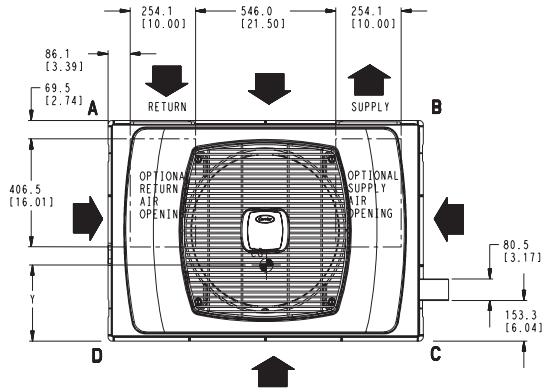

TOP VIEW

UNIT	ELECTRICAL CHARACTERISTICS	UNIT WT.		UNIT HEIGHT	CENTER OF GRAVITY MM/IN		
		LBS.	KG.	"A"	X	Y	Z
48XT024040	208/230-1-60	438	198.7	1041.9(41.02)	508.0(20.0)	489.0(19.3)	447.0(17.6)
48XT030040	208/230-1-60	468	212.3	1092.7(43.02)	508.0(20.0)	489.0(19.3)	447.0(17.6)
48XT030060	208/230-1-60	473	214.6	1092.7(43.02)	508.0(20.0)	489.0(19.3)	447.0(17.6)

CORNER WEIGHT LBS./KG.				
	A	B	C	D
024040	94/42.6	94/42.6	87/39.5	162/73.5
030040	101/45.8	101/45.8	93/42.2	173/78.5
030060	102/46.3	102/46.3	94/42.6	175/79.4

REQUIRED CLEARANCES TO COMBUSTIBLE MATL.

MILLIMETERS [IN]
TOP OF UNIT.....355.6 [14.00]
DUCT SIDE OF UNIT.....50.8 [2.00]
SIDE OPPOSITE DUCTS.....355.6 [14.00]
BOTTOM OF UNIT.....12.7 [0.50]
ELECTRIC HEAT PANEL.....914.4 [36.00]

NEC. REQUIRED CLEARANCES.

MILLIMETERS [IN]
BETWEEN UNITS, POWER ENTRY SIDE.....1066.8 [42.00]
UNIT AND UNGROUNDED SURFACES, POWER ENTRY SIDE.....914.0 [36.00]
UNIT AND BLOCK OR CONCRETE WALLS AND OTHER
GROUNDED SURFACES, POWER ENTRY SIDE.....1066.8 [42.00]

REQUIRED CLEARANCE FOR OPERATION AND SERVICING

MILLIMETERS [IN]
EVAP. COIL ACCESS SIDE.....914.0 [36.00]
POWER ENTRY SIDE.....914.0 [36.00]
(EXCEPT FOR NEC REQUIREMENTS)
UNIT TOP.....914.0 [36.00]
SIDE OPPOSITE DUCTS.....914.0 [36.00]
DUCT PANEL.....304.8 [12.00]*

*MINIMUM DISTANCES: IF UNIT IS PLACED LESS THAN 304.8 [12.00] FROM WALL SYSTEM, THEN SYSTEM PERFORMANCE MAYBE COMPROMISED.

DIMENSIONS IN [] ARE IN INCHES

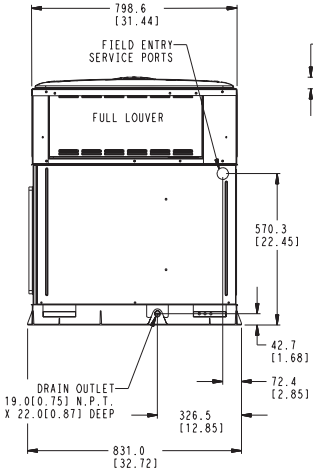

LEFT SIDE VIEW

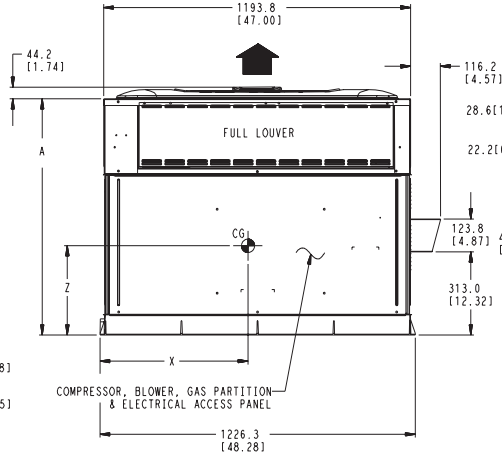

FRONT VIEW

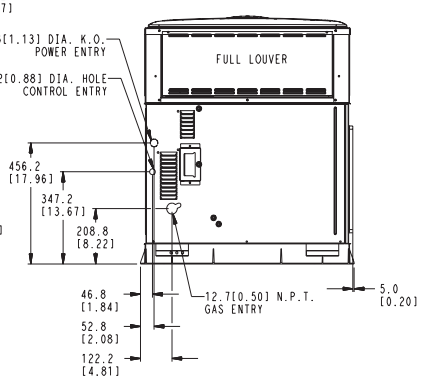

RIGHT SIDE VIEW

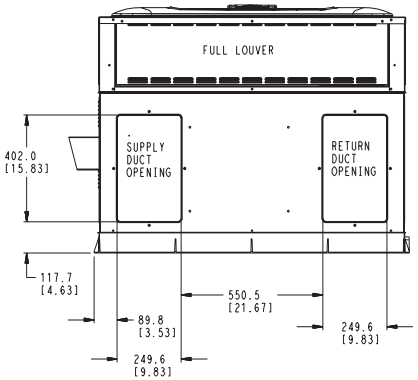

REAR VIEW

A06609

Fig. 5 - 48XT024-030 Unit Dimensions

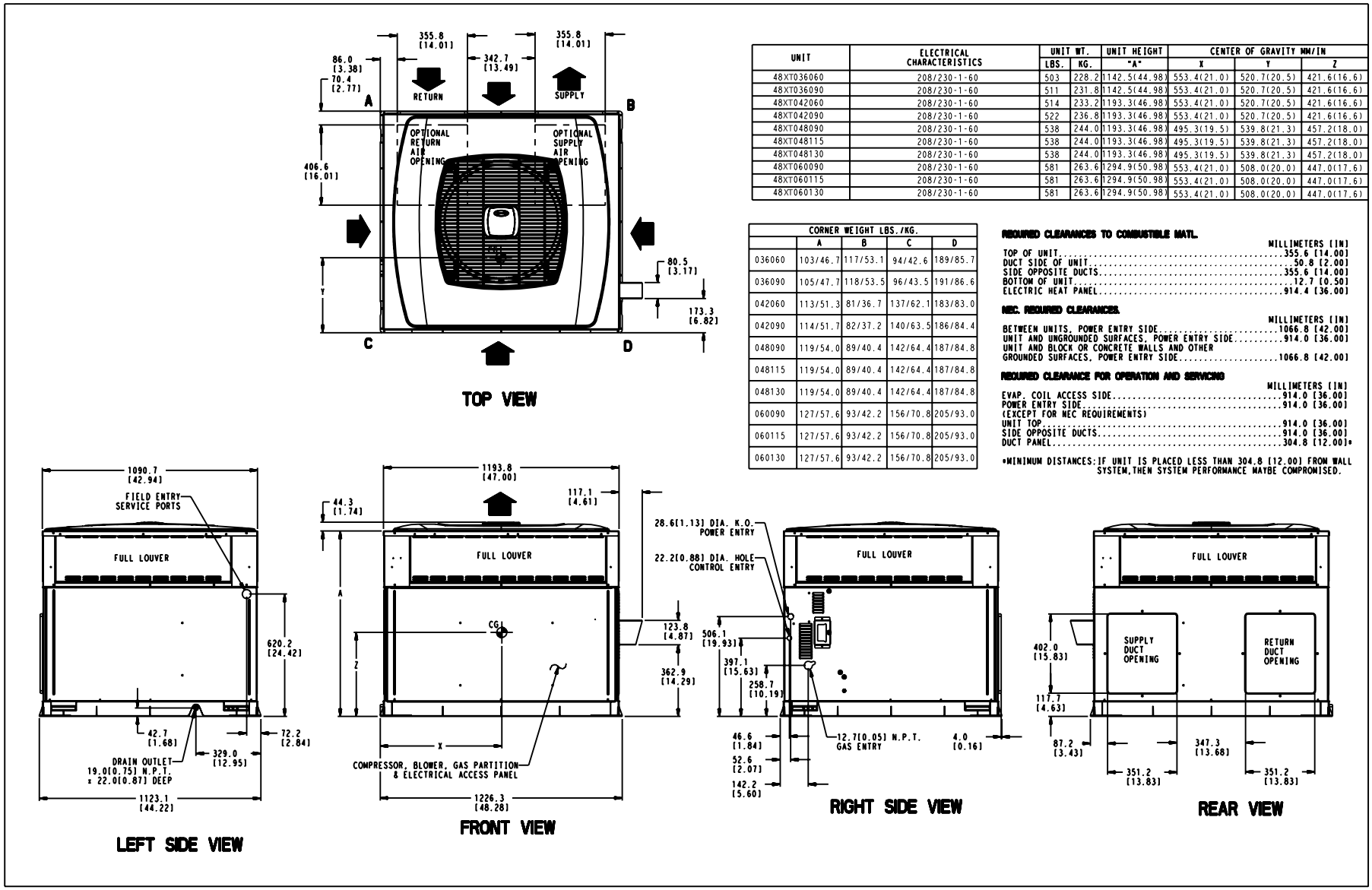

UNIT	ELECTRICAL CHARACTERISTICS	UNIT WT.		UNIT HEIGHT	CENTER OF GRAVITY MM/IN		
		LBS.	KG.	"A"	X	Y	Z
48XT036060	208/230-1-60	503	228.2	1142.5(44.98)	553.4(21.0)	520.7(20.5)	421.6(16.6)
48XT036090	208/230-1-60	511	231.8	1142.5(44.98)	553.4(21.0)	520.7(20.5)	421.6(16.6)
48XT042060	208/230-1-60	514	233.2	1193.3(46.98)	553.4(21.0)	520.7(20.5)	421.6(16.6)
48XT042090	208/230-1-60	522	236.8	1193.3(46.98)	553.4(21.0)	520.7(20.5)	421.6(16.6)
48XT048090	208/230-1-60	538	244.0	1193.3(46.98)	495.3(19.5)	539.8(21.3)	457.2(18.0)
48XT048115	208/230-1-60	538	244.0	1193.3(46.98)	495.3(19.5)	539.8(21.3)	457.2(18.0)
48XT048130	208/230-1-60	538	244.0	1193.3(46.98)	495.3(19.5)	539.8(21.3)	457.2(18.0)
48XT060090	208/230-1-60	581	263.6	1294.9(50.98)	553.4(21.0)	508.0(20.0)	447.0(17.6)
48XT060115	208/230-1-60	581	263.6	1294.9(50.98)	553.4(21.0)	508.0(20.0)	447.0(17.6)
48XT060130	208/230-1-60	581	263.6	1294.9(50.98)	553.4(21.0)	508.0(20.0)	447.0(17.6)

CORNER WEIGHT LBS./KG.				
	A	B	C	D
036060	103/46.7	117/53.1	94/42.6	189/85.7
036090	105/47.7	118/53.5	96/43.5	191/86.6
042060	113/51.3	81/36.7	137/62.1	183/83.0
042090	114/51.7	82/37.2	140/63.5	186/84.4
048090	119/54.0	89/40.4	142/64.4	187/84.8
048115	119/54.0	89/40.4	142/64.4	187/84.8
048130	119/54.0	89/40.4	142/64.4	187/84.8
060090	127/57.6	93/42.2	156/70.8	205/93.0
060115	127/57.6	93/42.2	156/70.8	205/93.0
060130	127/57.6	93/42.2	156/70.8	205/93.0

REQUIRED CLEARANCES TO COMBUSTIBLE MATL.

MILLIMETERS [IN]
TOP OF UNIT.....355.6 [14.00]
DUCT SIDE OF UNIT.....50.8 [2.00]
SIDE OPPOSITE DUCTS.....355.6 [14.00]
BOTTOM OF UNIT.....12.7 [0.50]
ELECTRIC HEAT PANEL.....914.4 [36.00]

NEC. REQUIRED CLEARANCES.

MILLIMETERS [IN]
BETWEEN UNITS, POWER ENTRY SIDE.....1066.8 [42.00]
UNIT AND UNGROUNDED SURFACES, POWER ENTRY SIDE.....914.0 [36.00]
UNIT AND BLOCK OR CONCRETE WALLS AND OTHER
GROUNDED SURFACES, POWER ENTRY SIDE.....1066.8 [42.00]

REQUIRED CLEARANCE FOR OPERATION AND SERVICING

MILLIMETERS [IN]
EVAP. COIL ACCESS SIDE.....914.0 [36.00]
POWER ENTRY SIDE.....914.0 [36.00]
(EXCEPT FOR NEC REQUIREMENTS)
UNIT TOP.....914.0 [36.00]
SIDE OPPOSITE DUCTS.....914.0 [36.00]
DUCT PANEL.....304.8 [12.00]*

*MINIMUM DISTANCES: IF UNIT IS PLACED LESS THAN 304.8 [12.00] FROM WALL SYSTEM, THEN SYSTEM PERFORMANCE MAYBE COMPROMISED.

A06598

Fig. 6 - 48XT036-060 Unit Dimensions

Table 1—Physical Data - Unit 48XT

UNIT SIZE	024040	030040	030060	036060	036090	042060	042090
NOMINAL CAPACITY (ton)	2	2–1/2	2–1/2	3	3	3–1/2	3–1/2
OPERATING WEIGHT (lb.)	438	468	473	503	511	514	522
COMPRESSORS	Two–Stage Scroll						
Quantity	1						
REFRIGERANT: PURON (R–410A) Quantity (lb.)	10.3	11.5	11.5	9.7	9.7	14.0	14.0
EXPANSION DEVICE–HEATING	AccuRater						
Orifice OD (in.) – Left	0.042	0.038	0.038	0.035	0.035	0.040	0.040
Orifice OD (in.) – Right	N/A	0.038	0.038	0.035	0.035	0.042	0.042
EXPANSION DEVICE–COOLING	TXV						
Size	2 Ton	3 Ton	3 Ton	3 Ton	3 Ton	4 Ton	4 Ton
Part Number	EA36YD129	EA36YD139	EA36YD139	EA36YD139	EA36YD139	EA36YD149	EA36YD149
OUTDOOR COIL							
Rows...Fins/in.	2...21	2...21	2...21	2...21	2...21	2...21	2...21
Face Area (sq ft)	13.6	15.3	15.3	17.5	17.5	19.4	19.4
OUTDOOR FAN							
Nominal Cfm	2700	2700	2700	2800	2800	2800	2800
Diameter (in.)	22	22	22	22	22	22	22
Motor Hp (Rpm)	1/8 (825)	1/8 (825)	1/8 (825)	1/8 (825)	1/8 (825)	1/8 (825)	1/8 (825)
INDOOR COIL							
Rows...Fins/in.	3...17	3...17	3...17	3...17	3...17	3...17	3...17
Face Area (sq ft)	3.7	3.7	3.7	4.7	4.7	4.7	4.7
INDOOR FAN							
Nominal Airflow (Cfm)							
Comfort	Variable based on Comfort Roll back (see User Interface instructions for more information).						
Efficiency	700	875	875	1050	1050	1225	1225
Max	800	1000	1000	1200	1200	1400	1400
Furnace (gas ht.) airflow–Low Stage	475	475	727	745	875	745	875
Furnace (gas ht.) airflow–High Stage	844	844	1120	1120	1410	1120	1410
Size (in.)	10x10	10x10	10x10	11x10	11x10	11x10	11x10
Motor HP (RPM)	1/2	1/2	1/2	3/4	3/4	3/4	3/4
FURNACE SECTION* **Burner Orifice No. (Qty...Drill Size)** Natural Gas	2...44	2...44	3...44	3...44	3...38	3...44	3...38
HIGH–PRESSURE SWITCH (psig)							
Cut–out	670 ±10						
Reset (Auto)	470 ± 25						
HIGH–PRESSURE SWITCH 2 (psig) (Compressor Solenoid)							
Cut–out	565 ± 15						
Reset (Auto)	455 ± 15						
LOSS–OF–CHARGE / LOW–PRESSURE SWITCH (Liquid Line) (psig)							
Cut–out	25 ± 5						
Reset (auto)	55 ± 5						
RETURN–AIR FILTERS (in.)† Throwaway	20x24x1	20x24x1	20x24x1	24x30x1	24x30x1	24x36x1	24x36x1

Continued next page.

Table 1—Physical Data Con't - Unit 48XT

UNIT SIZE	048090	048115	048130	060090	060115	060130
NOMINAL CAPACITY (ton)	4	4	4	5	5	5
OPERATING WEIGHT (lb.)	538	538	538	581	581	581
COMPRESSORS	Two-Stage Scroll					
Quantity	1					
REFRIGERANT: PURON (R-410A) Quantity (lb.)	15.5	15.5	15.5	16.0	16.0	16.0
EXPANSION DEVICE-HEATING	AccuRater					
Orifice OD (in.) - Left	0.038	0.038	0.038	0.046	0.046	0.046
Orifice OD (in.) - Right	0.046	0.046	0.046	0.046	0.046	0.046
EXPANSION DEVICE-COOLING	TXV					
Size	4 Ton	4 Ton	4 Ton	5 Ton	5 Ton	5 Ton
Part Number	EA36YD149	EA36YD149	EA36YD149	EA36YD159	EA36YD159	EA36YD159
OUTDOOR FAN						
Nominal Cfm	3300	3300	3300	3300	3300	3300
Diameter (in.)	22	22	22	22	22	22
Motor Hp (Rpm)	1/4 (1100)	1/4 (1100)	1/4 (1100)	1/3 (1110)	1/3 (1110)	1/3 (1110)
OUTDOOR COIL						
Rows...Fins/in.	2...21	2...21	2...21	2...21	2...21	2...21
Face Area (sq ft)	19.4	19.4	19.4	23.3	23.3	23.3
INDOOR COIL						
Rows...Fins/in.	3...17	3...17	3...17	4...17	4...17	4...17
Face Area (sq ft)	5.7	5.7	5.7	5.7	5.7	5.7
INDOOR FAN						
Nominal Airflow (Cfm)						
Comfort	Variable based on Comfort Roll back (see User Interface instructions for more information).					
Efficiency	1400	1400	1400	1750	1750	1750
Max	1600	1600	1600	2000	2000	2000
Furnace (gas ht.) airflow–Low Stage	815	1215	1255	845	1215	1255
Furnace (gas ht.) airflow–High Stage	1385	1885	1875	1300	1910	1920
Size (In.)	11x10	11x10	11x10	11x10	11x10	11x10
Motor HP (RPM)	3/4	3/4	3/4	1	1	1
FURNACE SECTION*						
Burner Orifice No. (Qty...Drill Size)						
Natural Gas	3...38	3...33	3...31	3...38	3...33	3...31
HIGH-PRESSURE SWITCH (psig)						
Cut-out	670 ± 10					
Reset (Auto)	470 ± 25					
HIGH-PRESSURE SWITCH 2 (psig) (Compressor Solenoid)						
Cut-out	565 ± 15					
Reset (Auto)	455 ± 15					
LOSS-OF-CHARGE / LOW-PRESSURE SWITCH (Liquid Line) (psig)						
Cut-out	25 ± 5					
Reset (auto)	55 ± 5					
RETURN-AIR FILTERS (in.)† Throwaway	24x36x1	24x36x1	24x36x1	24x36x1	24x36x1	24x36x1

*Based on altitude of 0 to 2000 ft.

†Recommended filter sizes for field-installed air filter grilles mounted on the wall or ceiling of the conditioned structure. Required filter sizes shown are based on the larger of the ARI (Air Conditioning and Refrigeration Institute) rated cooling airflow or the heating airflow velocity of 300 ft/minute for throwaway type or 450 ft/minute for high-capacity type. Air filter pressure drop for non-standard filters must not exceed 0.08 in. wg.

Step 3—Provide Clearances

The required minimum service clearances are shown in Fig. 5 and 6. Adequate ventilation and outdoor air must be provided. The outdoor fan draws air through the outdoor coil and discharges it through the top fan grille. Be sure that the fan discharge does not recirculate to the outdoor coil. Do not locate the unit in either a corner or under an overhead obstruction. The minimum clearance under a partial overhang (such as a normal house overhang) is 48 in. above the unit top. The maximum horizontal extension of a partial overhang must not exceed 48 in.

IMPORTANT: Do not restrict outdoor airflow. An air restriction at either the outdoor-air inlet or the fan discharge may be detrimental to compressor life.

Do not place the unit where water, ice, or snow from an overhang or roof will damage or flood the unit. Do not install the unit on carpeting or other combustible materials. Slab-mounted units should be at least 4 in. above the highest expected water and runoff levels. Do not use unit if it has been under water.

Step 4—Rig and Place Unit

Rigging and handling of this equipment can be hazardous for many reasons due to the installation location (roofs, elevated structures, etc.).

Only trained, qualified crane operators and ground support staff should handle and install this equipment.

When working with this equipment, observe precautions in the literature, on tags, stickers, and labels attached to the equipment, and any other safety precautions that might apply.

Training for operators of the lifting equipment should include, but not be limited to, the following:

1. Application of the lifter to the load, and adjustment of the lifts to adapt to various sizes or kinds of loads.

2. Instruction in any special operation or precaution.
3. Condition of the load as it relates to operation of the lifting kit, such as balance, temperature, etc.

Follow all applicable safety codes. Wear safety shoes and work gloves.

INSPECTION

Prior to initial use, and at monthly intervals, all rigging brackets and straps should be visually inspected for any damage, evidence of wear, structural deformation, or cracks. Particular attention should be paid to excessive wear at hoist hooking points and load support areas. Brackets or straps showing any kind of wear in these areas must not be used and should be discarded.

⚠ WARNING

ELECTRICAL SHOCK HAZARD

Failure to follow this warning could result in personal injury or death.

Before installing or servicing system, always turn off main power to system. There may be more than one disconnect switch. Turn off accessory heater power switch if applicable. Tag disconnect switch with a suitable warning label.

⚠ WARNING

UNIT FALLING HAZARD

Failure to follow this warning could result in personal injury or death.

Never stand beneath rigged units or lift over people.

INTRODUCTION

The lifting/rigging bracket is engineered and designed to be installed only on Small Packaged Products.

This bracket is to be used to rig/lift a Small Packaged Product onto roofs or other elevated structures.

⚠ WARNING

PROPERTY DAMAGE HAZARD

Failure to follow this warning could result in personal injury/death or property damage.

Rigging brackets for one unit use only. When removing a unit at the end of its useful life, use a new set of brackets.

USE OF RIGGING BRACKET

Field Installation of Rigging Bracket

1. If applicable, remove unit from shipping carton. Leave top shipping skid on the unit for use as a spreader bar to prevent the rigging straps from damaging the unit. If the skid is not available, use a spreader bar of sufficient length to protect the unit from damage.
2. Remove 4 screws in unit corner posts.
3. Attach each of the 4 metal rigging brackets under the panel rain lip (See Fig. 7). Use the screws removed in step 2 above to secure the brackets to the unit.

⚠ WARNING

PROPERTY DAMAGE HAZARD

Failure to follow this warning could result in personal injury/death or property damage.

Rigging bracket MUST be under the rain lip to provide adequate lifting.

⚠ WARNING

PROPERTY DAMAGE HAZARD

Failure to follow this warning could result in personal injury/death or property damage.

Do not strip screws when re-securing the unit. If a screw is stripped, replace the stripped one with a larger diameter screw (included).

Rigging/Lifting of Unit

1. Bend top of brackets down approximately 30 degrees from the corner posts.
2. Attach straps of equal length to the rigging brackets at opposite ends of the unit. Be sure straps are rated to hold the weight of the unit (See Fig. 7).
3. Attach a clevis of sufficient strength in the middle of the straps. Adjust the clevis location to ensure unit is lifted level with the ground.
4. After unit is securely in place detach rigging straps. Remove corner posts, screws, and rigging brackets then reinstall screws.

⚠ WARNING

UNIT FALLING HAZARD

Failure to follow this warning could result in personal injury/death or property damage.

When straps are taut, the clevis should be a minimum of 36 inches above the unit top cover.

After the unit is placed on the roof curb or mounting pad, remove the top crating.

Step 5—Select and Install Ductwork

The design and installation of the duct system must be in accordance with the standards of the NFPA for installation of non-residence type air conditioning and ventilating systems, NFPA 90A or residence type, NFPA 90B and/or local codes and ordinances.
Select and size ductwork, supply-air registers, and return air grilles according to ASHRAE (American Society of Heating, Refrigeration, and Air Conditioning Engineers) recommendations. The unit has duct flanges on the supply- and return-air openings on the side of the unit.

⚠ WARNING

ELECTRICAL OPERATION HAZARD

Failure to follow this warning could result in personal injury or death.

For vertical supply and return units, tools or parts could drop into ductwork, therefore, install a 90 degree turn in the return ductwork between the unit and the conditioned space. If a 90 degree elbow cannot be installed, then a grille of sufficient strength and density should be installed to prevent objects from falling into the conditioned space. Units with electric heaters require 90 degree elbow in supply duct.

When designing and installing ductwork, consider the following:

1. All units should have field-supplied filters or accessory filter rack installed in the return-air side of the unit. Recommended sizes for filters are shown in Table 1.
2. Avoid abrupt duct size increases and reductions. Abrupt change in duct size adversely affects air performance.

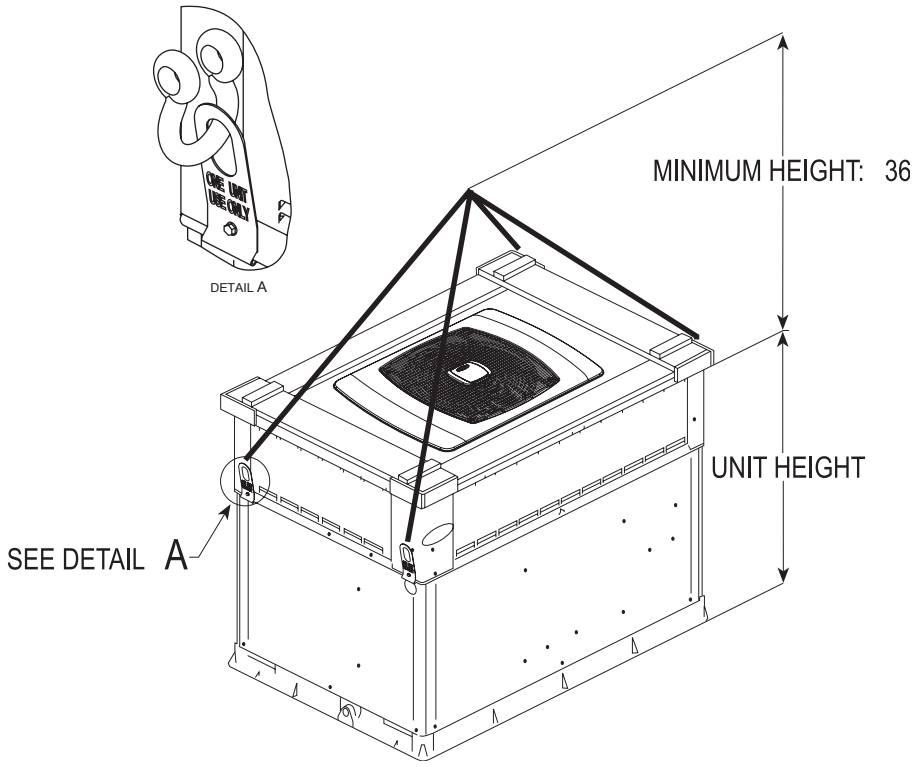

A06298

CABINET	MODEL	RIGGING WT (LB)	A	B	C	D
Small	48XT-024	462	100	100	92	171
	48XT-030	492	106	106	98	182
Large	48XT-036	533	110	123	100	200
	48XT-042	544	119	85	146	194
	48XT-048	560	124	93	148	195
	48XT-060	603	132	96	162	213

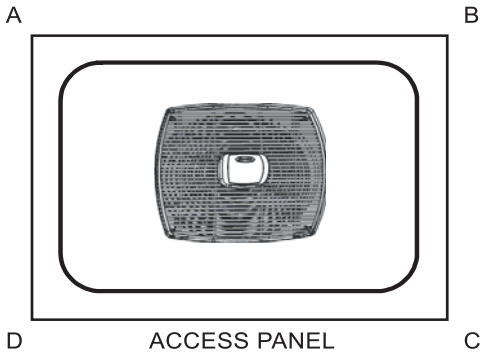

A06296

Fig. 7 - Suggested Rigging

IMPORTANT: Use flexible connectors between ductwork and unit to prevent transmission of vibration. Use suitable gaskets to ensure weather tight and airtight seal. When electric heat is installed, use fireproof canvas (or similar heat resistant material) connector between ductwork and unit discharge connection. If flexible duct is used, insert a sheet metal sleeve inside duct. Heat resistant duct connector (or sheet metal sleeve) must extend 24-in. from electric heater element.

3. Size ductwork for max possible air flow (See Table 1).
4. Seal, insulate, and weatherproof all external ductwork. Seal, insulate and cover with a vapor barrier all ductwork passing through conditioned spaces. Follow latest Sheet Metal and Air Conditioning Contractors National Association (SMACNA) and Air Conditioning Contractors Association (ACCA) minimum installation standards for residential heating and air conditioning systems.
5. Secure all ducts to building structure. Flash, weatherproof, and vibration-isolate duct openings in wall or roof according to good construction practices.

CONVERTING HORIZONTAL DISCHARGE UNITS TO DOWNFLOW (VERTICAL) DISCHARGE UNITS

⚠ WARNING

ELECTRICAL SHOCK HAZARD

Failure to follow this warning could result in personal injury or death.

Before installing or servicing system, always turn off main power to system. There may be more than one disconnect switch. Turn off accessory heater power switch if applicable.

1. Open all electrical disconnects and install lockout tag before starting any service work.
2. Remove side duct covers to access bottom return and supply knockouts.

NOTE: These panels are held in place with tabs similar to an electrical knockout.

3. Use a screwdriver and hammer to remove the panels in the bottom of the composite unit base.
4. Ensure the side duct covers are in place to block off the horizontal air openings (See Fig. 8).

Step 6—Provide for Condensate Disposal

NOTE: Ensure that condensate-water disposal methods comply with local codes, restrictions, and practices.

The units dispose of condensate through a 3/4 -in. NPT female fitting that exits on the compressor end of the unit. Condensate water can be drained directly onto the roof in rooftop installations (where permitted) or onto a gravel apron in ground level installations. Install a field-supplied condensate trap at end of condensate connection to ensure proper drainage. Make sure that the outlet of the trap is at least 1 in. lower than the drain-pan condensate connection to prevent the pan from overflowing. Prime the trap with water. When using a gravel apron, make sure it slopes away from the unit.

If the installation requires draining the condensate water away from the unit, install a field-supplied 2-in. trap at the condensate connection to ensure proper drainage. Condensate trap is available as an accessory or is field-supplied. Make sure that the outlet of the trap is at least 1 in. lower than the unit drain-pan condensate connection to prevent the pan from overflowing. Connect a drain trough using a minimum of field-supplied 3/4 -in. PVC or field-supplied 3/4 -in. copper pipe at outlet end of the 2 -in. trap (See Fig. 9). Do not undersize the tube. Pitch the drain trough downward at a slope of at least 1 in. for every 10 ft. of horizontal run. Be sure to check the drain trough for leaks. Prime the trap at the beginning of the cooling season start-up.

Step 7—Install Flue Hood

⚠ WARNING

CARBON MONOXIDE POISONING HAZARD

Failure to follow this warning could result in personal injury or death.

The venting system is designed to ensure proper venting. The flue hood assembly must be installed as indicated in this section of the unit installation instructions.

Install the flue hood as follows:

1. This installation must conform with local building codes and with the National Fuel Gas Code (NFGC), ANSI Z223.1 (in Canada, CAN/CGA B149.1, and B149.2) or NFPA (National Fire Protection Association) latest revision. Refer to provincial and local plumbing or wastewater codes and other applicable local codes.
2. Remove flue hood from shipping location (inside the return section of the blower compartment-See Fig. 8). Remove the return duct cover to locate the flue hood. Remove two screws on flue panel. Place flue hood assembly over flue panel. Orient screw holes in flue hood with holes in the flue panel.
3. Secure flue hood to flue panel by inserting a single screw on the top and the bottom of the hood.

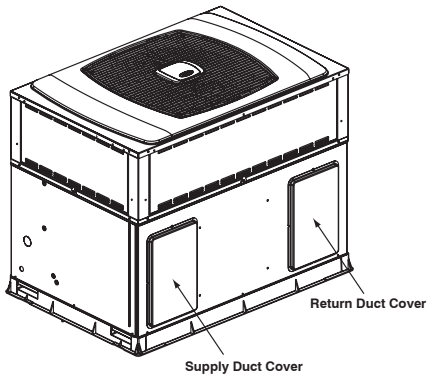

Fig. 8 - 48XT with Duct Covers On

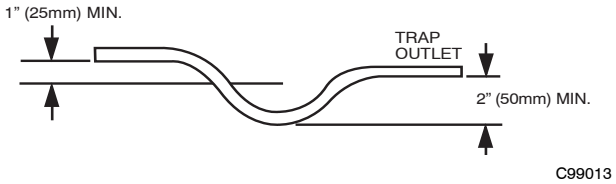

Fig. 9 - Condensate Trap

Step 8—Install Gas Piping

The gas supply pipe enters the unit through the access hole provided. The gas connection to the unit is made to the 1/2-in. FPT gas inlet on the gas valve.

Install a gas supply line that runs to the heating section. Refer to Table 2 and the current edition of NFGC in the U.S. and the current NSCNGPIC in Canada. Do not use cast-iron pipe. It is recommended that a black iron pipe is used. Check the local utility for recommendations concerning existing lines. Size gas supply piping for 0.5 in. wg maximum pressure drop. Never use pipe smaller than the 1/2-in. FPT gas inlet on the unit gas valve.

For natural gas applications, the gas pressure at unit gas connection must not be less than 4.0 in. wg or greater than 13 in. wg while the unit is operating. For propane applications, refer to propane conversion kit instructions.

A 1/8-in. NPT plugged tapping, accessible for test gauge connection, must be installed immediately upstream of the gas supply connection to the gas valve and downstream of manual equipment shutoff valve.

When installing the gas supply line, observe local codes pertaining to gas pipe installations. Refer to the NFGC ANSI Z223.1-2005 NFPA latest edition (in Canada, CAN/CGA B149.1).

NOTE:In the state of Massachusetts:

1. Gas supply connections MUST be performed by a licensed plumber or gas fitter.
2. When flexible connectors are used, the maximum length shall not exceed 36 inches (915 mm).
3. When lever handle type manual equipment shutoff valves are used, they shall be T-handle valves.
4. The use of copper tubing for gas piping is NOT approved by the state of Massachusetts.

In the absence of local building codes, adhere to the following pertinent recommendations:

1. Avoid low spots in long runs of pipe. Grade all pipe 1/4 in. for every 15 ft of length to prevent traps. Grade all horizontal runs downward to risers. Use risers to connect to heating section and to meter.
2. Protect all segments of piping system against physical and thermal damage. Support all piping with appropriate straps, hangers, etc. Use a minimum of one hanger every 6 ft. For pipe sizes larger than 1/2 in., follow recommendations of national codes.
3. Apply joint compound (pipe dope) sparingly and only to male threads of joint when making pipe connections. Use only pipe dope that is resistant to action of liquefied petroleum gases as specified by local and/or national codes. Never use Teflon tape.
4. Install sediment trap in riser leading to heating section (See Fig. 10). This drip leg functions as a trap for dirt and condensate.
5. Install an accessible, external, manual main shutoff valve in gas supply pipe within 6 ft of heating section.
6. Install ground-joint union close to heating section between unit manual shutoff and external manual main shut off valve.

Table 2—Maximum Gas Flow Capacity*

NOMINAL IRON PIPE SIZE (IN.)	INTERNAL DIAMETER (IN.)	LENGTH OF PIPE (FT)†													
		10	20	30	40	50	60	70	80	90	100	125	150	175	200
1/2	.622	175	120	97	82	73	66	61	57	53	50	44	40	—	—
3/4	.824	360	250	200	170	151	138	125	118	110	103	93	84	77	72
1	1.049	680	465	375	320	285	260	240	220	205	195	175	160	145	135
1-1/4	1.380	1400	950	770	600	580	530	490	460	430	400	360	325	300	280
1-1/2	1.610	2100	1460	1180	990	900	810	750	690	650	620	550	500	460	430

*Capacity of pipe in cu ft of gas per hr for gas pressure of 0.5 psig or less. Pressure drop of 0.5-in. wg (based on a 0.60 specific gravity gas). Refer to Table, National Fire Protection Association NFPA 54.

† This length includes an ordinary number of fittings.

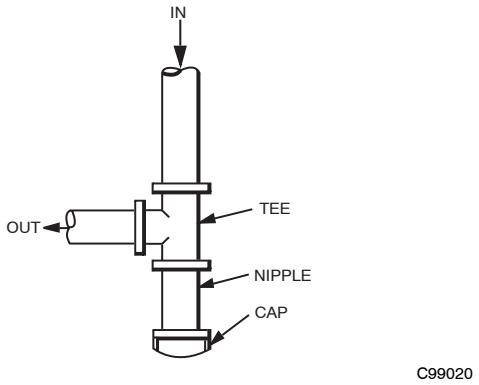

Fig. 10 - Sediment Trap

7. Pressure test all gas piping in accordance with local and national plumbing and gas codes before connecting piping to unit.

NOTE: Pressure test the gas supply system after the gas supply piping is connected to the gas valve. The supply piping must be disconnected from the gas valve during the testing of the piping systems when test pressure is in excess of 0.5 psig. Pressure test the gas supply piping system at pressures equal to or less than 0.5 psig. The unit heating section must be isolated from the gas piping system by closing the external main manual shutoff valve and slightly opening the ground-joint union.

⚠ WARNING

FIRE OR EXPLOSION HAZARD

Failure to follow this warning could result in fire, explosion, personal injury, death and/or property damage.

- Connect gas pipe to unit using a backup wrench to avoid damaging gas controls.
- Never purge a gas line into a combustion chamber. Never test for gas leaks with an open flame. Use a commercially available soap solution made specifically for the detection of leaks to check all connections.
- Use proper length of pipe to avoid stress on gas control manifold.
- If a flexible connector is required or allowed by authority having jurisdiction, black iron pipe shall be installed at furnace gas valve and extend a minimum of 2 in. outside furnace casing.
- If codes allow a flexible connector, always use a new connector. Do not use a connector which has previously serviced another gas appliance.

8. Check for gas leaks at the field-installed and factory-installed gas lines after all piping connections have been completed. Use soap-and-water solution (or method specified by local codes and/or regulations).

Step 9—Install Electrical Connections

⚠ WARNING

ELECTRICAL SHOCK HAZARD

Failure to follow this warning could result in personal injury or death.

The unit cabinet must have an uninterrupted, unbroken electrical ground. This ground may consist of an electrical wire connected to the unit ground screw in the control compartment, or conduit approved for electrical ground when installed in accordance with NEC, ANSI/NFPA American National Standards Institute/National Fire Protection Association (latest edition) (in Canada, Canadian Electrical Code CSA C22.1) and local electrical codes.

HIGH-VOLTAGE CONNECTIONS

The unit must have a separate electrical service with a field-supplied, waterproof disconnect switch mounted at, or within sight from, the unit. Refer to the unit rating plate, NEC and local codes for maximum fuse/circuit breaker size and minimum circuit amps (ampacity) for wire sizing (See Table 3 for electrical data).

The field-supplied disconnect may be mounted on the unit over the high-voltage inlet hole (See Fig. 5 and 6).

Operation of unit on improper line voltage constitutes abuse and may cause unit damage that could affect warranty.

⚠ CAUTION

UNIT COMPONENT DAMAGE HAZARD

Failure to follow this caution may result in damage to the unit being installed.

1. Make all electrical connections in accordance with NEC ANSI/NFPA (latest edition) and local electrical codes governing such wiring. In Canada, all electrical connections must be in accordance with CSA standard C22.1 Canadian Electrical Code Part 1 and applicable local codes. Refer to unit wiring diagram.
2. Use only copper conductor for connections between field-supplied electrical disconnect switch and unit. DO NOT USE ALUMINUM WIRE.
3. Be sure that high-voltage power to unit is within operating voltage range indicated on unit rating plate.
4. Insulate low-voltage wires for highest voltage contained within conduit when low-voltage control wires are in same conduit as high-voltage wires.
5. Do not damage internal components when drilling through any panel to mount electrical hardware, conduit, etc.

ROUTING POWER LEADS INTO UNIT

Use only copper wire between disconnect and unit. The high voltage leads should be in a conduit until they enter the duct panel; conduit termination at the duct panel must be watertight. Run the high-voltage leads through the power entry knockout on the power entry side panel. See Fig. 5 and 6 for location and size. For single-phase units, connect leads to the black and yellow wires.

CONNECTING GROUND LEAD TO GROUND SCREW

Connect the ground lead to the chassis using the ground screw on the control plate near the inducer switch (See Fig. 13).

ROUTING CONTROL POWER WIRES

For detailed instruction on the low voltage connections to the User Interface (UI), refer to the UI installation guide.

Form a drip-loop with the control leads before routing them into the unit. Route the low voltage control leads through grommeted, low-voltage hole provided into unit (See Fig. 5 and 6). Connect user interface leads to unit control power leads as shown in Fig. 14.

The unit transformer supplies 24-v power for complete system including accessory electrical heater. A circuit breaker is provided in the 24-v circuit as a protection device (See Fig. 16); see the caution label on the transformer. Transformer is factory wired for 230-v operation. If supply voltage is 208-v, rewire transformer primary as described in Special Procedures for 208-v Operation section.

The furnace board is fused by a board-mounted automotive fuse placed in series with transformer SEC1 and R circuit. The C circuit of transformer circuit is referenced to chassis ground through a printed circuit run at SEC2 and gas valve grounding wire. Check to be sure control board is mounted securely using both factory-installed screws.

ACCESSORY INSTALLATION

A. Outdoor Air Thermistor (OAT)

NOTE: THE INSTALLATION OF AN OUTDOOR TEMPERATURE SENSOR USING THE INFINITY™ CONTROL BOARD OAT TERMINALS IS REQUIRED. MANY INFINITY FEATURES (AUTO HUMIDITY CONTROL, COMFORT ROLLBACK, ETC.) WILL BE LOST IF THE OAT IS NOT CONNECTED.

For detailed mounting instructions for the OAT sensor, please refer to TSTATXXSEN01-B installation instructions (catalog no. 63TS-TA13); Procedures 1 through 3.

The OAT input is used to supply outdoor temperature data for system level functions and for temperature display on User Interface (UI). Using two wires of the field-supplied thermostat wire cable, wire the ends of the two black OAT pigtails. Wire the opposite ends of these two wires to the OAT provided with the UI. There is no polarity to be observed.

NOTE: Mis-wiring OAT inputs will not cause damage to either Infinity control or thermistor. If the thermistor is wired incorrectly, no reading will appear at UI. Re-wire thermistor correctly for normal operation.

B. Humidifier Connections

The furnace control board terminal marked HUM is provided for low voltage (24-vac) control of a humidifier. No humidistat is required as UI monitors indoor humidity.

When commanded to operate humidifier, the unit control will energize the HUM output to turn humidifier on and de-energize HUM output to turn humidifier off. Wire HUM and COM terminals directly to humidifier as shown in Fig. 14.

C. Electronic Air Cleaner

Electronic Air Cleaner terminals are provided on the Infinity Control Board (EAC-1 and EAC-2). While these terminals can be used to power a 230V EAC, it is recommended that any EAC be installed per the EAC installation instructions and connected separately to a standard 115V or 230V outlet with an airflow sensor to control operation of the EAC.

SPECIAL PROCEDURES FOR 208-V OPERATION

Be sure unit disconnect switch is open.

Disconnect the yellow primary lead from the transformer. See unit wiring label (See Fig. 16).

Connect the yellow primary lead to the transformer terminal labeled 200-v.

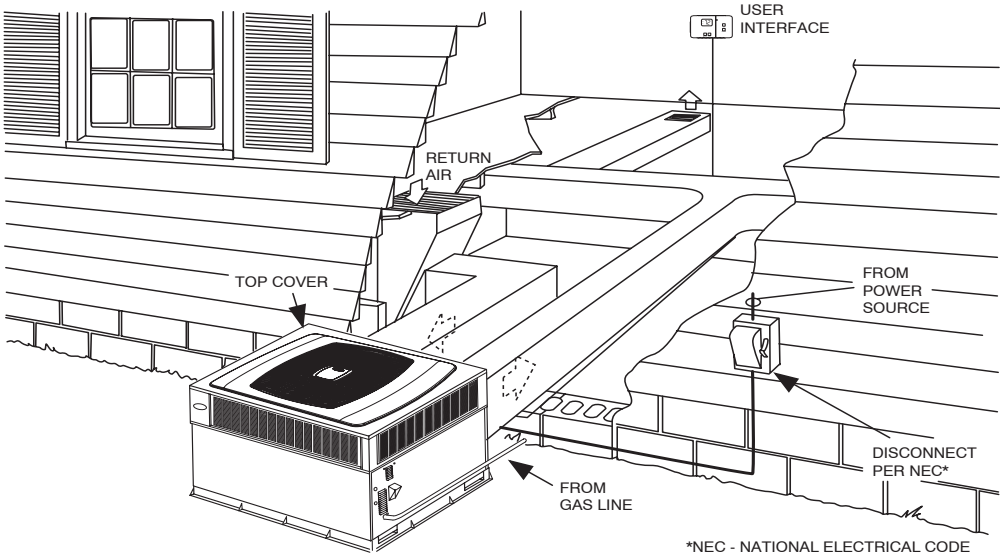

Fig. 11 - Typical Installation

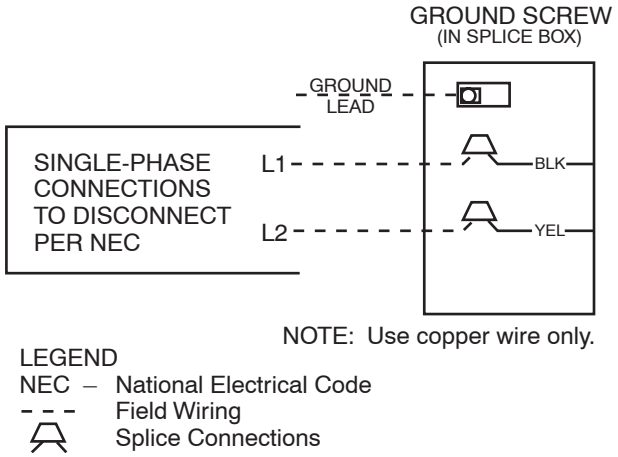

A06299

Fig. 12 - Line Power Connections

48XT

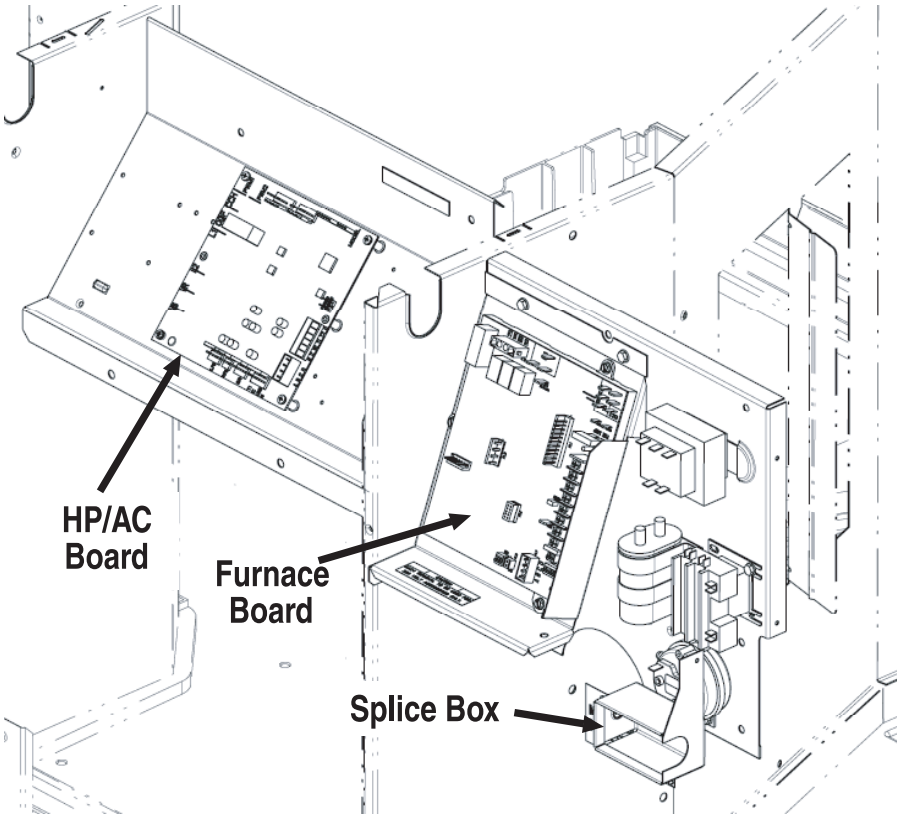

A06306

Fig. 13 - Control Plate

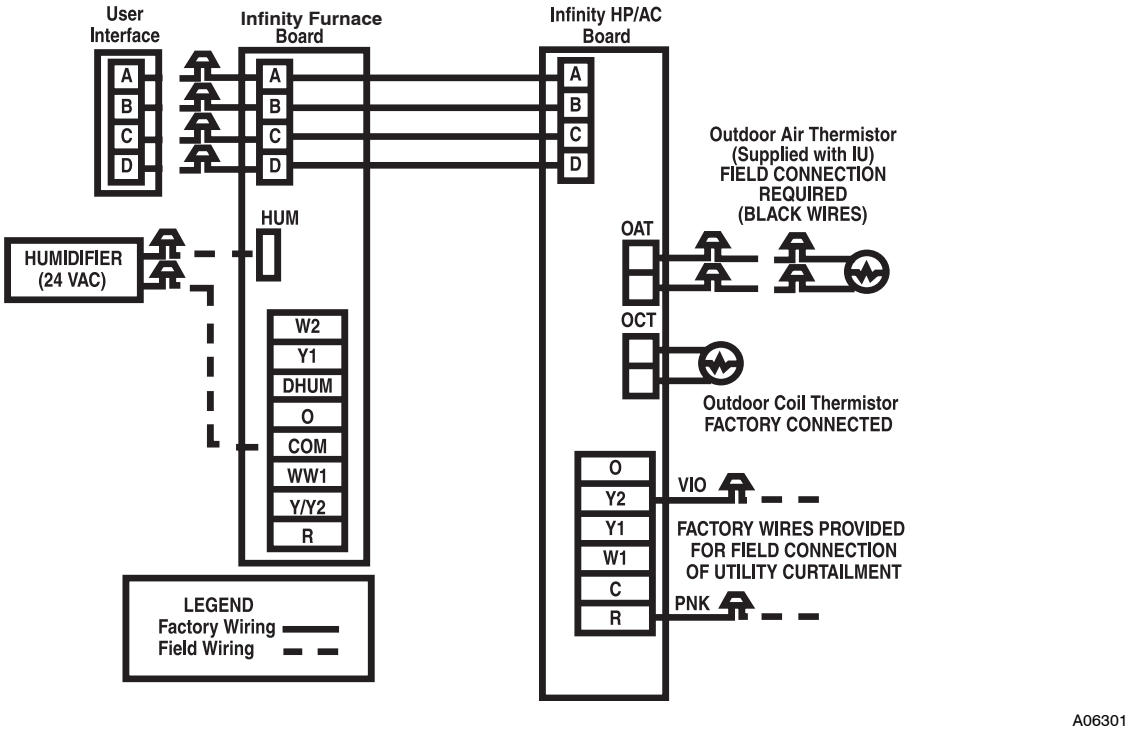

Fig. 14 - Control Voltage Wiring Connections

Table 3—Electrical Data - Unit 48XT

UNIT SIZE	V-PH-HZ	VOLTAGE RANGE		COMPRESSOR		OUTDOOR FAN MOTOR	INDOOR FAN MOTOR	POWER SUPPLY	
		Min	Max	RLA	LRA	FLA	FLA	MCA	MOCP
024	208/230–1–60	187	253	15.3	52.0	0.9	4.3	24.3/24.3	35/35
030	208/230–1–60	187	253	16.8	70.0	0.9	4.3	26.2/26.2	40/40
036	208/230–1–60	187	253	16.7	82.0	0.9	6.8	28.6/28.6	45/45
042	208/230–1–60	187	253	21.8	96.0	0.9	6.8	34.9/34.9	50/50
048	208/230–1–60	187	253	27.8	96.0	1.5	6.8	43.1/43.1	60/60
060	208/230–1–60	187	253	27.3	118.0	1.9	9.1	45.2/45.2	60/60

LEGEND

FLA — Full Load Amps
LRA — Locked Rotor Amps
MCA -- Minimum Circuit Amps
MOCP — Maximum Overcurrent Protection
RLA — Rated Load Amps

NOTES:

1. In compliance with NEC (National Electrical Code) requirements for multimotor and combination load equipment (refer to NEC Articles 430 and 440), the overcurrent protective device for the unit shall be Power Supply fuse. The CGA (Canadian Gas Association) units may be fuse or circuit breaker.
2. Minimum wire size is based on 60 C copper wire. If other than 60 C wire is used, or if length exceeds wire length in table, determine size from NEC.
3. Unbalanced 3-Phase Supply Voltage
   Never operate a motor where a phase imbalance in supply voltage is greater than 2%. Use the following formula to determine the percentage of voltage imbalance

   % Voltage imbalance

   $$= 100 \times \frac{\text{max voltage deviation from average voltage}}{\text{average voltage}}$$

* Heater capacity (kW) based on heater voltage of 208v & 240v. If power distibution voltage to unit varies from rated heater voltage, heater kW will vary accordingly.

EXAMPLE: Supply voltage is 230-3-60.

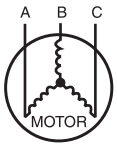

AB = 228 v
BC = 231 v
AC = 227 v

$$\text{Average Voltage} = \frac{228 + 231 + 227}{3} = \frac{686}{3} = 229$$

Determine maximum deviation from average voltage.
(AB) 229 - 228 = 1 v
(BC) 231 - 229 = 2 v
(AC) 229 - 227 = 2 v

Maximum deviation is 2 v.

Determine percent of voltage imbalance

$$\% \text{ Voltage Imbalance} = 100 \times \frac{2}{229} = 0.8\%$$

This amount of phase imbalance is satisfactory as it is below the maximum allowable 2%.

IMPORTANT: If the supply voltage phase imbalance is more than 2%, contact your local electric utility company immediately.

PRE-START-UP

⚠ WARNING

FIRE, EXPLOSION, ELECTRICAL SHOCK HAZARD

Failure to follow this warning could result in personal injury or death and/or property damage.

1. Follow recognized safety practices and wear protective goggles when checking or servicing refrigerant system.
2. Do not operate compressor or provide any electric power to unit unless compressor terminal cover is in place and secured.
3. Do not remove compressor terminal cover until all electrical sources are disconnected and tagged.
4. Relieve and recover all refrigerant from system before touching or disturbing anything inside terminal box if refrigerant leak is suspected around compressor terminals.
5. Never attempt to repair soldered connection while refrigerant system is under pressure.
6. Do not use torch to remove any component. System contains oil and refrigerant under pressure.
7. To remove a component, wear protective goggles and proceed as follows:
   a. Shut off gas supply to unit.
   b. Shut off electrical power to unit and install lockout tag.
   c. Relieve and reclaim all refrigerant from system using both high- and low-pressure ports.
   d. Cut component connecting tubing with tubing cutter and remove component from unit.
   e. Carefully unsweat remaining tubing stubs when necessary. Oil can ignite when exposed to flame.

Use the Start-Up Checklist supplied at the end of this book and proceed as follows to inspect and prepare the unit for initial start-up:

1. Remove all access panels.
2. Read and follow instructions on all DANGER, WARNING, CAUTION, and INFORMATION labels attached to, or shipped with unit.
3. Make the following inspections:
   a. Inspect for shipping and handling damages, such as broken lines, loose parts, disconnected wires, etc.
   b. Inspect for oil at all refrigerant tubing connections and on unit base. Detecting oil generally indicates a refrigerant leak. Leak test all refrigerant tubing connections using electronic leak detector, or liquid-soap solution. If a refrigerant leak is detected, see following Check for Refrigerant Leaks section.
   c. Inspect all field- and factory-wiring connections. Be sure that connections are completed and tight.
   d. Ensure wires do not touch refrigerant tubing or sharp sheet metal edges.
   e. Inspect coil fins. If damaged during shipping and handling, carefully straighten fins with a fin comb.
4. Verify the following conditions:
   a. Make sure gas line is free of air. Before lighting the unit for the first time, perform the following with the gas valve in the OFF position:

NOTE: If the gas supply pipe was not purged before connecting the unit, it will be full of air. It is recommended that the ground joint union be loosened, and the supply line be allowed to purge until the odor of gas is detected. Never purge gas lines into a combustion chamber. Immediately upon detection of gas odor, retighten the union. Allow 5 minutes to elapse, then light unit.

   b. Make sure that condenser-fan blade is correctly positioned in fan orifice. Top 1/3 of condenser fan blade should be within fan orifice venturi.
   c. Ensure fan hub is positioned correctly with respect to motor housing (See Fig. 23).
   d. Make sure that air filter(s) is in place.
   e. Make sure that condensate drain trap is filled with water to ensure proper drainage.
   f. Make sure that all tools and miscellaneous loose parts have been removed.
5. Compressors are internally spring mounted. Do not loosen or remove compressor holddown bolts.
6. Each unit system has two Schrader-type ports, one low-side Schrader fitting located on the suction line, and one high-side Schrader fitting located on the compressor discharge line. Be sure that caps on the ports are tight.

START-UP

Step 1—Unit Start-Up and Troubleshooting

NOTE: Always check high- and low-voltage supply to the unit components. Check the integrity of the plug receptacle connections and unit wiring harness prior to assuming a component failure.

A. LED Description

LEDs built into Infinity control boards provide installer or service person information concerning operation and/or fault condition of the unit controls and ECM motor. This information is also available at the system UI in text with basic troubleshooting instructions. Careful use of information displayed will reduce the need for extensive manual troubleshooting.

Both the furnace and heat pump (HP)/air conditioner (AC) boards have an amber LED and a green LED. On the HP/AC board, these are located near the System Communications connector (ABCD) (lower right corner of the HP/AC board as installed in the unit). On the furnace board, these are located at the upper right side, adjacent to the fuse, above the terminal block. The amber LED is the System Status LED, labeled STATUS. The green LED, labeled COMM, is used as an indicator of system communications status (See Fig. 15 and 17).

Status Codes will be displayed on the STATUS LED using the following protocol:

1. The number of short flashes indicates first digit of code.
2. The number of long flashes indicates second digit of code.
3. A short flash is 0.25 seconds on. A long flash is 1 second on.
4. The time between flashes is 0.25 seconds.
5. The time between last short flash and first long flash is 1 second.
6. The LEDs will be off for 2.5 seconds before repeating code.
7. If multiple status codes are active concurrently, the highest priority status code is displayed.

B. Control Start-Up and System Communications Troubleshooting

On power up, green COMM LEDs will be turned off until successful system communications are established (this should happen within 10 seconds). Once communications with UI are successful, both COMM LEDs will be lit and held on. At the same time, amber STATUS LEDs will be lit and held continuously on until a request for operating mode is received. The STATUS LED will be on any time unit is in idle mode.

If, at any time, communications are not successful for a period exceeding 2 minutes, the Infinity control will only allow emergency heating or cooling operation using a common thermostat and the terminal strip connections on the two control boards (See

Non-Communicating Emergency Cooling/Heating Mode) and will display Status Code 16, System Communication Fault, on amber STATUS LED. No further troubleshooting information will be available at UI until communications are re-established.

If either COMM LED does not light within proper time period and status codes are not displayed;

1. Check system transformer high- and low-voltage to be sure the system is powered.
2. Check ABCD connection on both boards.
3. Check fuse on furnace board to be sure it is not blown. If fuse is open, check system wiring before replacing it to be sure a short does not cause a failure of replacement fuse.

If COMM LED does not light within proper time period and status code is displayed:

1. Check system wiring to be sure UI is powered and connections are made A to A, B to B, etc. and wiring is not shorted. Mis-wiring or shorting of the ABCD communications wiring will not allow successful communications.

NOTE: Shorting or mis-wiring low-voltage system wiring will not cause damage to unit control or UI but may cause low voltage fuse to open.

C. Indoor Fan Motor Troubleshooting

The indoor fan is driven by an ECM motor consisting of two parts: the control module and the motor winding section. Do not assume motor or module is defective if it will not start. Use the designed-in LED information aids and follow troubleshooting steps described below before replacing motor control module or entire motor. Motor control module is available as a replacement part.

VERIFY MOTOR WINDING SECTION

⚠ WARNING

ELECTRICAL SHOCK HAZARD

Failure to follow this warning could result in personal injury or death.

After disconnecting power from the ECM motor, wait at least 5 minutes before removing the control section. Internal capacitors require time to discharge.

Before proceeding to replace a motor control module:

1. Check motor winding section to be sure it is functional.
2. Remove motor control module section and unplug winding plug. Motor shaft should turn freely, resistance between any two motor leads should be similar and resistance between any motor lead and unpainted motor end should exceed 100,000 ohms.
3. Failing any of these tests, entire ECM motor must be replaced.
4. Passing all of the tests, motor control module alone can be replaced.

MOTOR TURNS SLOWLY

1. Low static pressure loading of blower while access panel is removed will cause blower to run slowly. Particularly at low airflow requests. This is normal, do not assume a fault exists.
2. Recheck airflow and system static pressure using UI service screens with access panel in place.

NOTE: Blower motor faults will not cause a lockout of blower operation. The fan coil control will attempt to run the blower motor as long as UI maintains a demand for airflow. The control will not operate electric heaters while a fault condition exists. The control communicates with the motor at least once every five seconds, even when the motor is idle. If, during operation, the control does not communicate with the motor for more than 25 seconds, the motor will shut itself down and wait for communications to be reestablished.

D. Furnace Control Troubleshooting

Furnace control faults indicated by flashing codes on the amber system STATUS LED can be resolved using troubleshooting information provided below. Codes are listed in order of their priority, highest to lowest. Though multiple faults can exist at any time, only the highest priority code will be displayed on STATUS LED. Clearing the indicated fault when multiple faults exist will cause the next highest priority Status Code to be flashed. All existing faults, as well as a fault history, can be viewed at UI.

STATUS CODE CONTINUOUS OFF
Check for 230 VAC at L1 and L2, and 24 VAC at SEC-1 and SEC-2.

STATUS CODE CONTINUOUS ON
Control has 24 VAC power.

STATUS CODE 11 - NO PREVIOUS CODE
Stored status codes are erased automatically after 72 hours.

STATUS CODE 12 - BLOWER ON AFTER POWER UP
(230 VAC or 24 VAC) Blower runs for 90 seconds if unit is powered up during a call for heat (R-W/W1 closed) or (R-W/W1 opens) during blower on-delay period.

STATUS CODE 13 - LIMIT CIRCUIT LOCKOUT
Lockout occurs if a limit or flame rollout switch is open longer than 3 minutes or 10 successive limit trips occurred during high heat. Control will auto reset after three hours. Refer to status code 33.

STATUS CODE 14 - IGNITION LOCKOUT
Control will auto reset after three hours. Refer to status code 34.

STATUS CODE 15 - BLOWER MOTOR LOCKOUT
Indicates the blower failed to reach 250 RPM or the blower failed to communicate within 30 seconds after being turned ON in two successive heating cycles. Control will auto reset after 3 hours. Refer to status code 41.

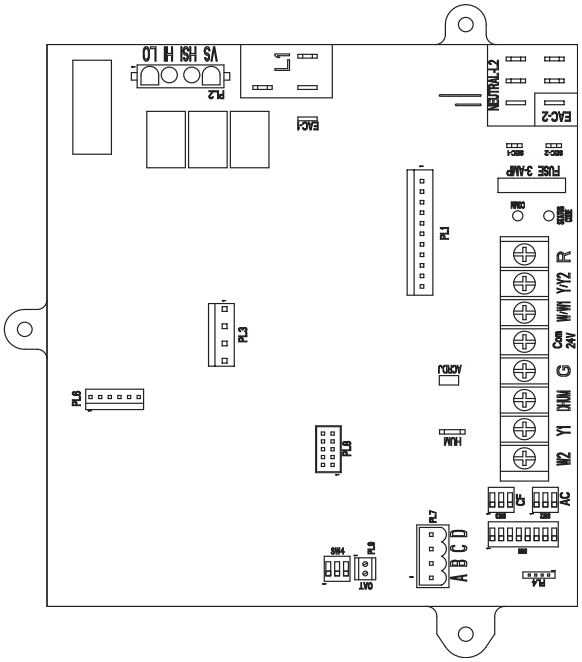

Fig. 15 - Detail of Furnace Board

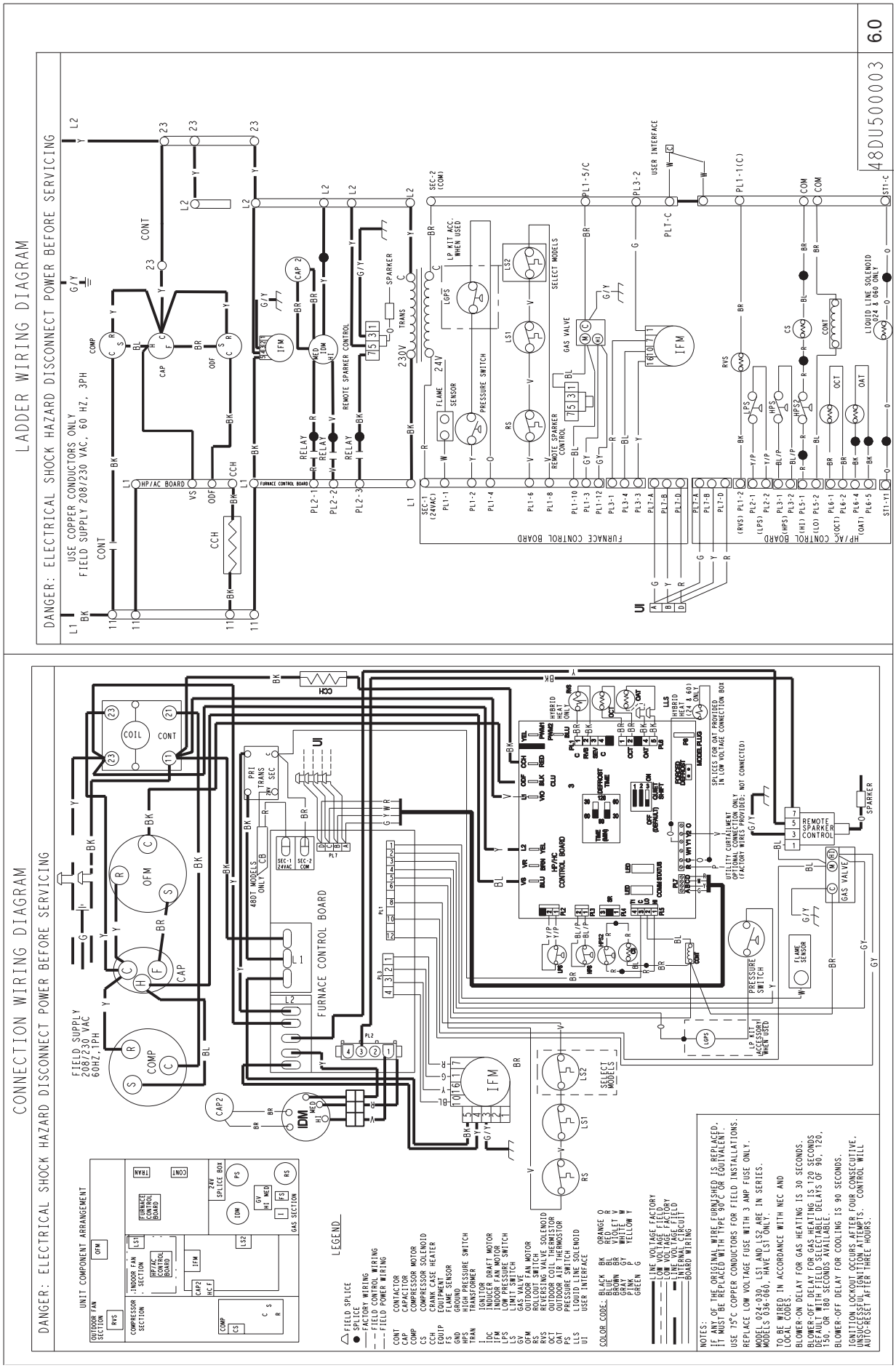

A06310

Fig. 16 - Wiring Schematic-48XT Single Phase

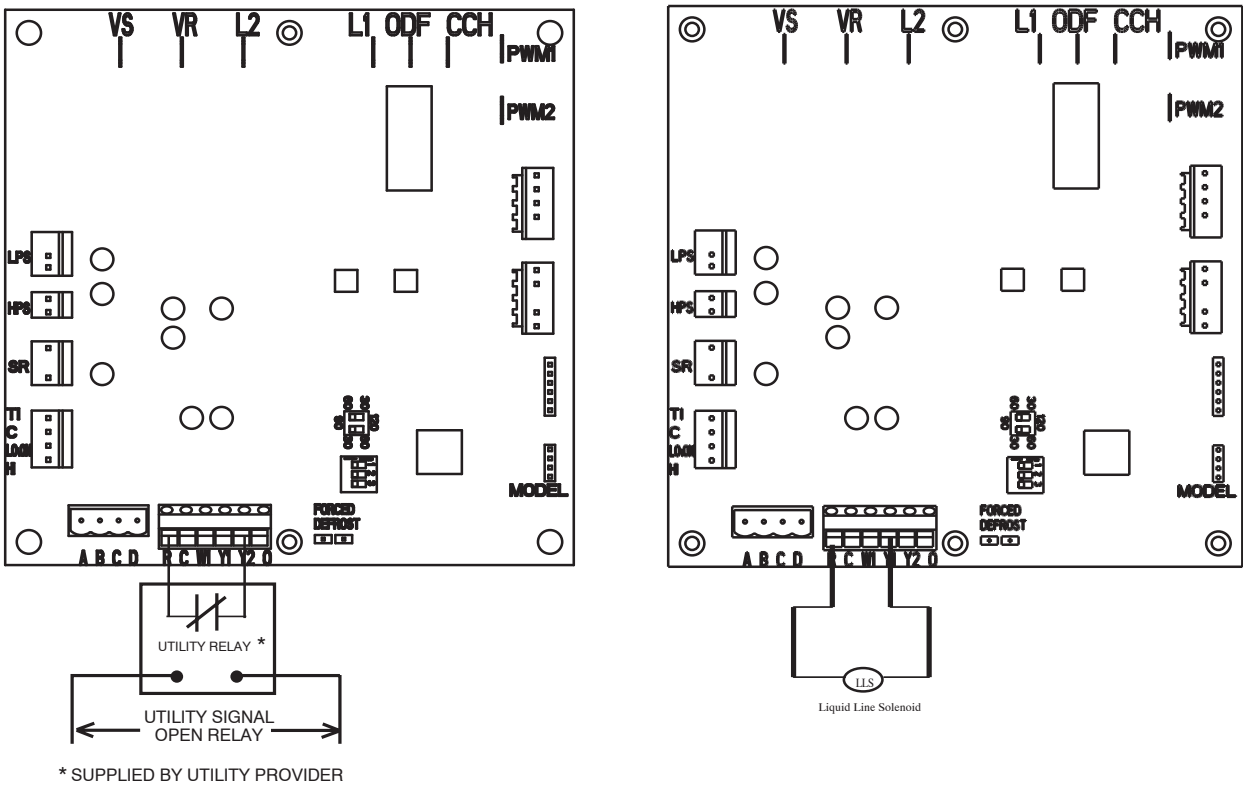

A05247

Fig. 17 - 2-Stage HP/AC Control Board

STATUS CODE 21 - GAS HEATING LOCKOUT
Control will NOT auto reset. Check for mis-wired gas valve or defective control (valve relay).

STATUS CODE 22 - ABNORMAL FLAME-PROVING SIGNAL
Flame is proved while gas valve is de-energized. Inducer will run until fault is cleared. Check for leaky gas valve or stuck-open gas valve.

STATUS CODE 23 - PRESSURE SWITCH DID NOT OPEN
Check for obstructed pressure tubing or pressure switch stuck closed.

STATUS CODE 24 - SECONDARY VOLTAGE FUSE IS OPEN
Check for short circuit in secondary voltage (24VAC) wiring.

STATUS CODE 25 - INVALID MODEL SELECTION OR SETUP ERROR
Indicates either the model plug is missing or incorrect. If code flashes 4 times on power-up, control is defaulting to model selection stored in memory. Check for proper model plug number and resistance values per wiring diagram.

STATUS CODE 31, 32 - PRESSURE SWITCH OR RELAY DID NOT CLOSE OR REOPENED
Control relay may be defective. If open longer than five minutes, inducer shuts off for 15 minutes before retry. If opens during blower on-delay period, blower will come on for the selected blower off-delay. Check for excessive wind, restricted vent, defective inducer motor, defective pressure switch, lower inducer voltage (230VAC), inadequate combustion air supply, disconnected or obstructed pressure tubing, or low inlet gas pressure (if LGPS used).

STATUS CODE 33 - LIMIT CIRCUIT FAULT
Indicates a limit or flame rollout switch is open. Blower will run for 4 minutes or until open switch remakes, whichever is longer. If open longer than 3 minutes, code changes to lockout 13. If open less than 3 minutes status code 33 continues to flash until blower shuts off. Check for loose blower wheel, restricted vent, excessive wind, dirty filter or restricted duct system, defective switch or connections, or inadequate combustion air supply (flame roll-out switch open).

STATUS CODE 34 - IGNITION PROVING FAILURE
Control will try three more times before lockout 14 occurs. If flame signal lost during blower on-delay period, blower will come on for the selected blower off-delay. Check for oxide buildup on flame sensor (clean with fine steel wool), proper flame sense microamps (.5 microamps D.C. min., 4.0-6.0 nominal), manual valve shut-off, low inlet gas pressure, control ground continuity, gas valve defective or turned off, flame sensor must not be grounded, inadequate flame carryover or rough ignition, or green/yellow wire must be connected to unit sheet metal.

STATUS CODE 41 - BLOWER MOTOR FAULT
Indicates the blower failed to reach 250 RPM or the blower failed to communicate within the prescribed time limits. Thirty seconds after being turned ON or ten seconds during steady-state operation.

STATUS CODE 45 - CONTROL CIRCUITRY LOCKOUT
Auto reset after one hour lockout due to gas valve relay stuck open, flame sense circuit failure, or software check error. Reset power to clear lockout. Replace control if status code repeats.

E. HP/AC Control Troubleshooting

See Table 5 for HP/AC control board status codes and troubleshooting information.

STATUS CODE 53, OUTDOOR AIR TEMPERATURE SENSOR FAULT - DETAILED DESCRIPTION

If an OAT sensor is found at power-up, input is constantly checked to be within a valid temperature range. If sensor is found to be open or shorted at any time after initial validation, Status Code 53 will be displayed at amber STATUS LED.

Check for faults in wiring connecting sensor to OAT terminals. Using an Ohm meter, check resistance of thermistor for a short or open condition.

If thermistor is shorted or open, replace it to return the system to normal operation. If fault is in the wiring connections, correcting the fault will clear the code and return the system to normal operation.

NOTE: If fault condition is an open thermistor or a wiring problem that appears to be an open thermistor and the power to the unit is

cycled off, the fault code will be cleared on the next power-up but the fault will remain and system operation will not be as expected. **This is because on power-up, the unit control cannot discern the difference between an open sensor or if a sensor is not installed.**

Step 2—Sequence of Operation

The 48XT Hybrid Heat unit is designed for installation with a communicating UI. This unit will not respond to commands provided by a common thermostat except under certain emergency situations described in Step 1—Start-Up and Troubleshooting.

The UI uses temperature, humidity and other data supplied from indoor and outdoor system components to control heating or cooling system for optimum comfort. The unit will be commanded by UI to supply airflow. The unit will operate the indoor blower at requested airflow for most modes.

INDOOR AIRFLOW ADJUSTMENTS

The nominal requested airflow for heat pump operations will be 350 cfm per ton of nominal cooling capacity as defined by unit size. Actual airflow request will be adjusted from nominal using indoor and outdoor temperature and indoor humidity data to optimize the system operation for occupant comfort and system efficiency. Refer to UI literature for further system control details.

⚠ CAUTION

UNIT OPERATION HAZARD

Failure to follow this caution may result in unit damage.

For cooling operation, the recommended airflow is 350 to 450 cfm for each 12,000 Btuh of rated cooling capacity. For heating operation, the airflow must produce a temperature rise that falls within the range stamped on the unit rating plate.

For gas heat operations, Table 4 shows the temperature rise in each gas heating mode. Refer to these tables to determine the desired heating airflow for the system being installed.

NOTE: Be sure that all supply-and return-air grilles are open, free from obstructions, and adjusted properly.Airflow can be changed using the User Interface. See UI installation instructions for more detail.

NOTE: Once the compressor has started and then has stopped, it should not be started again until 4 minutes have elapsed. The cooling cycle remains "on" until the room temperature drops to point that is slightly below the cooling control setting of the UI.

HYBRID HEAT SEQUENCE OF OPERATION

The Hybrid Heat sequence of operation, from satisfied to full heating, is as follows:

The system will attempt to satisfy the call for heat with the first stage heat pump. There is a ten-minute staging timer before switching to the second stage heat pump.

Second stage heat pump will run until call for heat is satisfied or for fifteen minutes. If after 15 minutes the call for heat still exists, the unit will stage to first stage gas.

For first stage gas the heat pump will be off unless the unit is in defrost. There is a ten-minute staging timer on first stage gas. If call for heat still exists after 10 minutes, the system will stage to second stage gas and run until the call for heat is satisfied.

NOTE: Heat stages are not shortened due to a 5 degree or higher demand. All stages are utilized for the full allotted time described above. If the UI determines it is making sufficient progress toward set point, it may not stage up after the staging timer has elapsed. Pressing the FAN and TEMPERATURE UP buttons simultaneously defeats cycle timers. See UI intallation instructions for more detail.

HEAT PUMP SEQUENCE OF OPERATION

COOLING AND HEATING OPERATION

With a call for first stage cooling, the outdoor fan, reversing valve, and low stage compressor are energized. If low-stage cannot satisfy cooling demand, high-stage cooling is energized by the UI. After second stage is satisfied, the unit returns to low-stage operation until first stage is satisfied or until second stage is required again. When both first stage and second stage cooling are satisfied, the compressor will shut off. The reversing valve will remain energized until the control board power is removed or a call for heating in initiated. With a call for heating, the outdoor fan and compressor are energized. The compressor will operate in high or low stage operation, as needed to meet the heating demand. When the heating demand is satisfied, the compressor and fan will shut off. The reversing valve is de-energized in the heating mode.

NOTE: When two-stage unit is operating at low-stage, system vapor (suction) pressure will be higher than a standard single-stage system or high-stage operation.

NOTE: Outdoor fan motor will continue to operate for one minute after compressor shuts off, when outdoor ambient is greater than or equal to 100°F.

UTILITY INTERFACE WITH INFINITY CONTROL

The utility curtailment relay should be connected to factory supplied pigtails (PINK, connected to R, VIOLET connected to Y2 on the control board) located in the low voltage splice box (See Fig. 13, 14 and 16). This input allows a power utility device to interrupt compressor operation during peak load periods. When the utility sends a signal to shut the system down, the UI will display, "Curtailment Active".

Table 4—Air Delivery and Temperature Rise at Rated Heating Input

Unit	Rated Heating Input (Btu/hr)		Heating Rise Range (°F)		Heating Rise (Either Stage, °F)			
					"Efficiency"		"Comfort"	
	High Stage	Low Stage	High Stage	Low Stage	High Stage	Low Stage	High Stage	Low Stage
48XT(-,N)024040 48XT(-,N)030040	40,000	26,000	20 - 50	15-45	35	30	40	35
48XT(-,N)030060 48XT(-,N)036060 48XT(-,N)042060	60,000	39,000	25 - 55	25 - 55	40		50	
48XT(-,N)036090 48XT(-,N)042090 48XT(-,N)048090 48XT(-,N)060090	90,000	58,500	35 - 65	35 - 65	50		55	
48XT(-,N)048115 48XT(-,N)060115	115,000	75,000	30 - 60	30 - 60	45		50	
48XT(-,N)048130 48XT(-,N)060130	130,000	84,500	35 - 65	35 - 65	50		55	

Airflow delivery values for external static pressure values of up to 1" wc.

Table 5—HEAT PUMP/AIR CONDITIONER BOARD STATUS CODES

OPERATION	FAULT	AMBER LED FLASH CODE	POSSIBLE CAUSE AND ACTION
Standby – no call for unit operation	None	On solid, no flash	Normal operation.
Emergency Mode	Standard Thermostat Control	Rapid, continuous flashing	Unit being controlled by standard thermostat inputs instead of Infinity Control. Only high stage operation is available. This operating mode should be used in emergency situations only.
Low Stage Cool/Heat Operation	None	1, pause	Normal operation.
High Stage Cool/Heat Operation	None	2, pause	Normal operation.
	System Communications Failure	16	Communication with UI lost. Check wiring to UI, indoor and outdoor units.
	Invalid Model Plug	25	Control does not detect a model plug or detects an invalid model plug. Unit will not operate without correct model plug.
	High–Pressure Switch Open	31	High–pressure switch trip. Check refrigerant charge, outdoor fan operation and coils for airflow restrictions.
	Low–Pressure Switch Open	32	Low–pressure switch trip. Check refrigerant charge and indoor air flow.
	Control Fault	45	Outdoor unit control board has failed. Control board needs to be replaced.
	Brown Out (230 v)	46	Line voltage < 187v for at least 4 seconds. Compressor and fan operation not allowed until voltage≥190v. Verify line voltage.
	No 230v at Unit	47	There is no 230v at the contactor when indoor unit is powered and cooling/heating demand exists. Verify the disconnect is closed and 230v wiring is connected to the unit.
	Outdoor Air Temp Sensor Fault	53	Outdoor air sensor not reading or out of range. Ohm out sensor and check wiring.
	Outdoor Coil Sensor Fault	55	Coil sensor not reading or out of range. Ohm out sensor and check wiring.
	Thermistors Out of Range	56	Improper relationship between coil sensor and outdoor air sensor. Ohm out sensors and check wiring.
	Low Stage Thermal Cutout	71	Compressor voltage sensed, then disappears while cooling or heating demand exists. Possible causes are internal compressor overload trip or start relay not releasing (if installed).
	High Stage Thermal Cutout	72	Compressor voltage sensed, then disappears while cooling or heating demand exists. Possible causes are internal compressor overload trip or start relay not releasing (if installed).
	Contactor Shorted	73	Compressor voltage sensed when no demand for compressor operation exists. Contactor may be stuck closed or there is a wiring error.
	No 230V at Compressor	74	Compressor voltage not sensed when compressor should be starting. Contactor may be stuck open or there is a wiring error.
	Low Stage Thermal Lockout	81	Thermal cutout occurs in three consecutive low/ high stage cycles. Low stage locked out for 4 hours or until 24v power recycled.
	High Stage Thermal Lockout	82	Thermal cutout occurs in three consecutive high/low stage cycles. High stage locked out for 4 hours or until 24v power recycled.
	Low–Pressure Lockout	83	Low–pressure switch trip has occurred during 3 consecutive cycles. Unit operation locked out for 4 hours or until 24v power recycled.
	High–Pressure Lockout	84	High–pressure switch trip has occurred during 3 consecutive cycles. Unit operation locked out for 4 hours or until 24v power recycled.

COMPRESSOR OPERATION

When the compressor is operating in low stage, the modulating ring is deactivated, allowing two internal bypass ports to close off 33% of the scroll compression area so the system operates at part load capacity. The 24-volt solenoid coil is de-energized in low-stage operation.

When the compressor is operating at high stage, the modulating ring is activated, sealing the bypass ports, which allows the compressor to operate at full load capacity. The 24-volt solenoid coil is energized in high stage operation.

CRANKCASE HEATER OPERATION (IF APPLICABLE)

The crankcase heater is energized during off cycle below 65°F outdoor air temperature.

OUTDOOR FAN MOTOR OPERATION

The outdoor unit control energizes the outdoor fan any time the compressor is operating, except for defrost. The outdoor fan remains energized if a pressure switch or compressor overload should open. Outdoor fan motor will continue to operate for one minute after the compressor shuts off when the outdoor ambient is greater than or equal to 100°F.

TIME DELAYS-HEAT PUMP OPERATIONS

The unit time delays include:

- Five minute time delay to start heat pump cooling or heating operation when there is a call from the thermostat or user interface. To bypass this feature, momentarily short and release Forced Defrost pins.
- Five minute compressor recycle delay on return from a brown-out condition.
- Two minute time delay to return to standby operation from last valid communication (with Infinity only).
- One minute time delay of outdoor fan at termination of cooling mode when outdoor ambient is greater than or equal to 100°F.
- Fifteen second delay at termination of defrost before the auxiliary heat (W1) is de-energized.
- Twenty second delay at termination of defrost before the outdoor fan is energized.
- Thirty second compressor delay when quiet shift enabled.
- There is no time delay between heat pump staging from low to high and from high to low capacity; the compressor will change from low to high and from high to low capacity as demand dictates.

INFINITY CONTROLLED LOW AMBIENT COOLING

NOTE:When this unit is operating below 55°F outdoor temperature, provisions must be made for low ambient operation. This unit is capable of low ambient cooling down to 0°F ONLY when using the Infinity control. A low ambient kit is not required, and the outdoor fan motor does not need to be replaced for Infinity controlled low ambient operation. **Low ambient cooling must be enabled in the UI set-up.** Fan may not begin to cycle until about 40°F OAT. Fan will cycle based on coil and outdoor air temperature. Infinity controlled low ambient mode operates as follows:

- In high stage, fan is off when outdoor coil temp is <outdoor air temperature +3°F or outdoor fan has been ON for 30 minutes. (Fan is turned off to allow refrigerant system to stabilize.)
- In low stage, fan is off when outdoor coil temp is <outdoor air temperature +1°F or outdoor fan has been ON for 30 minutes. (Fan is turned off to allow refrigerant system to stabilize.)
- In high stage and low stage, fan is on when outdoor coil temp > outdoor air temperature +25°F or outdoor coil temp > 80°F or if outdoor fan has been OFF for 30 minutes. (Fan is turned on to allow refrigerant system to stabilize.)
- Low-pressure switch is ignored for first 3 minutes during low ambient start up. After 3 minutes, if LPS trips, then outdoor fan motor is turned off for 10 minutes with the compressor running. If LPS closes within 10 minutes then cooling continues with the outdoor fan cycling per the coil temperature routine listed above for the remainder of the cooling cycle. If the LPS does not close within 10 minutes, then the normal LPS trip response (shut down cooling operation and generate LPS trip error) will occur.

DEFROST

This control offers 5 possible defrost interval times: 30, 60, 90, 120 minutes, or AUTO.

The defrost interval times: 30, 60, 90, and 120 minutes or AUTO are selected by the Infinity Control User Interface (the dip switches are not used.)

AUTO defrost adjusts the defrost interval time based on the last defrost time as follows:

- When defrost time <3 minutes, the next defrost interval=120 minutes.
- When defrost time 3-5 minutes, the next defrost interval=90 minutes.
- When defrost time 5-7 minutes, the next defrost interval=60 minutes.
- When defrost time >7 minutes, the next defrost interval=30 minutes.

The HP/AC control board accumulates compressor run time. As the accumulated run time approaches the selected defrost interval time, the control board monitors the coil temperature sensor for a defrost demand. If a defrost demand exists, a defrost cycle will be initiated at the end of the selected time interval. A defrost demand exists when the coil temperature is at or below 32°F for 4 minutes during the interval.

The defrost cycle is terminated when the coil temperature reaches 65°F or 10 minutes has passed.

If the coil temperature does not reach 32°F within the interval, the interval timer will be reset and start over.

- Upon initial power up the first defrost interval is defaulted to 30 minutes. Remaining intervals are at selected times.
- Defrost is only allowed to occur below 50°F outdoor ambient temperature.

DEFROST HOLD

Defrost hold is not needed in a communicating system because the UI will complete the defrost cycle before shutting down the system.

FORCED DEFROST

Forced defrost is initiated with the UI.

During a Forced Defrost:

- If coil temperature is at defrost temperature of 32°F, and outdoor air temperature is below 50°F, a full defrost sequence will occur.
- If coil temperature or outdoor air temperature do not meet the above requirements, an abbreviated 30 second defrost will occur.

QUIET SHIFT

Quiet Shift is a field-selectable defrost mode which may eliminate occasional noise that could be heard at the start of the defrost cycle and restarting of the heating cycle. This feature must be enabled at the UI. When activated, the following sequence of operation will occur. Reversing valve will energize and compressor will turn off for 30 seconds, then turn back on to complete defrost. At the end of the defrost cycle, the reversing valve de-energizes, compressor will turn off for another 30 seconds, and the fan will turn off for 40 seconds, before starting in the heating mode.

DEHUMIDIFICATION MODE

This Infinity system can be used to dehumidify the living space. See User Interface Installation Instructions for more details.

SEQUENCE OF OPERATION-GAS HEAT

NOTE: Infinity control must be grounded for proper operation or control will lock out.

NOTE: If a power interruption occurs during a call for heat, the control will start a 90-second blower-only ON period two seconds after power is restored, if the UI is still calling for gas heating. The amber LED light will flash code 12 during the 90-second period, after which the LED will be ON continuously, as long as no faults are detected. After the 90-second period, the unit will respond to the UI normally.

GAS HEAT MODE AND ADJUSTMENTS

When the UI calls for gas heat, the Infinity furnace board performs a self-check, verifies the pressure switch is open, and starts the inducer on high speed.

1. Inducer Pre-purge Period: When the inducer motor comes up on high speed, the pressure switch closes, and the Infinity ignition control on the furnace board begins a 15 second pre-purge period. If the pressure switch fails to remain closed, the inducer will remain running. After the pressure switch re-closes, the Infinity ignition control will begin a 15 second pre-purge period.
2. Trial-For-Ignition Sequence: The spark igniter will spark for 3 seconds. The main gas valve relay contact closes to energize the gas valve on low stage. After 5 seconds, the igniter is de-energized and a 2-second flame-proving period begins. NOTE: The unit always lights on high speed inducer and low stage gas valve operation.
3. Flame-Proving: When the burner flame is proved at the flame-proving sensor, the furnace control determines what heating stage to run based on feedback from the UI. If the UI is asking for low stage gas heat, the ignition control will change the inducer speed to low speed and keep the gas valve energized on low stage. If the UI is asking for high stage gas heat, the ignition control will maintain running the inducer on high speed and energize the gas valve's high stage relay to increase gas flow.

If the burner flame is not proved within 2 seconds, the control will close the gas valve and repeat the ignition sequence up to 3 more Trials-For-Ignition before going to Ignition-Lockout. Lockout will reset automatically after 3 hours, by momentarily interrupting 230 VAC power, or by interrupting 24 VAC power at SEC1 or SEC2 to the furnace board.

If flame is proved when there should be no flame present, control will lock out of Gas-Heating mode and operate the inducer motor until flame is no longer proved.

4. Blower-On Delay: If the burner flame is proven, approximately 37 seconds after the gas valve is opened the Indoor Blower is turned on to the appropriate speed for the gas heating stage.

Simultaneously, the humidifier terminal HUM and electronic air cleaner terminal EAC-1 are energized throughout the heating cycle.

NOTE: EAC-2 terminal is common with L2 and will have 115VAC-to-ground when unit is powered.

5. Blower-Off Delay: When the call for gas heat is satisfied, the gas valve is de-energized, stopping the flow of gas to the burners, and de-energizing the HUM terminal. The inducer motor will remain on for a 4-second post-purge period. The indoor blower and air cleaner terminal EAC-1 will remain energized for 90, 120, 150, or 180 seconds (depending on selection of blower-off delay selected in the UI). The factory-set default is 120-second blower-OFF delay.

CHECK GAS INPUT (NATURAL GAS)

⚠ CAUTION

UNIT DAMAGE HAZARD

Failure to follow this caution may result in component damage.

Do not redrill an orifice. Improper drilling (burrs, out-of-round holes, etc.) can cause excessive burner noise and misdirection of burner flame. If orifice hole appears damaged or it is suspected to have been redrilled, check orifice hole with a numbered drill bit of correct size.

⚠ WARNING

FIRE HAZARD

Failure to follow this warning could result in personal injury, death and/or property damage.

DO NOT bottom out gas valve regulator adjusting screws. This can result in unregulated manifold pressure and result in excess overfire and heat exchanger failures.

⚠ WARNING

CARBON MONOXIDE POISONING HAZARD

Failure to follow this warning could result in personal injury, death and/or property damage.

If the manifold pressure and/or gas rate is not properly adjusted on HI and LO stages, excess carbon monoxide can be produced.

⚠ WARNING

FIRE AND UNIT DAMAGE HAZARD

Failure to follow this warning could result in personal injury or death and/or property damage.

Unsafe operation of the unit may result if manifold pressure is outside of the ranges listed in Table 7.

Gas input rates on rating plate are for installations at altitudes up to 2000 ft. Input rate must be within ± 2% of rating plate input.

1. Determine the correct gas input rate.
   a. The rated gas inputs shown in Table 4 are for altitudes from sea level to 2000ft above sea level. These inputs are based on natural gas with a heating value of 1050 Btu/ft3 at .65 specific gravity.

IN THE U.S.A.:

The input rating for altitudes above 2,000 ft. must be reduced by 4 percent for each 1,000 ft. above sea level.

For installations below 2,000 ft., refer to the unit rating plate.

For installations above 2,000 ft., multiply the input by on the rating plate by the derate multiplier in Table 6 for the correct input rate.

Table 6—Altitude Derate Multiplier for U.S.A.

Altitude (Ft)	Percent of Derate	Derate Multiplier Factor*
0-2000	0	1.00
2001-3000	8-12	0.90
3001-4000	12-16	0.86
4001-5000	16-20	0.82
5001-6000	20-24	0.78
6001-7000	24-28	0.74
7001-8000	28-32	0.70
8001-9000	32-36	0.66
9001-10,000	36-40	0.62

*Derate multiplier factors are based on midpoint altitude for altitude range.

IN CANADA:

The input rating for altitudes from 2,000 to 4,500 ft above sea level must be derated 10 percent by an authorized Gas Conversion Station or Dealer.

EXAMPLE:
90,000 Bhuh Input Furnace Installed at 4300 Ft.

Furnace Input Rate at Sea Level	X	Derate Multiplier Factor	=	Furnace Input Rate at Installation Altitude
90,000	X	0.90	=	81,000

b. When the gas supply being used has a different heating value or specific gravity, refer to national and local codes, or contact your distributor to determine the required orifice size.

2. Adjust manifold pressure to obtain low stage input rate (See Fig. 18).
   a. Turn off gas supply to unit.
   b. Remove pipe plug on manifold (See Fig. 19) and connect manometer. Turn on gas supply to unit.
   c. Turn gas valve switch to ON.
   d. Set unit to run for 20 minutes in low-stage gas heat operation using the "INSTALLER CHECKOUT" menu on the UI.
   e. Remove regulator adjustment cap from low stage gas valve pressure regulator (See Fig. 18) and turn low-stage adjusting screw (3/16 or smaller flat-tipped screwdriver) counterclockwise (out) to decrease rate and clockwise (in) to increase input rate.

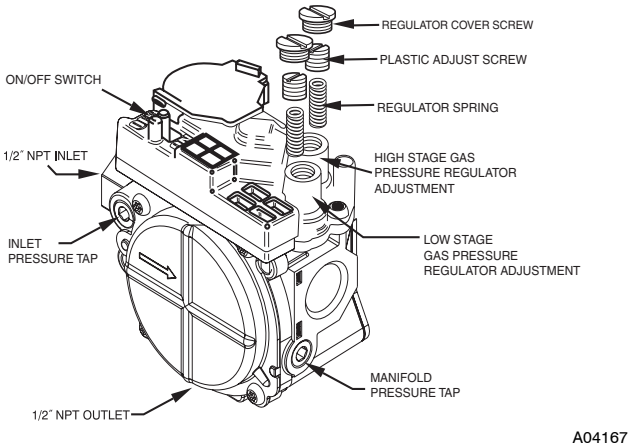

Fig. 18 - Redundant Automatic Gas Control Valve

NOTE: DO NOT set low stage manifold pressure less than 1.4 in wc or more than 2.0 in wc for natural gas. If manifold pressure is outside this range, change main burner orifices.

   f. Re-install low stage regulator adjustment cap.
   g. Leave manometer connected.

NOTE: If orifice hole appears damaged or it is suspected to have been re-drilled, check orifice hole with a numbered drill bit of the correct size. Never re-drill an orifice. A burr-free and squarely aligned orifice hole is essential for proper flame characteristics.

3. Verify natural gas low stage input rate.
   a. Turn off all other gas appliances and pilots served by the gas meter.
   b. If unit is not running, set unit to run for 20 minutes in low-stage gas heat operation using the "INSTALLER CHECKOUT" menu on the User Interface.
   c. Record number of seconds for gas meter to complete one revolution.
   d. Divide number of seconds in step c. into 3600 (number of seconds in 1 hour).
   e. Multiply result of step d. by the number of cubic feet shown for one revolution of test dial to obtain cubic feet of gas flow per hour.
   f. Multiply result of step f. by Btu heating value of the gas to obtain total measured input shown in Table 4. (Consult the local gas supplier if the heating value of gas is not known).

EXAMPLE: Assume a 90,000 high stage input unit is being installed. Assume that the size of the dial is 2 cubic ft., one revolution takes 129 sec., and the heating value of the gas is 1050 Btu/ft3. Proceed as follows:

   a. 129 sec. to complete one revolution
   b. 3600/129 = 27.9
   c. 27.9 x 2 = 55.8 ft3 of gas flow/hr.
   d. 55.8 x 1050 = 58,590 Btuh input.

In this example, the nominal input rate for low stage is 58,500 Btu/hr, so the low stage manifold pressure is correctly set.

If the measured low stage rate is too low, increase the manifold pressure to increase rate. If the measured low stage rate is too high, decrease the manifold pressure to decrease rate.

NOTE: Double-check that UI is running on low stage gas heat while clocking the low stage firing rate.

4. Verify proper low stage gas heat temperature rise.
   a. Furnace must operate within rise range listed on rating plate.
   b. Select "COMFORT" or "EFFICIENCY" mode on User Interface. "COMFORT" mode will provide a warmer supply air temperature, while "EFFICIENCY" will provide lower gas consumption.
   c. Make sure access panel is re-installed on the unit.
   d. Measure supply and return temperatures as close to the unit as possible. Subtract the return temperature from the supply temperature to determine rise. Rise should fall within the range specified on the rating plate.
5. Adjust manifold pressure to obtain high stage input rate (See Fig. 18).
   a. Set unit to run for 20 minutes in high-stage gas heat operation using the "INSTALLER CHECKOUT" menu on the UI.
   b. Remove regulator adjustment cap from high stage gas valve pressure regulator (See Fig. 18) and turn high-stage adjusting screw (3/16 or smaller flat-tipped screwdriver) counterclockwise (out) to decrease rate and clockwise (in) to increase input rate.

NOTE: DO NOT set high stage manifold pressure less than 3.2 in wc or more than 3.8 in wc for natural gas. If manifold pressure is outside this range, change main burner orifices.

   c. Re-install high stage regulator adjustment cap.
   d. Leave manometer connected.
6. Verify natural gas high stage input rate.
   a. Turn off all other gas appliances and pilots served by the gas meter.
   b. If unit is not running, set unit to run for 20 minutes in high stage gas heat operation using the "INSTALLER CHECKOUT" menu on the User Interface.
   c. Record number of seconds for gas meter to complete one revolution.
   d. Divide number of seconds in step c. into 3600 (number of seconds in 1 hour).
   e. Multiply result of step d. by the number of cubic feet shown for one revolution of test dial to obtain cubic feet of gas flow per hour.

f. Multiply result of step f. by Btu heating value of the gas to obtain total measured input shown in Table 4. (Consult the local gas supplier if the heating value of gas is not known).

EXAMPLE: Assume a 90,000 high stage input unit is being installed. Assume that the size of the dial is 2 cubic ft., one revolution takes 84 sec., and the heating value of the gas is 1050 Btu/ft3. Proceed as follows:

a. 84 sec. to complete one revolution

b. 3600/84 = 42.9

c. 42.9 x 2 = 85.8 ft3 of gas flow/hr.

d. 85.8 x 1050 = 90,090 Btuh input.

In this example, the nominal input rate for high stage is 90,000 Btu/hr, so the high stage manifold pressure is correctly set.

If the measured high stage rate is too low, increase the manifold pressure to increase rate. If the measured high stage rate is too high, decrease the manifold pressure to decrease rate.

NOTE:Double-check that User Interface is running on high stage gas heat while clocking the low stage firing rate.

7. Verify proper high stage gas heat temperature rise.

   a. Furnace must operate within rise range listed on rating plate.

   b. Make sure access panel is re-installed on the unit.

   c. Measure supply and return temperatures as close to the unit as possible. Subtract the return temperature from the supply temperature to determine rise. Rise should fall within the range specified on the rating plate.

NOTE: If the temperature rise is outside the rating plate range, first check:

a. Gas input for low and high stage gas heat operation.

b. Derate for altitude, if applicable.

c. Return and supply ducts for excessive restrictions causing static pressures in excess of .5 in. wc.

d. Make sure model plug is installed.

8. Final Check

   a. Turn off gas to unit

   b. Remove manometer from pressure tap.

   c. Replace pipe plug on manifold (See Fig. 19).

   d. Turn on gas to unit.

   e. Check for leaks.

CHECK GAS INPUT (PROPANE GAS)

Refer to propane kit installation instructions for properly checking gas input.

NOTE: For installations below 2,000 ft., refer to the unit rating plate for proper propane conversion kit. For installations above 2,000 ft, contact your distributor for proper propane conversion kit.

CHECK BURNER FLAME

With burner access panel removed, observe the unit heating operation. Watch the burner flames to see if they are light blue and soft in appearance, and that the flames are approximately the same for each burner. Propane will have blue flame (See Fig. 20). Refer to the Maintenance section for information on burner removal.

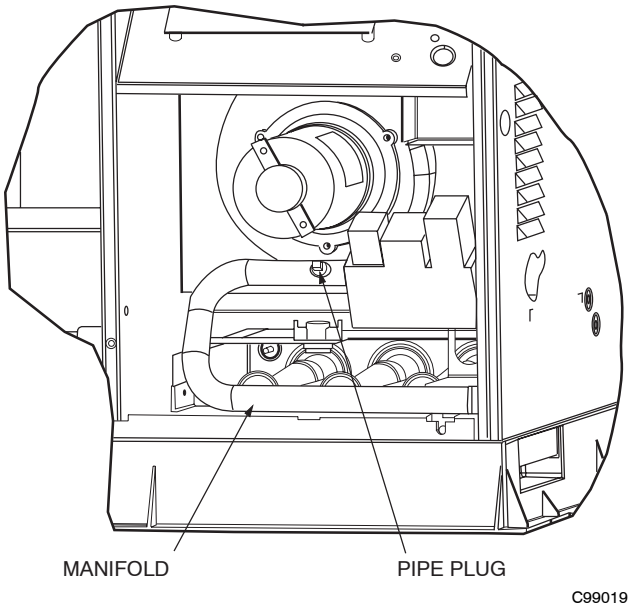

Fig. 19 - Burner Assembly

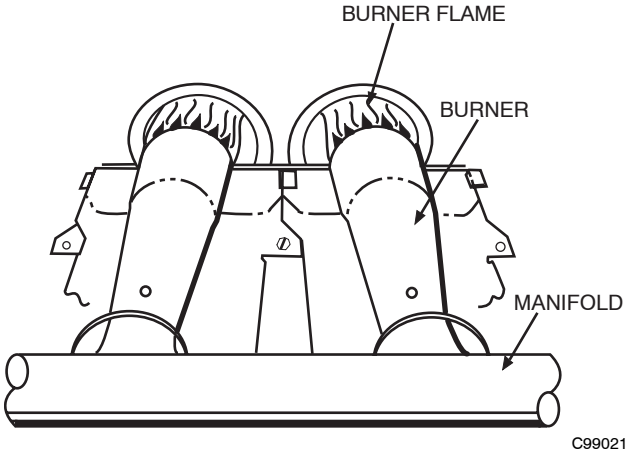

Fig. 20 - Monoport Burner

LIMIT SWITCHES

Normally closed limit switch (LS) completes the control circuit. Should the leaving-air temperature rise above the maximum allowable temperature, the limit switch opens and the control circuit "breaks." Any interruption in the control circuit instantly closes the gas valve and stops gas flow to the burners and pilot. The blower motor continues to run until LS resets. The furnace board STATUS LED will display STATUS CODE 33.

When the air temperature at the limit switch drops to the low-temperature setting of the limit switch, the switch closes and completes the control circuit. The direct-spark ignition system cycles and the unit returns to normal heating operation.

ROLLOUT SWITCH

The function of the rollout switch is to close the main gas valve in the event of flame rollout. The switch is located above the main burners. When the temperature at the rollout switch reaches the maximum allowable temperature, the control circuit trips, closing the gas valve and stopping gas flow to the burners. The indoor fan motor (IFM) continues to run until switch is reset. The furnace board STATUS LED will display STATUS CODE 33.

Table 7—Heating Inputs

HEATING INPUT (BTU/HR)*		NUMBER OF ORIFICES	GAS SUPPLY PRESSURE (IN. WG)		MANIFOLD PRESSURE (IN. WG)	
			Natural		Natural	
High Stage	Low Stage		Min	Max	High Stage	Low Stage
40,000	26,000	2	4.0	13.0	3.2~ 3.8	1.4 ~ 2.0
60,000	39,000	3	4.0	13.0	3.2~ 3.8	1.4 ~ 2.0
90,000	58,500	3	4.0	13.0	3.2~ 3.8	1.4 ~ 2.0
115,000	75,000	3	4.0	13.0	3.2~ 3.8	1.4 ~ 2.0
130,000	84,500	3	4.0	13.0	3.2~ 3.8	1.4 ~ 2.0

*Cubit ft of natural gas per hour for gas pressures of .5 psig (14 in. wc) or less and a pressure drop of .5 in. wc (based on a .60 specific gravity gas). Ref: Table 12.2 ANSI Z223-2002/NFPA 54-2002.

CONTINUOUS FAN MODE

When continuous fan operation is requested by the User Interface indoor fan motor will operate at continuous blower airflow. Continuous fan operation is programmable. See the User Interface Owner's Manual for detailed instructions. Terminal EAC-1 is energized as long as the indoor fan motor is energized.

During a call for gas heat, the Infinity control will transition the indoor fan motor to continuous blower airflow or gas heat airflow, whichever is lowest. The indoor fan motor will remain ON until the burners ignite, then shut OFF and remain OFF for the blower-ON delay allowing the heat exchangers to heat up more quickly, then restarts at the end of the blower-ON delay period.

The indoor fan motor will revert to continuous-blower airflow after the gas heating cycle is completed.

When the UI "calls for cooling", the indoor fan motor will switch to operate at cooling airflow. When the call for cooling is satisfied, the indoor fan motor will operate an additional 90 seconds at cooling airflow before transitioning back to continuous-blower airflow.

When the call for continuous fan is removed, the indoor blower will continue operating for an additional 5 seconds before shutting down, if no other function requires blower motor operation.

COMPONENT TEST

The Infinity Furnace Board features a gas component test system to help diagnose a system problem in the case of a gas component failure. To initiate the component test procedure, ensure that there are no UI inputs to the control (the ABCD connector can be removed from the Infinity control board for this operation) and all time delays have expired. Turn on setup switch SW1-6.

NOTE: The component test feature will not operate if the control is receiving any UI signals or until all time delays have expired.

The component test sequence is as follows:

1. The control turns the inducer motor ON and keeps it ON through step 3.
2. After waiting 10 seconds, the control turns the igniter ON for 15 seconds, then OFF.
3. The control then turns the indoor fan motor on for 15 seconds, then OFF.
4. After shutting the blower motor OFF, the control runs the inducer for 10 seconds, then turns it OFF.

NOTE: The EAC terminals are energized when the blower is operating.

After the component test is completed, one or more status codes (11, 25, or 41) will flash. See component test section or Status Code Label for explanation of status codes.

NOTE: To repeat component test, turn setup switch SW1-6 to OFF and then back ON.

Step 3—Check for Refrigerant Leaks

Locate and repair refrigerant leaks and charge the unit as follows:

1. Use both high- and low-pressure ports to relieve system pressure and reclaim remaining refrigerant.
2. Repair leak following accepted practices.

NOTE: Install a filter drier whenever the system has been opened for repair.

3. Check system for leaks using an approved method.
4. Evacuate refrigerant system and reclaim refrigerant if no additional leaks are found.
5. Charge unit with Puron (R-410A) refrigerant, using a volumetric-charging cylinder or accurate scale. Refer to unit rating plate for required charge.

Step 4—Start-Up Adjustments

Complete the required procedures given in the Pre-Start-Up section before starting the unit. Do not jumper any safety devices when operating the unit. Do not operate the unit in cooling mode when the outdoor temperature is below 40°F (unless low-ambient operation is enabled in the UI). Do not rapid cycle the compressor. Allow 5 min. between "on" cycles to prevent compressor damage.

CHECKING COOLING AND HEATING CONTROL OPERATION

See UI Installation Instructions for detailed system CHECKOUT.

CHECKING AND ADJUSTING REFRIGERANT CHARGE

The refrigerant system is fully charged with Puron (R-410A) refrigerant and is tested and factory sealed.

NOTE: Any adjustment to refrigerant charge must be done with unit operating in HIGH stage.

NOTE: Adjustment of the refrigerant charge is not required unless the unit is suspected of not having the proper R-410A charge. The charging label and the tables shown refer to system temperatures and pressures in cooling mode only. A refrigerant charging label is attached to the outside of the unit. If charge level is suspect in heat pump heating mode, reclaim all refrigerant and charge to rating plate amount. (This information may be obtained from the physical data table also.)

IMPORTANT: When evaluating the refrigerant charge, an indicated adjustment to the specified factory charge must always be very minimal. If a substantial adjustment is indicated, an abnormal condition exists somewhere in the cooling system, such as insufficient airflow across either coil or both coils.

REFRIGERANT CHARGE

The amount of refrigerant charge is listed on the unit rating plate and/or the physical data table. Refer to the Refrigeration Service Techniques Manual, Refrigerants Section.

NO CHARGE

Check for leak. Use standard evacuating techniques. After evacuating system, weigh in the specified amount of refrigerant (refer to system rating plate).

LOW CHARGE COOLING

Use Cooling Charging Chart (Fig. 22). Vary refrigerant until the conditions of the chart are met. Note that charging charts are different from type normally used. Charts are based on charging the units to correct subcooling for the various operating conditions.

Accurate pressure gauge and temperature sensing devices are required. Connect the pressure gauge to the service port on the suction line. Mount the temperature sensing device on the suction line and insulate it so that the outdoor ambient does not affect the reading. Indoor air CFM must be within the normal operating range of the unit.

TO USE COOLING CHARGING CHARTS

Take the liquid line temperature and read the manifold pressure gauges.

Refer to the chart to determine what the liquid line temperature should be.

NOTE: If the problem causing the inaccurate readings is a refrigerant leak, refer to Check for Refrigerant Leaks section.

NON-COMMUNICATING EMERGENCY COOLING / HEATING MODE: 4-WIRE THERMOSTAT

This mode of operation is provided only in the case where the UI has failed or is otherwise unavailable. If communications cannot be established with the UI, the Infinity furnace board will enable the standard thermostat input terminals to allow simple thermostatic control of the 48XT unit.

For control with a standard thermostat, disconnect the ABCD connectors from both control boards and using No. 18 AWG color-coded, insulated type 90°C minimum or equivalent wire, make the connections between the standard thermostat, the furnace board, and the HP/AC board per Fig. 21. Recommend the use of interconnecting wire with 105C, 600V, 2/64" insulation.

The Infinity control will respond to cooling and heating demands with the maximum safe airflow based on gas furnace output and unit cooling capacity.

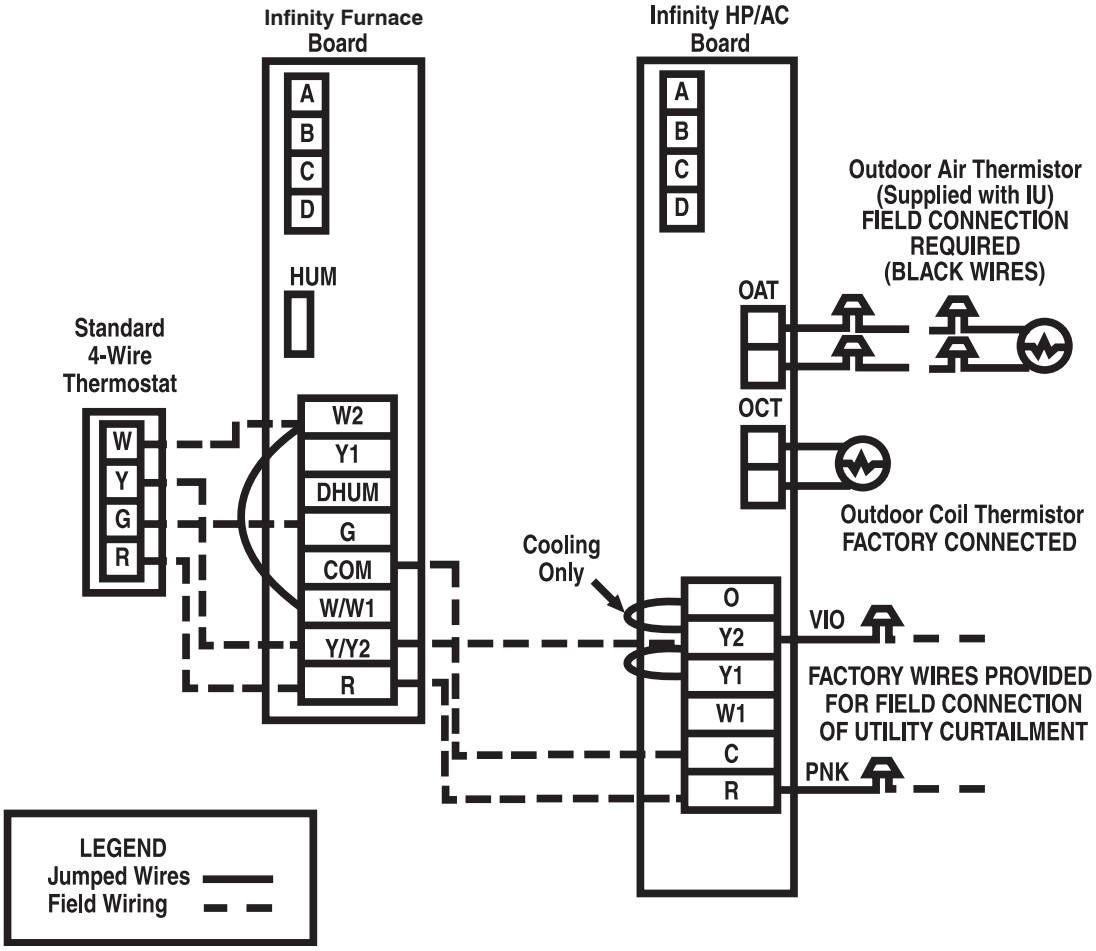

Fig. 21 - Non-Communicating Emergency Cooling/Heating Wiring Connections

Required Subcooling °F (°C)

Model Size	Outdoor Ambient Temperature 75 (24)	82 (28)	85 (29)	95 (35)	105 (41)
024	15.5 (8.6)	15.6 (8.7)	15.7 (8.7)	15.8 (8.8)	15.9 (8.9)
030	16.8 (9.3)	16.4 (9.1)	16.2 (9)	15.6 (8.7)	15 (8.3)
036	14 (7.7)	13.9 (7.7)	13.9 (7.7)	13.8 (7.7)	13.7 (7.6)
042	19.2 (10.7)	19.1 (10.6)	19.1 (10.6)	18.9 (10.5)	18.7 (10.4)
048	21 (11.6)	20.8 (11.5)	20.7 (11.5)	20.4 (11.3)	20.2 (11.2)
060	16.2 (9)	16.6 (9.2)	16.8 (9.3)	17.3 (9.6)	17.8 (9.9)

Required Liquid Line Temperature for a Specific Subcooling (R-410A)

Pressure (psig)	Required Subcooling (°F) 5	10	15	25	Pressure (kPa)	Required Subcooling (°C) 3	6	8	14
174	56	51	46	36	1200	13	11	8	2
181	59	54	49	39	1248	15	12	9	4
188	61	56	51	41	1296	16	13	10	5
195	63	58	53	43	1344	17	14	12	6
202	65	60	55	45	1393	18	16	13	7
209	67	62	57	47	1441	20	17	14	9
216	69	64	59	49	1489	21	18	15	10
223	71	66	61	51	1537	22	19	16	11
189	61	56	51	41	1303	16	13	11	5
196	63	58	53	43	1351	17	15	12	6
203	66	61	56	46	1399	19	16	13	8
210	68	63	58	48	1448	20	17	14	9
217	70	65	60	50	1496	21	18	15	10
224	72	67	62	52	1544	22	19	16	11
231	74	69	64	54	1593	23	20	18	12
238	76	71	66	56	1641	24	21	19	13
245	77	72	67	57	1689	25	22	20	14
252	79	74	69	59	1737	26	23	21	15
260	81	76	71	61	1792	27	25	22	16
268	83	78	73	63	1848	29	26	23	17
276	85	80	75	65	1903	30	27	24	19
284	87	82	77	67	1958	31	28	25	20
292	89	84	79	69	2013	32	29	26	21
300	91	86	81	71	2068	33	30	27	22
309	93	88	83	73	2130	34	31	28	23
318	95	90	85	75	2192	35	32	29	24
327	97	92	87	77	2254	36	33	31	25
336	99	94	89	79	2316	37	34	32	26
345	101	96	91	81	2378	38	35	33	27
354	103	98	93	83	2440	39	36	34	28
364	105	100	95	85	2509	40	38	35	29
374	107	102	97	87	2578	41	39	36	30
384	108	103	98	88	2647	42	40	37	31
394	110	105	100	90	2716	44	41	38	32
404	112	107	102	92	2785	45	42	39	33
414	114	109	104	94	2854	46	43	40	34
424	116	111	106	96	2923	47	44	41	35
434	118	113	108	98	2992	48	45	42	36
444	119	114	109	99	3061	48	46	43	37
454	121	116	111	101	3130	49	47	44	38
464	123	118	113	103	3199	50	48	45	39
474	124	119	114	104	3268	51	48	46	40
484	126	121	116	106	3337	52	49	47	41
494	127	122	117	107	3406	53	50	47	42
504	129	124	119	109	3475	54	51	48	43
514	131	126	121	111	3544	55	52	49	44
524	132	127	122	112	3612	56	53	50	45
534	134	129	124	114	3681	56	54	51	45

Charging Procedure

1- Measure Discharge line pressure by attaching a gauge to the service port
2- Measure the Liquid line temperature by attaching a temperature sensing device to it
3- Insulate the temperature sensing device so that the Outdoor Ambient doesn't affect the reading
4- Refer to the required Subcooling in the table based on the model size and the Outdoor Ambient temperature
5- Interpolate if the Outdoor temperature lies in between the table values. Extrapolate if the temperature lies beyond the table range
6- Find the Pressure Value corresponding to the the measured Pressure on the Compressor Discharge line
7- Read across from the Pressure reading to obtain the Liquid line temperature for a required Subcooling
8- Add Charge if the measured temperature is higher than the liquid line temperature value in the table
9- Add Charge using the service connection on the Suction line of the Compressor

A06315

Fig. 22 - Cooling Charging Table-Subcooling

48XT

Table 8—ECM Wet Coil Pressure Drop (in. wg)

UNIT SIZE	STANDARD CFM (SCFM) 600	700	800	900	1000	1100	1200	1300	1400	1500	1600	1700	1800	1900	2000	2100
024	0.005	0.007	0.010	0.012	0.015	–	–	–	–	–	–	–	–	–	–	–
030	–	0.007	0.010	0.012	0.015	0.018	0.021	0.024	–	–	–	–	–	–	–	–
036	–	–	–	0.019	0.023	0.027	0.032	0.037	0.042	0.047	–	–	–	–	–	–
042	–	–	–	–	0.014	0.017	0.020	0.024	0.027	0.031	0.035	0.039	0.043	–	–	–
048	–	–	–	–	–	–	0.027	0.032	0.036	0.041	0.046	0.052	0.057	0.063	0.068	–
060	–	–	–	–	–	–	–	–	–	0.029	0.032	0.036	0.040	0.045	0.049	0.053

Table 9—Filter Pressure Drop Table (in. wg)

FILTER SIZE	CFM 500	600	700	800	900	1000	1100	1200	1300	1400	1500	1600	1700	1800	1900	2000	2100	2200	2300
20X20X1	0.05	0.07	0.08	0.1	0.12	0.13	0.14	0.15	—	—	—	—	—	—	—	—	—	—	—
24X30X1	—	—	—	—	0.05	0.6	0.07	0.07	0.08	0.09	0.1	—	—	—	—	—	—	—	—
24X36X1	—	—	—	—	—	—	—	0.06	0.07	0.07	0.08	0.09	0.09	0.10	0.11	0.12	0.13	0.14	0.14

MAINTENANCE

To ensure continuing high performance, and to minimize the possibility of premature equipment failure, periodic maintenance must be performed on this equipment. This Hybrid Heat unit should be inspected at least once each year by a qualified service person. To troubleshoot unit, refer to Table 10, Troubleshooting Chart and additional information int he Start-Up and Troublshooting section.

NOTE TO EQUIPMENT OWNER: Consult your local dealer about the availability of a maintenance contract.

⚠ WARNING

PERSONAL INJURY AND UNIT DAMAGE HAZARD

Failure to follow this warning could result in personal injury or death and possible unit component damage.

The ability to properly perform maintenance on this equipment requires certain expertise, mechanical skills, tools and equipment. If you do not possess these, do not attempt to perform any maintenance on this equipment, other than those procedures recommended in the Owner's Manual.

⚠ WARNING

ELECTRICAL SHOCK HAZARD

Failure to follow these warnings could result in personal injury or death:

1. Turn off electrical power to the unit before performing any maintenance or service on this unit.
2. Use extreme caution when removing panels and parts.
3. Never place anything combustible either on or in contact with the unit.

⚠ CAUTION

UNIT OPERATION HAZARD

Failure to follow this caution may result in equipment damage or improper operation.

Errors made when reconnecting wires may cause improper and dangerous operation. Label all wires prior to disconnecting when servicing.

The minimum maintenance requirements for this equipment are as follows:

1. Inspect air filter(s) each month. Clean or replace when necessary.
2. Inspect indoor coil, drain pan, and condensate drain each cooling season for cleanliness. Clean when necessary.
3. Inspect indoor fan motor and wheel for cleanliness each cooling season. Clean when necessary.
4. Check electrical connections for tightness and controls for proper operation each cooling season. Service when necessary.
5. Check for restrictions on inducer outlet. Clean flue hood.
6. Inspect burner compartment before each heating season for rust, corrosion, soot or excessive dust.
7. Inspect all accessories. Perform any service or maintenance to the accessories as recommended in the accessory instructions.

Step 1—Air Filter

IMPORTANT: Never operate the unit without a suitable air filter in the return-air duct system. Always replace the filter with the same dimensional size and type as originally installed. See Table 1 for recommended filter sizes.

Inspect air filter(s) at least once each month and replace (throwaway-type) or clean (cleanable-type) at least twice during each cooling season and twice during the heating season, or whenever the filter becomes clogged with dust and lint.

Step 2—Indoor Fan and Motor

NOTE: All motors are pre-lubricated. Do not attempt to lubricate these motors.

For longer life, operating economy, and continuing efficiency, clean accumulated dirt and grease from the blower wheel and motor annually.

Step 3—Inducer Blower

NOTE: All motors are pre-lubricated. Do not attempt to lubricate these motors.

Clean periodically to assure proper airflow and heating efficiency. Inspect blower wheel every fall and periodically during the heating season. For the first heating season, inspect blower wheel bi-monthly to determine proper cleaning frequency.

Step 4—Limit Switch

Remove unit access panel to gain access to the limit switch. The limit switch is located above the indoor blower housing.

NOTE: On small chassis units, a second limit switch is located beside the indoor blower housing.

Step 5—Burner Ignition

Unit is equipped with a direct spark ignition 100 percent lockout system. Ignition module is located in the control box. Module contains a self-diagnostic LED. During servicing, refer to label diagram for LED interpretation.

Step 6—Main Burners

At the beginning of each heating season, inspect for deterioration or blockage due to corrosion or other causes. Observe the main burner flames and adjust, if necessary.

⚠ CAUTION

EQUIPMENT DAMAGE HAZARD

Failure to follow this caution may result in equipment damage or improper operation.

When servicing gas train, do not hit or plug orifice spuds.

Removal of Gas Train

To remove the gas train for servicing:

1. Shut off main gas valve.
2. Shut off power to unit.
3. Remove unit access panel.
4. Disconnect gas piping at unit gas valve.
5. Remove wires connected to gas valve. Mark each wire.
6. Remove ignitor and sensor wires at the ignitor module.
7. Remove the mounting screw that attaches the burner rack to the unit base.
8. Slide the burner rack out of the unit.
9. To reinstall, reverse the procedure outlined above.

Step 7—Inducer Pressure Switch

Inspect pressure switch connections. Inspect pressure switch tube for cracks or restrictions. Replace if needed.

⚠ WARNING

ELECTRICAL SHOCK HAZARD

Failure to follow this warning could result in personal injury or death.

Disconnect and tag electrical power to the unit before cleaning and lubricating the blower motor and wheel.

Step 8—Outdoor Coil, Indoor Coil, and Condensate Drain Pan

Inspect the condenser coil, evaporator coil, and condensate drain pan at least once each year.

The coils are easily cleaned when dry; therefore, inspect and clean the coils either before or after each cooling season. Remove all obstructions, including weeds and shrubs, that interfere with the airflow through the condenser coil. Straighten bent fins with a fin comb. If coated with dirt or lint, clean the coils with a vacuum cleaner, using the soft brush attachment. Be careful not to bend the fins. If coated with oil or grease, clean the coils with a mild detergent and water solution. Rinse coils with clear water, using a garden hose.

Be careful not to splash water on motors, insulation, wiring, or air filter(s). For best results, spray condenser coil fins from inside to outside the unit. On units with an outer and inner condenser coil, be sure to clean between the coils. Be sure to flush all dirt and debris from the unit base.

Inspect the drain pan and condensate drain line when inspecting the coils. Clean the drain pan and condensate drain by removing all foreign matter from the pan. Flush the pan and drain trough with clear water. Do not splash water on the insulation, motor, wiring, or air filter(s). If the drain trough is restricted, clear it with a "plumbers snake" or similar probe device.

Step 9—Outdoor Fan

⚠ CAUTION

UNIT OPERATION HAZARD

Failure to follow this caution may result in damage to unit components.

Keep the outdoor fan free from all obstructions to ensure proper cooling operation. Never place articles on top of the unit.

1. Remove 4 screws holding outdoor grille and motor to top cover.
2. Turn motor/grille assembly upside down on top cover to expose fan blade.
3. Inspect the fan blades for cracks or bends.
4. If fan needs to be removed, loosen setscrew and slide fan off motor shaft.
5. When replacing fan blade, position blade according to the table shown in Fig. 23.
6. Ensure that set screw engages the flat area on the motor shaft when tightening.
7. Replace grille.

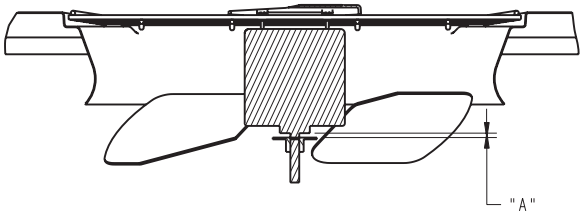

Infinity Top

A06035

UNIT SIZE	"A" DIM. IN. (MM)
024	1 (26)
030	1 (26)
036	1 (26)
042	1 (26)
048	11/32 (9)
060	9/16 (14)

Fig. 23 - Outdoor Fan Blade Clearance

Step 10—Electrical Controls and Wiring

Inspect and check the electrical controls and wiring annually. Be sure to turn off the electrical power to the unit.

Remove access panel to locate all the electrical controls and wiring. Check all electrical connections for tightness. Tighten all screw connections. If any smoky or burned connections are noticed, disassemble the connection, clean all the parts, re-strip the wire end and reassemble the connection properly and securely.

After inspecting the electrical controls and wiring, replace all the panels. Start the unit, and observe at least one complete cooling cycle to ensure proper operation. If discrepancies are observed in operating cycle, or if a suspected malfunction has occurred, check each electrical component with the proper electrical instrumentation. Refer to the unit wiring label when making these checks.

Step 11—Refrigerant Circuit

Inspect all refrigerant tubing connections and the unit base for oil accumulation annually. Detecting oil generally indicates a refrigerant leak.

If oil is detected or if low performance is suspected, leak test all refrigerant tubing using an electronic leak detector, or liquid-soap solution. If a refrigerant leak is detected, refer to Check for Refrigerant Leaks section.

If no refrigerant leaks are found and low performance is suspected, refer to Checking and Adjusting Refrigerant Charge section.

Step 12—Indoor Airflow

The heating and/or cooling airflow does not require checking unless improper performance is suspected. If a problem exists, be sure that all supply- and return-air grilles are open and free from obstructions, and that the air filter is clean.

Step 13—Metering Devices-TXV & AccuRater® Piston

This unit uses 2 types of metering devices. The outdoor metering device is a fixed orifice and is contained in the brass-hex body in the liquid line feeding the outdoor coils. The indoor metering device is a TXV-type device. No maintenance should be required.

Step 14—Pressure Switches - Refrigerant Circuit

Pressure switches are protective devices integrated into the control circuit (low voltage). They shut off compressor if abnormally high or low pressures are present in the refrigeration circuit. These pressure switches are specifically designed to operate with Puron (R-410A) systems. R-22 pressure switches must not be used as replacements for the Puron (R-410A) system.

Loss-of-Charge (Low Pressure) Switch

This switch is located on the liquid line and protects against low suction pressures caused by such events as loss of charge, low airflow across indoor coil, dirty filters, etc. It opens if the system pressure drops to about 20 psig. If system pressure is above this, switch should be closed.

High-Pressure Switches (HPS & HPS2)

The high-pressure switches are located on the discharge line and protects against excessive condenser coil pressure. HPS opens at 670 psig shutting down the compressor, while HPS2 opens at 565, limiting the compressor to low-stage operation only.

High pressure may be caused by a dirty outdoor coil, failed fan motor, or outdoor air recirculation.

To check switches:

1. Turn off all power to unit.
2. Disconnect leads on switch.
3. Apply ohm meter leads across switch. You should have continuity on a good switch.

NOTE: Because these switches are attached to refrigeration system under pressure, it is not advisable to remove this device for troubleshooting unless you are reasonably certain that a problem exists. If switch must be removed, remove and recover all system charge so that pressure gauges read 0 psi. Never open system without breaking vacuum with dry nitrogen.

Step 15—Copeland Scroll Compressor (Puron Refrigerant)

The compressor used in this product is specifically designed to operate with Puron (R-410A) refrigerant and cannot be interchanged.

The compressor is an electrical, as well as mechanical, device. Exercise extreme caution when working near compressors. Power should be shut off, if possible, for most troubleshooting techniques. Refrigerants present additional safety hazards.

⚠ WARNING

EXPLOSION, FIRE HAZARD

Failure to follow this warning could result in personal injury or death and/or property damage.

Wear safety glasses and gloves when handling refrigerants. Keep torches and other ignition sources away from refrigerants and oils.

The scroll compressor pumps refrigerant throughout the system by the interaction of a stationary and an orbiting scroll. The scroll compressor has no dynamic suction or discharge valves, and it is more tolerant of stresses caused by debris, liquid slugging, and flooded starts. The compressor is equipped with an anti-rotational device and an internal pressure-relief port. The anti-rotational device prevents the scroll from turning backwards and replaces the need for a cycle protector. The pressure-relief port is a safety device, designed to protect against extreme high pressure. The relief port has an operating range between 550 and 625 psi differential pressure.

The Copeland scroll compressor uses Mobil 3MA POE oil. This is the only oil allowed for oil recharge.

Step 16—Refrigerant System

This step covers the refrigerant system of the 48XT, including the compressor oil needed, servicing systems on roofs containing synthetic materials, the filter drier, and refrigerant charging.

REFRIGERANT

⚠ WARNING

UNIT OPERATION AND SAFETY HAZARD

Failure to follow this warning could result in personal injury or equipment damage.

This system uses Puron (R-410A) refrigerant which has higher operating pressures than R-22 and other refrigerants. No other refrigerant may be used in this system. Gauge set, hoses, and recovery system must be designed to handle Puron. If you are unsure, consult the equipment manufacturer.

COMPRESSOR OIL

The compressor in this system uses a polyolester (POE) oil, Mobil 3MA POE. This oil is extremely hygroscopic, meaning it absorbs water readily. POE oils can absorb 15 times as much water as other oils designed for HCFC and CFC refrigerants. Take all necessary precautions to avoid exposure of the oil to the atmosphere.

SERVICING SYSTEMS ON ROOFS WITH SYNTHETIC MATERIALS

POE (polyolester) compressor lubricants are known to cause long term damage to some synthetic roofing materials.

Exposure, even if immediately cleaned up, may cause embrittlement (leading to cracking) to occur in one year or more. When performing any service that may risk exposure of compressor oil to the roof, take appropriate precautions to protect roofing. Procedures which risk oil leakage include, but are not limited to, compressor replacement, repairing refrigerant leaks, and replacing refrigerant components such as filter drier, pressure switch, metering device, coil, accumulator, or reversing valve.

Synthetic Roof Precautionary Procedure

1. Cover extended roof working area with an impermeable polyethylene (plastic) drip cloth or tarp. Cover an approximate 10 X 10 ft area.
2. Cover area in front of the unit service panel with a terry cloth shop towel to absorb lubricant spills and prevent run-offs, and protect drop cloth from tears caused by tools or components.
3. Place terry cloth shop towel inside unit immediately under component(s) to be serviced and prevent lubricant run-offs through the louvered openings in the unit base.
4. Perform required service.
5. Remove and dispose of any oil-contaminated material per local codes.

LIQUID-LINE BI-FLOW FILTER DRIER

The bi-flow filter drier is specifically designed to operate with Puron. Use only factory-authorized components. Filter drier must be replaced whenever the refrigerant system is opened. When removing a filter drier, use a tubing cutter to cut the drier from the system. Do not unsweat a filter drier from the system. Heat from unsweating will release moisture and contaminants from drier into system.

PURON (R-410A) REFRIGERANT CHARGING

Refer to unit information plate and charging chart. **Some R-410A refrigerant cylinders contain a dip tube to allow liquid refrigerant to flow from cylinder in upright position.** For cylinders equipped with a dip tube, charge Puron units with cylinder in upright position and a commercial metering device in manifold hose. Charge refrigerant into suction line.

TROUBLESHOOTING

LED DESCRIPTION

LEDs built into Infinity control boards provide installer or service person information concerning operation and/or fault condition of the unit controls and ECM motor. This information is also available at the system UI in text with basic troubleshooting instructions. Careful use of information displayed will reduce the need for extensive manual troubleshooting. See section B in Start-Up and Troubleshooting and Table 5, as well as the UI instructions, for additional information. Additional Troubleshooting information can be found in Table 10.

MAJOR COMPONENTS

2-STAGE HP/AC BOARD

The two-stage HP/AC control board controls the following functions:

- Low- and high-stage compressor operation
- Outdoor fan motor operation
- Reversing valve operation
- Defrost operation
- Low ambient cooling
- Crankcase heater operation
- Compressor external protection
- Pressure switch monitoring (refrigerant)
- Time delays

FURNACE BOARD

The furnace board controls the following functions:

- Indoor blower operation
- Gas valve
- Inducer motor
- Remote sparker module
- Pressure switch monitoring (gas)

SYSTEMS COMMUNICATION FAILURE

If communication with the Infinity Control is lost with the UI, the controls will flash the appropriate fault codes. Check the wiring to the UI, indoor and outdoor units.

MODEL PLUG

The HP/AC control board must have a valid model plug to operate. If a valid model plug is not detected, it will not operate and the control will flash the appropriate fault code, shown in Table 5.

PRESSURE SWITCH PROTECTION-REFRIGERANT

The unit is equipped with high- and low-pressure switches. If the control senses the opening of a high- or low-pressure switch, it will respond as follows:

1. De-energize the compressor contactor (HPS1 & LPS) or the compressor solenoid contactor (HPS2).
2. Keep the outdoor fan operating for 15 minutes.
3. Display the appropriate fault codes.
4. After a 15 minute delay, if there is still a call for cooling and the LPS or HPS is reset, the compressor contactor is energized.
5. If LPS or HPS has not closed after a 15 minute delay, the outdoor fan is turned off. If the open switch closes anytime after the 15-minute delay, then resume operation with a call for cooling.
6. If LPS or HPS trips 3 consecutive cycles, the unit operation is locked out for 4 hours.
7. In the event of a high-pressure switch trip or high pressure lockout, check the refrigerant charge, outdoor fan operation and outdoor coil for airflow restrictions.
8. In the event of a low-pressure switch trip or low pressure lockout, check the refrigerant charge and indoor airflow.

CONTROL FAULT

If the HP/AC control board has failed, the control will flash the appropriate fault code (See Table 5). The control board should be replaced.

BROWN OUT PROTECTION

If the line voltage is less than 187v for at least 4 seconds, the appropriate compressor contactor and fan relay are de-energized. Compressor and fan operation are not allowed until voltage is a minimum of 190v. The control will flash the appropriate fault code (See Table 5).

230V LINE (POWER DISCONNECT) DETECTION

If there is no 230v at the compressor contactor when the unit is powered and cooling demand exists, the appropriate error code is displayed. Verify that the disconnect is closed and 230v wiring is connected to the unit.

COMPRESSOR VOLTAGE SENSING

The control board input terminals VS and L2 (See Fig. 17) are used to detect compressor voltage status, and alert the user of potential problems. The control continuously monitors the high voltage on the run capacitor of the compressor motor. Voltage should be present any time the compressor contactor is energized, and voltage should not be present when the contactor is de-energized.

CONTACTOR SHORTED DETECTION

If there is compressor voltage sensed when there is no demand for compressor operation, the contactor may be stuck closed or there is a wiring error. The control will flash the appropriate fault code.

COMPRESSOR THERMAL CUTOUT

If the control senses the compressor voltage after start-up, and is then absent for 10 consecutive seconds while cooling demand exists, the thermal protector is open. The control de-energizes the compressor contactor for 15 minutes, but continues to operate the outdoor fan. The control Status LED will flash the appropriate code shown in Table 5. After 15 minutes, with a call for low or high stage cooling, the compressor contactor is energized. If the thermal protector has not re-set, the outdoor fan is turned off. If the call for cooling continues, the control will energize the compressor contactor every 15 minutes. If the thermal protector closes (at the next 15 minute interval), check the unit will resume operation.

If the thermal cutout trips for three consecutive cycles, then unit operation is locked out for 4 hours and the appropriate fault code is displayed.

NO 230V AT COMPRESSOR

If the compressor voltage is not sensed when the compressor should be starting, the contactor may be stuck open or there is a wiring error. The control will flash the appropriate fault code. Check the contactor and control box wiring.

TROUBLESHOOTING UNIT FOR PROPER SWITCHING BETWEEN LOW & HIGH STAGES

Check the suction pressures at the service valves. Suction pressure should be reduced by 3-10% when switching from low to high capacity.

NOTE: The liquid pressures are very similar between low and high stage operation, so liquid pressure should not be used for troubleshooting.

Compressor current should increase 20-45% when switching from low to high stage. The compressor solenoid, when energized in high stage, should measure 24vac.

COMPRESSOR INTERNAL RELIEF

The compressor is protected by an internal pressure relief (IPR) which relieves discharge gas into compressor shell when differential between suction and discharge pressures exceeds 550 - 625 psi. The compressor is also protected by an internal overload attached to motor windings.

TEMPERATURE THERMISTORS

Thermistors are electronic devices which sense temperature. As the temperature increases, the resistance decreases. Thermistors are used to sense outdoor ambient (OAT) and coil temperature (OCT). Refer to Fig. 24 for resistance values versus temperature. See Fig. 25 for OCT location.

If the outdoor ambient or coil thermistor should fail, the HP/AC control will flash the appropriate fault code (See Table 5).

IMPORTANT: Coil thermistor is factory mounted. Check to insure thermistor is mounted properly. Outdoor air thermistor (OAT) is field mounted and connected. Verify that the OAT has been properly installed.

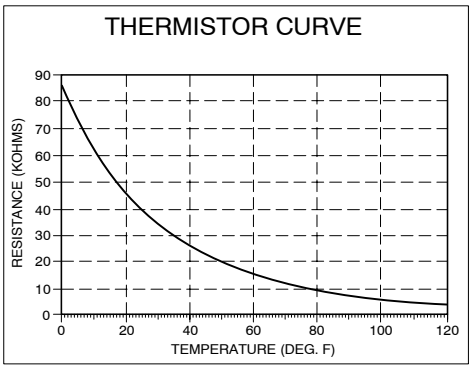

A91431

Fig. 24 - Resistance Values Versus Temperature

THERMISTOR SENSOR COMPARISON

The control continuously monitors and compares the outdoor air temperature sensor and outdoor coil temperature sensor to ensure proper operating conditions. The comparison is:

- In cooling mode, if the outdoor air sensor indicates ≥ 10°F warmer than the coil sensor (or) the outdoor air sensor indicates ≥ 20°F cooler than the coil sensor, the sensors are out of range.
- In heating if the outdoor air sensor indicates ≥ 35°F warmer than the coil sensor (or) the outdoor air sensor indicates ≥ 10°F cooler than the coil sensor, the sensors are out of range.

If the sensors are out of range, the control will flash the appropriate fault code as shown in Table 5.

The thermistor comparison is not performed during low ambient cooling operation.

FAILED THERMISTOR DEFAULT OPERATION

Factory defaults have been provided in the event of failure of outdoor air thermistor and/or coil thermistor.

If the OAT sensor should fail, low ambient cooling will not be allowed and the one-minute outdoor fan off delay will not occur. Defrost will be initiated based on coil temperature and time.

If the OCT sensor should fail, low ambient cooling will not be allowed. Defrost will occur at each time interval during heating operation, but will terminate after 5 minutes.

If there is a thermistor out of range error, defrost will occur at each time interval during heating operation, but will terminate after 5 minutes.

Refer to the Troubleshooting Chart (Table 10) for additional troubleshooting information.

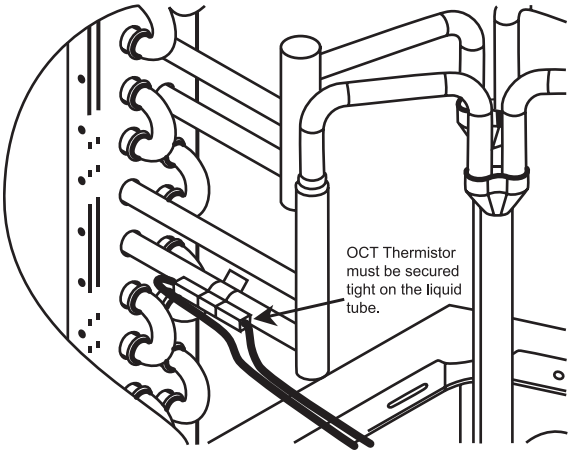

Fig. 25 - Outdoor Coil Thermistor (OCT) Attachment

FINAL CHECKS

IMPORTANT: Before leaving job, be sure to do the following:

1. Ensure that all wiring is routed away from tubing and sheet metal edges to prevent rub-through or wire pinching.
2. Ensure that all wiring and tubing is secure in unit before adding panels and covers. Securely fasten all panels and covers.
3. Tighten service valve stem caps to 1/2-turn past finger tight.
4. Leave Users Manual with owner. Explain system operation and periodic maintenance requirements outlined in manual.
5. Fill out Start-Up Checklist located at the back of this manual and place in customer file.

CARE AND MAINTENANCE

For continuing high performance and to minimize possible equipment failure, periodic maintenance must be performed on this equipment.

Frequency of maintenance may vary depending upon geographic areas, such as coastal applications. See Users Manual for information.

HEAT PUMP WITH PURON

REFRIGERATION SECTION QUICK-REFERENCE GUIDE

Puron refrigerant operates at 50-70 percent higher pressures than R-22. Be sure that servicing equipment and replacement components are designed to operate with Puron. Puron refrigerant cylinders are rose colored.

- Puron refrigerant cylinders manufactured prior to March 1, 1999, have a dip tube that allows liquid to flow out of cylinder in upright position. Cylinders manufactured March 1, 1999 and later DO NOT have a dip tube and MUST be positioned upside down to allow liquid to flow.
- Recovery cylinder service pressure rating must be 400 psig. DOT 4BA400 or DOT BW400.
- Puron systems should be charged with liquid refrigerant. Use a commercial-type metering device in the manifold hose.
- Manifold sets should be 750 psig high side and 200 psig low side with 520 psig low side retard.
- Use hoses with 750 psig service pressure rating.
- Leak detectors should be designed to detect HFC refrigerant.
- Puron, as with other HFCs, is only compatible with POE oils.
- Vacuum pumps will not remove moisture from oil.
- Only use factory-specified liquid-line filter driers with rated working pressures no less than 600 psig.
- Do not install a suction-line filter drier in liquid line.
- POE oils absorb moisture rapidly. Do not expose oil to atmosphere.
- POE oils may cause damage to certain plastics and roofing materials.
- Wrap all filter driers and service valves with wet cloth when brazing.
- A Puron liquid-line filter drier is required on every unit.
- Do not use an R-22 TXV.
- **Never** open system to atmosphere while it is under a vacuum.
- When system must be opened for service, break vacuum with dry nitrogen and replace filter driers.
- Do not vent Puron into the atmosphere.
- Observe all **warnings, cautions,** and **bold** text.
- Do not leave Puron suction line driers in place for more than 72 hrs.

Table 10—Troubleshooting Chart-Heat Pump Operation

SYMPTOM	CAUSE	REMEDY
Compressor and outdoor fan will not start	Power failure	Call power company
	Fuse blown or circuit breaker tripped	Replace fuse or reset circuit breaker
	Defective contactor, transformer, HP/AC control board, or high-pressure, loss-of-charge or low-pressure switch	Replace component
	Insufficient line voltage	Determine cause and correct
	Incorrect or faulty wiring	Check wiring diagram and rewire correctly
	User Interface setting too low/too high	Reset UI setting
	Units have a 5-minute time delay	DO NOT bypass this compressor time delay–wait for 5 minutes until time-delay relay is de-energized
Compressor will not start but outdoor fan runs	Faulty wiring or circuit Loose connections in compressor	Check wiring and repair or replace
	Compressor motor burned out, seized, or internal overload open	Determine cause Replace compressor
	Defective run capacitor, overload, or PTC (positive temperature coefficient) thermistor	Determine cause and replace
	Low input voltage (20 percent low)	Determine cause and correct
Compressor cycles (other than normally satisfying) cooling/heating calls	Refrigerant overcharge or undercharge	Recover refrigerant, evacuate system, and recharge to capacities shown on rating plate
	Defective compressor	Replace and determine cause
	Insufficient line voltage	Determine cause and correct
	Blocked outdoor coil	Determine cause and correct
	Defective run/start capacitor, overload or start relay	Determine cause and replace
	Faulty outdoor fan motor or capacitor	Replace
	Damaged reversing valve	Determine cause and correct
	Restriction in refrigerant system	Locate restriction and remove
Compressor operates continuously	Dirty air filter	Replace filter
	Unit undersized for load	Decrease load or increase unit size
	UI temperature set too low/too high	Reset UI setting
	Low refrigerant charge	Locate leak, repair, and recharge
	Air in system	Recover refrigerant, evacuate system, and recharge
	Outdoor coil dirty or restricted	Clean coil or remove restriction
Excessive head pressure	Dirty air filter	Replace filter
	Dirty indoor or outdoor coil	Clean coil
	Refrigerant overcharged	Recover excess refrigerant
	Air in system	Recover refrigerant, evacuate system, and recharge
	(Heat) Indoor air restricted or recirculating	Determine cause and correct
	Indoor or outdoor air restricted or air short-cycling	Determine cause and correct

Continued next page.

Table 10—Troubleshooting Chart-Heat Pump Operation (Cont'd)

SYMPTOM	CAUSE	REMEDY
Head pressure too low	Low refrigerant charge	Check for leaks, repair and recharge
	Restriction in liquid tube	Remove restriction
Excessive suction pressure	(Cool) High Heat load	Check for source and eliminate
	Reversing valve hung up or leaking internally	Replace valve
	Refrigerant overcharged	Recover excess refrigerant
Suction pressure too low	(Cool) Dirty air filter	Replace filter
	Low refrigerant charge	Check for leaks, repair and recharge
	Metering device or low side restricted	Remove source of restriction
	(Cool) Insufficient coil airflow	Increase air quantity Check filter–replace if necessary
	(Cool) Temperature too low in conditioned area	Reset UI setting
	(Cool) Outdoor ambient below 55°F	Verify low-ambient cooling enabled in UI
	Filter drier restricted	Replace
IFM does not run	Blower wheel not secured to shaft	Properly tighten blower wheel to shaft
	Insufficient voltage at motor	Determine cause and correct
	Power connectors not properly sealed	Connectors should snap easily; do not force
IFM operation is intermittent	Water dripping into motor	Verify proper drip loops in connector wires
	Connectors not firmly sealed	Gently pull wires individually to be sure they are crimped into the housing

IFM-Indoor Fan Motor

48XT

Table 10—Troubleshooting Chart-Gas Furnace Operation

SYMPTOM	CAUSE	REMEDY
Burners will not ignite	Water in gas line	Drain. Install drip leg.
	No power to unit	Check power supply fuses, wiring or circuit breaker.
	No 24-v power supply to control circuit	Check transformer. NOTE: Some transformers have internal over-current protection that requires a cool-down period to reset.
	Mis-wired or loose connections	Check all wiring and wire nut connections
	Misaligned spark electrodes	Check flame ignition and sense electrode positioning. Adjust as necessary.
	No gas at main burners	1. Check gas line for air. Purge as necessary. NOTE: After purging gas line of air, wait at least 5 minutes for any gas to dissipate before attempting to light unit. 2. Check gas valve.
	Inducer pressure switch not closing	1. Check pressure switch wires, connections, and tubing. Repair or replace if necessary.
Inadequate heating	Dirty air filter	Clean or replace filter as necessary
	Gas input to unit too low	Check gas pressure at manifold match with that on unit nameplate
	Unit undersized for application	Replace with proper unit or add additional unit
	Restricted airflow	Clean or replace filter. Remove any restriction.
	Limit switch cycles main burners	Check rotation of blower, temperature rise of unit. Adjust as necessary.
Poor flame characteristics	Incomplete combustion results in: Aldehyde odors, carbon monoxide, sooting flame, floating flame	1. Tighten all screws around burner compartment 2. Cracked heat exchanger. Replace. 3. Unit over-fired. Reduce input (change orifices or adjust gas line or manifold pressure). 4. Check burner alignment. 5. Inspect heat exchanger for blockage. Clean as necessary.

START-UP CHECKLIST
(Remove and Store in Job File)

I. Preliminary Information

MODEL NO.:_____

SERIAL NO.:_____

DATE:_____

TECHNICIAN:_____

II. PRE-START-UP (Insert checkmark in box as each item is completed)

( ) VERIFY THAT ALL PACKING MATERIALS HAVE BEEN REMOVED FROM UNIT

( ) REMOVE ALL SHIPPING HOLD DOWN BOLTS AND BRACKETS PER INSTALLATION INSTRUCTIONS

( ) CHECK ALL ELECTRICAL CONNECTIONS AND TERMINALS FOR TIGHTNESS

( ) CHECK GAS PIPING FOR LEAKS (WHERE APPLICABLE)

( ) CHECK THAT INDOOR (EVAPORATOR) AIR FILTER IS CLEAN AND IN PLACE

( ) VERIFY THAT UNIT INSTALLATION IS LEVEL

( ) CHECK FAN WHEEL, AND PROPELLER FOR LOCATION IN HOUSING/ORIFICE AND SETSCREW TIGHTNESS

( ) MAKE SURE THAT - (If Applicable) ON 060 SIZE PURON HEATPUMP ONLY, THE TWO WIRE TIES FASTEN TO THE OUTDOOR COILS AND REVERSING VALVE/ACCUMULATOR HAVE BEEN REMOVED

III. START-UP

ELECTRICAL

SUPPLY VOLTAGE _____

COMPRESSOR AMPS_____

INDOOR (EVAPORATOR) FAN AMPS_____

TEMPERATURES

OUTDOOR (CONDENSER) AIR TEMPERATURE _____DB

RETURN-AIR TEMPERATURE _____DB _____WB

COOLING SUPPLY AIR _____DB _____WB

GAS HEAT SUPPLY AIR _____

PRESSURES

GAS INLET PRESSURE _____ IN.WG

GAS MANIFOLD PRESSURE _____ IN.WG

REFRIGERANT SUCTION _____PSIG SUCTION LINE TEMP*_____

REFRIGERANT DISCHARGE _____PSIG DISCHARGE TEMP†_____

( ) VERIFY REFRIGERANT CHARGE USING CHARGING CHARTS

GAS HEAT TEMPERATURE RISE

TEMPERATURE RISE (See Literature) RANGE _____

MEASURED TEMPERATURE RISE_____

( ) VERIFY THAT CONDENSATE CONNECTION IS INSTALLED PROPERLY

( ) VERIFY THAT OUTDOOR AIR THERMISTOR (OAT) IS PROPERLY INSTALLED & CONNECTED

*Measured at suction inlet to compressor

†Measured at liquid line leaving condenser.

Copyright 2006 Carrier Corp. • 7310 W. Morris St. • Indianapolis, IN 46231

Printed in U.S.A. Edition Date: 11/06 Catalog No: 48XT-1SI

Replaces:New

Manufacturer reserves the right to change, at any time, specifications and designs without notice and without obligations.