59SC5B
Comfort™, Single−Stage
35−in. (889 mm) Tall, 4−Way Multipoise
Condensing Gas Furnace

Carrier
turn to the experts

Product Data

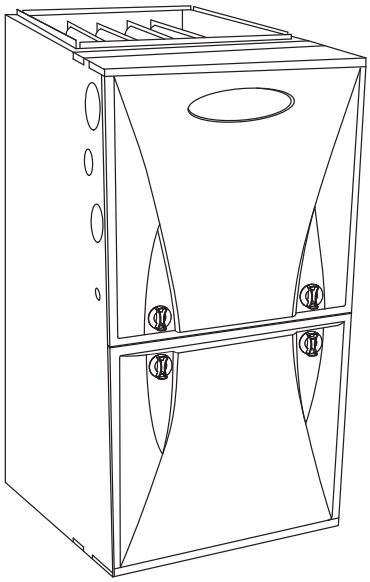

A11263

The 59SC5B Multipoise Comfort™ Condensing Gas Furnace features SEER-boosting year-round electrical efficiency when paired with a compatible condensing unit. Energy efficiency is at the heart of this furnace with up to 96.5% AFUE gas efficiency and the electrically-efficient fixed-speeds, constant torque (FCT) ECM blower motor. This gas furnace also features 4-way multipoise installation flexibility, and is available in ten model sizes. All sizes except the 26,000 BTUH model can be vented for direct vent/two-pipe, ventilated combustion air, or single-pipe applications. The 26,000 BTUH model can use the same 2-pipe venting system using outside air for combustion, but is not considered direct-vent. All sizes are design certified in Canada, and select sizes are certified for mobile/manufactured home use with conversion kit accessory.

PERFORMANCE

- Fixed-speeds, constant torque (FCT) ECM blower motor for electrically efficient operation all year long in heating, cooling and continuous fan operation.
- Single-speed inducer motor, and single-stage gas valve
- Silicon Nitride Power Heat™ Hot Surface Igniter.
- Adjustable blower speed for heating and cooling.
- Aluminized-steel primary heat exchanger.
- Stainless-steel condensing secondary heat exchanger.

INSTALLATION FLEXIBILITY

- 4-way multipoise design for upflow, downflow or horizontal installation, with unique vent elbow and optional through-the-cabinet downflow venting capability.
- Factory-configured ready for upflow applications.
- Ideal height 35” (889 mm) cabinet: short enough for taller coils, but still allows enough room for service.
- Two-pipe venting, single-pipe venting or ventilated combustion air.

APPLICATIONS

- Approved for Twinning applications with accessory kit (060E17-14 through 100E21-20 models, only).
- Approved for Manufactured Housing/Mobile Home applications with MH accessory kit. (040E14-10 through 120E24-22 models, only).
- Propane convertible with gas conversion accessory kit.

CERTIFICATIONS

- All sizes meet ENERGY STAR® Version 4.1 criteria for gas furnaces: 95%+ AFUE.
- Cabinet air leakage less than 2.0% at 1.0 in. W.C. and cabinet air leakage less than 1.4% at 0.5 in. W.C. when tested in accordance with ASHRAE standard 193.
- All sizes meet 40 ng/J NOx emissions. Can be installed in air quality management districts with a 40 ng/J NOx emissions requirement

Comfort SERIES

ENERGY STAR

Certified System ISO 9001 Quality

DESIGN CERTIFIED

CERTIFIED

AHRI CERTIFIED www.ahridirectory.org
Use of the AHRI Certified TM Mark indicates a manufacturer's participation in the program For verification of certification for individual products, go to www.ahridirectory.org.

EASE OF INSTALLATION FACTORY AUTHORIZED PARTS ENGINEERED QUALITY

FURNACE	CASING DIMENSIONS (IN.)			RATED HEATING OUTPUT† BTUH	AFUE		ENERGY STAR®	HEATING AIRFLOW		COOLING CFM @ 0.5 ESP (in. W.C.)	MOTOR HP SPEED - TAPS
	H	D	W		UPFLOW/ HORIZON-TAL	DOWN-FLOW		HEATING CFM‡	HEATING ESP (in. W.C.)		
59SC5B026E14--10	35	29.50	14.20	25,000	96.0%	95.0%	YES	605	0.10	895	1/3 - 5
59SC5B040E14--10	35	29.50	14.20	39,000	96.0%	95.0%	YES	695	0.10	950	1/2 - 5
59SC5B040E17--12	35	29.50	17.50	39,000	96.5%	95.0%	YES	650	0.10	1010	1/2 - 5
59SC5B060E14--12	35	29.50	14.20	58,000	95.0%	95.0%	YES	930	0.12	1120	1/2 - 5
59SC5B060E17--14	35	29.50	17.50	58,000	96.5%	95.0%	YES	1010	0.12	1330	3/4 - 5
59SC5B080E17--16	35	29.50	17.50	78,000	96.5%	95.0%	YES	1325	0.12	1665	3/4 - 5
59SC5B080E21--20	35	29.50	17.50	78,000	96.5%	95.0%	YES	1330	0.12	1855	1 - 5
59SC5B100E21--20	35	29.50	21.00	97,000	96.3%	95.0%	YES	1730	0.15	2125	1 - 5
59SC5B120E24--22	35	29.50	24.00	116,000	96.1%	95.0%	YES	2020	0.20	2105	1 - 5
59SC5B140E24--22	35	29.50	24.00	135,000	95.0%	95.0%	YES	2130	0.20	2310	1 - 5

† Capacity in accordance with DOE test procedures. Ratings are position dependent. See rating plate.
‡ Heating CFM at factory default blower motor heating tap settings.
ESP – External Static Pressure

FEATURES AND BENEFITS

HYBRID HEAT® Dual Fuel System — This system can provide more control over your monthly energy bills by automatically selecting the most economical method of heating. With HYBRID HEAT components, our system automatically switches between the gas furnace and the electric heat pump as outside temperatures change to maintain greater efficiency and comfort than with any traditional single-source heating system. The heat pump also delivers high-efficiency cooling in the summer.

Power Heat™ Igniter — Carrier's unique SiN igniter is not only physically robust but it is also electrically robust. It is capable of running at line voltage and does not require complex voltage regulators as do other brands. This unique feature further enhances the gas furnace reliability and continues Carrier's tradition of technology leadership and innovation in providing a reliable and durable product.

Comfort™ ECM Blower Motor — This basic ECM, or electronically commutated motor, can provide an efficiency enhancement for select Carrier air conditioner or heat pump systems. It uses less electrical power than its PSC counterpart and also has a wider range of speeds

Reliable Heat Exchanger Design — The aluminized steel, clam shell primary heat exchanger was re-engineered to achieve greater efficiency out of a smaller size. The first two passes of the heat exchanger are based on the current 80% product, a design with more than ten years of field-proven performance and success. These innovations, paired with the continuation of a crimped, no-weld seam create an efficient, robust design for this essential component.

The condensing heat exchanger, a stainless steel fin and tube design, is positioned in the furnace to extract additional heat. Stainless steel coupling box componentry between heat exchangers has exceptional corrosion resistance in both natural gas and propane applications.

Media Filter Cabinet — Enhanced indoor air quality in the home is made easier with our media filter cabinet—accessory (purchased separately). When installed as a part of the system, this cabinet allows for easy and convenient addition of a Carrier high efficiency air filter.

4-Way Multipoise Design — One model for all applications – there is no need to stock special downflow or horizontal models when one unit will do it all.

Direct or Single-pipe Venting, or Optional Ventilated Combustion Air — All sizes except the 26,000 BTUH model can be vented for direct vent/two-pipe, ventilated combustion air, or single-pipe applications. The 26,000 BTUH model can use the same 2-pipe venting system using outside air for combustion, but is not considered direct-vent.

Sealed Combustion System — This furnace brings in combustion air from outside the furnace, which results in especially quiet operation. By sealing the entire combustion vestibule, the entire furnace can be made quieter, not just the burners.

Insulated Casing — Foil-faced insulation in the heat exchanger section of the casing minimizes heat loss.

Monoport Burners — The burners are specially designed and finely tuned for smooth, quiet combustion and economical operation.

Bottom Closure — Factory-installed for side return; easily removable for bottom return. The multi-use bottom closure can also serve for roll-out protection in horizontal applications, and act as the bottom closure for the optional return air base accessory.

Blower Access Panel Switch — Automatically shuts off 115-v power to furnace whenever blower access panel is opened.

Quality Registration — Our furnaces are engineered and manufactured under a quality management system registered to ISO 9001.

SPECIFICATIONS

The furnace should be sized to provide 100 percent of the design heating load requirement plus any margin that occurs because of furnace model size capacity increments. None of the furnace model sizes can be used if the heating load is 12,000 BTUH or lower. Use Air Conditioning Contractors of America (Manual J and S); American Society of Heating, Refrigerating, and Air-Conditioning Engineers; or other approved engineering method to calculate heating load estimates and select the furnace. Excessive oversizing of the furnace may cause the furnace and/or vent to fail prematurely, customer discomfort and/or vent freezing.

Failure to follow these guidelines is considered faulty installation and/or misapplication of the furnace; and resulting failure, damage, or repairs may impact warranty coverage.

Heating Capacity and Efficiency		026E14--10	040E14--10	040E17--12	060E14--12	060E17--14	080E17--16	080E21--20	100E21--20	120E24--22	140E24--22
Input	High Heat (BTUH)	26,000	40,000	40,000	60,000	60,000	80,000	80,000	100,000	120,000	140,000
Output	High Heat (BTUH)	25,000	39,000	39,000	58,000	58,000	78,000	78,000	97,000	117,000	135,000
Certified Temperature Rise Range ºF (ºC)	High Heat	25 - 55 (14 - 31)	40 - 70 (22 - 39)	40 - 70 (22 - 39)	45 - 75 (25 - 42)	40 - 70 (22 - 39)	40 - 70 (22 - 39)	40 - 70 (22 - 39)	40 - 70 (22 - 39)	40 - 70 (22 - 39)	45 - 75 (25 - 42)
Airflow Capacity and Blower Data											
Rated External Static Pressure (in. w.c.)	Heating	0.10	0.10	0.10	0.12	0.12	0.12	0.12	0.15	0.20	0.20
	Cooling	0.50	0.50	0.50	0.50	0.50	0.50	0.50	0.50	0.50	0.50
Airflow Delivery @ Rated ESP (CFM)	High Heat	605	695	650	930	1010	1325	1330	1730	2020	2130
	Cooling	895	950	1010	1120	1330	1665	1855	2125	2105	2310
Cooling Capacity (tons) @ CFM/ton	400 CFM/ton	2	2	2.50	2.50	3.50	4	5	5	5	5
	350 CFM/ton	2.50	2.50	3	3	4	4.50	5.50	6	6	6
Direct-Drive Motor Type		Electronically Commutated Motor (ECM)									
Direct-Drive Motor HP		1/3	1/2	1/2	1/2	3/4	3/4	1	1	1	1
Motor Full Load Amps		4.4	6.3	6.8	6.3	8.8	9.2	11.5	11.7	11.5	11.7
RPM Range		400 - 1200	600 - 2000	400 - 1200	600 - 2000	400 - 1200	400 - 1200	400 - 1200	400 - 1200	400 - 1200	400 - 1200
Speed Selections		5	5	5	5	5	5	5	5	5	5
Blower Wheel Dia x Width	in.	11 x 7	11 x 7	11 x 8	11 x 7	11 x 8	11 x 8	11 x 10	11 x 10	11 x 11	11 x 11
Air Filtration System		Field Supplied Filter									
Filter Used for Certified Watt Data		KGAWF**06UFR									
Electrical Data											
Input Voltage	Volts-Hertz-Phase	115-60-1									
Operating Voltage Range	Min-Max	104-127									
Maximum Input Amps	Amps	5.1	7.0	7.5	7.1	9.6	10	12.3	12.6	12.4	12.6
Unit Ampacity	Amps	7.3	9.7	10.3	9.8	12.9	13.4	16.3	16.7	16.4	16.7
Minimum Wire Size	AWG	14	14	14	14	14	14	12	12	12	12
Maximum Wire Length@ Minimum Wire Size	Feet	50	38	36	38	28	27	35	34	35	34
	(M)	(15.5)	(11.7)	(10.9)	(11.5)	(8.7)	(8.4)	(10.7)	(10.5)	(10.7)	(10.5)
Maximum Fuse/Ckt Bkr (Time-Delay Type Rec-ommended)	Amps	15	15	15	15	15	15	20	20	20	20
Transfomer Capacity (24vac output)		40 VA									
External Control Power Available	Heating	27.9 VA									
	Cooling	34.6 VA									
Controls											
Gas Connection Size		1/2" - NPT									
Burners (Monoport)		2	2	2	3	3	4	4	5	6	7
Gas Valve (Redundant)	Manufacturer	White Rodgers									
Minimum Inlet Gas pressure (in. wc)		4.50									
Maximum Inlet Gas pressure (in. wc)		13.60									
Manufactured (Mobile) Home Kit		See Accessory Listing									
Ignition Device		Silicon Nitride									
Heating Blower Control (Heating Off-Delay)		Adjustable: 90, 120, 150, 180 seconds									
Cooling Blower Control (Time Delay Relay)		90 seconds									
Communication System		*none*									
Thermostat Connections		Com 24V, R, W, G, Y									
Accessory Connections		EAC (115vac); HUM (24vac); 1-stg AC (via Y)									

MODEL NUMBER NOMENCLATURE

1, 2 Gas Furnace	3 Heating Stages	4 Tier	5 Min. AFUE/NOx	6 Major Series	7, 8, 9 Heating Input	10 Motor Type	11, 12 Width	13 Voltage (1-phase)	14 Minor Series	15, 16 Airflow
59	M	N	7	B	060	E	17	1	1	16
58 = 80% Non-Condensing 59 = 90%+ Condensing	M = Modulating S = Single Stage T = Two Stage	B = Base C = Comfort E = Export N = Infinity P = Performance U = Ultra Low Nox	0 = Std. NOx 80% 1 = 80% Low Nox --- 2 = 92% 5 = 95% 6 = 96% 7 = 97% 8 = 98%	A B C ---	026 = 26,000 BTU 040 = 40,000 BTU 060 = 60,000 BTU --- 155 = 155,000 BTU	C = Comm. Variable-Speed Constant Airflow (VCA) ECM E= Fixed-Speeds Constant Torque (FCT) ECM V = Variable-Speed Constant Torque (VCT) ECM	14 - 14.2" 17 - 17.5" 21 - 21.0" 24 - 24.5"	1 = 110V/60Hz 2 = 230V/50Hz	1 2 3 ---	08 = 800 CFM 10 = 1000 CFM 12 =1200 CFM 14 = 1400 CFM 16 = 1600 CFM 20 = 2000 CFM 22 = 2200 CFM

A190041

For California Residents:
For installation in SCAQMD only: This furnace does not meet the SCAQMD Rule 1111 14 ng/J NOx emission limit, and thus is subject to a mitigation fee of up to $450. This furnace is not eligible for the Clean Air Furnace Rebate Program: www.CleanAirFurnaceRebate.com

FURNACE COMPONENTS

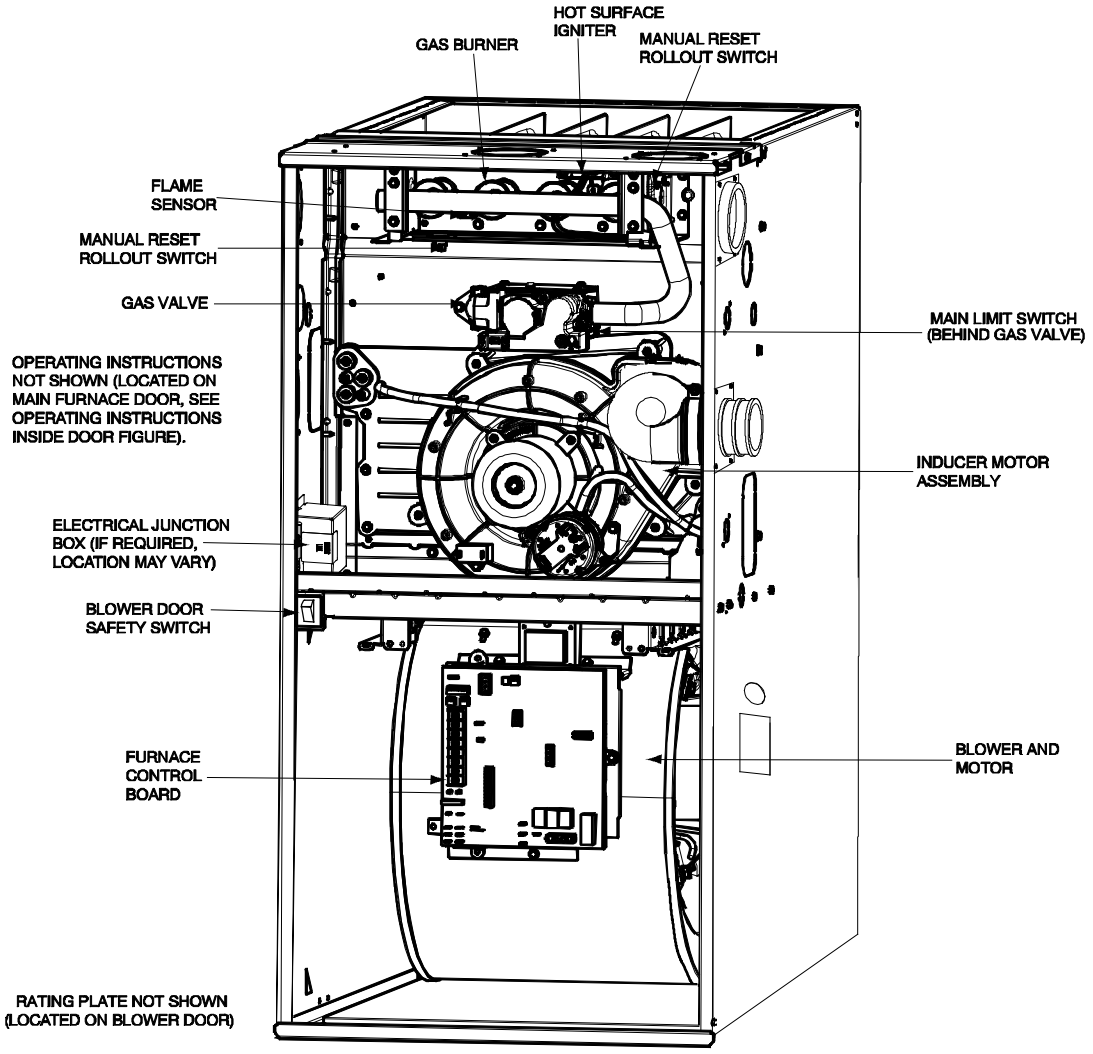

A190145

ACCESSORIES

DESCRIPTION	PART NUMBER	026E14--10	040E14--10	040E17--12	060E14--12	060E17--14
Vent Kit - Through the Cabinet	KGADC0101BVC	●	●	●	●	●
Vent Terminal - Concentric - 2” (51 mm)	KGAVT0701CVT	See Venting Tables				
Vent Terminal - Concentric - 3” (76 mm)	KGAVT0801CVT					
Vent Terminal Bracket - 2” (51 mm)	KGAVT0101BRA					
Vent Terminal Bracket - 3” (76 mm)	KGAVT0201BRA					
Vent Kit – Rubber Coupling	KGAAC0101RVC					
Freeze Protect Kit - Condensate Drain Line Tape	KGAHT0101CFP	●	●	●	●	●
Freeze Protect Kit - Condensate Trap with Heat Pad	KGAHT0201CFP	●	●	●	●	●
CPVC to PVC Drain Adapters - 1/2” CPVC to 3/4” PVC	KGAAD0110PVC	●	●	●	●	●
Horizontal Trap Grommet - Direct Vent	KGACK0101HCK	All 2–Pipe Horizontal				
Condensate Neutralizer Kit	P908–0001	●	●	●	●	●
External Trap Kit	KGBET0201ETK	●	●	●	●	●
Downflow Furnace Base Kit for Combustible Floors	KGASB0201ALL	●	●	●	●	●
Coil Adapter Kits – No Offset	KGADA0101ALL	●	●	●	●	●
Coil Adapter Kits – Single Offset	KGADA0201ALL	●	●	●	●	●
Coil Adapter Kits – Double Offset	KGADA0301ALL	●	●	●	●	●
Return Air Base (Upflow Applications) 14.0–in. wide	KGARP0301B14	●	●		●	
Return Air Base (Upflow Applications) 17.5–in. wide	KGARP0301B17			●		●
IAQ Device Duct Adapters 20.0–in. IAQ to 16 in. Side Return	KGAAD0101MEC	20”x25” IAQ Devices				
IAQ Device Duct Adapters 24.0–in. IAQ to 16 in. Side Return	KGAAD0201MEC	24”x25” IAQ Devices				
Mobile Home Kit	KGCMH0601KIT		●	●	●	●
Gas Conversion Kit - Nat to LP	AGAGC9NPL01A	●				
Gas Conversion Kit - LP to Nat	AGAGC9PNL01A	●				
Gas Conversion Kit - Nat to LP	AGAGC9NPS01A		●	●	●	●
Gas Conversion Kit - LP to Nat	AGAGC9PNS01A		●	●	●	●
Gas Valve Tower Port Adapter Kit	92–1003	●	●	●	●	●
Twinning Kit	AGATWNDTE01A					●
Blower Speed Tap Jumper Kit (10 piece)	AGABLRJMP10A	●	●	●	●	●
Bottom Filter Rack – 14 3/16 inches (360 mm)	KGBFR0401B14	●	●		●	
Bottom Filter Rack – 17.5 inches (455 mm)	KGBFR0501B17			●		●
Filter Pack (6 pack) – Washable - 16x25x1 (406x635x25 mm)	KGAWF1306UFR	●	●	●	●	●

● = Used with the model furnace

DESCRIPTION	PART NUMBER	080E17--16	080E21--20	100E21--20	120E24--22	140E24--22
Vent Kit - Through the Cabinet	KGADC0101BVC	●	●	●	●	●
Vent Terminal - Concentric - 2” (51 mm)	KGAVT0701CVT	See Venting Tables				
Vent Terminal - Concentric - 3” (76 mm)	KGAVT0801CVT					
Vent Terminal Bracket - 2” (51 mm)	KGAVT0101BRA					
Vent Terminal Bracket - 3” (76 mm)	KGAVT0201BRA					
Vent Kit – Rubber Coupling	KGAAC0101RVC					
Freeze Protect Kit - Condensate Drain Line Tape	KGAHT0101CFP	●	●	●	●	●
Freeze Protect Kit - Condensate Trap with Heat Pad	KGAHT0201CFP	●	●	●	●	●
CPVC to PVC Drain Adapters - 1/2” CPVC to 3/4” PVC	KGAAD0110PVC	●	●	●	●	●
Horizontal Trap Grommet - Direct Vent	KGACK0101HCK	All 2–Pipe Horizontal				
Condensate Neutralizer Kit	P908–0001	●	●	●	●	●
External Trap Kit	KGBET0201ETK	●	●	●	●	●
Downflow Furnace Base Kit for Combustible Floors	KGASB0201ALL	●	●	●	●	●
Coil Adapter Kits – No Offset	KGADA0101ALL	●	●	●	●	●
Coil Adapter Kits – Single Offset	KGADA0201ALL	●	●	●	●	●
Coil Adapter Kits – Double Offset	KGADA0301ALL	●	●	●	●	●
Return Air Base (Upflow Applications) 17.5–in. wide	KGARP0301B17	●				
Return Air Base (Upflow Applications) 21.0–in. wide	KGARP0301B21		●	●		
Return Air Base (Upflow Applications) 24.5–in. wide	KGARP0301B24				●	●
IAQ Device Duct Adapters 20.0–in. IAQ to 16 in. Side Return	KGAAD0101MEC	20”x25” IAQ Devices				
IAQ Device Duct Adapters 24.0–in. IAQ to 16 in. Side Return	KGAAD0201MEC	24”x25” IAQ Devices				
Mobile Home Kit	KGCMH0601KIT	●	●	●	●	
Gas Conversion Kit - Nat to LP	AGAGC9NPS01A	●	●	●	●	●
Gas Conversion Kit - LP to Nat	AGAGC9PNS01A	●	●	●	●	●
Gas Valve Tower Port Adapter Kit	92–1003	●	●	●	●	●
Twinning Kit	AGATWNDTE01A	●	●	●		
Blower Speed Tap Jumper Kit (10 piece)	AGABLRJMP10A	●	●	●	●	●
Bottom Filter Rack – 17.5 inches (455 mm)	KGBFR0501B17	●				
Bottom Filter Rack – 21 inches (533 mm)	KGBFR0601B21		●	●		
Bottom Filter Rack – 24.5 inches (622 mm)	KGBFR0701B24				●	●
Filter Pack (6 pack) – Washable - 16x25x1 (406x635x25 mm)	KGAWF1306UFR	●				
Filter Pack (6 pack) – Washable - 24x25x1 (610x635x25 mm)	KGAWF1506UFR		●	●	●	●

● = Used with the model furnace

ACCESSORIES (CONTINUED)

DESCRIPTION		
Gas Orifice Kit - #42 (Nat Gas)	LH32DB207	See Installation Instructions for model, altitude, and heat value usages.
Gas Orifice Kit - #43 (Nat Gas)	LH32DB202	
Gas Orifice Kit - #44 (Nat Gas)	LH32DB200	
Gas Orifice Kit - #45 (Nat Gas)	LH32DB205	
Gas Orifice Kit - #46 (Nat Gas)	LH32DB208	
Gas Orifice Kit - #47 (Nat Gas)	LH32DB078	
Gas Orifice Kit - #48 (Nat Gas)	LH32DB076	
Gas Orifice Kit - #54 (LP)	LH32DB203	
Gas Orifice Kit - #55 (LP)	LH32DB201	
Gas Orifice Kit - #56 (LP)	LH32DB206	
Gas Orifice Kit - 1.25mm (LP)	LH32DB209	
Gas Orifice Kit - 1.30mm (LP)	LH32DB210	

DESCRIPTION	ACCESSORY
HUMIDIFIER	Model HUM
HEAT RECOVERY VENTILATOR	Model HRV
ENERGY RECOVERY VENTILATOR	Model ERV
UV LIGHTS	Model UVL

Carrier has a wide variety of thermostats for your system, please visit **www.Carrier.com** to see all thermostat and IAQ products.

DESCRIPTION	ACCESSORY	14”	17”	21”	24”
Carrier Carbon Monoxide Alarm (10 pack)	COALMCCNRB02–A10	X	X	X	X
Carrier Infinity Air Purifier - 16x25 (407x635 mm)	DGAPAXX1625	X	X		
Carrier Infinity Air Purifier - 20x25 (508x635 mm)	DGAPAXX2025			X	X
Carrier Infinity Air Purifier Repl. Filter- 16x25 (407x635 mm)	PGAPXCAR1625A02	X	X		
Carrier Infinity Air Purifier Repl. Filter- 20x25 (508x635 mm)	PGAPXCAR2025A02			X	X
Cartridge Media Filter - 16” (407 mm) (MERV 11)	FILXXCAR0116	X	X		
Cartridge Media Filter - 16” (407 mm) (MERV 8)	FILXXCAR0016	X	X		
Cartridge Media Filter - 20” (508 mm) (MERV 8)	FILXXCAR0020			X	
Cartridge Media Filter - 20” (508 mm) (MERV11)	FILXXCAR0120			X	
Cartridge Media Filter - 24” (610 mm) (MERV 8)	FILXXCAR0024				X
Cartridge Media Filter - 24” (610 mm) (MERV11)	FILXXCAR0124				X
EZ Flex Cabinet Side or Bottom – 16”	EZXCAB– –0016	X	X		
EZ Flex Cabinet Side or Bottom – 20”	EZXCAB– –0020			X	X
EZ Flex Replacement Filters 16” MERV 10	EXPXXFIL0016	X	X		
EZ Flex Replacement Filters 16” MERV 13	EXPXXFIL0316	X	X		
EZ Flex Replacement Filters 20” MERV 10	EXPXXFIL0020			X	
EZ Flex Replacement Filters 20” MERV 13	EXPXXFIL0320			X	
EZ Flex Replacement Filters 24” MERV 10	EXPXXFIL0024				X
EZ Flex Replacement Filters 24” MERV 13	EXPXXFIL0324				X
EZ-Flex Filter with End Caps - 16” (407 mm) (MERV 10)	EXPXXUNV0016	X	X		
EZ-Flex Filter with End Caps - 16” (407 mm) (MERV 13)	EXPXXUNV0316	X	X		
EZ-Flex Filter with End Caps - 20” (508 mm) (MERV 10)	EXPXXUNV0020			X	
EZ-Flex Filter with End Caps - 20” (508 mm) (MERV 13)	EXPXXUNV0320			X	
EZ-Flex Filter with End Caps - 24” (610 mm) (MERV 10)	EXPXXUNV0024				X
EZ-Flex Filter with End Caps - 24” (610 mm) (MERV 13)	EXPXXUNV0324				X
Media Filter Cabinet – 20”	FILCABXL0020			X	
Media Filter Cabinet – 24”	FILCABXL0024				X
Media Filter Cabinet –16”	FILCABXL0016	X	X		

AIR DELIVERY - CFM (BOTTOM RETURN WITH FILTER)

UNIT SIZE	WIRE LEAD COLOR	SPEED TAPS [2, 3] (Function)	EXTERNAL STATIC PRESSURE (IN.W.C.)									
			0.1	0.2	0.3	0.4	0.5	0.6	0.7	0.8	0.9	1.0
026E14–10	Black	Cooling. Do not use for heating.	1045	1010	975	935	895	855	810	760	715	670
	Yellow	Alt Cooling or alt Heating	820	770	730	680	630	585	530	480	435	385
	Orange	Alt Cooling or alt Heating	655	600	550	495	435	385	335	265	–	–
	Blue	Heating or alt Cooling	605	545	490	435	375	335	255	–	–	–
	Red	Alt Cooling. Do not use for heating.	480	415	360	305	235	–	–	–	–	–
040E14–10	Gray	Cooling. Do not use for heating.	1050	1025	1000	975	950	920	895	870	845	820
	Yellow	Alt Cooling. Do not use for heating.	920	890	860	830	805	775	745	715	690	660
	Orange	Alt Cooling or alt Heating	735	700	665	630	595	555	525	490	450	415
	Blue	Heating or alt Cooling	695	660	625	590	555	515	480	445	405	370
	Red	Alt Cooling. Do not use for heating.	540	495	455	410	365	320	280	235	–	–
040E17–12	Gray	Cooling. Do not use for heating.	1180	1140	1100	1055	1010	960	915	860	805	735
	Yellow	Alt Cooling. Do not use for heating.	880	845	810	780	745	710	675	640	600	570
	Blue	Heating or alt Cooling	650	610	560	515	470	435	395	360	325	265
	Orange	Alt Cooling. Do not use for heating.	525	460	405	350	320	275	210	–	–	–
	Red	Alt Cooling. Do not use for heating.	515	420	350	310	270	205	–	–	–	–
060E14–12	Gray	Cooling. Do not use for heating.	1225	1200	1175	1145	1120	1095	1065	1040	1015	990
	Yellow	Alt Cooling. Do not use for heating.	1105	1080	1050	1020	990	965	935	905	880	850
	Blue	Heating or alt Cooling	940	910	875	845	810	775	745	710	680	645
	Orange	Alt Cooling or alt Heating	725	690	650	610	570	530	490	445	405	365
	Red	Alt Cooling. Do not use for heating.	545	495	445	395	345	295	245	–	–	–
060E17–14	Gray	Cooling. Do not use for heating.	1475	1445	1405	1370	1330	1290	1255	1215	1175	1140
	Yellow	Alt Cooling or alt Heating	1230	1190	1155	1120	1085	1050	1005	970	925	885
	Orange	Alt Cooling or alt Heating	1070	1030	990	950	920	875	840	800	755	715
	Blue	Heating or alt Cooling	1020	975	940	900	860	820	775	740	690	650
	Red	Alt Cooling. Do not use for heating.	700	590	535	485	460	390	340	300	275	210
080E17–16	Gray	Cooling. Do not use for heating.	1820	1790	1755	1710	1665	1620	1570	1525	1480	1435
	Yellow	Alt Cooling or alt Heating	1455	1420	1380	1345	1310	1275	1240	1205	1170	1135
	Blue	Heating or alt Cooling	1335	1295	1260	1220	1185	1150	1110	1075	1040	1005
	Orange	Alt Cooling or alt Heating	1110	1065	1020	980	935	895	850	810	770	725
	Red	Alt Cooling. Do not use for heating.	425	335	240	–	–	–	–	–	–	–
080E21–20	Gray	Cooling. Do not use for heating.	2045	1995	1950	1900	1855	1805	1760	1710	1660	1615
	Yellow	Alt Cooling. Do not use for heating.	1665	1625	1575	1530	1480	1435	1385	1340	1285	1240
	Orange	Alt Cooling or alt Heating	1475	1420	1370	1320	1270	1220	1170	1125	1070	1025
	Blue	Heating or alt Cooling	1345	1290	1235	1180	1130	1080	1025	975	935	885
	Red	Alt Cooling. Do not use for heating.	1155	1080	1015	960	895	845	790	735	675	620
100E21–20	Gray	Cooling. Do not use for heating.	2280	2240	2200	2165	2125	2085	2020	1910	1795	1665
	Yellow	Alt Cooling. Do not use for heating.	1860	1815	1775	1730	1690	1645	1605	1560	1515	1465
	Blue	Heating or alt Cooling	1755	1710	1665	1620	1580	1535	1485	1440	1390	1340
	Orange	Alt Cooling or alt Heating	1530	1480	1425	1380	1325	1275	1215	1160	1110	1060
	Red	Cooling. Do not use for heating.	1340	1285	1230	1170	1110	1050	990	930	875	820
120E24–22	Gray	Cooling. Do not use for heating.	2310	2255	2205	2155	2105	2055	2005	1955	1910	1885
	Blue	Heating or alt Cooling	2065	2020	1970	1915	1860	1805	1740	1690	1635	1580
	Yellow	Alt Cooling or alt Heating	1850	1800	1745	1690	1640	1585	1530	1475	1420	1360
	Orange	Alt Cooling. Do not use for heating.	1500	1440	1380	1320	1260	1205	1145	1085	1035	955
	Red	Alt Cooling. Do not use for heating.	1070	960	875	805	710	630	560	490	420	355
140E24–22	Gray	Cooling. Do not use for heating.	2505	2465	2425	2370	2310	2250	2180	2090	1955	1810
	Blue	Heating or alt Cooling	2180	2130	2085	2035	1990	1945	1900	1850	1800	1755
	Yellow	Alt Cooling or alt Heating	1910	1855	1810	1760	1705	1655	1605	1555	1505	1460
	Orange	Alt Cooling. Do not use for heating.	1560	1505	1445	1380	1325	1265	1210	1155	1100	1040
	Red	Alt Cooling. Do not use for heating.	855	760	665	565	470	385	305	–	–	–

NOTE:

1. A filter is required for each return–air inlet. Airflow performance includes a 3/4–in. (19 mm) washable filter media such as contained in a factory–authorized accessory filter rack. See accessory list. To determine airflow performance without this filter, assume an additional 0.1 in. w.c. available external static pressure.
2. **ADJUST THE BLOWER SPEED TAPS AS NECESSARY FOR THE PROPER AIR TEMPERATURE RISE FOR EACH INSTALLATION.**
3. The "Function" column identifies which speed taps can be used for heating.
4. If the same motor speed tap is needed for heating and cooling, a Jumper Wire accessory kit is available, see Product Data accessories for the current Jumper Wire accessory part number. Reference the "Start–up, Adjustments, and Safety Check" section of installation instructions for further Jumper Wire instructions.
5. Airflows over 1800 CFM require bottom return, two–side return, or bottom and side return. A minimum filter size of 20" x 25" (508 x 635 mm) is required.
6. For upflow applications, air entering from one side into both the side of the furnace and a return air base counts as a side and bottom return.
7. The "–" entry indicates an unstable operating condition.

MAXIMUM ALLOWABLE EXPOSED VENT LENGTH IN UNCONDITIONED SPACE - FT.

Winter Design Temp °F	Unit Size	26,000* BTUH					
		0" Insulation		3/8" Insulation		1/2" Insulation	
	Pipe Dia. In.	1½	2	1½	2	1½	2
	20	20	20	50	45	60	50
	0	5	5	25	20	30	25
	−20			15	10	20	15
	−40			10	5	15	10

Winter Design Temp °F	Unit Size	40,000* BTUH									60,000 BTUH											
		Uninsulated			3/8-in. Insulation			1/2-in. Insulation			Uninsulated				3/8-in. Insulation				1/2-in. Insulation			
	Pipe Dia. in.	1 ½	2	2 ½	1 ½	2	2 ½	1 ½	2	2 ½	1 ½	2	2 ½	3	1 ½	2	2 ½	3	1 ½	2	2 ½	3
	20	20	20	20	20	50	45	20	60	50	20	30	30	25	20	75	65	60	20	85	75	65
	0	10	5	5	20	25	20	20	30	25	15	15	10	10	20	40	30	25	20	45	40	30
	-20	5			20	15	10	20	20	15	10	5			20	25	20	15	20	30	25	20
	-40				15	10	5	15	15	10	5				20	15	15	10	20	20	15	10

Winter Design Temp °F	Unit Size	80,000 BTUH														
		Uninsulated					3/8-in. Insulation					1/2-in. Insulation				
	Pipe Dia. in.	1 ½	2	2 ½	3	4	1 ½	2	2 ½	3	4	1 ½	2	2 ½	3	4
	20	15	40	40	35	30	15	50	90	75	65	15	50	70	70	70
	0	15	20	15	10	5	15	50	45	35	30	15	50	50	40	35
	-20	15	10	5			15	35	30	20	15	15	40	30	25	15
	-40	10	5				15	25	20	15	5	15	30	25	20	10

Winter Design Temp °F	Unit Size	100,000 BTUH											
		Uninsulated				3/8-in. Insulation				1/2-in. Insulation			
	Pipe Dia. in.	2	2 ½	3	4	2	2 ½	3	4	2	2 ½	3	4
	20	20	50	40	35	20	80	95	80	20	80	105	90
	0	20	20	15	10	20	55	45	35	20	65	55	45
	-20	15	10	5		20	35	30	20	20	45	35	25
	-40	10	5			20	25	20	10	20	30	25	15

Winter Design Temp °F	Unit Size	120,000 BTUH									140,000* BTUH								
		Uninsulated			3/8-in. Insulation			1/2-in. Insulation			Uninsulated			3/8-in. Insulation			1/2-in. Insulation		
	Pipe Dia. in.	2 ½	3	4	2 ½	3	4	2 ½	3	4	2 ½	3	4	2 ½	3	4	2 ½	3	4
	20	10	50	40	10	75	95	10	75	105	5	55	50	5	65	105	5	65	125
	0	10	20	15	10	55	45	10	65	50	5	25	15	5	65	50	5	65	60
	−20	10	10		10	35	25	10	45	30	5	10	5	5	45	30	5	50	40
	−40	10	5		10	25	15	10	30	20	5	5		5	30	20	5	35	25

* Not all model families have these sizes

MAXIMUM ALLOWABLE EXPOSED VENT LENGTH IN UNCONDITIONED SPACE - METERS

Winter Design Temp °C	Unit Size	26,000* BTUH					
		0" Insulation		3/8" Insulation		1/2" Insulation	
	Pipe Dia. mm	38	51	38	51	38	51
	−7	6.1	6.1	15.2	13.7	18.3	15.2
	−18	1.5	1.5	7.6	6.1	9.1	7.6
	−29			4.6	3.0	6.1	4.6
	−40			3.0	1.5	4.6	3.0

Winter Design Temp °C	Unit Size	40,000* BTUH									60,000 BTUH											
		Uninsulated			3/8-in. Insulation			1/2-in. Insulation			Uninsulated				3/8-in. Insulation				1/2-in. Insulation			
	Pipe Dia. mm	38	51	64	38	51	64	38	51	64	38	51	64	76	38	51	64	76	38	51	64	76
	−7	6.1	6.1	6.1	6.1	15.2	13.7	6.1	18.3	15.2	6.1	9.1	9.1	7.6	6.1	22.9	19.8	18.3	6.1	25.9	22.9	19.8
	−18	3.0	1.5	1.5	6.1	7.6	6.1	6.1	9.1	7.6	4.6	4.6	3.0	3.0	6.1	12.2	9.1	7.6	6.1	13.7	12.2	9.1
	−29	1.5			6.1	4.6	3.0	6.1	6.1	4.6	3.0	1.5			6.1	7.6	6.1	4.6	6.1	9.1	7.6	6.1
	−40				4.6	3.0	1.5	4.6	4.6	3.0	1.5				6.1	4.6	4.6	3.0	6.1	6.1	4.6	3.0

Winter Design Temp °C	Unit Size	80,000 BTUH														
		Uninsulated					3/8-in. Insulation					1/2-in. Insulation				
	Pipe Dia. mm	38	51	64	76	102	38	51	64	76	102	38	51	64	76	102
	−7	4.6	12.2	12.2	10.7	9.1	4.6	15.2	27.4	22.9	19.8	4.6	15.2	21.3	21.3	21.3
	−18	4.6	6.1	4.6	3.0	1.5	4.6	15.2	13.7	10.7	9.1	4.6	15.2	15.2	12.2	10.7
	−29	4.6	3.0	1.5			4.6	10.7	9.1	6.1	4.6	4.6	12.2	9.1	7.6	4.6
	−40	3.0	1.5				4.6	7.6	6.1	4.6	1.5	4.6	9.1	7.6	6.1	3.0

Winter Design Temp °C	Unit Size	100,000 BTUH											
		Uninsulated				3/8-in. Insulation				1/2-in. Insulation			
	Pipe Dia. mm	51	64	76	102	51	64	76	102	51	64	76	102
	−7	6.1	15.2	12.2	10.7	6.1	24.4	28.9	24.4	6.1	24.4	32.0	27.4
	−18	6.1	6.1	4.6	3.0	6.1	16.8	13.7	10.7	6.1	19.8	16.7	13.7
	−29	4.6	3.0	1.5		6.1	10.7	9.1	6.1	6.1	13.7	10.7	7.6
	−40	3.0	1.5			6.1	7.6	6.1	3.0	6.1	9.1	7.6	4.6

Winter Design Temp °C	Unit Size	120,000 BTUH									140,000 BTUH*								
		Uninsulated			3/8-in. Insulation			1/2-in. Insulation			Uninsulated			3/8-in. Insulation			1/2-in. Insulation		
	Pipe Dia. mm	64	76	102	64	76	102	64	76	102	64	76	102	64	76	102	64	76	102
	−7	3.0	15.2	12.2	3.0	22.9	28.9	3.0	22.9	32.0	1.5	16.7	15.2	1.5	19.8	32.0	1.5	19.8	38.1
	−18	3.0	6.1	4.6	3.0	16.8	13.7	3.0	19.8	15.2	1.5	7.6	4.6	1.5	19.8	15.2	1.5	19.8	18.3
	−29	3.0	3.0		3.0	10.7	7.6	3.0	13.7	9.1	1.5	3.0	1.5	1.5	13.7	9.1	1.5	15.2	12.2
	-40	3.0	1.5		3.0	7.6	4.6	3.0	9.1	6.1	1.5	1.5		1.5	9.1	6.1	1.5	35	7.6

* Not all model families have these sizes

MAXIMUM EQUIVALENT VENT LENGTH - FT. (M)

Table 1 – Maximum Equivalent Vent Length

NOTE: Maximum Equivalent Vent Length (MEVL) includes standard and concentric vent termination and does NOT include elbows. Use Table 2 - Deductions from Maximum Equivalent Vent Length to determine allowable vent length for each application.

Unit Size		26,000 [2]		40,000 [1]			60,000 [2]				80,000					100,000				120,000			140,000		
Altitude (feet)	Pipe Dia. (in)	1 ½	2	1 ½	2	2 ½	1 ½	2	2 ½	3	1 ½	2	2 ½	3	4	2	2 ½	3	4	2 ½	3	4	2 ½	3	4
	0–2000	70	200	40	155	185	20	100	175	200	15	55	130	175	200	20	80	175	200	10	75	185	5	65	155
	2001–3000	65	190	35	150	175		95	165	185	10	49	125	165	185	15	75	165	185		70	175	N/A	60	140
	3001–4000	60	175	30	135	160	16	90	155	175			115	155	175			155	175	5	65	165			120
	4001–4500	55	160	25	130	155	15	85	150	170		44	110	150	165	10	70		170	N/A	60	160		50	110
	4501–5000				125	145		80	145	165				145	160		65	150	165					45	100
	5001–6000	50	145	20	120	130		75	140	155		41	100	135	150			140	155			155	N/A	35	80
	6001–7000	45	135	15	110	120	13	70	130	145	N/A	38	90	125	140		60	135	145		50	140		30	65
	7001–8000	40	120	10	100	110	10	65	120	135		36		120	125	N/A	55	125	135		46	130		25	45
	8001–9000	35	110		90	95	5	60	115	125		33	80	110	115		50	115	125		43	120		15	30
	9001–10000	30	95	5	80	85	N/A	55	105	115		30	75	100	105		45	100	115		39	115		10	15

Maximum Equivalent Vent Length – Meters

Unit Size		26,000 [2]		40,000 [1]			60,000 [2]				80,000					100,000				120,000			140,000		
Altitude (meters)	Pipe Dia. (mm)	38	51	38	51	64	38	51	64	76	38	51	64	76	102	51	64	76	102	64	76	102	64	76	102
	0–610	21.3	60.9	12.1	47.2	56.3	6.0	30.4	53.3	60.9	4.5	16.7	39.6	53.3	60.9	6.0	24.3	53.3	60.9	3.0	22.8	56.3	1.5	19.8	47.2
	611–914	19.8	57.9	10.6	45.7	53.3		28.9	50.2	56.3	3.0	14.9	38.1	50.2	56.3	4.5	22.8	50.2	56.3		21.3	53.3	NA	18.2	42.6
	915–1219	18.2	53.3	9.1	41.1	48.7	4.8	27.4	47.2	53.3			35.0	47.2	53.3			47.2	53.3	1.5	19.8	50.2			36.5
	1220–1370	16.7	48.7	7.6	39.6	47.2	4.5	25.9	45.7	51.8		13.4	33.5	45.7	50.2	3.0	21.3		51.8	N/A	18.2	48.7		15.2	33.5
	1371–1524				38.1	44.1		24.3	44.1	50.2				44.1	48.7		19.8	45.7	50.2					13.7	30.4
	1525–1829	15.2	44.1	6.0	36.5	39.6		22.8	42.6	47.2		12.4	30.4	41.1	45.7			42.6	47.2			47.2		10.6	24.3
	1830–2134	13.7	41.1	4.5	33.5	36.5	3.9	21.3	39.6	44.1	NA	11.5	27.4	38.1	42.6		18.2	41.1	44.1		15.2	42.6		9.1	19.8
	2135–2438	12.1	36.5	3.0	30.4	33.5	3.0	19.8	36.5	41.1		10.9		36.5	38.1	NA	16.7	38.1	41.1		14.0	39.6		7.6	13.7
	2439–2743	10.6	33.5		27.4	28.9	1.5	18.2	35.0	38.1		10.0	24.3	33.5	35.0		15.2	35.0	38.1		13.1	36.5		4.5	9.1
	2744–3048	9.1	28.9	1.5	24.3	25.9	NA	16.7	32.0	35.0		9.1	22.8	30.4	32.0		13.7	30.4	35.0		11.8	35.0		3.0	4.5

NOTES:

1. Inducer Outlet Restrictor disk (P/N 337683–401; 1.25–in. (32 mm) Dia.) shipped in the loose parts bag or available through Replacement Components required under 10–ft. (3 M) TEVL in all orientations. Required for installations from 0 – 2000 (0 to 610 M) above sea level. Failure to use an outlet restrictor may result in flame disturbances or flame sense lock–out.
2. Inducer Outlet Restrictor disk (P/N 337683–401; 1.25–in. (32 mm) Dia.) shipped in the loose parts bag or available through Replacement Components required for no greater than 5–ft. (1.5 M) TEVL in downflow and horizontal orientations only. Required for installations from 0 – 2000 (0 to 610 M) above sea level.

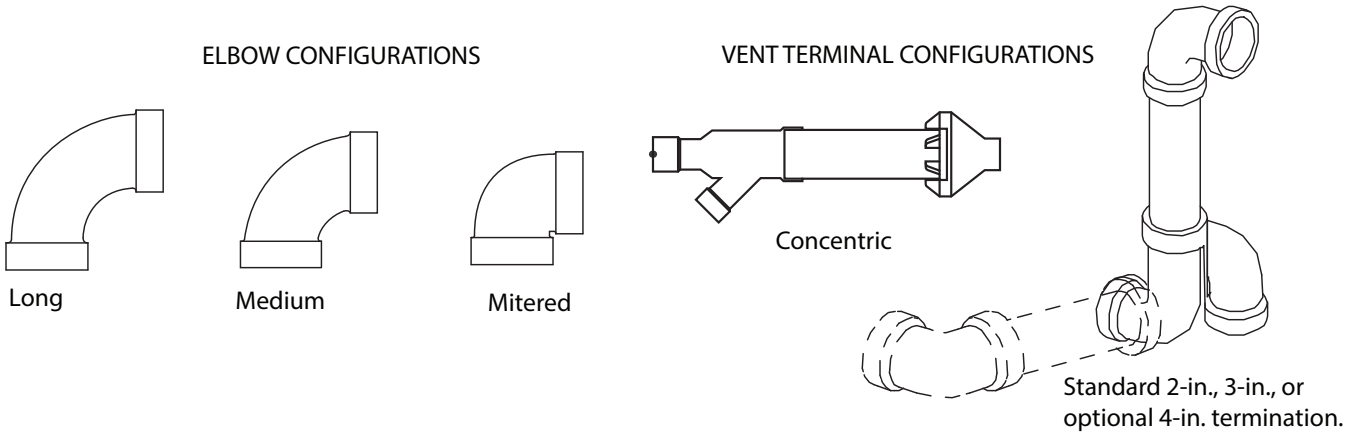

A13110

Table 2 – Deductions from Maximum Equivalent Vent Length - Ft. (M)

Pipe Diameter (in):	1-1/2		2		2-1/2		3		4	
Mitered 90° Elbow	8	(2.4)	8	(2.4)	8	(2.4)	8	(2.4)	8	(2.4)
Medium Radius 90° Elbow	5	(1.5)	5	(1.5)	5	(1.5)	5	(1.5)	5	(1.5)
Long Radius 90° Elbow	3	(0.9)	3	(0.9)	3	(0.9)	3	(0.9)	3	(0.9)
Mitered 45° Elbow	4	(1.2)	4	(1.2)	4	(1.2)	4	(1.2)	4	(1.2)
Medium Radius 45° Elbow	2.5	(0.8)	2.5	(0.8)	2.5	(0.8)	2.5	(0.8)	2.5	(0.8)
Long Radius 45° Elbow	1.5	(0.5)	1.5	(0.5)	1.5	(0.5)	1.5	(0.5)	1.5	(0.5)
Tee	16	(4.9)	16	(4.9)	16	(4.9)	16	(4.9)	16	(4.9)
Concentric Vent Termination	NA		0	(0.0)	NA		0	(0.0)	NA	
Standard Vent Termination	0	(0.0)	0	(0.0)	0	(0.0)	0	(0.0)	0	(0.0)

NOTES:

1. Use only the smallest diameter pipe possible for venting. Over–sizing may cause flame disturbance or excessive vent terminal icing or freeze–up.
2. NA – Not allowed. Pressure switch will not close, or flame disturbance may result.
3. Vent sizing for Canadian installations over 4500 ft. (1370 M) above sea level are subject to acceptance by the local authorities having jurisdiction.
4. Size both the combustion air and vent pipe independently, then use the larger size for both pipes.
5. Assume the two 45° elbows equal one 90° elbow. Wide radius elbows are desirable and may be required in some cases.
6. Elbow and pipe sections within the furnace casing and at the vent termination should not be included in vent length or elbow count.
7. The minimum pipe length is 5 ft. (2 M) linear feet (meters) for all applications.
8. Use 3–in. (76 mm) diameter vent termination kit for installations requiring 4–in. (102 mm) diameter pipe.

Venting System Length Calculations

The Total Equivalent Vent Length (TEVL) for **EACH** combustion air or vent pipe equals the length of the venting system, plus the equivalent length of elbows used in the venting system from Table 2.

Standard vent terminations or factory accessory concentric vent terminations count for zero deduction.

See vent system manufacturer's data for equivalent lengths of flexible vent pipe or other termination systems. **DO NOT ASSUME** that one foot of flexible vent pipe equals one foot of straight PVC/ABS DWV vent pipe.

Compare the Total Equivalent Vent Length to the Maximum Equivalent Vent Lengths in Table 1.

Example 1

A direct-vent 60,000 BTUH furnace installed at 2100 ft. (640M). Venting system includes **FOR EACH PIPE:**
70 feet (22 M) of vent pipe, 65 feet (20 M) of combustion air inlet pipe, (3) 90º long-radius elbows, (2) 45º long-radius elbows, and a factory accessory concentric vent kit.

Can this application use 2" (50 mm ND) PVC/ABS DWV vent piping?

Measure the required linear length of air inlet and vent pipe; insert the longest of the two here					70 ft. (22 M)	Use length of the longer of the vent or air inlet piping system
Add equiv length of (3) 90º long-radius elbows (use the highest number of elbows for either the vent or inlet pipe)	3	x	3 ft. (0.9 M)	=	9 ft. (2.7 M)	From Table 2
Add equiv length of (2) 45º long-radius elbows (use the highest number of elbows for either the vent or inlet pipe)	2	x	1.5 ft. (0.5 M)	=	3 ft. (0.9 M)	From Table 2
Add equiv length of factory concentric vent term					0 ft.	From Table 2
Add correction for flexible vent pipe, if any					0 ft.	From Vent Manufacturer's instructions; zero for PVC/ABS DWV
Total Equivalent Vent Length (TEVL)					82 ft. (25 M)	Add all of the above lines
Maximum Equivalent Vent Length (MEVL)					95 ft. (29 M)	For 2" pipe from Table 1
Is TEVL less than MEVL?					**YES**	**Therefore, 2" pipe MAY be used**

Example 2

A direct-vent 60,000 BTUH furnace installed at 2100 ft. (640M). Venting system includes **FOR EACH PIPE:**
100 feet (30 M) of vent pipe, 95 feet (29 M) of combustion air inlet pipe, (3) 90º long-radius elbows, and a polypropylene concentric vent kit. Also includes 20 feet (6.1 M) of flexible polypropylene vent pipe, included within the 100 feet (30 M) of vent pipe.

VERIFY FROM POLYPROPYLENE VENT MANUFACTURER'S INSTRUCTIONS for the multiplier correction for flexible vent pipe.

Can this application use 60mm o.d. (2") polypropylene vent piping? If not, what size piping can be used?

Measure the required linear length of **RIGID** air inlet and vent pipe; insert the longest of the two here: 100 ft. Of rigid pipe – 20 ft. Of flexible pipe				=	80 ft. (24 M)	Use length of the longer of the vent or air inlet piping system
Add equiv length of (3) 90º long-radius elbows (use the highest number of elbows for either the vent or inlet pipe)	3	x	5 ft. (1.5 M)	=	15 ft. (4.6 M)	Example from polypropylene vent manufacturer's instructions, Verify from vent manufacturer's instructions.
Add equiv length of 45º long-radius elbows (use the highest number of elbows for either the vent or inlet pipe)	0	x		=	0 ft. (0 M)	
Add equiv length of factory concentric vent term	9	x	3.3 ft (0.9 M)	=	30 ft. (9 M)	
Add correction for flexible vent pipe, if any	2*	x	20 ft. (6.1 M)	=	40 ft. (12.2 M)	
* VERIFY FROM VENT MANUFACTURER'S INSTRUCTIONS; For example only, assume 1 meter of flexible 60mm (2") or 80mm (3") polypropylene pipe equals 2.0 meters (6.5 ft.) of PVC/ABS pipe.						
Total Equivalent Vent Length (TEVL)					165 ft. (50 M)	Add all of the above lines
Maximum Equivalent Vent Length (MEVL)					95 ft. (29 M)	For 2" pipe from Table 2
Is TEVL less than MEVL?					**NO**	**Therefore, 60mm (2") pipe may NOT be used; try 80mm (3")**
Maximum Equivalent Vent Length (MEVL)					185 ft. (57 M)	For 3" pipe from Table 2
Is TEVL less than MEVL?					**YES**	**Therefore, 80mm (3") pipe MAY be used**

RETURN AIR TEMPERATURE

This furnace is designed for continuous return-air minimum temperature of 60°F (15°C) db or intermittent operation down to 55°F (13°C) db such as when used with a night setback thermometer. Return-air temperature must not exceed 80°F (27°C) db. Failure to follow these return air limits may affect reliability of heat exchangers, motors and controls.

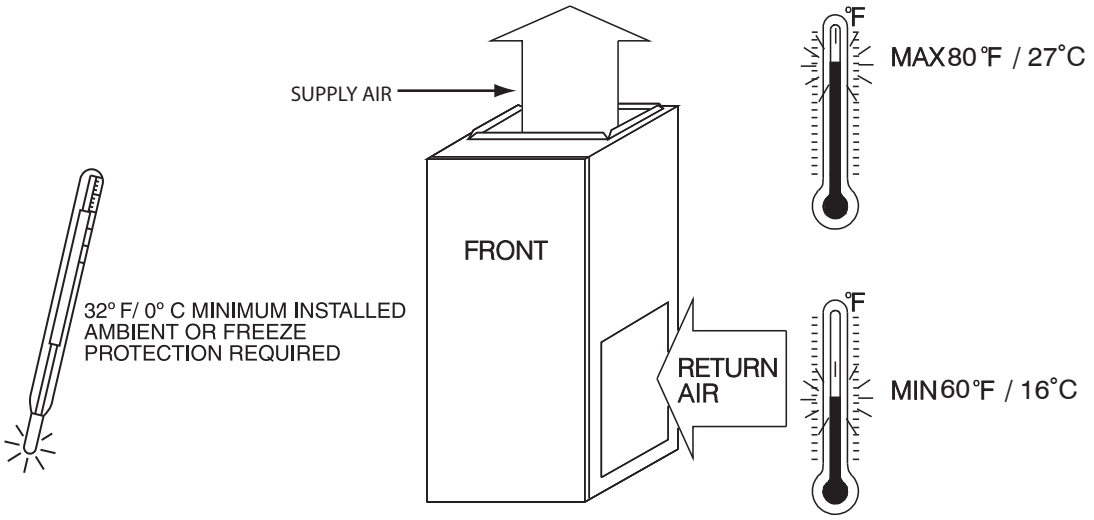

A10490

MINIMUM CLEARANCES TO COMBUSTIBLE MATERIALS

POSITION	CLEARANCE
Rear	0 (0 mm)
Front (Combustion air openings in furnace and in structure)	1 in. (25 mm)
Required for service**	24 in. (610 mm)*
All Sides of Supply Plenum**	1 in. (25 mm)
Sides	0 (0 mm)
Vent	0 (0 mm)
Top of Furnace	1 in. (25 mm)

* Recommended
**Consult your local building codes

COMBUSTION-AIR PIPE FOR NON-DIRECT (1-PIPE) VENT APPLICATION

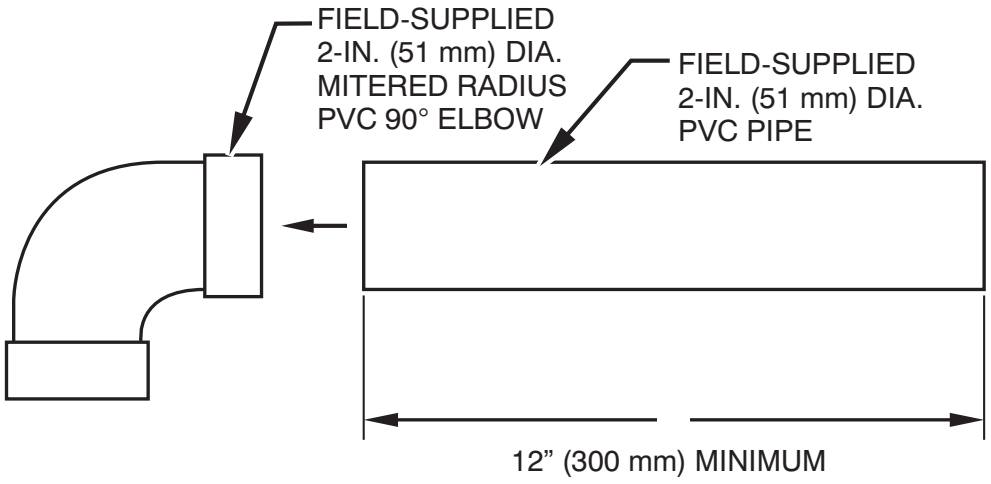

A12376

NOTE: See Installation Instructions for specific venting configurations.

DOWNFLOW SUBBASE

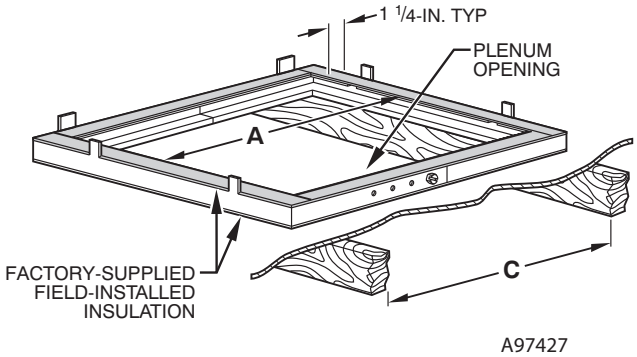

Assembled

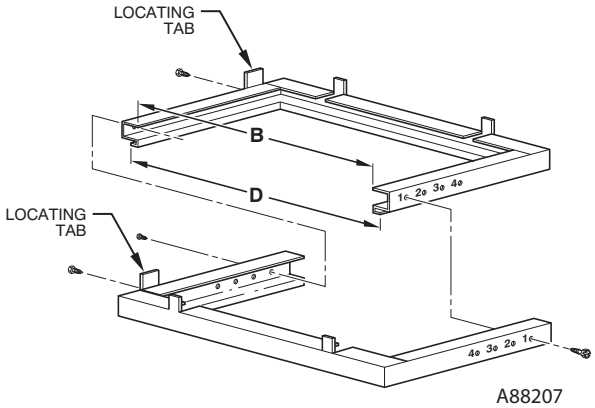

Disassembled

DIMENSIONS (IN. / MM)						
FURNACE CASING WIDTH	FURNACE IN DOWNFLOW APPLICATION	PLENUM OPENING*		FLOOR OPENING		HOLE NO. FOR WIDTH ADJUSTMENT
		A	B	C	D	
14–3/16 (360)	Furnace with or without Cased Coil Assembly or Coil Box	11–3/16 (322)	19 (483)	13–7/16 (341)	20–5/8 (600)	4
17–1/2 (445)	Furnace with or without Cased Coil Assembly or Coil Box	15–1/8 (384)	19 (483)	16–3/4 (426)	20–5/8 (600)	3
21 (533)	Furnace with or without Cased Coil Assembly or Coil Box	18–5/8 (396)	19 (483)	20–1/4 (514)	20–5/8 (600)	2
24–1/2 (622)	Furnace with or without Cased Coil Assembly or Coil Box	22–1/8 (562)	19 (483)	23–3/4 (603)	20–5/8 (600)	1

*The plenum should be constructed 1/4–in. (6 mm) smaller in width and depth than the plenum dimensions shown above.

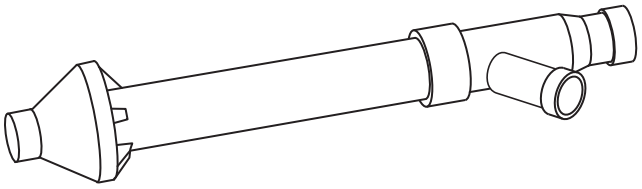

Concentric Vent Kit

A93086

A concentric vent kit allows vent and combustion-air pipes to terminate through a single exit in a roof or side wall. One pipe runs inside the other allowing venting through the inner pipe and combustion air to be drawn in through the outer pipe.

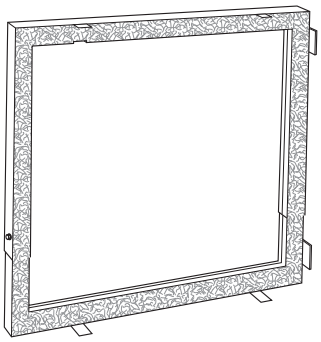

Downflow Subbase

A88202

One base fits all furnace sizes. The base is designed to be installed between the furnace and a combustible floor when no coil box is used or when a coil box other than a Carrier cased coil is used. It is CSA design certified for use with Carrier branded furnaces when installed in downflow applications.

MEDIA FILTER CABINET (OPTIONAL ACCESSORY)

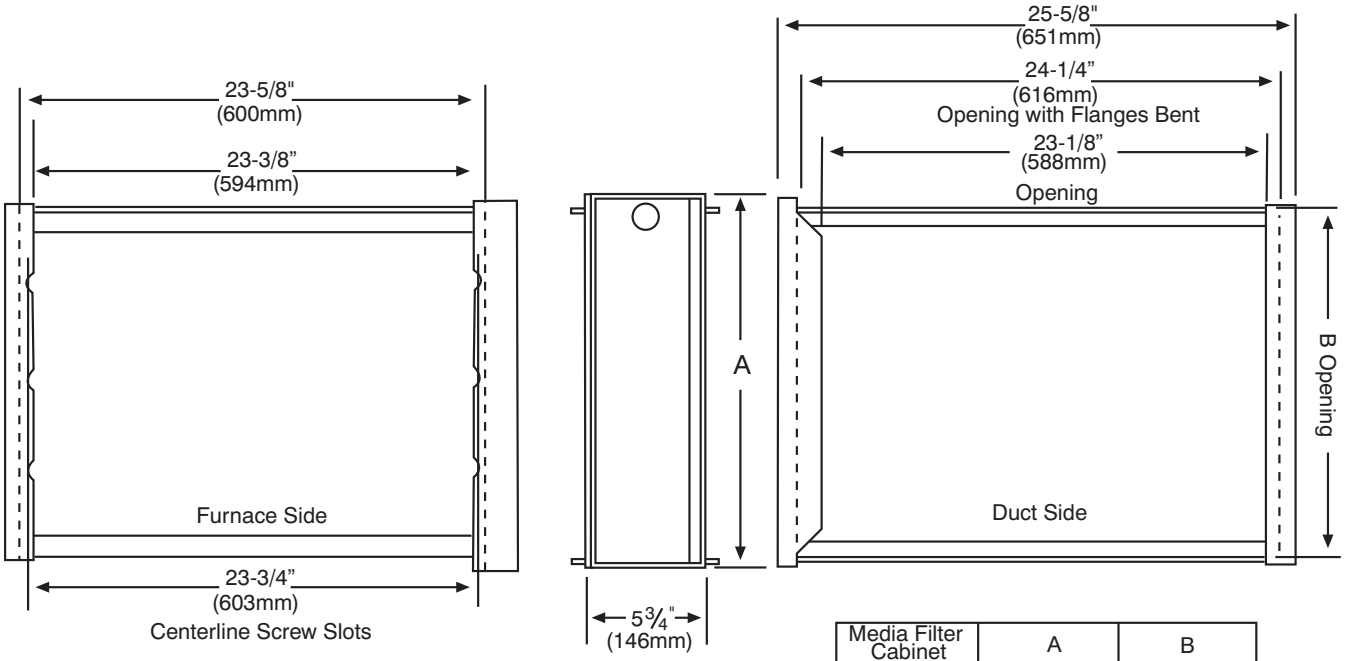

Media Filter Cabinet	A	B
16" (406mm)	17" (432mm)	16" (406mm)
20" (508mm)	21" (533mm)	20" (508mm)
24" (610mm)	25" (635mm)	24" (610mm)

NOTE: Media cabinet is matched to the bottom opening on furnace. May also be used for side return.

A12428

TYPICAL WIRING SCHEMATIC

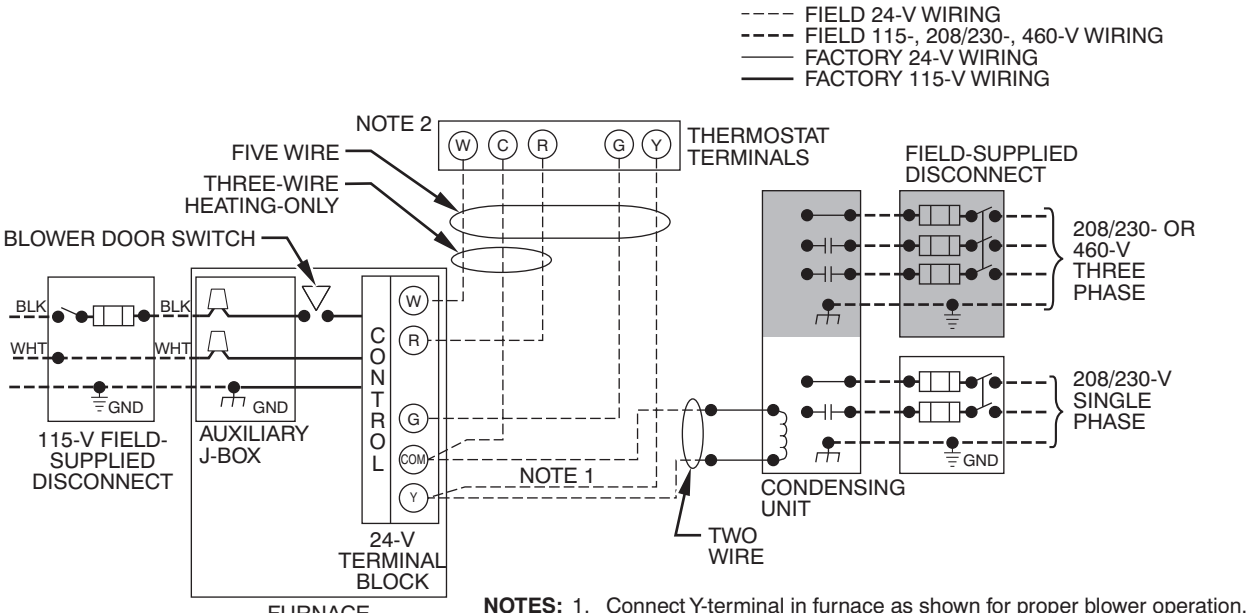

NOTES: 1. Connect Y-terminal in furnace as shown for proper blower operation.
2. Some thermostats require a "C" terminal connection as shown.
3. If any of the original wire, as supplied, must be replaced, use same type or equivalent wire.

A11387

DIMENSIONAL DRAWING

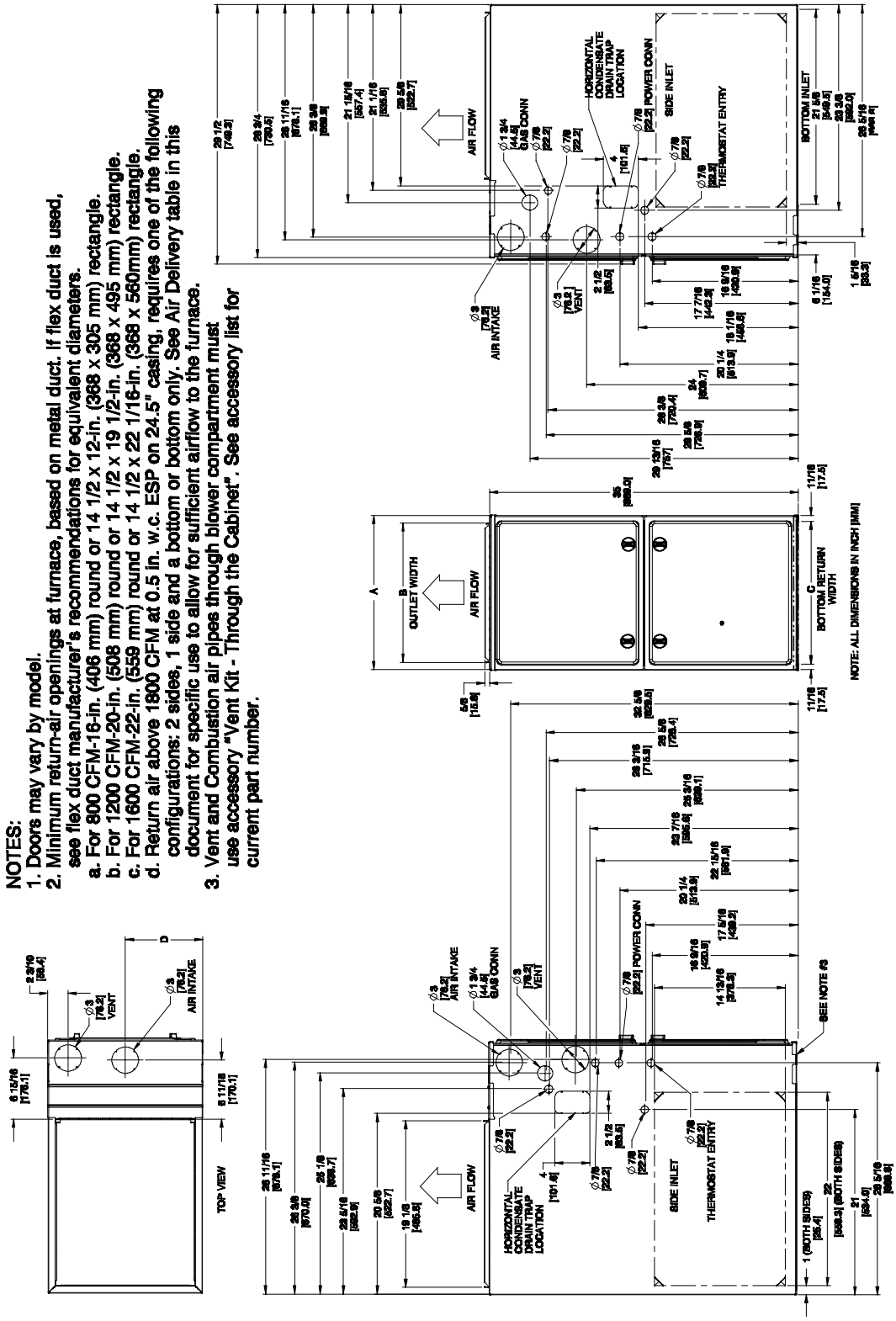

A180203

FURNACE SIZE	A	B	C	D	SHIP WT. LB (KG)
	CABINET WIDTH	OUTLET WIDTH	BOTTOM INLET WIDTH	AIR INTAKE	
026E14–10	14–3/16 (361)	12–1/2 (319)	12–9/16 (322)	7–1/8 (181)	118.0 (53.5)
040E14–10	14–3/16 (361)	12–1/2 (319)	12–9/16 (322)	7–1/8 (181)	120 (54.4)
040E17–12	17–1/2 (445)	15–7/8 (403)	16 (406)	8–3/4 (222)	126.5 (57.4)
060E14–12	14–3/16 (361)	12–1/2 (319)	12–9/16 (322)	7–1/8 (181)	129 (58.5)
060E17–14	17–1/2 (445)	15–7/8 (403)	16 (406)	8–3/4 (222)	138.5 (62.8)
080E17–16	17–1/2 (445)	15–7/8 (403)	16 (406)	8–3/4 (222)	146.5 (66.5)
080E21–20	21 (533)	19–3/8 (492)	19–1/2 (495)	10–1/2 (267)	154.5 (70.1)
100E21–20	21 (533)	19–3/8 (492)	19–1/2 (495)	10–1/2 (267)	164.5 (74.6)
120E24–20	24–1/2 (622)	22–7/8 (581)	23 (584)	12–1/4 (311)	179.5 (81.4)
140E24–22	24–1/2 (622)	22–7/8 (581)	23 (584)	12–1/4 (311)	189 (85.7)

GUIDE SPECIFICATIONS

General

System Description

Furnish a _____ 4-way multipoise gas-fired condensing furnace for use with natural gas or propane (factory-authorized conversion kit required for propane).

Quality Assurance

Unit will be designed, tested and constructed to the current ANSI Z 21.47/CSA 2.3 design standard for gas-fired central furnaces.

Unit will be third party certified by CSA to the current ANSI Z 21.47/CSA 2.3 design standard for gas-fired central furnaces. Unit will carry the CSA Blue Star® and Blue Flame® labels. Unit efficiency testing will be performed per the current DOE test procedure as listed in the Federal Register.

Unit will be certified for capacity and efficiency and listed in the latest AHRI Consumer's Directory of Certified Efficiency Ratings.

Unit will carry the current Federal Trade Commission Energy Guide efficiency label.

Delivery, Storage, and Handling

Unit will be shipped as single package only and is stored and handled per unit manufacturer's recommendations.

Warranty (for inclusion by specifying engineer)

U.S. and Canada only. Warranty certificate available upon request.

Equipment

Blower Wheel and ECM Blower Motor

Galvanized blower wheel shall be centrifugal type, statically and dynamically balanced. Blower motor of ECM type shall be permanently lubricated with sealed ball bearings, of _____hp, and have multiple speeds from 600-1200 RPM operating only when 24-VAC motor inputs are provided. Blower motor shall be direct drive and soft mounted to the blower housing to reduce vibration transmission.

Filters

Furnace shall have reusable-type filters. Filter shall be _____ in. (mm) X _____ in. (mm). An accessory highly efficient Media Filter is available as an option. _____ Media Filter.

Casing

Casing shall be of .030 in. thickness minimum, pre-painted steel.

Draft Inducer Motor

Draft inducer motor shall be single-speed PSC design.

Primary Heat Exchangers

Primary heat exchangers shall be 3-Pass corrosion-resistant aluminized steel of fold-and-crimp sectional design and applied operating under negative pressure.

Secondary Heat Exchangers

Secondary heat exchangers shall be of a stainless steel flow-through of fin-and-tube design and applied operating under negative pressure.

Controls

Controls shall include a micro-processor-based integrated electronic control board with at least 16 service troubleshooting codes displayed via diagnostic flashing LED light on the control, a self-test feature that checks all major functions of the furnace, and a replaceable automotive-type circuit protection fuse. Multiple operational settings available, including blower speeds for heating and cooling.

Operating Characteristics

Heating capacity shall be _____ Btuh input; _____ Btuh output capacity.

Fuel Gas Efficiency shall be _____AFUE.

Air delivery shall be _____ cfm minimum at 0.50 in. W.C. external static pressure.

Dimensions shall be: depth_____in. (mm); width _____in. (mm); height_____in. (mm) (casing only). Height shall be_____in. (mm) with A/C coil and _____in. (mm) overall with plenum.

Electrical Requirements

Electrical supply shall be 115 volts, 60 Hz, single-phase (nominal). Minimum wire size shall be _____AWG; maximum fuse size of HACR-type designated circuit breaker shall be _____ amps.

Special Features

Refer to section of the product data identifying accessories and descriptions for specific features and available enhancements.

Copyright 2019 Carrier Corp. • 7310 W. Morris St. • Indianapolis, IN 46231
. Edition Date: 05/19

Catalog No: 59SC5B−01PD

Manufacturer reserves the right to change, at any time, specifications and designs without notice and without obligations.

Replaces: NEW