619R*D
Ducted Heat Pump Split System
Sizes 09 to 48

bryant®
Heating & Cooling Systems

Owner's Manual

TABLE OF CONTENTS

A NOTE ABOUT SAFETY . . . . . PAGE 2
MODEL NUMBER NOMENCLATURE 2
GENERAL 3
IMPORTANT SAFETY INFORMATION 4
PARTS NAMES 5
REMOTE CONTROL OPERATION 6
REMOTE CONTROL FUNCTIONS 7
USING THE REMOTE CONTROL 10
AIR CONDITIONER OPERATIONS AND PERFORMANCE 19
HINTS FOR ECONOMICAL OPERATION 19
MAINTENANCE 19
FOLLOWING SYMPTOMS ARE NOT AIR CONDITIONER TROUBLES 21
TROUBLESHOOTING 22
SAFETY PRECAUTION 27
SUMMARIZE 28
FUNCTION SUMMARY 28
NAME AND FUNCTION OF INDICATORS ON THE WIRE CONTROLLER 29
INSTALLATION METHOD 30
NAME AND OPERATION OF THE BUTTON ON THE WIRE CONTROL- LER 31
USING METHOD 33
TECHNICAL INDICATION AND REQUIREMENT 35

NOTE TO EQUIPMENT OWNER:

Please read this Owner's Information Manual carefully before installing and using this appliance and keep this manual for future reference.

For your convenience, please record the model and serial numbers of your new equipment in the spaces provided. This information, along with the installation data and dealer contact information, will be helpful should your system require maintenance or service.

UNIT INFORMATION

Model # _____

Serial # _____

INSTALLATION INFORMATION

Date Installed _____

DEALERSHIP CONTACT INFORMATION

Company Name: _____

Address: _____

_____

Phone Number: _____

Technician Name: _____

_____

A NOTE ABOUT SAFETY

Any time you see this symbol ⚠ in manuals, instructions and on the unit, be aware of the potential for personal injury. There are three levels of precaution:

DANGER identifies the most serious hazards which will result in severe personal injury or death.

WARNING signifies hazards that could result in personal injury or death.

CAUTION is used to identify unsafe practices which could result in minor personal injury or product and property damage.

NOTE is used to highlight suggestions which will result in enhanced installation, reliability, or operation.

⚠ WARNING

PERSONAL INJURY, DEATH AND / OR PROPERTY DAMAGE HAZARD

Failure to follow this warning could result in personal injury, death or property damage.

Improper installation, adjustment, alteration, service, maintenance, or use can cause explosion, fire, electrical shock, or other conditions which may cause personal injury or property damage. Consult a qualified installer, service agency, or your distributor or branch for information or assistance. The qualified installer or service agency must use factory-authorized kits or accessories when modifying this product.

Read and follow all instructions and warnings, including labels shipped with or attached to unit before operating your new air conditioner.

Model Numbers

Unit Tons	Unit Btuh	Volt-Ph @ 60Hz	Indoor Model Number
0.75	9,000	208/230-1	619REQ009DBMA
1	12,000	208/230-1	619REQ012DBMA
1.5	18,000	208/230-1	619REQ018DBMA
2	24,000	208/230-1	619REQ024DBMA
3	36,000	208/230-1	619REQ036DBMA
4	48,000	208/230-1	619REQ048DBMA

Model number Nomenclature

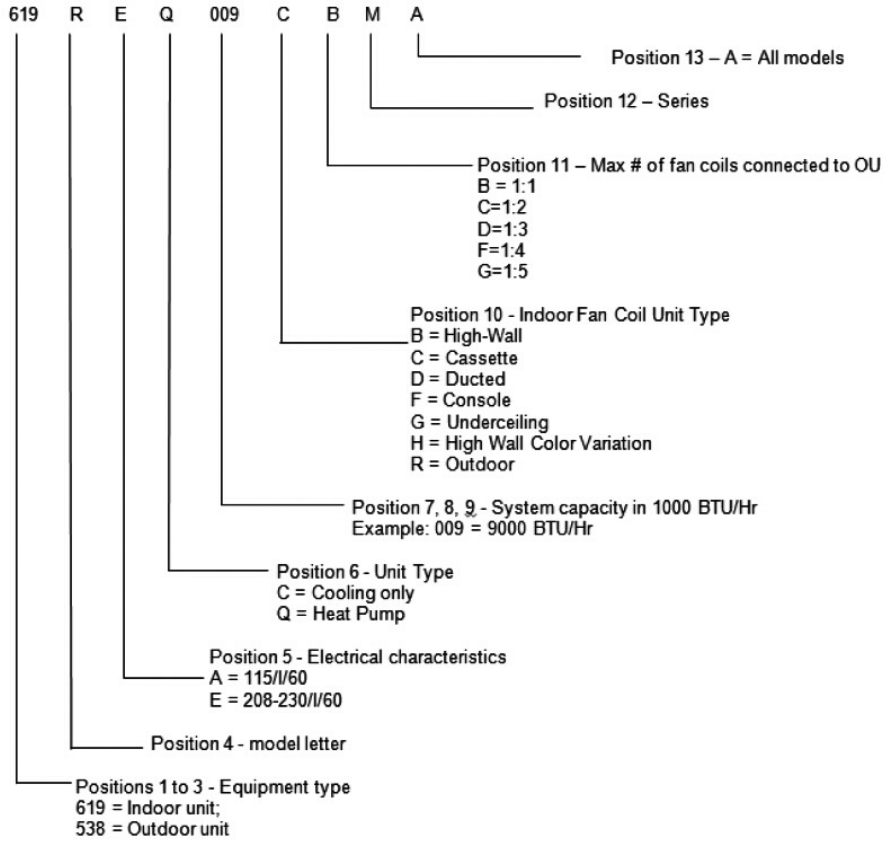

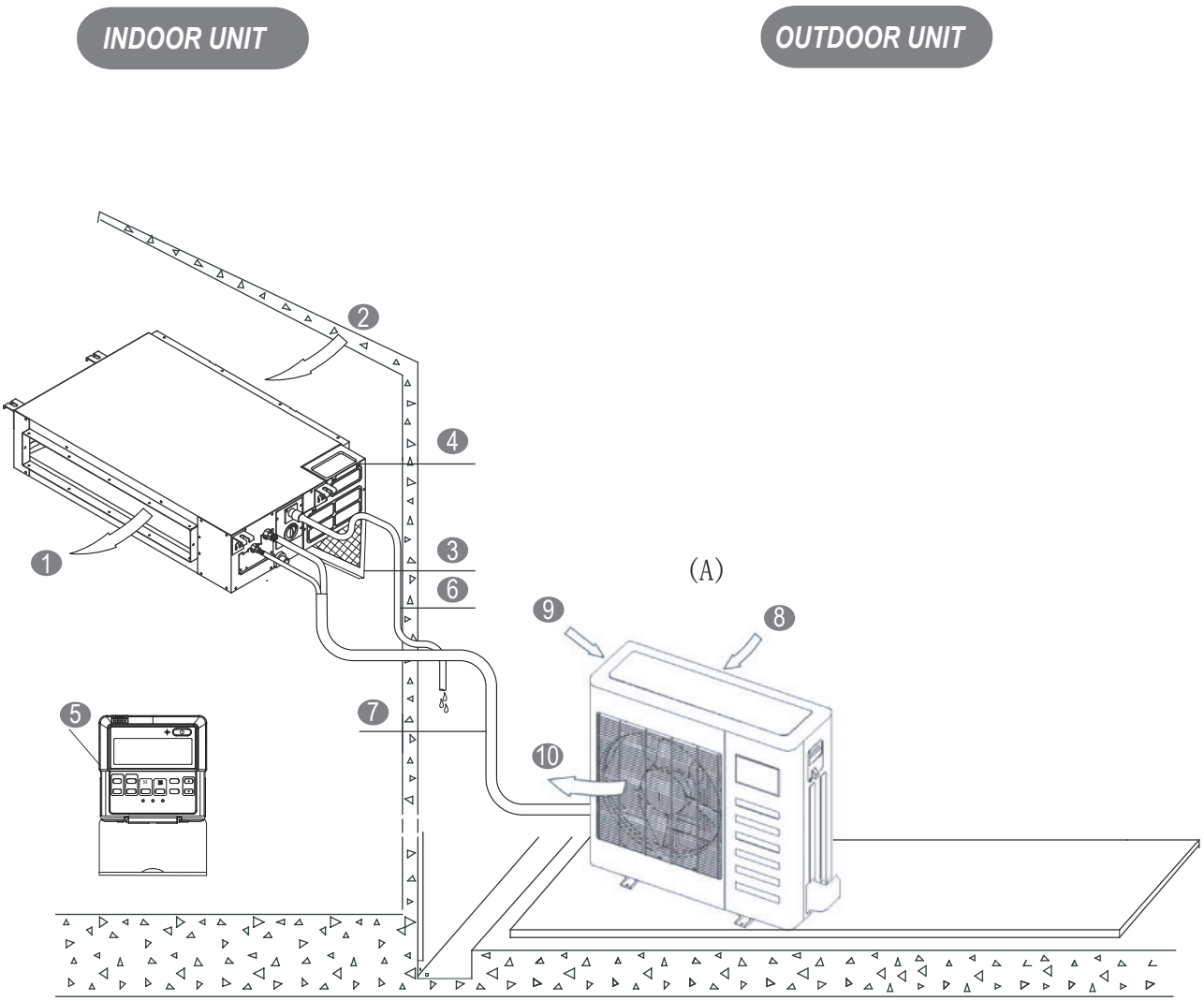

Fig.1

INDOOR UNIT

1. Air outlet
2. Air inlet
3. Air filter(on some models)
4. Electric control cabinet
5. Wire controller(on some models)
6. Drain pipe

OUTDOOR UNIT(A,B,C)

7. Connecting pipe
8. Air inlet
9. Air inlet(side and rear)
10. Air outlet

NOTE

All the pictures in this manual are for explanation purpose only. They may be slightly different from the air conditioner you purchased(depend on model).The actual shape shall prevail.

1. IMPORTANT SAFETY INFORMATION

To prevent injury to the user or other people and property damage, the following instructions must be followed. Incorrect operation due to ignoring of instructions may cause harm or damage.

The safety precautions listed here are divided into two categories. In either case, important safty information is listed which must be read carefully.

WARNING

The appliance shall be installed in accordance with national wiring regulations.Failure to observe a warning may result in death.

CAUTION

Failure to observe a caution may result in injury or damage to the equipment.

WARNING

Ask your dealer for installation of the air conditioner.
Incomplete upgrades may result in a water leakage, electric shock, and fire.

Ask your dealer for upgrades, repair, and maintenance.
Incomplete improvement, repair, and maintenance may result in a water leakage, electric shock, and fire.

In order to avoid electric shock, fire or injury, or if you detect any abnormality such as a burning smell, turn off the power supply and call your dealer for instructions.

Never let the indoor unit or the remote controller get wet.
It may cause an electric shock or a fire.

Never press the button of the remote controller with a hard, pointed object.
The remote controller may be damaged.

Never replace a fuse with that of another rate or other wires when a fuse blows out.
Use of wire or copper wire may cause the unit to break down or cause a fire.

Do not expose your body to the air flow for a long time.

Do not insert fingers, rods or other objects into the air inlet or outlet.
When the fan is rotating at high speed, it will cause injury.

Never use a flammable spray such as hair spray,lacquer or paint near the unit.
It may cause a fire.

Never touch the air outlet or the horizontal blades while the swing flap is in operation.
Fingers may get caught or the unit may break down.

Never put any objects into the air inlet or outlet.
Objects touching the fan at high speed can be dangerous.

Never inspect or service the unit.
Ask a qualified service person to perform this work.

Do not dispose this product as unsorted municipal waste.Collection of such waste separately for special treatment is necessary.

Do not dispose of electrical appliances as unsorted municipal waste, use separate collection facilities.
Contact you local government for information regarding the collection systems available.

If electrical appliances are disposed of in landfills or dumps, hazardous substances can leak into the groundwater and get into the food chain, damaging your health and well-being.

To prevent refrigerant leak, contact your dealer.
When the system is installed and operates in a small room, it is required to maintain the concentration of the refrigerant, below the limit. Otherwise, oxygen in the room may be affected, resulting in a serious accident.

The refrigerant in the air conditioner is safe and normally does not leak.
If the refrigerant leaks in the room, and comes in contact with a fire of a burner, a heater or a cooker the refrigerant leak may transform in to a harmful gas.

Turn off any combustible heating devices, ventilate the room, and contact the dealer where you purchased the unit.
Do not use the air conditioner until a service person confirms that the portion where the refrigerant leaks is repaired.

CAUTION

Do not use the air conditioner for other purposes.
In order to avoid any quality deterioration, do not use the unit for cooling precision instruments, food, plants, animals or works of art.

Before cleaning, be sure to stop the operation, turn the breaker off or pull out the supply cord.
Otherwise, an electric shock and injury may result.

In order to avoid electric shock or fire, make sure that an earth leak detector is installed.

Be sure the air conditioner is grounded.
In order to avoid electric shock, make sure that the unit is grounded and that the earth wire is not connected to gas or water pipe, lightning conductor or telephone earth wire.

In order to avoid injury, do not remove the fan guard of the outdoor unit.

Do not operate the air conditioner with a wet hand.
An electric shock may happen.

Do not touch the heat exchanger fins.
These fins are sharp and could result in cutting injuries.

Do not place items which might be damaged by moisture under the indoor unit.
Condensation may form if the humidity is above 80%, the drain outlet is blocked or the filter is polluted.

After a long use, check the unit stand and fitting for damage.
If damaged, the unit may fall and result in injury.

To avoid oxygen deficiency, ventilate the room sufficiently if equipment with burner is used together with the air conditioner.

Arrange the drain hose to ensure smooth drainage.
Poor drainage may cause wetting of the building, furniture etc.

Never touch the internal parts of the controller.
Do not remove the front panel. Some parts inside are dangerous to touch, and the unit may be damaged.

Never expose little children, plants or animals directly to the air flow.
Adverse influence to little children, animals and plants may result.

Do not allow a child to mount on the outdoor unit or avoid placing any object on it.
Falling or tumbling may result in injury.

Do not operate the air conditioner when using a room fumigation - type insecticide.
Failure to observe could cause the chemicals to deposit in the unit, which could endanger the health of those who are hypersensitive to chemicals.

Do not place appliances which produce open fire in places exposed to the air flow from the unit or under the indoor unit.
It may cause incomplete combuston or deformation of the unit due to the heat.

Do not install the air conditioner at any place where flammable gas may leak out.
If the gas leaks out and remains around the air conditioner, a fire may break out.

The appliance is not intended for use by young children or infirm persons without supervision.

Do not operate your air conditioner in a wet room such as a bathroom or laundry room.

This appliance can be used by children aged from 8 years and above and persons with reduced physical, sensory or mental capabilities or lack of experience and knowledge if they have been given supervision or instruction concerning use of the appliance in a safe way and understand the hazards involved. Children shall not play with the appliance. Cleaning and user maintenance shall not be made by children without supervision.

This appliance is not intended for use by persons (including children) with reduced physical, sensory or mental capabilities, or lack of experience and knowledge, unless they have been given supervision or instruction concerning use of the appliance by a person responsible for their safety.

Children should be supervised to ensure that they do not play with the appliance.

If the supply cord is damaged, it must be replaced by the manufacturer, its service agent or similarly qualified persons in order to avoid a hazard.

2. PARTS NAMES

The air conditioner consists of the indoor unit, the outdoor unit, the connecting pipe and the remote controller.
(Refer to Fig.2-1)

Function indicators on indoor unit display panel

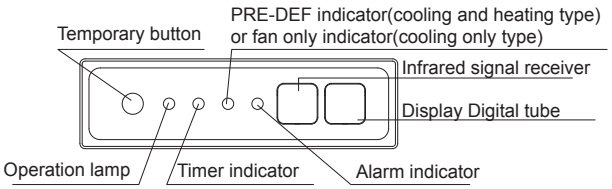

Display panel

Fig.2-1

For the inverter type,this switch is used for after-sales service purposes only,the user should not select it.

For fixed-frequency type,this function is used to operate the unit temporarily in case you misplace the remote controller or its batteries are exhausted. Two modes including FORCED AUTO and FORCED COOL can be selected through the TEMPORARY BUTTON on the air-in grill control box of the indoor unit. Once you push this button, the air conditioner will run in such order: FORCED AUTO, FORCED COOL, OFF, and back to FORCED AUTO.

1 FORCED AUTO
The OPERATION lamp is lit, and the air conditioner will run under FORCED AUTO mode. The remote controller operation is enabled to operate according to the received signal.

2 FORCED COOL
The OPERATION lamp flashes, the air conditioner will turn to FORCED AUTO after it is enforced to cool with a wind speed of HIGH for 30 minutes. The remote controller operation is disabled.

3 OFF
The OPERATION lamp goes off. The air conditioner is OFF while the remote controller operation is enabled.

NOTE

This manual does not include Remote Controller Operations, see the<<Remote Controller Owner's manual>> packed with the unit for details.

3. REMOTE CONTROL OPERATION

Handling the remote controller

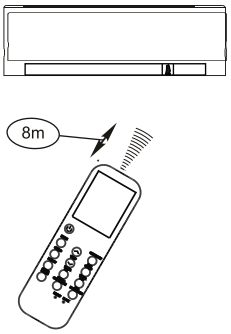

Location of the remote controller.

- Use the remote controller within a distance of 8 meters from the appliance, pointing it towards the receiver. Reception is confirmed by a beep.
- Keep the remote controller where its signals can reach the receiver of the unit.

⚠ CAUTIONS

- The air conditioner will not operate if curtains, doors or other materials block the signals from the remote controller to the indoor unit.
- Prevent any liquid from falling into the remote controller. Do not expose the remote controller to direct sunlight or heat.
- If the infrared signal receiver on the indoor unit is exposed to direct sunlight, the air conditioner may not function properly. Use curtains to prevent the sunlight from falling on the receiver.
- If other electrical appliances react to the remote controller. either move these appliances or consult your local dealer.

Replacing batteries

The remote controller is powed by two dry batteries(R03/LR03X2) housed in the rear part and protected by a cover.

(1) Remove the cover by pressing and sliding off.

(2) Remove the old batteries and insert the new batteries,placing the(+) and (-) ends correctly.

(3) Reattach the cover by sliding it back into position.

NOTE: When the batteries are removed, the remote controller erases all programming. After inserting new batteries, the remote controller must be reprogrammed.

⚠ CAUTIONS

- Do not mix old and new batteries or batteries of different types.
- Do not leave the batteries in the remote controller if they are not going to be used for 2 or 3 months.
- Do not dispose batteries as unsorted municipal waste. Collection of such waste separately for special treatment is necessary.

4. REMOTE CONTROL FUNCTIONS

Remote Controller Specifications

Model	RG52F2/BGEFU1.
Rated Voltage	3.0V(Dry batteries R03/LR03×2)
Signal Receiving Range	8m
Environment	23F° ~ 140F°

Performance Feature

1. Operating Mode: AUTO, COOL, DRY, HEAT(enabled on cooling& heating models only) and FAN.
2. Timer Setting Function in 24 hours.
3. Indoor Setting Temperature Range : 62°F~86°F.
4. Full function of LCD (Liquid Crystal Display).

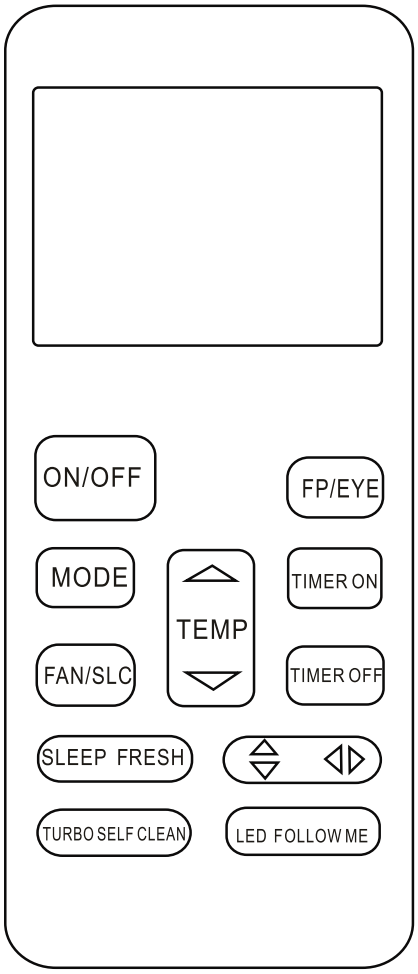

Function buttons

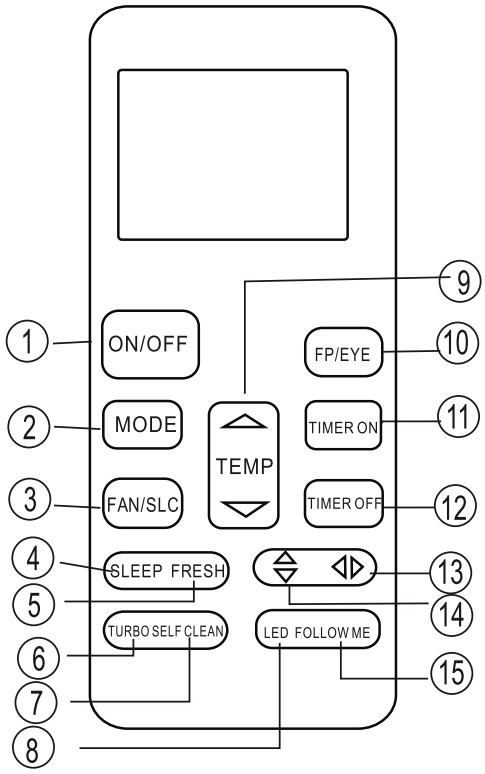

❶ **ON/OFF Button**

Operation starts when this button is pressed and stops when this button is pressed again.

❷ **MODE Button**

Each time the button is pressed, the operation mode is selected in a sequence of following:

→AUTO → COOL → DRY → HEAT → FAN

NOTE: Please do not select HEAT mode if the machine you purchased is cooling only type. Heat mode is not supported by the cooling only appliance.

❸ **FAN/SLC Button**

- Used to select the fan speed in four steps:
  → AUTO → LOW → MED → HIGH
- If pushing more than 2 seconds, the Silence function will be activated, pushing more than 2 seconds again to disable.
- When the Silence function is activated, the compressor will operate at low frequency and the indoor unit will bring faint breeze, which will reduce the noise to the lowest level and creat a quiet and comfortable room for you. Due to low frequency operation of compressor, it may result in insufficient cooling and heating capacity.

❹ **SLEEP Button**

Active/Disable sleep function. It can maintain the most comfortable temperature and save energy. This function is available on COOL, HEAT or AUTO mode only .
For the details, please see "sleep operation" in "USER'S MANUAL".

NOTE: *While the unit is running under SLEEP mode, it would be cancelled if MODE, FAN SPEED or ON/OFF button is pressed.*

❺ **FRESH Button**

Pushing this button to activate the FRESH function. Pushing it again to disable.

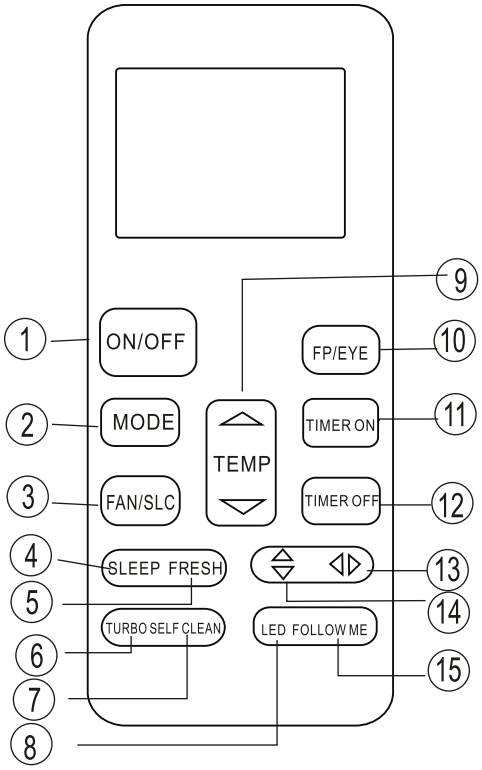

❻ **TURBO Button**

Active/Disable Turbo function. Turbo function enables the unit to reach the preset temperature at cooling or heating operation in the shortest time(if the indoor unit does not support this function, there is no corresponding operation happened when pressing this button.)

❼ **SELF CLEAN Button**

Active/Disable Self Clean function. For details, please see "Special functions" in "USER'S MANUAL".

❽ **LED Button**

Disable/Active indoor screen Display. When pushing the button, the indoor screen display is cleared, press it again to light the display.

❾ **UP Button(△)**

Push this button to increase the indoor temperature setting in 1°F increments to 86°F.

DOWN Button(▽)

Push this button to decrease the indoor temperature setting in 1°F increments to 62°F.

NOTE: Press and hold "△" and "▽" buttons together for 3 seconds will alternate the temperature display between the °C & °F scale.

❿ **FP/EYE Button**

- Active/Disable freeze protection function. If pushing more than 2 seconds, the Intelligent eye function will be activated, pushing more than 2 seconds again to disable.
- During the heating operation(only when the setting mode is HEAT),If pushing this button more than 2 seconds, the freeze protection function is activated. The unit will operate at high fan speed with the temperature automatically set to 8°C.The display window of indoor unit will display 'FP'. For the unit without display area, the Defrost indicator light will be

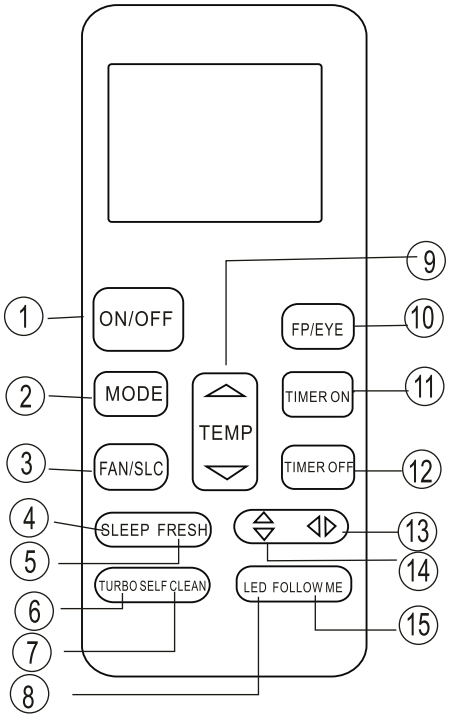

keeping on for 2 seconds, and then be off for 2 seconds by turns. Press ON/OFF,SLEEP, FP, MODE, FAN SPEED,UP, DOWN button while operating will cancel the freeze protection function.

- Under Intelligent eye function, with the built-in infrared sensor, the unit can detects existence of humans in the room. If the unit keep detecting no human activity for 30 min, it will automatically enters standby(monitor) status in order to save electricity. And the unit will automatically start and resume operation if sensing human activity again.

⓫ **TIMER ON Button**
Press this button to initiate the auto-on time sequence. Each press will increase the auto-timed setting in 30 minutes increments. When the setting time displays 10, each press will increase the auto-timed setting 60 minutes increments. To cancel the auto-timed program, simply adjust the auto-on time to 0.0.

⓬ **TIMER OFF Button**
Press this button to initiate the auto-off time sequence. Each press will increase the auto-timed setting in 30 minutes increments. When the setting time displays 10, each press will increase the auto-timed setting 60 minutes increments. To cancel the auto-timed program, simply adjust the auto-off time to 0.0

⓭ **Swing ◁▷ Button**
Used to stop or start vertical louver movement and set the desired left/right air flow direction. The vertical louver changes 6 degree in angle for each press. And the temperature display area of indoor unit displays ' ╔╗ ' for one second. If keep pushing more than 2 seconds, the vertical louver swing feature is activated. And the display area of indoor unit displays ' IIII' , flashes four times, then the temperature setting reverts back. If the vertical louver swing feature is stopped, it displays 'LC' and remains on for 3 seconds.

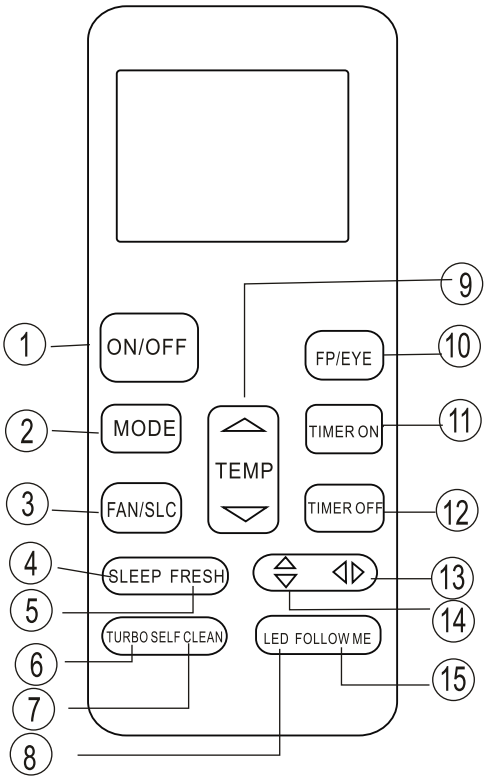

⓮ Swing ⇕ Button

Used to stop or start horizontal louver movement or set the desired up/down air flow direction. The louver changes 6 degree in angle for each press. If keep pushing more than 2 seconds, the louver will swing up and down automatically.

⓯ FOLLOW ME Button:

Push this button to initiate the Follow Me feature, the remote display is actual temperature at its location. The remote control will send this signal to the air conditioner every 3 minutes interval until press the Follow Me button again. The air conditioner will cancel the Follow Me feature automatically if it does not receive the signal during any 7 minute interval.

NOTE:

- Buttons design might be slightly different from the actual one you purchased
- depending on individual models.
  All the functions described are accomplished by the indoor unit. If the indoor unit has no this feature, there is no corresponding operation happened when press the relative button on the remote controller.

Indicators on LCD

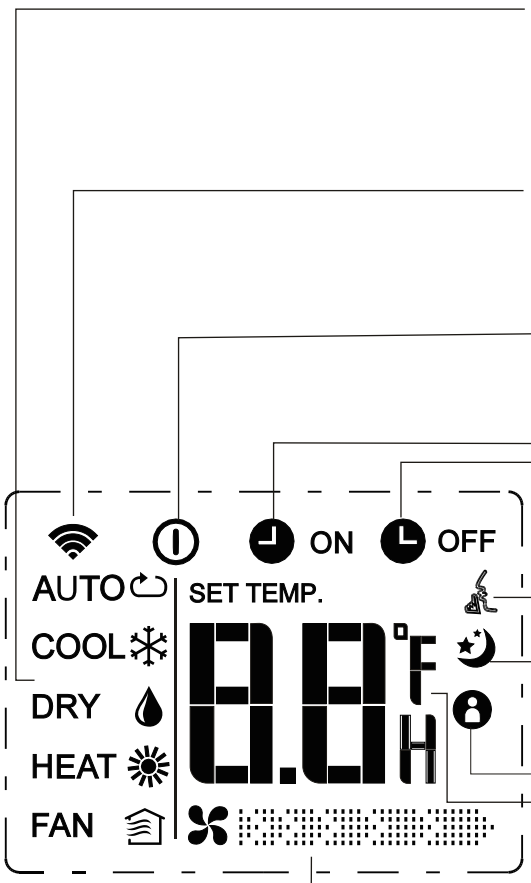

Mode display
Displays the current operation mode. Including auto( ), cool( ), dry( ), heat( ) (be applicable to cooling & heating models only), fan( ) and back to auto( ).

Transmission Indicator
This transmission indicator lights when remote controller transmits signals to the indoor unit.

ON/OFF display
Displayed by pressing the ON/OFF button. Press the ON/OFF button again to remove.

TIMER ON display
Displayed when TIMER ON time is set.

TIMER OFF display
Displayed when TIMER OFF time is set.

SILENCE display
Displayed when SILENCE function is activated.

Sleep Display
Displayed under sleeping operation. Press the SLEEP button again to remove.

FOLLOW ME Display(on some models)
Displayed when FOLLOW ME function is activated.

Temp./Timer display
Displays the temperature setting(62℉ ~86℉). When you set the operating mode to FAN, no temperature setting is displayed. And if in the TIMER mode, shows the ON and OFF settings of the TIMER.

Fan speed display
Displays the selected fan speed, AUTO(no display) and three fan speed levels " " (LOW) " " (MED) " " (HIGH) can be indicated. The fan speed is AUTO when the operating mode is either AUTO or DRY.

Note:
All indicators shown in the figure are for the purpose of clear presentation. But during the actual operation only the relative functional signs are shown on the display window.

How to use the buttons

Auto operation

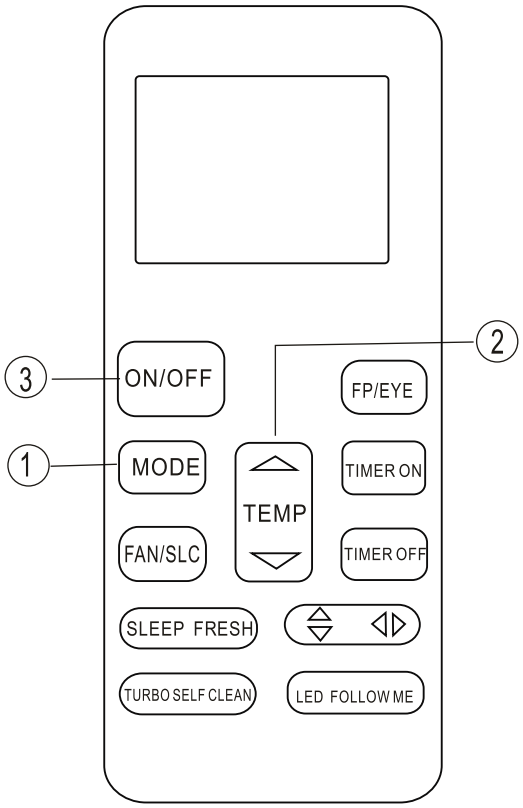

Ensure the unit is plugged in and power is available. The OPERATION indicator on the display panel of the indoor unit starts flashing.

1. Press the **MODE** button to select Auto.
2. Press the **UP/DOWN** button to set the desired temperature. The temperature can be set within a range of 62°F~ 86°F in 1°F increments.
3. Press the **ON/OFF** button to start the air conditioner.

NOTE

1. In the Auto mode, the air conditioner can logically choose the mode of Cooling, Fan, and Heating by sensing the difference between the actual ambient room temperature and the setting temperature on the remote controller.

2. In the Auto mode, you can not switch the fan speed. It has already been automatically controlled.

3. If the Auto mode is not comfortable for you , the desired mode can be selected manually.

Cooling /Heating/Fan operation

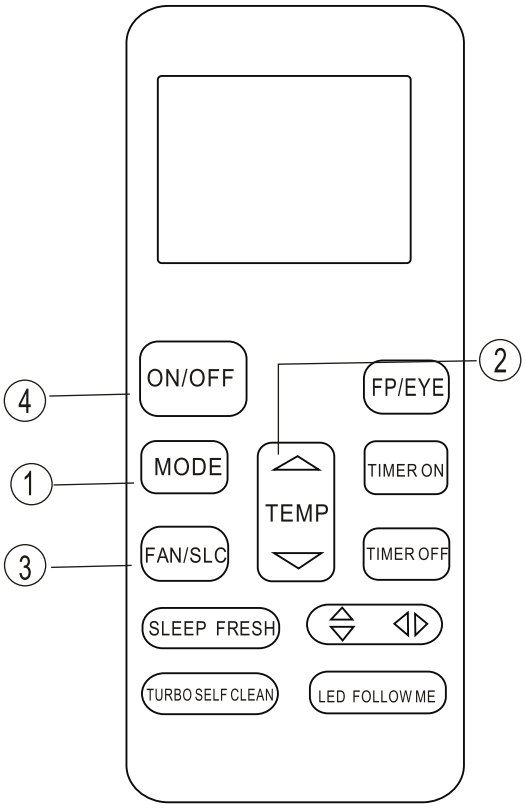

Ensure the unit is plugged in and power is available.

1. Press the **MODE** button to select COOL, HEAT(cooling & heating models only) or FAN mode.
2. Press the **UP/DOWN** buttons to set the desired temperature. The temperature can be set within a range of 62°F~ 86°F in 1°F increments.
3. Press the **FAN** button to select the fan speed in four steps- Auto, Low, Med,or High.
4. Press the **ON/OFF** button to start the air conditioner.

NOTE

In the FAN mode, the setting temperature is not displayed in the remote controller and you are not able to control the room temperature either. In this case, only step 1, 3 and 4 may be performed.

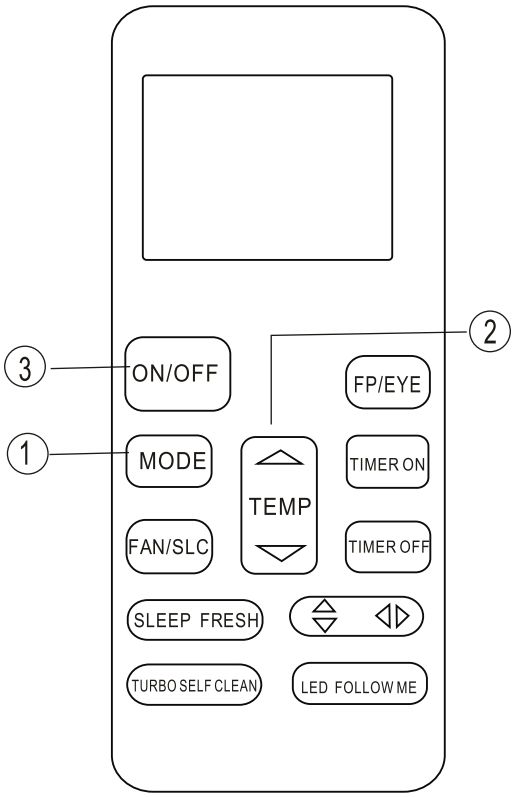

Dehumidifying operation

Ensure the unit is plugged in and power is available. The OPERATION indicator on the display panel of the indoor unit starts flashing.

1. Press the **MODE** button to select DRY mode.
2. Press the **UP/DOWN** buttons to set the desired temperature. The temperature can be set within a range of 62°F~ 86°F in 1°F increments.
3. Press the **ON/OFF** button to start the air conditioner.

NOTE

In the Dehumidifying mode, you can not switch the fan speed. It has already been automatically controlled.

Adjusting air flow direction

Use the SWING ⇕ and SWING ◁▷ buttons to adjust the desired airflow direction.

1. When push the SWING ⇕ button, the horizontal louver changes 6 degree in angle for each push. If pushing more than 2 seconds, the louver will automatically swing up and down.
2. When push the SWING ◁▷ button, the vertical louver changes 6 degree in angle for each push. If pushing more than 2 seconds, the louver will automatically swing left and right.

NOTE: When the horizontal/vertical louver swing or move to a position which would affect the cooling or heating effect of the air conditioner, it would automatically change the swing/moving direction.

Timer operation

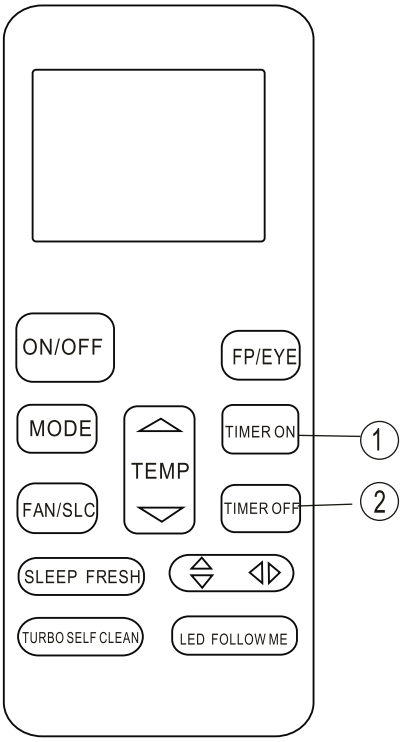

Press the TIMER ON button can set the auto-on time of the unit. Press the TIMER OFF button can set the auto-off time of the unit.

To set the Auto-on time.

1. Press the TIMER ON button. The remote controller shows TIMER ON, the last Auto-on setting time and the signal "H" will be shown on the LCD display area. Now it is ready to reset the Auto-on time to START the operation.
2. Push the TIMER ON button again to set desired Auto-on time. Each time you press the button, the time increases by half an hour between 0 and 10 hours and by one hour between 10 and 24 hours.
3. After setting the TIMER ON ,there will be a one second delay before the remote controller transmits the signal to the air conditioner. Then, after approximately another 2 seconds, the signal "h" will disappear and the set temperature will re-appear on the LCD display window.

To set the Auto-off time.

1. Press the TIMER OFF button. The remote controller shows TIMER OFF, the last Auto-off setting time and the signal "H" will be shown on the LCD display area. Now it is ready to reset the Auto-off time to stop the operation.
2. Push the TIMER OFF button again to set desired Auto-off time. Each time you press the button, the time increases by half an hour between 0 and 10 hours and by one hour between 10 and 24 hours.
3. After setting the TIMER OFF ,there will be a one second delay before the remote controller transmits the signal to the air conditioner. Then, after approximately another 2 seconds, the signal "H " will disappear and the set temperature will re-appear on the LCD display window.

⚠ CAUTION

- The effective operation time set by the remote controller for the timer function is limited to the following settings: 0.5, 1.0, 1.5, 2.0, 2.5, 3.0, 3.5, 4.0, 4.5, 5.0, 5.5, 6.0, 6.5, 7.0, 7.5, 8.0, 8.5, 9.0, 9.5, 10, 11, 12, 13, 14, 15,16,17, 18, 19, 20, 21, 22, 23 and 24.

Example of timer setting

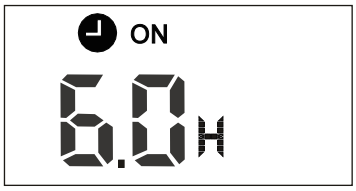

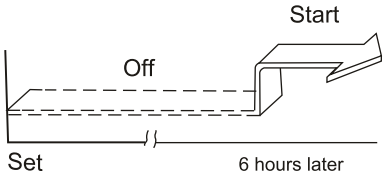

TIMER ON
(Auto-on Operation)

The TIMER ON feature is useful when you want the unit to turn on automatically before you return home. The air conditioner will automatically start operating at the set time.

Example:

To start the air conditioner in 6 hours.

1. Press the TIMER ON button, the last setting of starting operation time and the signal "H" will show on the display area.
2. Press the TIMER ON button to display "6.0H " on the TIMER ON display of the remote controller.
3. Wait for 3 seconds and the digital display area will show the temperature again. The "TIMER ON" indicator remains on and this function is activated.

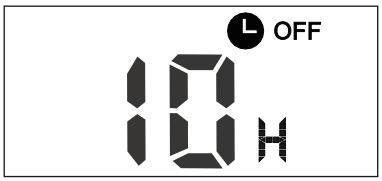

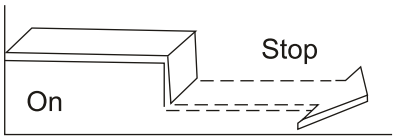

Set 10 hours later

TIMER OFF
(Auto-off Operation)

The TIMER OFF feature is useful when you want the unit to turn off automatically after you go to bed. The air conditioner will stop automatically at the set time.

Example:

To stop the air conditioner in 10 hours.

1. Press the TIMER OFF button, the last setting of stopping operation time and the signal "H" will show on the display area.
2. Press the TIMER OFF button to display "10H " on the TIMER OFF display of the remote controller.
3. Wait for 3 seconds and the digital display area will show the temperature again. The "TIMER OFF" indicator remains on and this function is activated.

COMBINED TIMER
(Setting both ON and OFF timers simultaneously)

TIMER OFF → TIMER ON
(On → Stop → Start operation)

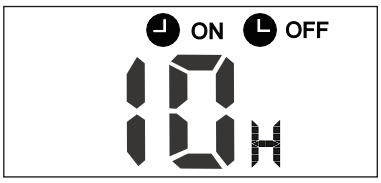

This feature is useful when you want to stop the air conditioner after you go to bed, and start it again in the morning when you wake up or when you return home.

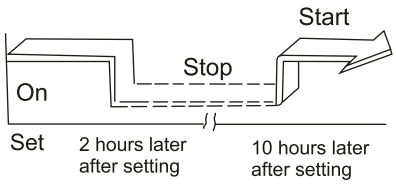

Example:

To stop the air conditioner 2 hours after setting and start it again 10 hours after setting.

1. Press the TIMER OFF button.
2. Press the TIMER OFF button again to display 2.0H on the TIMER OFF display.
3. Press the TIMER ON button.
4. Press the TIMER ON button again to display 10H on the TIMER ON display .
5. Wait for 3 seconds and the digital display area will show the temperature again. The "TIMER ON OFF" indicator remains on and this function is activated.

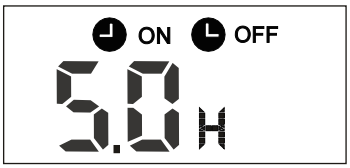

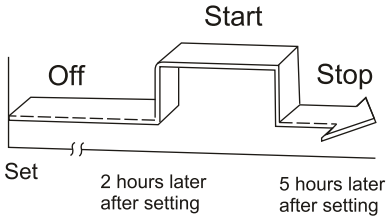

TIMER ON → TIMER OFF
(Off → Start → Stop operation)
This feature is useful when you want to start the air conditioner before you wake up and stop it after you leave the house.

Example:

To start the air conditioner 2 hours after setting, and stop it 5 hours after setting.

1. Press the TIMER ON button.
2. Press the TIMER ON button again to display 2.0H on the TIMER ON display.
3. Press the TIMER OFF button.
4. Press the TIMER OFF button again to display 5.0H on the TIMER OFF display .
5. Wait for 3 seconds and the digital display area will show the temperature again. The "TIMER ON OFF" indicator remains on and this function is activated.

NOTE: The timer setting(TIMER ON or TIMER OFF) that in sequence occurs directly after the set time will be activated first.

6. AIR CONDITIONER OPERATIONS AND PERFORMANCE

Use the system in the following temperature for safe and effective operation.The max operation temperature for the air conditioner.(Cooling/Heating)

Table 2-1

Temperature / Mode	Outdoor temperature	Room temperature
Cooling operation	32 °F~122°F / 0°C ~ 50°C	62°F ~90°F (17°C~32°C)
	5 °F~122°F / -15°C ~ 50°C (for the models with low temperature cooling system)	
Heating operation (cooling only type without)	5 °F~76°F / -15°C ~ 24°C	32°F~86°F (0°C~30°C)
Dry operation	32 °F~122°F / 0°C ~ 50°C	62°F ~90°F (17°C~32°C)

NOTE

1. If air conditioner is used outside the above conditions, it may cause the unit to function abnormally.
2. Is it normal for condensation to form on the unit when the relative humidity in a room is high. Close the door and windows to help reduce the condensation.
3. Optimum performance will be achieved within these operating temperature range.

Three-minute protection feature

A protection feature prevents the air conditioner from being activated for approximately 3 minutes when it restarts immediately after operation.

Power failure

Power failure during operation will stop the unit completely.

- The OPERATION lamp on the indoor unit will start flashing when power is restored.
- To restart operation, push the ON/OFF button on the remote controller.
- Lightning or a mobile telephone operating nearby may cause the unit to malfunction.

Disconnect the unit with the power and then connect the unit with the power again. Push the ON/OFF button on the remote controller to restart operation.

Refrigerant Leakage Detection(optional):

With this new technology, the display area will display 'EC' (if applicable) and the LED indication lamps continue flashing when the outdoor unit detects refrigerant leakage.

7. HINTS FOR ECONOMICAL OPERATION

The following should be noticed to ensure an economical operation. (Refer to corresponding chapterfor details)

- Adjust the air flow direction properly to avoid winding toward your body.
- Adjust the room temperature properly to get a comfortable situation and to avoid supercooling and superheat.
- In cooling, close the curtains to avoid direct sunlight.
- To keep cool or warm air in the room, never open doors or windows more often than necessary.
- Set the timer for the desired operating time.
- Never put obstructions near the air outlet or the air inlet. Or it will cause lower efficiency, even a sudden stop.
- Adjust the air flow direction properly to avoid winding toward your body.
- Adjust the room temperature properly to avoid supercooling and superheat.
- In cooling, close the curtains to avoid direct sunlight.
- To keep cool or warm air in the room, never open doors or windows more than necessary.
- If you don't plan to use the unit for a long time, please disconnect power and remove the batteries from the remote controller. When the power switch is connected, some energy will be consumed, even if the air conditioner isn't in operation. So please disconnect the power to save energy. And please switch the power on 12 hours before you restart the unit to ensure a smooth operation.
- A clogged air filter will reduce cooling or heating efficiency, please clean it once two weeks.

8. MAINTENANCE

CAUTION

Before you clean the air conditioner, be sure the power supply is off.

Check to see if wiring is broken or disconnected.

Use a dry cloth to wipe the indoor unit and remote controller.

A wet cloth may be used to clean the indoor unit if it is very dirty.

Never use a damp cloth on the remote controller.

Do not use a chemically-treated duster for wiping or leave such material on the unit for long because.
it may damage or fade the surface of the unit.

Do not use benzine, thinner, polishing powder, or similar solvents for cleaning.
These may cause the plastic surface to crack or deform.

■ Maintenance after a long stop period

Check and remove everything that might be blocking inlet and outlet vents of indoor units and outdoor units.

Clean air filters and casings of indoor units.
Refer to "Cleaning the air filter" for details on how to proceed and make sure to install cleaned air filters back in the same position.

Check and remove everything that might be blocking inlet and outlet vents of indoor units and outdoor units.

Clean air filters and casings of indoor units.
Refer to "Cleaning the air filter" for details on how to proceed and make sure to install cleaned air filters back in the same position.
Turn on the power at least 12 hours before operating the unit in order to ensure smoother operation. As soon as he power is turned on, the remote controller displays appear.

■ Maintenance before a long stop period

Let the indoor units run in fan only operation for about half a day in order to dry the interior of the units.

Clean air filters and casings of indoor units. Refer to " Cleaning the air filter" for details on how to proceed and make sure to install cleaned air filters back in the same position.

■ Cleaning the air filter(on some models)

The air filter can prevent dust or other particulate from entering the unit. In case of blockage of the filter, the working efficiency of the air conditioner may greatly decrease.
Therefore, the filter must be cleaned once every two weeks during long time usage.

If the air conditioner is installed in a dusty place , clean the the air filter frequently.

If the accumulated dust is too heavy to be cleaned , please replace the filter with a new one(replaceable air filter is an optional fitting).

■ If your unit is a rear ventilated model, please remove the filter fixed screws（2 screws）and pull the filter away from the unit.

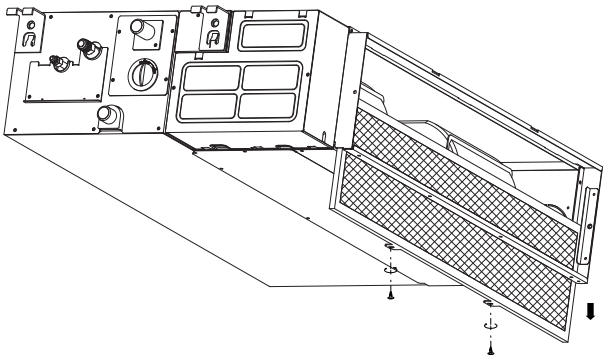

Fig.5-1

■ If your unit is a descensional ventilated model, please push the filter up slightly to let the position retainer move away from the flange fixed holes, and take off the filter according to the arrow direction shows in the following fig.

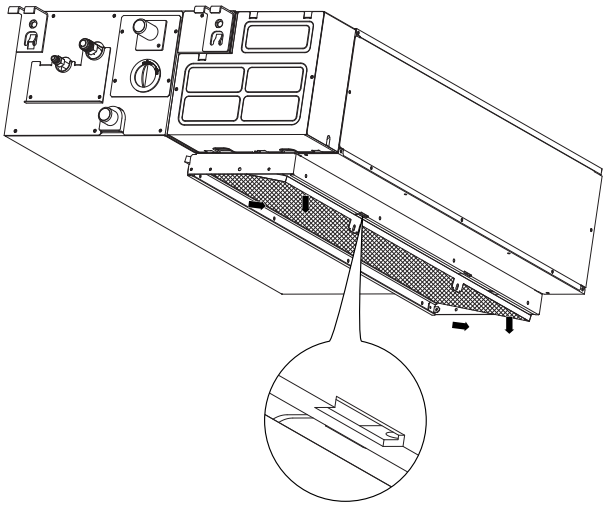

Fig.5-2

● Clean the air filter (vacuum cleaner or pure water may be used to clean the air filter. If the dust accumulation is too heavy , please use asoft brush and mild detergent to clean it and dry out in cool place) .

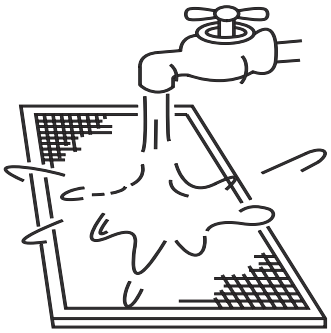

Fig.5-3

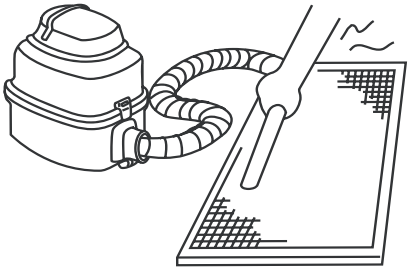

Fig.5-4

The air-in side should face up when using vacuum cleaner. *(Refer to Fig.5-4)*
The air-in side should face down when using water. *(Refer to Fig.5-3)*

CAUTION

Do not dry out the air filter under direct sunshine or with fire.

5. Re-install the air filter
6. Install and close the air-in grill in the reverse order of step 1 and 2 and connect the control box cables to the corresponding terminators of the main body .

9. FOLLOWING SYMPTOMS ARE NOT AIR CONDITIONER TROUBLES

Symptom 1: The system does not operate

- The air conditioner does not start immediately after the ON/OFF button on the romote controller is pressed.
  If the operation lamp lights, the system is in normal condition.To prevent overloading of the compressor motor, the air conditioner starts 3 minutes after it is turned ON.
- If the operation lamp and the "PRE-DEF indicator(cooling and heating type) or fan only indicator(cooling only type)" light, it means you choose the heating model, When just starting, if the compressor has not started, the indoor unit appears "anti cold wind" protection because of its overlow outlet temperature.

Symptom 2: Change into the fan mode during cooling mode

- In order to prevent the indoor evaporator frosting, the system will change into fan mode automatically, restore to the cooling mode after soon.
- When the room temperature drops to the set temperature, the compressor goes off and the indoor unit changes to fan mode; when the temperature rises up, the compressor starts again. It is same in the heating mode.

Symptom 3: White mist comes out of a unit

Symptom 3.1: Indoor unit

- When humidity is high during cooling operation If the interior of an indoor unit is extremely contaminated, the temperature distribution inside a room becomes uneven. It is necessary to clean the interior of the indoor unit. Ask your dealer for details on cleaning the unit. This operation requires a qualified service erson

Symptom 3.2: Indoor unit, outdoor unit

- When the system is changed over to heating operation after defrost operation moisture generated from defrosting becomes steam and is exhausted.

Sptom 4: Noise of air conditionerscooling

Symptom 4.1: Indoor unit

- A continuous low "shah" sound is heard when the system is in cooling operation or at a stop.
  When the drain pump (optional accessories) is in operation,this noise is heard.
- A "pishi-pishi" squeaking sound is heard when the system stops after heating operation.
  Expansion and contraction of plastic parts caused by temperature change make this noise.

Symptom 4.2: Indoor unit, outdoor unit

- A continuous low hissing sound is heard when the system is in operation.
  This is the sound of refrigerant gas flowing through both indoor and outdoor units.
- A hissing sound which is heard at the start or immediately after stopping operation or defrost operation.
  This is the noise of refrigerant caused by flow stop or flow change.

Symptom 4.3: Outdoor unit

- When the tone of operating noise changes.
  This noise is caused by the change of frequency.

Symptom 5: Dust comes out of the unit

- When the unit is used for the first time in a long time.
  This is because dust has gotten into the unit.

Symptom 6: The unit can emit odors

- The unit can absorb the smell of rooms, furniture, cigarettes, etc., and then emit it again.

Symptom 7: The outdoor unit fan does not spin.

- During operation. The speed of the fan is controlled in order to optimize product operation.

10. TROUBLESHOOTING

7.1. Troubles and causes of air conditioner

If one of the following malfunctions occur, stop operation, shut off the power, and contact with your dealer.

- The operation lamp is flashing rapidly (5Hz). This lamp is still flashing rapidly after you turn off the power and turn it on again. (Refer to Table 7-1 and Table 7-2)
- Remote controller receives malfunction or the button does not work well.
- A safety device such as a fuse, a breaker frequently actuates.
- Obstacles and water enter the unit.
- Water leaks from indoor unit.
- Other malfunctions.

If the system does not properly operate except the above mentioned cases or the above mentioned malfunctions is evident, investigate the system according to the following procedures. (Refer to Table 7-3)

CAUTION

Please cut off the power supply when appearing the above malfunction, check if the voltage provided is out of range, check if the installation of air-conditioner is correct, then electrify again after 3 minutes power off. If the problem is still existent, please contact the local service station or the equipment provider.

Table 7-1

NO.	Malfunction	Display (nixie tube)	Timer lamp	Running lamp (flashes per second)
1	Indoor EEPROM error	E0	OFF	1
2	Communication malfunction between indoor and outdoor units	E1	OFF	2
3	Indoor fan speed malfunction	E3	OFF	4
4	Indoor room temperature sensor open circuit or short circuit	E4	OFF	5
5	Evaporator coil temperature sensor open circuit or short circuit	E5	OFF	6
6	Refrigerant leakage detection malfunction	EC	OFF	7
7	Water-level alarm malfunction	EE	OFF	8
8	Communication malfunction between two indoor units (for twins model)	E8	OFF	9
9	Other malfunction of twins model	E9	OFF	10
10	Current overload protection	F0	ON	1
11	Outdoor room temperature sensor open circuit or short circuit	F1	ON	2
12	Outdoor condenser pipe temperature sensor error	F2	ON	3
13	Discharging air temperature sensor error	F3	ON	4
14	Outdoor EEPROM error	F4	ON	5
15	Outdoor fan speed malfunction (Only for DC fan motor)	F5	ON	6
16	T2b sensor error	F6	ON	7
17	Inverter module IPM protection	P0	Flash	1
18	High/Low voltage protection	P1	Flash	2
19	High temperature protection of compressor top	P2	Flash	3
20	Outdoor low temp. protection	P3	Flash	4
21	Compressor drive error	P4	Flash	5
22	Mode conflict	P5	Flash	6

Table 7-2

Symptoms	Causes	Solution
Unit does not start	• Power failure. • Power switch is off. • Fuse of power switch may have burned. • Batteries of remote controller exhausted or other problem of controller.	• Wait for the return of power. • Switch on the power. • Replace the fuse. • Replace the batteries or check the controller.
Air flowing normally however unit is not cooling cooling	• Temperature is not set correctly. • Unit is in 3 minutes protection mode for the compressor.	• Set the temperature properly. • Wait.
Units starts or stops frequently	• Refrigerant is too low or too high. • Air or no concentrating gas in the refrigerating circuit. • Compressor is malfunction. • Voltage is too high or too low. • System circuit is blocked.	• Check leakage, and rightly recharge refrigerant. • Vacuum and recharge refrigerant. • Maintenance or change compressor. • Install manostat. • Find reasons and solution.
Low cooling effect	• Outdoor unit and indoor unit heat exchanger is dirty. • The air filter is dirty. • Inlet/outlet of indoor/outdoor units is blocked. • Doors and windows are open • Direct sunlight on unit. • A strong heat source nearby. heat resource. • Outdoor temp. is too high. • Leakage of refrigerant or lack of refrigerant.	• Clean the heat exchanger. • Clean the air filter. • Eliminate all dirt. • Close doors and windows. • Adjust curtains to shelter unit from sunshine. • Reduce heat source. • AC cooling capacity reduces (normal). • Check leakage and rightly recharge refrigerant.
Low heating effect	• Outdoor temperature is lower than 44.6˚F/7˚C • Doors and windows not completely closed. • Leakage of refrigerant or lack of refrigerant.	• Use heating device. • Close doors and windows. • Check leakage and rightly recharge refrigerant.

7.2. Troubles and causes of wire controller

Before asking for serving or repairing , check the following points. (Refer to Table 7-3)

Table 7-*3*

Symptoms	Solution	Causes
The fan speed can not be changed.	● Check whether the MODE indicated on the display is "AUTO"	When the automatic mode is selected, the air conditioner will automatically change the fan speed.
	● Check whether the MODE indicated on the display is "DRY"	When dry operation is selected, the air conditioner automatically change the fan speed. The fan speed can be selected during "COOL" , "FAN ONLY", and "HEAT"
The wire controller signal is not transmitted even when the ON/OFF button is pushed.	● Check whether the signal transmitter of the wire controller is properly directed to the infrared signal receiver of the indoor unit.	The power supply is off.
The TEMP. indicator does not come on.	● Check whether the MODE indicated on the display is FAN ONLY	The temperature cannot be set during FAN mode.
The indication on the display disappears after a period of time.	● Check whether the timer operation has come to an end when the TIMER OFF is indicated on the display.	The air conditioner operation will stop at the set time
The TIMER ON indicator goes off after a period of certain time.	● Check whether the timer operation is started when the TIMER ON is indicated on the display.	Up to the set time, the air conditioner will automatically start and the appropriate indicator will go off.
Not receiving tone sounds from the indoor unit even when the ON/OFF button is pressed.	● Check whether the signal transmitter of the wire controller is properly directed to the infrared signal receiver of the indoor unit when the ON/OFF button is pressed.	Directly transmit the signal transmitter of the wire controller to the infrared signal receiver of the indoor unit, and then repeatly push the ON/OFF button twice.

- This manual gives detailed description of the precautions that should be brought to your attention during operation.

- In order to ensure correct service of the wired controller please read this manual carefully before using the unit.

- For convenience of future reference, keep this manual after reading it.

- The wired controller will reset to factory setting with auto mode, auto fan and 76°F(24°C) setting temperature when the air conditioner restarts after power failure.
  And this may cause inconsistent displays on the wired controller and on the air conditioner. You need to readjust the running status through the wired controller.

11. SAFETY PRECAUTIONS

The following contents are stated on the product and the operation manual, including usage, precautions against personal harm and property loss, and the methods of using the product correctly and safely. After fully understanding the following contents (identifiers and icons), read the text body and observe the following rules.

■ Identifier description

Identifier	Meaning
Warning	Means improper handling may lead to personal death or severe injury.
Caution	Means improper handling may lead to personal injury or property loss.

[Note]: 1. “Harm” means injury, burn and electric shock which need long-term treatment but need no hospitalization

2. “Property loss” means loss of properties and materials.

■ Icon description

Icon	Meaning
	It indicates forbidding. The forbidden subject-matter is indicated in the icon or by images or characters aside.
	It indicates compulsory implementation. The compulsory subject-matter is indicated in the icon or by images or characters aside.

Warning

Warning	Delegate installation	Please entrust the distributor or professionals to install the unit. The installers must have the relevant know-how. Improper installation performed by the user without perm ission may cause fire, electric,shock, personal injury or water leakage.

Usage Warning	Forbid	Do not spray flammable aerosol to the wire controller directly. Otherwise, fire may occur.
	Forbid	Do not operate with wet hands or let water enter the wire controller. Otherwise, electric shock may occur.

12. SUMMARIZE

Usage condition:

1. Power supply: 5V DC.
2. Operation temperature:
   -5°F（-15°C）~ +109°F(+43°C).
3. Operation humidity: 40%-90%, RH.

13. FUNCTION SUMMARY

Main function:

1. Connecting to indoor unit by A, B, C, D, E termina.;
2. Button setting action mode.
3. LCD display.
4. Timer for rest time.

14. NAME AND FUCTION OF INDICATORS ON THE CONTROLLER

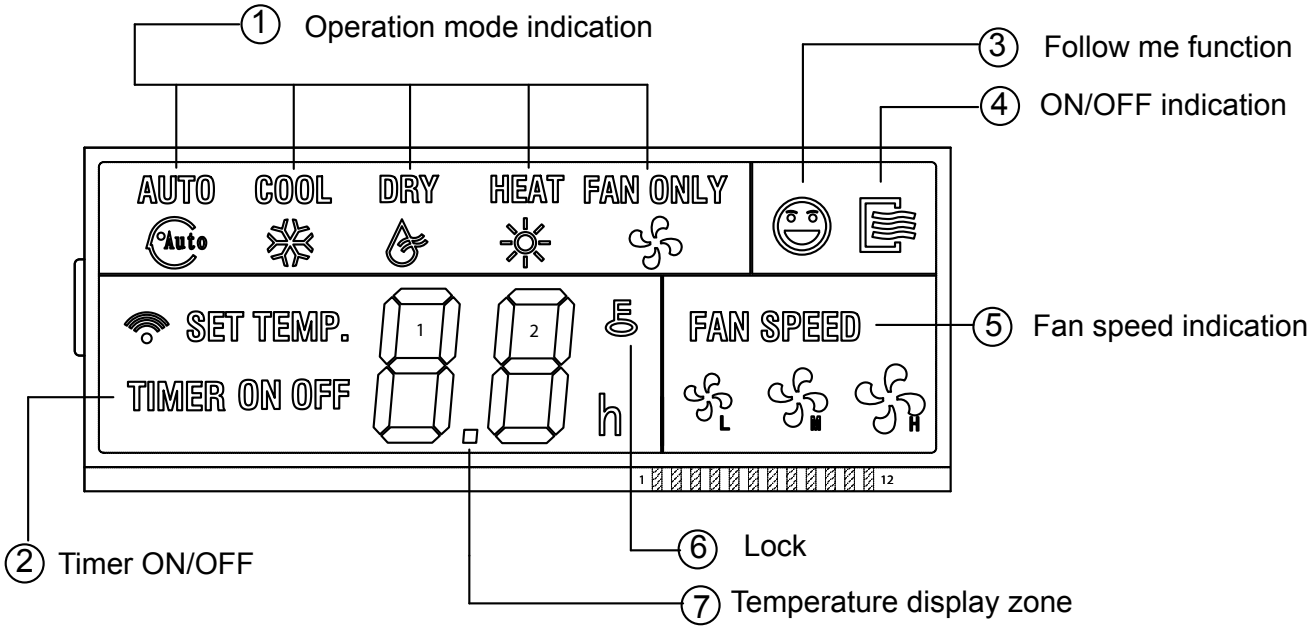

① Operation mode indication:

When press " MODE " button, the following mode can be selected in circle. Auto →Cool →Dry→Heat→Fan only→Auto. For cooling only model,heat mode is skipped.

② Timer :

When adjust setting on time or only on time is set, the "ON" is lighted.

When adjust setting off time or only off time is set , the "OFF" is lighted. If on and off timer are both set, the"ON" and "OFF"are both lighted.

③ Follow me function:

There is a temperature sensor inside the wire controller, after setting temperature, it will compare the two temperatures, and the space of wire controller will be

the same as setting temperature. It is available under cooling, heating, auto mode.

④ ON/OFF indication :

When it is on, the icon display, otherwise it is extinguished.

⑤ Fan speed indication :

There are four fan modes : low, middle, high, auto. For some models, no middle fan then the middle fan is seen as high speed.

⑥ Lock:

When the " LOCK " button is pressed, the icon appear and other buttons is unable, press again, the icon disappear.

⑦ Temperature display zone:

Generally it displays setting temperature, it can be adjusted by press temperature button ▲ and ▼. But in fan mode, no display here.

15. INSTALLATION METHOD

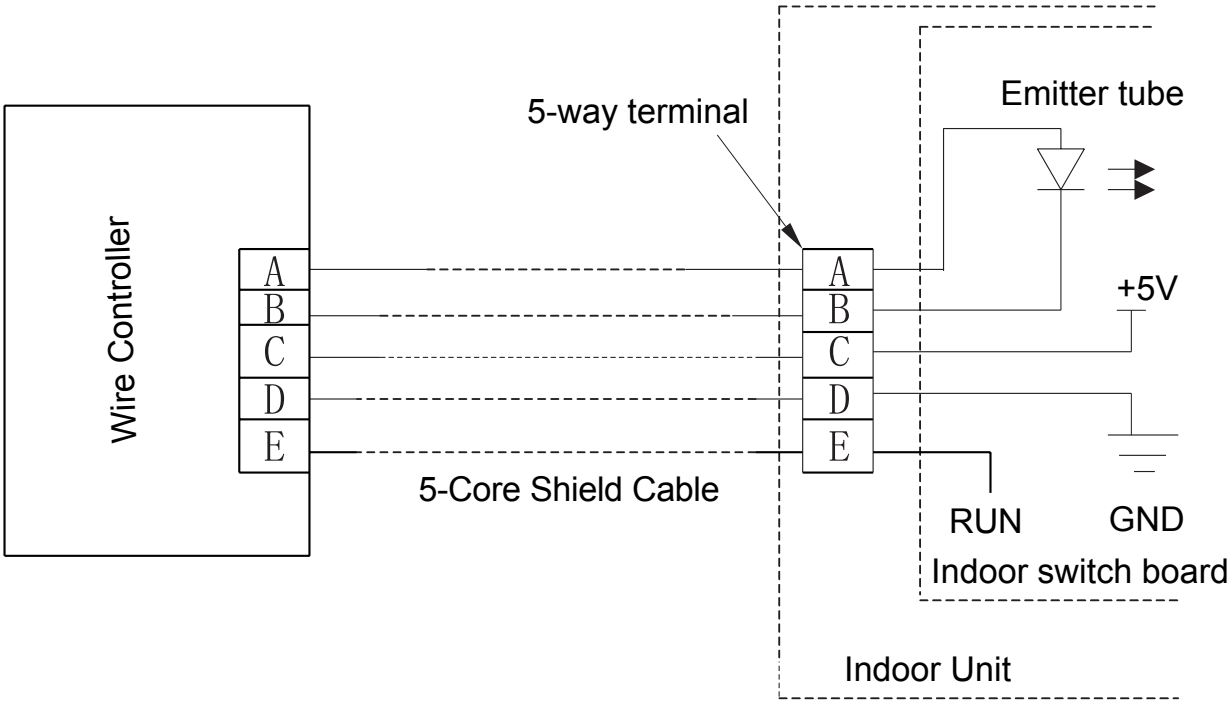

When a wire controller is needed, a small 5-way terminal should be added,fix an infra-red emitter with gumwater near the receiver on the switch board. Connect its anode and cathode to A and B,and +5V, GND, RUN to C, D, E on the switch board.

16. NAME AND OPERATION OF THE BUTTON ON THE WIRE CONTROLLER

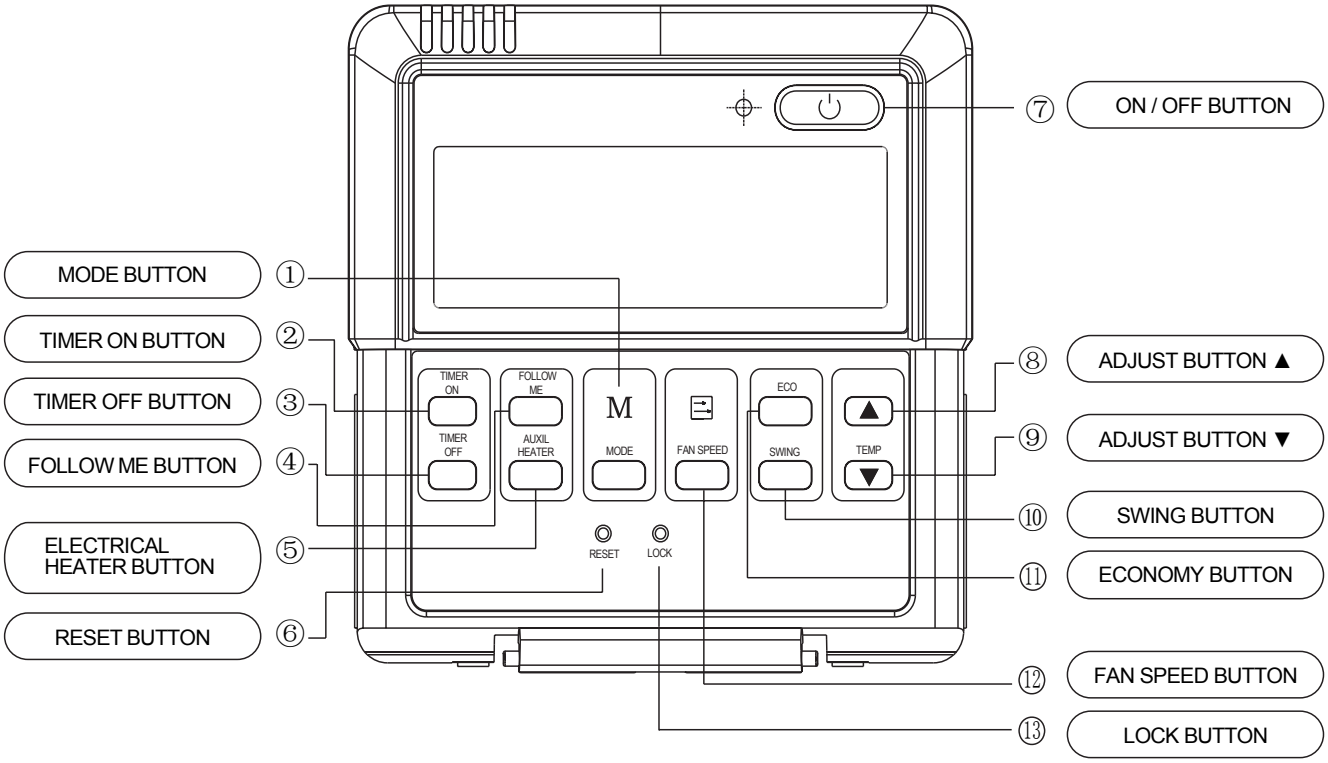

NOTE

All the pictures in this manual are for explanation purpose only. There may be slightly different from the wire controller you purchased(depend on model). The actual shape shall prevail.

① Mode botton:

When press this botton,the operation mode change as the following sequence:

→AUTO → COOL→DRY→HEAT→FAN

Remark: For the cooling only model, the heating mode is skipped.

② Timer on button :

Press this button, timer on function is active. Then every press, the time increase 0.5h, after 10h, 1h increasement after each press. If cancel this Function, just set it to "0.0" .

③ Timer off button:

Press this button, timer off function is active.Then every press, the time increase 0.5h, after 10h, 1h increasement after each press. If cancel this function, just set it to "0.0" .

④ Follow me button :

When under cool, heat and auto mode, press this button, follow me function is active. Pressing the ON/OFF button or MODE button will not cancel the Follow me feature. This function is disable when the unit is off or under DRY or FAN mode. Pressing the FOLLOW ME button again will cancel the follow me feature.

⑤Electrical heater button :

If press this button in heat mode, electrical heater function become ineffective.

⑥ Reset button(hidden):

Use a 1mm stick to press in the little hole, then the current setting is canceled. The wire controller enter into original state.

⑦ON/OFF button:

When in off state, press this button, the indicator is on, the wire controller enter into on state, and send setting information to in door Pcb. When in on state,press this button, the indicator is off, and send instruction. If timer on or timer off has been set, it concel this setting then send instruction to stop the machine.

⑧ Adjust button ▲:

Set indoor temperature up. If press and hold on, it will increase at 1°F(1°C) per 0.5 second.

⑨ Adjust button ▼ :

Set indoor temperature down. if press and hold on, it will decrease at 1°F(1°C) per 0.5 second.

⑩ Swing button:

First press, start swing function;second press, stop swing. (Match to some model with swing function).

⑪ Economy operation button :

press this button, the indoor unit operates in economy mode, press again, exit this mode (it may be ineffective for some models)

12 Fan speed button:

⑫ press this button consecutively, the fan speed will circle as follow:

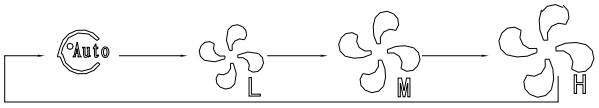

⑬ Lock button(hidden):

When you push the LOCK button, all current settings are locked in and the wire controller does not accept any operation except that of the LOCK button. Use the lock mode when you want to prevent setting from being changed accidentally or play fully. Push the LOCK button again when you want to cancel the LOCK mode.

17. USING METHOD

AUTOMATIC OPERATION

Connect to power,indoor operation lamp flash.

1. Press "MODE" button, select " AUTO " ;
2. Press the button "▲" and "▼", set temperature you want, generally it is among 62°F(17°C)~86°F(30°C);
3. Press " ON/OFF" button, operation lamp is on, the air-conditioner work in auto mode, indoor fan is auto, and can not be changed. Auto is displayed on LCD. Press ON/OFF button again to stop.
4. Economy operation is valid in auto mode.
5. In event of power interruption such as a blackout, the air conditioner stops once. But it restarts automatically and performs previous operation when the power supply is resumed.

COOL/HEAT/FAN MODE OPERATION

1. Press "MODE" button, select "COOL" , "HEAT" or "FAN ONLY" mode.
2. Press temperature adjust button to select setting temp.
3. Press "FAN SPEED" button to select high/mid/low/auto.
4. Press "ON/OFF" button, indoor unit operation lamp on, it works in selected mode. Press "ON/OFF" button again, it stops to work.

Remark: When in fan mode, no temperature can be set.

DRY OPERATION

1. Press " MODE " button, select " DRY " mode.
2. Press temperature adjust button to select setting temp.
3. Press " ON/OFF " button, indoor unit operation lamp on, it works in dry mode. Press ON/OFF button again, it stops to work.
4. In dry mode, economy operation and fan speed are ineffective.

TIMER SETTING

Timer on only:

1. Press " TIME ON " button, it display "SET" on LCD, and display " H " and "ON" , it is waiting for timer on setting.
2. Press " timer " on button repeatedly to adjust time setting.
3. If press this button and hold on, the time will increase at 0.5h, after 10h, it increase at 1h.
4. After setting 0.5 second, the wire controller send timer on information, it is finished.

Timer off only:

1. Press "TIME OFF " button, it display "SET" on LCD, and display " H " and ON, it is waiting for timer on setting.
2. Press "TIME OFF" button repeatedly to adjust time setting.
3. If press this button and hold on , the time will increase at 0.5h, after 10h, it increase at 1h.
4. After setting 0.5 second, the wire controller send timer off information, it is finished.

TIMER ON AND TIMER OFF BOTH

1. Set timer on time as the corresponding step1 and 2.
2. Set timer off time as the corresponding step1 and 2.
3. Timer off time must be longer than timer on time.
4. 0.5 second after setting, the wire controller send information.the setting is finished.

CHANGE TIMER

If there is a need of changing timer time, press corresponding button to revise it. If concel timer, change timer time to 0.0.

NOTE

The timer time is relative time,that is delay after setting time(i, e: setting time is 8:05 A,M). So when imer is set, the standard time can not be adjusted.

18. TECHNICAL INDICATION AND REQUIREMENT

EMC and EMI comply with the CE certification requirements.

Copyright 2014 CAC/BDP • 7310 W. Morris St. • Indianapolis, IN 46231

Edition Date: 11/14

Catalog No: 619RD-01OM

Manufacturer reserves the right to change, at any time, specifications and designs without notice and without obligations.

Replaces: New