Installation Instructions

Low Pressure Switch Kit for All Multipoise Condensing Furnaces

KGALP0101KIT

NOTE: Read the entire instruction manual before starting the installation.

SAFETY CONSIDERATIONS

Installing and servicing heating equipment can be hazardous due to gas and electrical components. Only trained and qualified personnel should install, repair, or service heating equipment.

Untrained personnel can perform basic maintenance functions such as cleaning and replacing air filters. All other operations must be performed by trained service personnel. When working on heating equipment, observe precautions in the literature, on tags, and on labels attached to or shipped with the unit, and other safety precautions that may apply.

Follow all safety codes. In the United States, follow all safety codes including the National Fuel Gas Code (NFGC) NFPA No. 54-2002/ANSI Z223.1-2002. In Canada, refer to the National Standard of Canada, Natural Gas and Propane Installation Codes (NSCNGPIC), CAN/CGA-B149.1 and .2-M00.

Wear safety glasses and work gloves. Have a fire extinguisher available during start-up, adjustment procedures, and service calls.

Recognize safety information. This is the safety-alert symbol ⚠ . When you see this symbol on the furnace and in instructions or manuals, be alert to the potential for personal injury.

Understand the signal words DANGER, WARNING, CAUTION, and NOTE. The words DANGER, WARNING, and CAUTION are used with the safety-alert symbol. DANGER identifies the most serious hazards which **will** result in severe personal injury or death. WARNING signifies hazards which **could** result in personal injury or death. CAUTION is used to identify unsafe practices which **would** result in minor personal injury, or product and property damage. NOTE is used to highlight suggestions which **will** result in enhanced installation, reliability, or operation.

⚠ WARNING: This conversion kit shall be installed by a qualified service agency in accordance with the manufacturer's instructions and all applicable codes and requirements of the authority having jurisdiction. If the information in these instructions is not followed exactly, a fire, explosion, or production of carbon monoxide may result causing property damage, personal injury, or loss of life. The qualified service agency is responsible for the proper installation of this furnace with this kit. The installation is not proper and complete until the operation of the converted appliance is checked as specified in the manufacturer's instructions supplied with the kit.

⚠ AVERTISSEMENT: Cette trousse de conversion ne doit être installée que par le représentant d'un organisme qualifié et conformément aux instructions du fabricant et à tous les codes et exigences pertinents de l'autorité compétente. Les instructions du présent guide doivent être suivies afin de réduire au minimum au risque d'incendie ou d'explosion de dommange matériels, de blessure ou de mort. L'organisme qualifié responsable de l'installation adéquate de cette trousse. L'installation n'est pas adéquate ni complète tant que le bon fonctionnement de l'appereil converti n'a pas été vérfié selon les instructions du fabricant fornies avec la trousse.

INTRODUCTION

This instruction covers the installation of kit KGALP0101KIT for applying a Low Gas Pressure Switch (LGPS) to furnaces listed in the section below. This switch is to be used in conjunction with existing propane kit that converted furnaces from natural gas usage to propane gas usage.

Models 58MCA, 58MSA, 58MXA, 340MAV, 345MAV, 350MAV, 490AAV, PG9MAA, 58MVP, 58MTA, 355MAV, and 352MAV, 4-Way Multipoise, Hot Surface Ignition, Condensing Furnaces. This kit is designed for use in furnaces with 40,000 through 140,000 Btuh gas input rates.

Form: AG-GALP-01 Cancels: New Printed in U.S.A. 1-04 Catalog No. 63GA-LP0

Table 1—Kit Contents

DESCRIPTION	PART NO.	QUANTITY
Low Gas Pressure Switch (Propane) (LGPS))	HK02LB008	1
Brass coupling (1/8 in.)	CA52JZ103	1
Male x Female X Female Tee (1/8 in.)	CA52JZ103	1
Splice Connector (1/4 in. Male, Both Ends)	66175D55	1
Splice Connector (3/16 in. Male, Both Ends)	HY89SC047	1
Orange Wire Assembly (18 in.)	W182X23--04--018	2
Orange Wire Assembly (12 in.)	W182X66--04--012	1
Yellow Wire Assembly (6 in.)	W182Y66--11--006	1
Yellow Wire Assembly (14 in.)	W182Y66--11--014	1
Yellow Wire Assembly (16 in.)	W182Y66--23--016	1
Wire Tie	HY76TB125	1
Installation Instructions	AG-GALP-01	1

This kit is designed for use in the furnaces listed above. The gas valve will be a White-Rodgers 36E or 36F series gas valve with either an electric control switch or a manual control knob.

⚠ WARNING: Improper installation, adjustment, alteration, service, maintenance, or use can cause carbon monoxide poisoning, explosion, fire, electrical shock, or other conditions, which could result in personal injury or death. Consult your distributor or branch for information or assistance. The qualified installer or agency must use only factory-authorized kits or accessories when servicing this product. Failure to follow instructions could result in serious injury, death or property damage.

⚠ WARNING: Gas supply MUST be shut off before disconnecting electrical power and proceeding with conversion. Failure to follow this warning could result in serious injury, death or property damage.

⚠ ADVERTISSEMENT: L'offre de gaz DOIT être coupée avant de déconnecter le courant électrique et de procéder à la conversion. L'échec pour suivre cet avertissement a pour résultat la blessure sérieuse, mort ou dommage de propriété.

DESCRIPTION AND USAGE

See Table 1 for kit contents. To accommodate many different furnace models, more parts are shipped in kit than will be needed to complete conversion. When installation is complete, discard extra parts.

INSTALLATION

DIRECT-VENT, MULTIPOISE, HOT-SURFACE IGNITION, SINGLE-STAGE, TWO-STAGE AND VARIABLE-SPEED CONDENSING FURNACES

SINGLE-STAGE MODELS			TWO-STAGE MODELS		VARIABLE SPEED MODELS	
58MXA	350MAV	PG9MAA	58MTA	352MAV	58MVP	355MAV
58MCA	340MAV	490AAV	-	-	-	-
58MSA	345MAV	-	-	-	-	-

PROCEDURE 1—INSTALL LOW GAS PRESSURE SWITCH (LGPS)-ALL FURNACES

⚠ CAUTION: Label all wires prior to disconnection when servicing controls. Wiring errors can cause improper and dangerous operation.

⚠ ATTENTION: Lors des opérations d'entretien des commandes, étiqueter tous les fils avant de les déconnecter. Toute erreur de câblage peut être une source de danger et de panne.

Furnace gas input rate on rating plate is for installations at altitudes up to 2000 ft. In the U.S.A., the input rating for altitudes above 2000 ft must be reduced by 2 percent for each 1000 ft above sea level.

In Canada, the input rating must be derated by 5 percent for altitudes of 2000 ft to 4500 ft above sea level.

NOTE: The inlet gas pipe must be disconnected from valve so pressure switch can be installed.

NOTE: Use propane-gas-resistant pipe dope on all connections to prevent gas leaks. DO NOT use Teflon tape.

1. Be sure main gas and electric supplies to furnace are off.
2. Remove 1/8-in. pipe plug from inlet pressure tap on gas valve. (See Fig. 1 or 2.) DO NOT DISCARD PLUG!

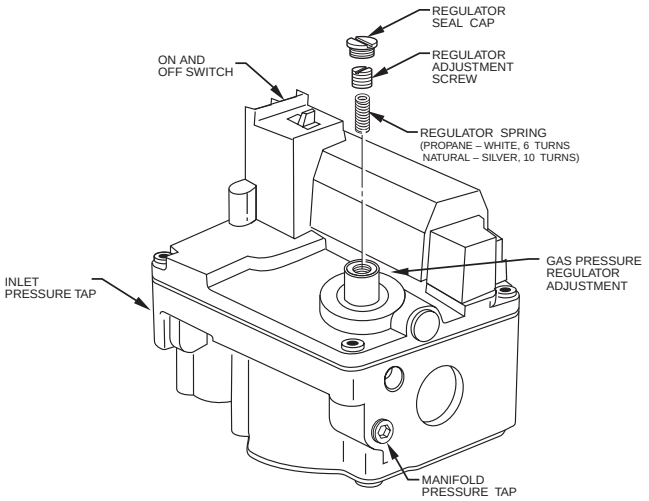

Fig. 1—Single-Stage Gas Valve

3. Apply pipe dope sparingly to the ends of the 1/8-in. brass male coupling (part CA52JZ103 - provided in kit) and install it in 1/8-in. tapped opening in gas valve inlet pressure-tap. Tighten fitting with a small wrench.
4. Attach the female end of the female x female x male brass tee (part CA52JZ103 - provided in kit). Tighten fitting with a small wrench so the male portion of the tee points out from the furnace.
5. Apply pipe dope sparingly to male end of brass tee. Install propane low gas pressure switch (part HK02LB008 - provided in kit) on nipple. After switch has been finger tightened, use small wrench on base of pressure switch for final tightening. When pressure switch is tight, switch terminals should point as shown in Fig. 3A and 3B relative to gas valve and clear control door.
6. Connect a manometer to open end of tee installed in gas valve.

PROCEDURE 2—CHECK INLET GAS PRESSURE

NOTE: This switch is to be used only when inlet gas pressure is between 11.0-in. wc and 13.6-in. wc. Verify manometer is connected to inlet pressure tap on the tee of gas valve.

1. Turn on furnace power supply.
2. Turn gas supply manual shutoff valve to ON position.
3. Turn furnace gas valve switch to ON position.
4. For single-stage models, jumper R to W.
5. For two-stage and variable speed models, install a jumper wire between W/W1 and W2 to force unit into high-heat operation.

PROCEDURE 3—SET GAS FURNACE INPUT RATE

The gas **input-rate** for propane is the same as for natural gas. See furnace-rating plate (See Fig. 4) for input rate. The input rate for propane is determined by manifold pressure and orifice size. The gas-valve regulator must be set for low heat first and then set for high heat on Two-Stage and variable speed furnaces. The gas valve regulator must also be adjusted on single-stage furnaces.

NOTE: Manifold pressure must always be measured with the burner enclosure front removed. (See Fig. 6) Furnace gas input rate on rating plate is for installations at altitudes up to 2000 ft.

In the U.S.A., the input rating for altitudes above 2000 ft must be reduced by 2 percent for each 1000 ft above sea level. In Canada, the input rating must be derated by 5 percent for altitudes of 2000 ft to 4500 ft above sea level. The Conversion Kit Rating Plate accounts for high altitude derate.

PROCEDURE 4—MODIFY PRESSURE SWITCH WIRING

A. Single-Stage Furnaces

(Refer to furnace wiring diagram or Fig. 5 for typical wiring diagram.)

1. Disconnect yellow wire from pressure switch (PRS) on furnace inducer housing. Attach wire to C terminal on low gas pressure switch (LGPS).
2. Connect insulated terminal of 16-in. yellow wire (provided in kit) to NO terminal on low gas pressure switch (LGPS). Connect other (flag style insulated) end to the C terminal on furnace pressure switch (PRS) located on inducer housing.
3. Route wires along wire harness. Secure with wire tie provided in kit. Go to Procedure 5.

B. Two-Stage and Variable Speed Furnaces

(Refer to furnace wiring diagram.)

1. Disconnect orange wire from low-heat pressure switch LPS on inducer housing.
2. Connect un-insulated terminal of 1 orange wire (provided in kit, if required for length) to splice connector. Connect other end to C terminal on low gas pressure switch LGPS.
3. Connect insulated terminal of second orange wire (provided in kit) to NO terminal on low gas pressure switch LGPS. Connect other end to pressure switch LPS located on inducer housing.

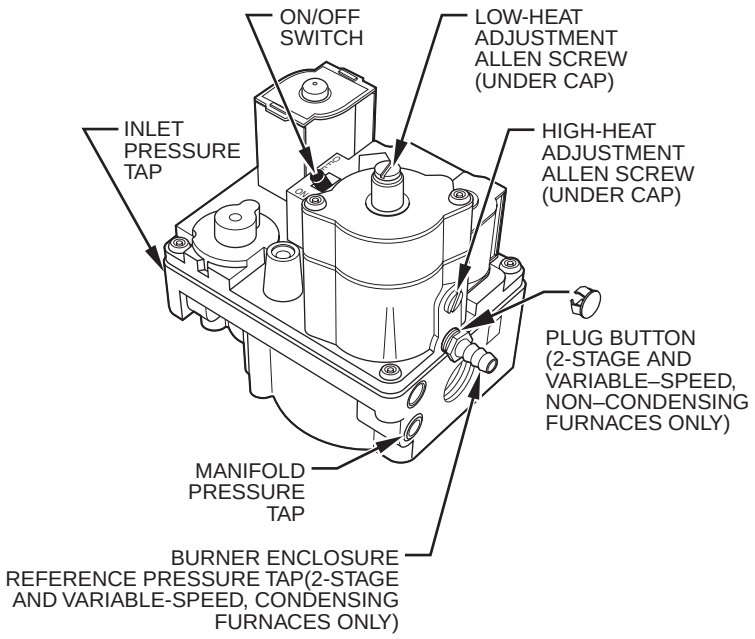

A01069

Fig. 2—Two-Stage Gas Valve

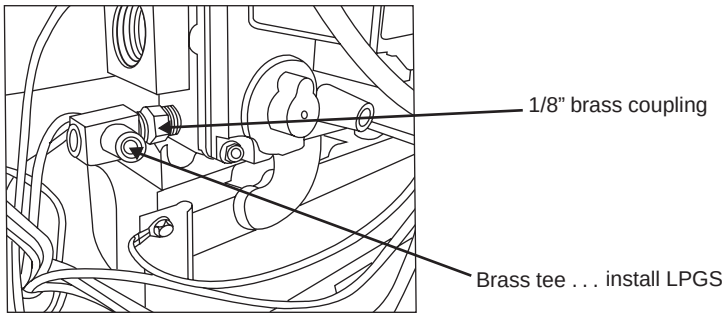

A02198

Fig. 3a—Gas Valve Inlet Pressure Trap

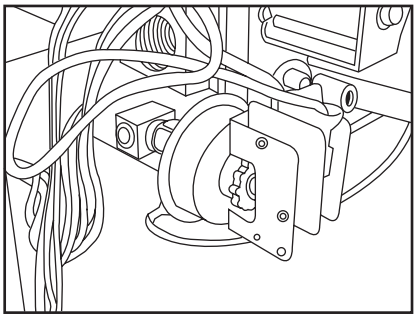

A02211

Fig. 3b—LGPS Installed

4. Route orange wires along wire harness. If possible, secure with wire tie provided in kit. Go to Procedure 5.

PROCEDURE 5—CHECK FURNACE OPERATION AND MAKE NECESSARY ADJUSTMENTS

1. Turn gas supply manual shutoff valve to ON position.
2. Turn furnace gas valve switch to ON position.
3. Check all threaded pipe connections for gas leaks.
4. Turn on furnace power supply.

⚠ WARNING: NEVER use matches, candles, flame, or other sources of ignition to check for gas leakage. Use a soap-and-water solution to check for gas leaks. Failure to follow this warning could result in fire, explosion, personal injury, or death.

---

5. Observe unit operation through 2 complete heating cycles. See sequence of operation in furnace Installation, Start-Up, and Operating Instructions.
6. Set room thermostat to desired temperature.

CONVERSION KIT RATING PLATE - CARRIER CORP.

THIS APPLIANCE HAS BEEN CONVERTED TO USE PROPANE GAS FOR FUEL. REFER TO KIT INSTRUCTIONS FOR CONVERSION PROCEDURES. USE PARTS SUPPLIED BY CARRIER CORPORATION AND INSTALLED BY QUALIFIED PERSONNEL. SEE EXISTING RATING PLATE FOR APPLIANCE MODEL NO. AND INPUT RATING.

NOTE: Furnace gas input rate on rating plate is for installations up to 2000 ft above sea level. In U.S.A. the input rating for altitudes above 2000 ft must be derated by 2% for each 1000 ft above sea level. In Canada the input rating must be derated by 5% for altitudes of 2000 ft to 4500 ft above sea level.

KIT NO. KGANP2901ALL **(SUPERSEDES:** KGANP2701LPS, KGANP2801F80) **FUEL USED: PROPANE GAS** INLET PRESSURE (min - max): 11.0 - 13.6 in. wc

APPLIANCE MODELS		ALTITUDE OF INSTALLATION (FT. ABOVE SEA LEVEL) U.S.A. *								
		0 to 2000	2001 * to 3000	3001 to 4000	4001 to 5000	5001 to 6000	6001 to 7000	7001 to 8000	8001 to 9000	9001 to 10000
340MAV, 345MAV, 350MAV, 490AAV, 58MCA, 58MSA, 58MXA, PG9MAA (All model sizes EXCEPT 140)	Orifice No.	55	55	55	55	1.25mm	1.25mm	1.25mm	1.25mm	1.25mm
	Mnfld Press	10.0	10.0	10.0	10.0	11.0	11.0	11.0	11.0	11.0
340MAV, 350MAV, 490AAV, 58MXA, 58MCA, PG9MAA (140 Model Size ONLY)	Orifice No.	54	54	54	54	54	54	54	54	54
	Mnfld Press	11.0	10.5	10.5	10.0	10.0	10.0	10.0	10.0	10.0
352MAV, 355MAV, 58MTA, 58MVP	Orifice No.	1.25mm	1.25mm	1.25mm	1.25mm	1.25mm	1.25mm	1.25mm	1.25mm	1.25mm
	Mnfld Press High / Low	11.0 / 5.4	11.0 / 5.1	11.0 / 5.1	11.0 / 5.1	11.0 / 5.0	11.0 / 5.0	11.0 / 5.0	11.0 / 4.9	11.0 / 4.9

* For Canadian Installations from 2000 to 4500 ft use U.S.A. column 2001 to 3000 ft. 327697-201 REV. A

A03122

Fig. 4—Conversion Kit Rating Plate

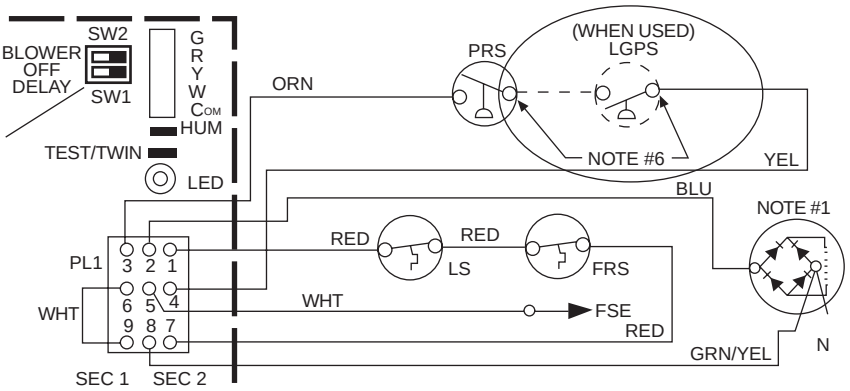

A03123

Fig. 5—Typical Wiring Diagram Showing LGPS Installed

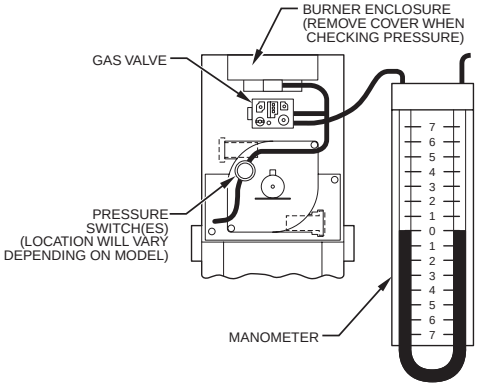

A01070

Fig. 6—Adjusting Manifold Pressure (Manifold Attachment)

PROCEDURE 6—CHECK LOW GAS PRESSURE SWITCH OPERATION

The newly installed low gas pressure switch is a safety device used to guard against adverse burner operating characteristics that can result from low gas supply pressure. Switch opens at not less than 6.5″ w.c. and closes at not greater than 10.2″ w.c.

This switch also prevents operation when propane tank level is low which can result in gas with a high concentration of impurities, additives, and residues that have settled to bottom of tank. Operation under these conditions can cause harm to the heat exchanger system. This normally open switch closes when gas is supplied to gas valve under normal operating pressure. The closed switch completes control circuit. Should an interruption or reduction in gas supply occur, the gas pressure at switch drops below low gas pressure switch setting, and switch opens. Any interruption in control circuit (in which low gas pressure switch is wired) quickly closes gas valve and stops gas flow to burners.

When normal gas pressure is restored, system must be electrically reset to re-establish normal heating operation.

Before leaving installation, observe unit operation through 2 complete heating cycles. During this time, turn gas supply to gas valve off just long enough to completely extinguish burner flame, then instantly restore full gas supply. To ensure proper low gas pressure switch operation, observe that there is no gas supply to burners until after hot surface igniter begins glowing.