CA13NA 018–060
Base Series Air Conditioner with Puron® Refrigerant

Carrier
turn to the experts™

Product Data

Carrier's CA13 has been designed utilizing Carrier's Puron refrigerant. The environmentally sound refrigerant allows you to make a responsible decision in the protection of the earth's ozone layer.

This product has been designed and manufactured to meet Energy Star® criteria for energy efficiency when matched with appropriate coil components. Refer to the combination ratings in the Product Data for system combinations that meet Energy Star® guidelines.

INDUSTRY LEADING FEATURES / BENEFITS

Efficiency

- 13.0 SEER / 10.9 - 11 EER (based on tested combination)
- Microtube Technology™ refrigeration system
- Energy Star® combinations

Reliability

- Puron® refrigerant - environmentally sound, won't deplete the ozone layer and low lifetime servce cost.
- Scroll compressor
- Internal pressure relief valve
- Internal thermal overload
- Filter drier

Durability

WeatherArmor™ protection package:

- Solid, durable sheet metal construction
- Dense wire coil guard

Applications

- Long-line - up to 250 feet (76.20 m) total equivalent length, up to 200 feet (60.96 m) condenser above evaporator, or up to 80 ft. (24.38 m) evaporator above condenser (See Longline Guide for more information.)
- Low ambient (down to -20°F/-28.9°C)) with accessory kit

NOTE: Ratings contained in this document are subject to change at any time. Always refer to the AHRI directory (www.ahridirectory.org) for the most up-to-date ratings information.

PRODUCT NUMBER NOMENCLATURE

CA13 — **13 SEER Air Conditioner with Puron Refrigerant**

N — **Electrical Supply**
N – 208/230–60–1

A — **A – Puron**

018 — **Nominal Capacity**
018 – 1–1/2 Ton
024 – 2 Tons
030 – 2–1/2 Tons
036 – 3 Tons
042 – 3–1/2 Tons
048 – 4 Ton
060 – 5 Ton

00G — **00G** – Variations

B — **Variations**

A — **Series**

Puron™ the environmentally sound refrigerant

AHRI CERTIFIED™ www.ahridirectory.org

Use of the AHRI Certified TM Mark indicates a manufacturer's participation in the program For verification of certification for individual products, go to www.ahridirectory.org.

c UL US

ENERGY STAR

This product has been designed and manufactured to meet Energy Star® criteria for energy efficiency when matched with appropriate coil components. However, proper refrigerant charge and proper air flow are critical to achieve rated capacity and efficiency. Installation of this product should follow all manufacturing refrigerant charging and air flow instructions. **Failure to confirm proper charge and air flow may reduce energy efficiency and shorten equipment life.**

A-WEIGHTED SOUND POWER (dBA)

UNIT SIZE – SERIES	Standard Rating (dBA)	TYPICAL OCTAVE BAND SPECTRUM (dBA without tone adjustment)						
		125	250	500	1000	2000	4000	8000
018–A	71	49.5	59.0	63.0	66.5	62.5	58.5	54.0
024–A	73	50.5	61.0	67.0	68.0	65.0	60.0	55.5
030–A	72	52.0	61.5	65.5	66.5	64.5	59.5	54.5
036–C	74	53.5	63.5	68.5	69.5	67.0	65.0	58.5
042–A	75	56.0	64.5	69.5	71.0	66.0	64.0	59.0
048–C	76	54.0	63.0	69.5	71.5	70.0	66.0	58.5
060–C	79	57.5	67.0	72.0	75.0	72.5	68.0	61.0

NOTE: Tested in compliance with AHRI 270–2008 (not listed with AHRI)

A-WEIGHTED SOUND POWER (dBA) WITH SOUND SHIELD

UNIT SIZE – SERIES	Standard Rating (dBA)	TYPICAL OCTAVE BAND SPECTRUM (dBA without tone adjustment)						
		125	250	500	1000	2000	4000	8000
018–A	70	53.5	60.0	62.0	65.5	62.0	57.5	52.5
024–A	73	53.0	62.0	67.5	68.0	65.0	60.0	53.5
030–A	71	54.0	61.5	65.5	66.0	63.5	58.5	52.0
036–C	74	54.0	63.5	68.0	69.0	66.5	64.0	58.5
042–A	74	55.5	64.0	69.0	69.5	65.5	63.5	57.5
048–C	76	55.0	63.0	69.5	71.0	68.5	65.0	58.0
060–C	79	57.5	68.0	72.5	74.5	72.5	68.0	60.5

NOTE: Tested in compliance with AHRI 270–2008 (not listed with AHRI)

METERING DEVICE

UNIT SIZE – SERIES	INDOOOR	REQUIRED SUBCOOLING °F (°C)
18–A	TXV*	10 (5.6)
24–A		10 (5.6)
30–A		10 (5.6)
36–C		12 (6.7)
42–A		10 (5.6)
48–C		15 (8.3)
60–C		15 (8.3)

* TXV must be ordered separately when indoor coil is not equipped with a TXV. TXV must be hard–shutoff type.

SPECIFICATIONS

UNIT SIZE – SERIES	18–A	24–A	30–A	36–C	42–A	48–C	60–C
ELECTRICAL							
Unit Volts—Hertz—Phase	208/230—60—1						
Operating Voltage Range*	197—253						
Compressor—Rated Load Amps	9.0	13.5	12.8	14.1	17.9	18.8	22.1
Locked Rotor Amps	48.0	58.3	64.0	70.0	112.0	96.0	125.0
Condenser Fan Motor— Full Load Amps	0.5	0.8	0.8	1.4	1.1	1.4	1.4
Min Unit Ampacity for Wire Sizing	11.8	17.6	16.8	18.7	23.5	24.9	29.0
Min Wire Size (60°/75° Copper) AWG**	14	14	14	14	12	12	10
Max Wire Length (60°/75°) ft (m)‡	66 / 62 (20.1 / 18.9)	44 / 42 (13.4 / 12.8)	46 / 44 (14.0 / 13.4)	41 / 39 (12.5 / 11.9)	52 / 50 (15.8 / 15.2)	50 / 48 (15.2 / 14.6)	69 / 66 (21.0 / 20.1)
Max Branch Circuit Fuse Size†	20	25	25	30	40	40	50
COMPRESSOR AND REFRIGERANT							
Type	Scroll						
Temperature and Current Protection	Internal Line Break						
R–410A Refrigerant— Amount Lb (kg) @ 15 ft (4.6 m)	3.15 (1.43)	3.15 (1.43)	3.67 (1.66)	4.67 (2.12)	6.07 (2.75)	7.00 (3.18)	8.80 (3.99)
Refrigerant Tubes (In. OD) ‡‡Rated Vapor and Maximum Liquid	3/4 and 3/8			7/8 and 3/8			1–1/8 and 3/8
CONDENSER COIL AND FAN							
Coil Face Area (Sq Ft)	8.4	8.4	9.8	12.60	17.3	19.29	15.14
Fan Motor—HP, Type, and RPM	1/12 PSC and 1100	1/10 PSC and 1100		1/4 PSC and 1100	1/5 PSC and 1100	1/4 PSC and 1100	
Volts—Hertz—Phase	208/230—60—1						
Condenser Airflow (CFM)	1700	2000	2000	2500	3000	3400	3400
OPTIONAL EQUIPMENT							
Cycle Protector	KSACY0101AAA						
Start Assist—PTC Type	KAACS0201PTC						
Start Assist—Capacitor/Relay Type	KSAHS1501AAA						
MotorMaster® Control	KSALA0601AAA						
Ball Bearing Fan Motor (RCD)	HC32GE234	HC34GE239		HC38GE219		HC40GE226	
Low–Pressure Switch	KAALP0401PUR						
High–Pressure Switch	KAAHI0501PUR						
Compressor Sound Hood	KSASH1801COP				KSASH0601COP		KSASH2101COP
Time–Delay Relay	KAATD0101TDR						
Low–A.Bmbient Pressure Switch Kit	KSALA0301410						
Winter Start Control	KAAWS0101AAA						
Evaporator Freeze Thermostat	KAAFT0101AAA						
Compressor Crankcase Heater	KAACH1401AAA				KAACH1201AAA		
Liquid Line Solenoid Valve††	KAALS0201LLS						
TXV (Hard Shutoff)††	KSATX0201PUR			KSATX0301PUR		KSATX0401PUR	KSATX0501PUR
Liquid Line Filter Drier	KH43LG073						KH43LG074

N/A – Not applicable in this application.

* Permissible limits of the voltage range at which unit will operate satisfactorily. Operation outside these limits may result in unit failure.

† Time–delay fuse or circuit breaker.

‡ Length shown is as measured 1 way along wire path between unit and service panel for voltage drop not to exceed 2%.

** If wire is applied at ambient greater than 30°C, consult table 310–16 of the NEC (NFPA 70). The ampacity of non–metallic–sheathed cable (NM), trade name ROMEX, shall be that of 60°C conditions, per the NEC (NFPA 70) Article 336–26. If other than uncoated (no–plated), 60 or 75°C insulation, copper wire (solid wire for 10 AWG or smaller, stranded wire for larger than 10 AWG) is used, consult applicable tables of the NEC (NFPA 70).

†† Do not use hard shutoff TXV with liquid solenoid valve.

‡‡ Units are rated with 25 ft (7.6 m) of lineset length. See *Vapor Line Sizing and Cooling Capacity Loss* table when using other sizes and lengths of lineset.

REFRIGERANT PIPING LENGTH LIMITATIONS

Liquid Line Sizing and Maximum Total Equivalent Lengths† for Cooling Only Systems with Puron® Refrigerant:

The maximum allowable length of a residential split system depends on the liquid line diameter and vertical separation between indoor and outdoor units.

See Table below for liquid line sizing and maximum lengths :

Maximum Total Equivalent Length
Outdoor Unit BELOW Indoor Unit

Size	Liquid Line Connection	Liquid Line Diam. w/ TXV	AC with Puron Refrigerant Maximum Total Equivalent Length†: Outdoor unit BELOW Indoor Vertical Separation ft (m)								
			0–5 (0–1.5)	6–10 (1.8–3.0)	11–20 (3.4–6.1)	21–A.B (6.4–9.1)	31–40 (9.4–12.2)	41–50 (12.5–15.2)	51–60 (15.5–18.3)	61–70 (18.6–21.3)	71–80 (21.6–24.4)
018 AC with Puron	3/8	1/4	150	150	125	100	100	75	– –	– –	– –
		5/16	250*	250*	250*	250*	250*	250*	250*	225*	150
		3/8	250*	250*	250*	250*	250*	250*	250*	250*	250*
024 AC with Puron	3/8	1/4	75	75	75	50	50	– –	– –	– –	– –
		5/16	250*	250*	250*	250*	250*	225*	175	125	100
		3/8	250*	250*	250*	250*	250*	250*	250*	250*	250*
030 AC with Puron	3/8	1/4	30	– –	– –	– –	– –	– –	– –	– –	– –
		5/16	175	225*	200	175	125	100	75	– –	– –
		3/8	250*	250*	250*	250*	250*	250*	250*	250*	250*
036 AC with Puron	3/8	5/16	175	150	150	100	100	100	75	– –	– –
		3//8	250*	250*	250*	250*	250*	250*	250*	250*	250*
042 AC with Puron	3/8	5/16	125	100	100	75	75	50	– –	– –	– –
		3/8	250*	250*	250*	250*	250*	250*	250*	250*	150
048 AC with Puron	3/8	3/8	250*	250*	250*	250*	250*	250*	230	160	– –
060 AC with Puron	3/8	3/8	250*	250*	250*	225*	190	150	110	– –	– –

*** Maximum actual length not to exceed 200 ft (61 m)**

† Total equivalent length accounts for losses due to elbows or fitting. See the Long Line Guideline for details.

– – = outside acceptable range

Maximum Total Equivalent Length
Outdoor Unit ABOVE Indoor Unit

Size	Liquid Line Connection	Liquid Line Diam. w/ TXV	AC with Puron Refrigerant Maximum Total Equivalent Length†: Outdoor unit ABOVE Indoor Vertical Separation ft (m)							
			25 (7.6)	26–50 (7.9–15.2)	51–75 (15.5–22.9)	76–100 (23.2–A.B. 5)	101–125 (30.8–38.1)	126–150 (38.4–45.7)	151–175 (46.0–53.3)	176–200 (53.6–61.0)
018 AC with Puron	3/8	1/4	175	250*	250*	250*	250*	250*	250*	250*
		5/16	250*	250*	250*	250*	250*	250*	250*	250*
		3/8	250*	250*	250*	250*	250*	250*	250*	250*
024 AC with Puron	3/8	1/4	100	125	175	200	225*	250*	250*	250*
		5/16	250*	250*	250*	250*	250*	250*	250*	250*
		3/8	250*	250*	250*	250*	250*	250*	250*	250*
030 AC with Puron	3/8	1/4	30	– –	– –	– –	– –	– –	– –	– –
		5/16	250*	250*	250*	250*	250*	250*	250*	250*
		3/8	250*	250*	250*	250*	250*	250*	250*	250*
036 AC with Puron	3/8	5/16	225*	250*	250*	250*	250*	250*	250*	250*
		3/8	250*	250*	250*	250*	250*	250*	250*	250*
042 AC with Puron	3/8	5/16	175	200	250*	250*	250*	250*	250*	250*
		3/8	250*	250*	250*	250*	250*	250*	250*	250*
048 AC with Puron	3/8	3/8	250*	250*	250*	250*	250*	250*	250*	250*
060 AC with Puron	3/8	3/8	250*	250*	250*	250*	250*	250*	250*	250*

*** Maximum actual length not to exceed 200 ft (61 m)**

† Total equivalent length accounts for losses due to elbows or fitting. See the Long Line Guideline for details.

– – = outside acceptable range

REFRIGERANT CHARGE ADJUSTMENTS

Liquid Line Size	Puron Charge oz/ft (g/m)
3/8	0.60 (17.74) (Factory charge for lineset = 9 oz / 266.16 g)
5/16	0.40 (11.83)
1/4	0.27 (7.98)

Units are factory charged for 15 ft (4.6 m) of 3/8" liquid line. The factory charge for 3/8" lineset 9 oz. When using other length or diameter liquid lines, charge adjustments are required per the chart above.

Charging Formula:

[(Lineset oz/ft x total length) – (factory charge for lineset)] = charge adjustment

Example 1: System has 15 ft of line set using existing 1/4" liquid line. What charge adjustment is required?

Formula: (.27 oz/ft x 15ft) – (9 oz) = (-4.95) oz.

Net result is to remove 4.95 oz of refrigerant from the system

Example 2: System has 45 ft of existing 5/16" liquid line. What is the charge adjustment?

Formula: (.40 oz/ft. x 45ft) – (9 oz.) = 9 oz.

Net result is to add 9 oz of refrigerant to the system

CA13NA

LONG LINE APPLICATIONS

An application is considered Long Line, when the refrigerant level in the system requires the use of accessories to maintain acceptable refrigerant management for systems reliability. See Accessory Usage Guideline table for required accessories. Defining a system as long line depends on the liquid line diameter, actual length of the tubing, and vertical separation between the indoor and outdoor units.

For Air Conditioner systems, the chart below shows when an application is considered Long Line.

AC WITH PURON® REFRIGERANT LONG LINE DESCRIPTION ft (m)
Beyond these lengths, long line accessories are required

Liquid Line Size	Units On Same Level	Outdoor Below Indoor	Outdoor Above Indoor
1/4	No accessories needed within allowed lengths	No accessories needed within allowed lengths	175 (53.3)
5/16	120 (36.6)	50 (15.2) vertical or 120 (36.6) total	120 (36.6)
3/8	80 (24.4)	35 (10.7) vertical or 80 24.4) total	80 (24.4)

Note: See Long Line Guideline for details

VAPOR LINE SIZING AND COOLING CAPACITY LOSS

Acceptable vapor line diameters provide adequate oil return to the compressor while avoiding excessive capacity loss. The suction line diameters shown in the chart below are acceptable for AC systems with Puron refrigerant:

Vapor Line Sizing and Cooling Capacity Losses — Puron® Refrigerant 1-Stage Air Conditioner Applications

Unit Nominal Size (Btuh)	Maximum Liquid Line Diameters (In. OD)	Vapor Line Diameters (In. OD)	Cooling Capacity Loss (%) Total Equivalent Line Length ft. (m)								
			26–50 (7.9–15.2)	51–80 (15.5–24.4)	81–100 (24.7–A.B.5)	101–125 (30.8–38.1)	126–150 (38.4–45.7)	151–175 (46.0–53.3)	176–200 (53.6–61.0)	201–225 (61.3–68.6)	226–250 (68.9–76.2)
018 1 Stage AC with Puron	3/8	1/2	1	2	3	5	6	7	8	9	11
		5/8	0	1	1	1	2	2	2	3	3
		3/4	0	0	0	0	1	1	1	1	1
024 1 Stage AC with Puron	3/8	5/8	0	1	2	2	3	3	4	5	5
		3/4	0	0	1	1	1	1	1	2	2
		7/8	0	0	0	0	0	1	1	1	1
030 1 Stage AC with Puron	3/8	5/8	1	2	3	3	4	5	6	7	8
		3/4	0	0	1	1	1	2	2	2	3
		7/8	0	0	0	0	1	1	1	1	1
036 1 Stage AC with Puron	3/8	5/8	1	2	4	5	6	8	9	10	12
		3/4	0	1	1	2	2	3	3	4	4
		7/8	0	0	0	1	1	1	1	2	2
042 1 Stage AC with Puron	3/8	3/4	0	1	2	2	3	4	4	5	6
		7/8	0	0	1	1	1	2	2	2	3
		1 1/8	0	0	0	0	0	0	0	0	0
048 1 Stage AC with Puron	3/8	3/4	0	1	2	3	4	5	5	6	7
		7/8	0	0	1	1	2	2	2	3	3
		1 1/8	0	0	0	0	0	0	0	1	1
060 1 Stage AC with Puron	3/8	3/4	1	2	4	5	6	7	9	10	11
		7/8	0	1	2	2	3	4	4	5	5
		1 1/8	0	0	0	1	1	1	1	1	1

Applications in this area may be long line and may have height restrictions. See the *Residential Piping and Long Line Guideline*.

ACCESSORY USAGE GUIDELINE

ACCESSORY	REQUIRED FOR LOWMBIENT COOLING APPLICATIONS (Below 55°F / 22.8°C)	REQUIRED FOR LONG LINE APPLICATIONS* (Over 80 Ft./24.4 m)	REQUIRED FOR SEA COAST APPLICATIONS (Within 2 miles/3.2 km)
Ball Bearing Fan Motor	Yes†	No	No
Compressor Start Assist Capacitor and Relay	Yes	Yes	No
Crankcase Heater	Yes	Yes	No
Evaporator Freeze Thermostat	Yes	No	No
Hard Shut–Off TXV	Yes	Yes	Yes
Liquid Line Solenoid Valve	No	See Long–Line Application Guideline	No
Low Ambient Kit (Pressure Switch)	Yes	No	No
Support Feet	Recommended	No	Recommended
Winter Start Control	Yes	No	No

* For tubing line sets between 80 and 200 ft. (24.4 and 76.2 m) and/or 20 ft. (6.1 m) vertical differential, refer to Residential Split–System Longline Application Guideline.

† Required for Low Ambient Controller (full modulation feature) and MotorMaster® Control only.

CA13NA

Accessory Description and Usage (Listed Alphabetically)

1. Compressor Start Assist - Capacitor and Relay

Start capacitor and relay gives a ”hard” boost to compressor motor at each start up.

Usage Guideline:

Required for reciprocating compressors in the following applications:

Long line

Low ambient cooling

Hard shut off expansion valve on indoor coil

Liquid line solenoid on indoor coil

Required for single-phase scroll compressors in the following applications:

Long line

Low ambient cooling

Suggested for all compressors in areas with a history of low voltage problems.

2. Compressor Start Assist — PTC Type

Solid state electrical device which gives a ”soft” boost to the compressor at each start-up.

Usage Guideline:

Suggested in installations with marginal power supply.

3. Crankcase Heater

An electric resistance heater which mounts to the base of the compressor to keep the lubricant warm during off cycles. Improves compressor lubrication on restart and minimizes the chance of liquid slugging.

Usage Guideline:

Required in low ambient cooling applications.

Required in long line applications.

4. Cycle Protector

The cycle protector is designed to prevent compressor short cycling. This control provides an approximate 5-minute delay after power to the compressor has been interrupted for any reason, including power outage, protector control trip, thermostat jiggling, or normal cycling.

Suggested in all commercial applications.

5. Evaporator Freeze Thermostat

An SPST temperature actuated switch that stops unit operation when evaporator reaches freeze-up conditions.

Usage Guideline:

Required when low ambient kit has been added.

6. Low Ambient Pressure Switch Kit

A long life pressure switch which is mounted to outdoor unit service valve. It is designed to cycle the outdoor fan motor in order to maintain head pressure within normal operating limits (approximately 100 psig to 225 psig). The control will maintain working head pressure at low ambient temperatures down to 0°F/-17.8°C when properly installed.

Usage Guideline:

A Low Ambient Pressure Switch or MotorMaster® Low Ambient Controller must be used when cooling operation is used at outdoor temperatures below 55°F (12.8°C).

Suggested for all commercial applications.

7. Support Feet

Four stick-on plastic feet that raise the unit 4 in. (101.6 mm) above the mounting pad. This allows sand, dirt, and other debris to be flushed from the unit base, minimizing corrosion.

Usage Guideline:

Suggested in the following applications:

Coastal installations.

Windy areas or where debris is normally circulating.

Rooftop installations.

For improved sound ratings.

8. Thermostatic Expansion Valve (TXV)

A modulating flow-control valve which meters refrigerant liquid flow rate into the evaporator in response to the superheat of the refrigerant gas leaving the evaporator.

Kit includes valve, adapter tubes, and external equalizer tube. Hard shut off types are available.

NOTE: When using a hard shut off TXV with single phase reciprocating compressors, a Compressor Start Assist Capacitor and Relay is required.

Usage Guideline:

Required to achieve AHRI ratings in certain equipment combinations. Refer to combination ratings.

Hard shut off TXV or LLS required in air conditioner long line applications.

Required for use on all zoning systems.

9. Winter Start Control

This control is designed to alleviate nuisance opening of the low-pressure switch by bypassing it for the first 3 minutes of operation.

DIMENSIONS - ENGLISH

UNIT	SERIES	ELECTRICAL CHARACTERISTICS				A	B	C	D	E	F	G	K	L	M	N	P	OPERATING WEIGHT (LBS)	SHIPPING WEIGHT (LBS)	SHIPPING DIMENSIONS (L x W x H)
CA13NA018	A	X	O	O	O	23 1/8"	24 13/16"	3 3/4"	3/4"	4 7/16"	18 1/16"	7 13/16"	2 13/16"	1/2"	12"	11 3/4"	11 7/8"	108	124	24 1/8" X 24 1/8" X 27 3/16"
CA13NA024	A	X	O	O	O	23 1/8"	24 13/16"	3 3/4"	3/4"	4 7/16"	18 1/16"	7 13/16"	2 13/16"	1/2"	12"	11 3/4"	11 7/8"	111	127	24 1/8" X 24 1/8" X 27 3/16"
CA13NA030	A	X	O	O	O	23 1/8"	28 7/16"	3 3/4"	3/4"	4 7/16"	18 1/16"	7 13/16"	2 13/16"	1/2"	12"	11 3/4"	12 1/2"	114	130	24 1/8" X 24 1/8" X 30 5/8"
CA13NA036	C	X	O	O	O	31 3/16"	28 7/16"	3 7/8"	7/8"	6 9/16"	24 11/16"	9 1/8"	2 15/16"	5/8"	16"	15 1/2"	12 3/4"	149	168	32 3/16" X 32 3/16" X 30 5/8"
CA13NA042	A	X	O	O	O	31 3/16"	31 13/16"	3 7/8"	7/8"	6 9/16"	24 11/16"	9 1/8"	2 15/16"	5/8"	16"	15 1/2"	13 3/4"	172	186	32 3/16" X 32 3/16" X 34"
CA13NA048	C	X	O	O	O	31 3/16"	35 3/16"	3 7/8"	7/8"	6 9/16"	24 11/16"	9 1/8"	2 15/16"	5/8"	16"	15 1/2"	14 1/2"	183	197	32 3/16" X 32 3/16" X 37 7/16"
CA13NA060	C	X	O	O	O	31 3/16"	28 7/16"	3 7/8"	7/8"	6 9/16"	24 11/16"	9 1/8"	2 15/16"	5/8"	16"	15 1/2"	12 3/4"	203	218	32 3/16" X 32 3/16" X 30 5/8"
		208-230-1-60	230-1-60	208/230-3-60	460-3-60															

X = YES
O = NO

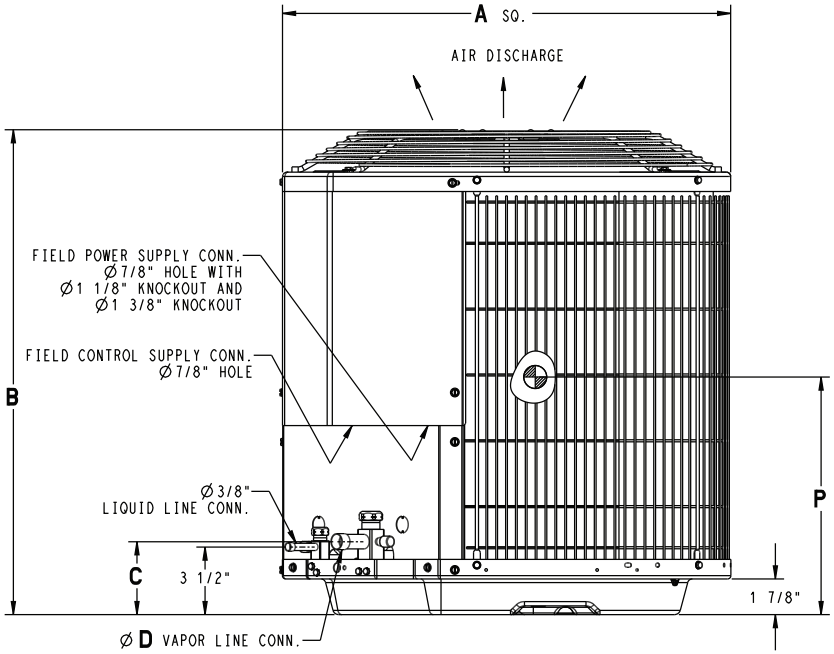

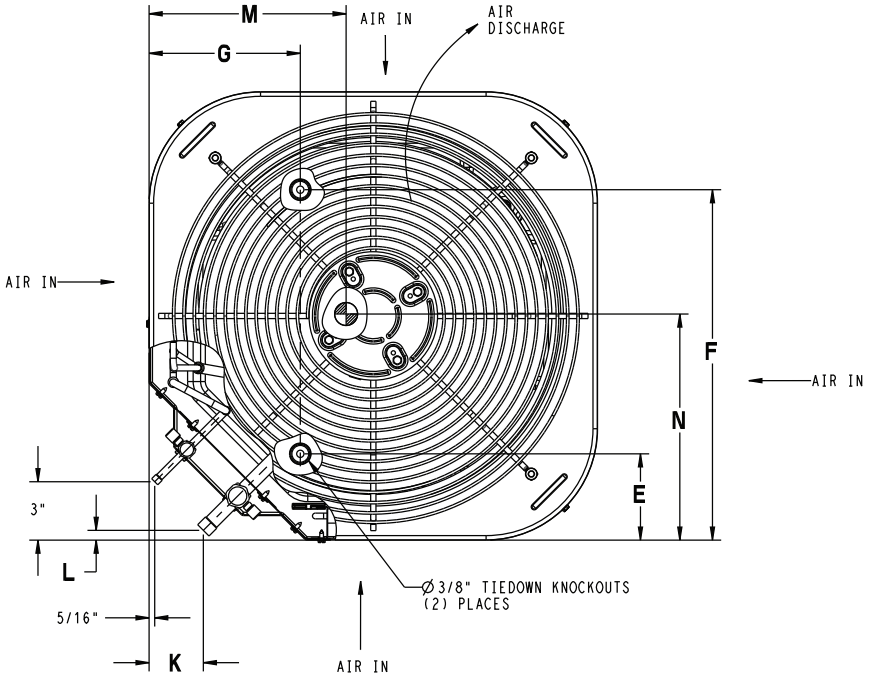

UNIT SIZE	MINIMUM MOUNTING PAD DIMENSIONS
18,24,30	23 1/2" X 23 1/2"
--	26" X 26"
42,48,60	31 1/2" X 31 1/2"
--	35" X 35"

DIMENSIONS - SI

UNIT	SERIES	ELECTRICAL CHARACTERISTICS				A	B	C	D	E	F	G	K	L	M	N	P	OPERATING WEIGHT (Kgs)	SHIPPING WEIGHT (Kgs)	SHIPPING DIMENSIONS (L x W x H)
CA13NA018	A	X	O	O	O	587.4	630.2	95.2	19.0	112.7	458.8	198.4	71.4	12.7	304.8	298.4	301.6	49.0	56.2	612.8 X 612.8 X 690.6
CA13NA024	A	X	O	O	O	587.4	630.2	95.2	19.0	112.7	458.8	198.4	71.4	12.7	304.8	298.4	301.6	50.3	57.6	612.8 X 612.8 X 690.6
CA13NA030	A	X	O	O	O	587.4	722.3	95.2	19.0	112.7	458.8	198.4	71.4	12.7	304.8	298.4	317.5	51.7	59.0	612.8 X 612.8 X 777.9
CA13NA036	C	X	O	O	O	792.2	722.3	98.4	22.2	166.7	627.1	231.8	74.6	15.9	406.4	393.7	323.8	67.7	76.4	817.6 X 817.6 X 777.9
CA13NA042	A	X	O	O	O	792.2	808.0	98.4	22.2	166.7	627.1	231.8	74.6	15.9	406.4	393.7	349.2	78.0	84.5	817.6 X 817.6 X 863.6
CA13NA048	C	X	O	O	O	792.2	893.8	98.4	22.2	166.7	627.1	231.8	74.6	15.9	406.4	393.7	368.3	83.2	89.5	817.6 X 817.6 X 950.8
CA13NA060	C	X	O	O	O	792.2	722.3	98.4	22.2	166.7	627.1	231.8	74.6	15.9	406.4	393.7	323.8	92.3	99.1	817.6 X 817.6 X 777.9
		208-230-1-60	230-1-60	208/230-3-60	460-3-60															

X = YES
O = NO

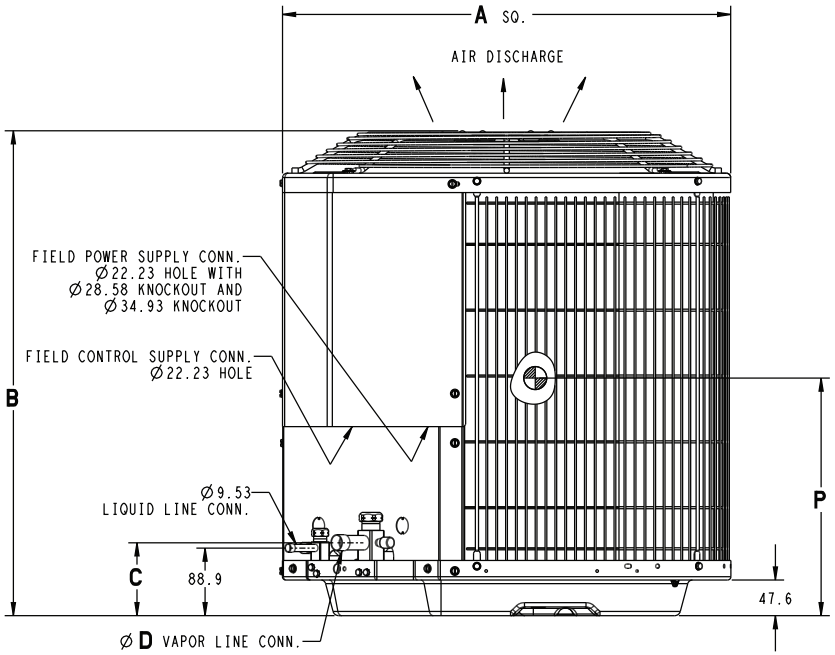

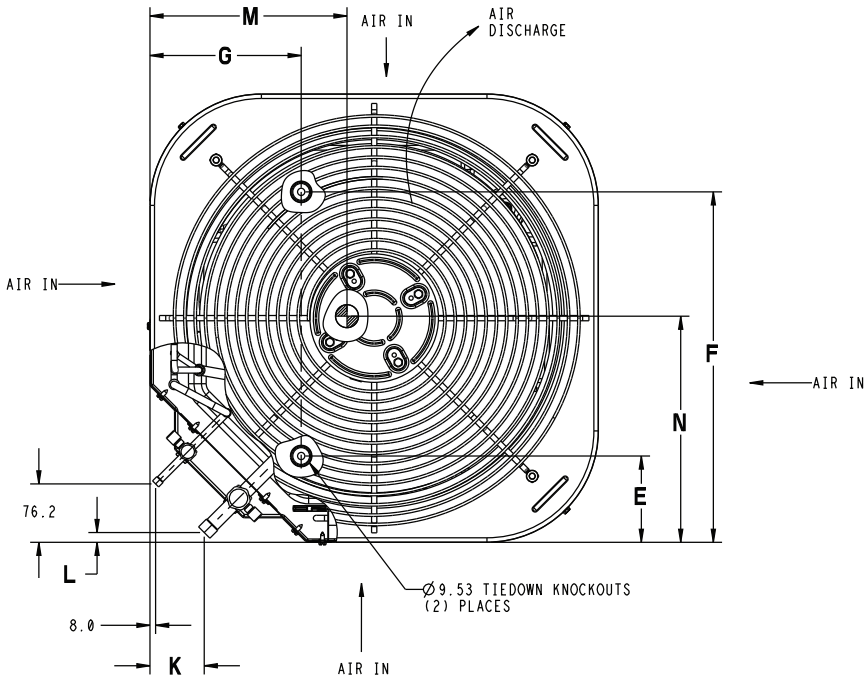

UNIT SIZE	MINIMUM MOUNTING PAD DIMENSIONS
18,24,30	596.9 X 596.9
--	660.4 X 660.4
42,48,60	800.1 X 800.1
--	889.0 X 889.0

CLEARANCES

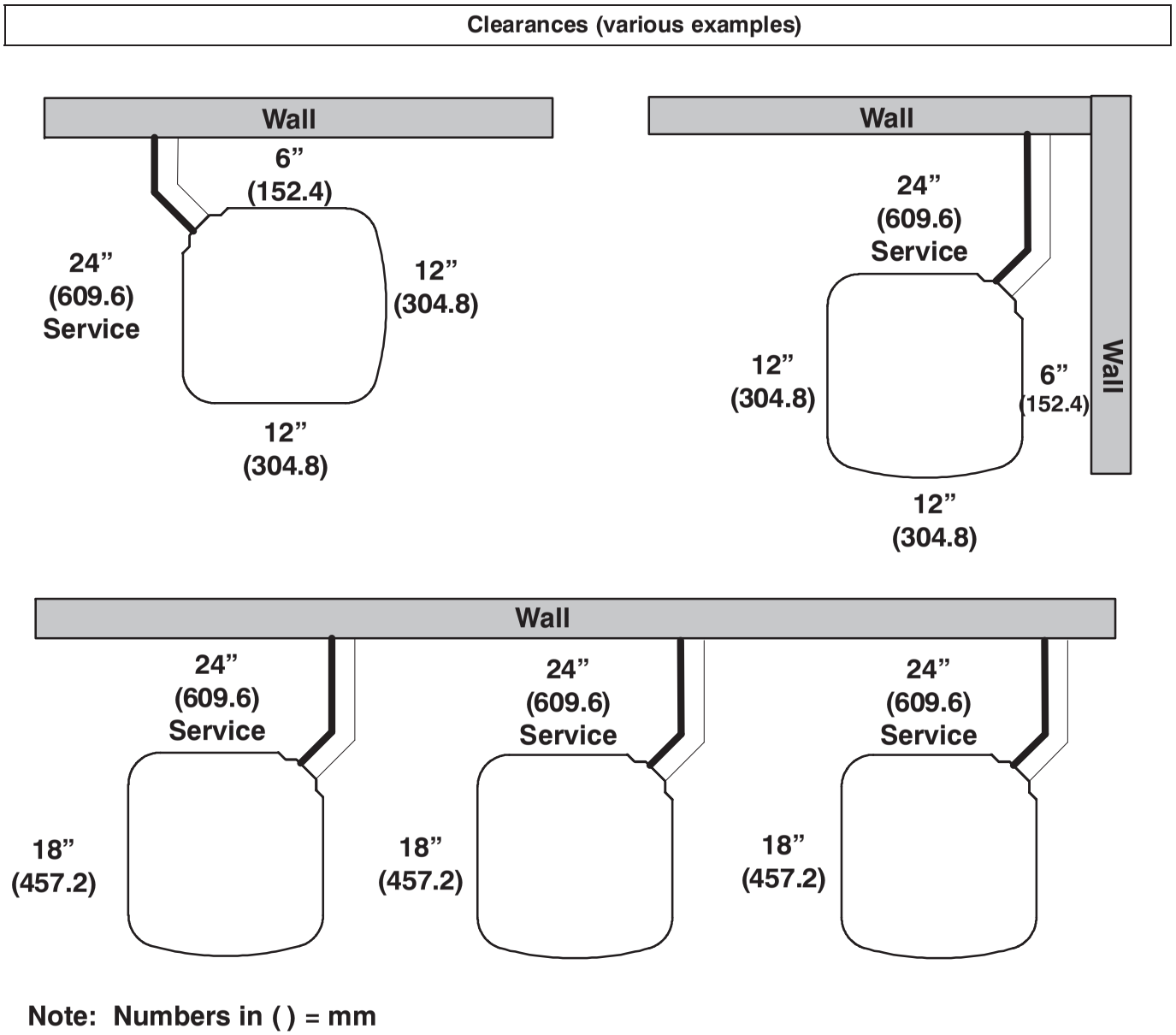

IMPORTANT: When installing multiple units in an alcove, roof well, or partially enclosed area, ensure there is adequate ventilation to prevent re-circulation of discharge air.

CA13NA

TESTED AHRI COMBINATION RATINGS

NOTE: Ratings contained in this document are subject to change at any time.

For AHRI ratings certificates, please refer to the AHRI directory www.ahridirectory.org

Additional ratings and system combinations can be accessed via the Carrier database at: www.MyCarrierRatings.com

For performance data at specific application &/or design conditions with various indoor unit combinations, the equipment performance calculator can be accessed at : http://rpmob.wrightsoft.com/

Model Number	Indoor Coil Model Number	Furnace Model Number	Cooling Capacity	EER	SEER
CA13NA018****A	CAP**1814A**+TDR		17,600	10.9	13.0
CA13NA024****A	CAP**2414A**+TDR		23,000	11.0	13.0
CA13NA030****A	CAP**3014A**+TDR		27,400	10.9	13.0
CA13NA036****C	CAP**3617A**+TDR		33,800	10.9	13.0
CA13NA042****A	CAP**4221A**+TDR		41,000	11.0	13.0
CA13NA048****C	CAP**4821A**+TDR		45,500	11.0	13.0
CA13NA060****C	CAP**6024A**+TDR		57,500	11.0	13.0

AHRI — Air Conditioning, Heating & Refrigeration Institute
EERA — Energy Efficiency Ratio – 80°F (26.6°C) indoor db/67°F (19.4°C) indoor wb & 95°F (35°C) outdoor wb.
SEER — Seasonal Energy Efficiency Ratio
TDR — Time–Delay Relay. In most cases, only one method should be used to achieve TDR function. Using more than one method in a system may cause degradation in performance.
Use either the accessory Time–Delay Relay, KAATD0101TDR, or a furnace equipped with TDR. Most Carrier furnaces are equipped with TDR.

NOTES:

1. Ratings are net values reflecting the effects of circulating fan motor heat. Supplemental electric heat is not included.
2. Tested outdoor/indoor combinations have been tested in accordance with DOE test procedures for central air conditioners. Ratings for other combinations are determined under DOE computer simulation procedures.
3. Determine actual CFM values obtainable for your system by referring to fan performance data in fan coil or furnace coil literature.
4. Do not apply with capillary tube coils as performance and reliability are significantly affected.

DETAILED COOLING CAPACITIES#

EVAPORATOR AIR		CONDENSER ENTERING AIR TEMPERATURES °F (°C)																	
		75 (23.9)			85 (29.4)			95 (35)			105 (40.6)			115 (46.1)			125 (51.7)		
CFM	EWB °F (°C)	Capacity MBtuh		Total System KW**	Capacity MBtuh		Total System KW**	Capacity MBtuh		Total System KW**	Capacity MBtuh		Total System KW**	Capacity MBtuh		Total System KW**	Capacity MBtuh		Total System KW**
		Total	Sens‡		Total	Sens‡		Total	Sens‡		Total	Sens‡		Total	Sens‡		Total	Sens‡	
CA13NA018****A Outdoor Section With CAP**1814A** Indoor Section																			
525	72 (22.2)	20.79	10.51	1.27	19.89	10.18	1.42	18.93	9.83	1.58	17.94	9.47	1.77	16.87	9.09	1.97	15.67	8.67	2.20
	67 (19.4)	19.09	12.93	1.27	18.24	12.58	1.42	17.33	12.21	1.59	16.39	11.84	1.77	15.37	11.44	1.98	14.26	11.01	2.20
	63 (17.2)††	17.84	12.55	1.27	17.02	12.19	1.42	16.15	11.82	1.59	15.24	11.43	1.78	14.26	11.02	1.98	13.22	10.58	2.20
	62 (16.7)	17.53	15.32	1.27	16.74	14.95	1.42	15.91	14.57	1.59	15.04	14.16	1.78	14.17	14.17	1.98	13.33	13.33	2.20
	57 (13.9)	17.00	17.00	1.27	16.36	16.36	1.42	15.67	15.67	1.59	14.95	14.95	1.78	14.18	14.18	1.98	13.33	13.33	2.20
600	72 (22.2)	21.12	11.01	1.29	20.19	10.67	1.44	19.19	10.32	1.61	18.18	9.96	1.80	17.07	9.57	2.00	15.84	9.15	2.22
	67 (19.4)	19.42	13.74	1.29	18.54	13.39	1.45	17.60	13.02	1.61	16.63	12.65	1.80	15.59	12.24	2.00	14.44	11.80	2.23
	63 (17.2)††	18.17	13.32	1.30	17.32	12.96	1.45	16.43	12.58	1.62	15.49	12.19	1.80	14.48	11.77	2.01	13.40	11.33	2.23
	62 (16.7)	17.93	16.44	1.30	17.12	16.06	1.45	16.30	16.21	1.62	15.53	15.53	1.80	14.71	14.71	2.01	13.81	13.81	2.23
	57 (13.9)	17.70	17.70	1.30	17.02	17.02	1.45	16.29	16.29	1.62	15.53	15.53	1.80	14.71	14.71	2.01	13.81	13.81	2.23
675	72 (22.2)	21.35	11.48	1.32	20.39	11.14	1.47	19.37	10.79	1.64	18.34	10.43	1.83	17.20	10.04	2.03	15.94	9.61	2.25
	67 (19.4)	19.66	14.52	1.32	18.76	14.17	1.47	17.79	13.80	1.64	16.81	13.42	1.83	15.74	13.01	2.03	14.58	12.56	2.25
	63 (17.2)††	18.41	14.06	1.32	17.55	13.70	1.48	16.63	13.31	1.64	15.67	12.92	1.83	14.64	12.49	2.03	13.54	12.03	2.26
	62 (16.7)	18.28	18.11	1.32	17.55	17.55	1.48	16.79	16.79	1.64	15.99	15.99	1.83	15.13	15.13	2.03	14.18	14.18	2.25
	57 (13.9)	18.26	18.26	1.32	17.55	17.55	1.48	16.79	16.79	1.64	15.99	15.99	1.83	15.13	15.13	2.03	14.18	14.18	2.25

EVAPORATOR AIR		CONDENSER ENTERING AIR TEMPERATURES °F (°C)																	
		75 (23.9)			85 (29.4)			95 (35)			105 (40.6)			115 (46.1)			125 (51.7)		
CFM	EWB °F (°C)	Capacity MBtuh		Total System KW**	Capacity MBtuh		Total System KW**	Capacity MBtuh		Total System KW**	Capacity MBtuh		Total System KW**	Capacity MBtuh		Total System KW**	Capacity MBtuh		Total System KW**
		Total	Sens‡		Total	Sens‡		Total	Sens‡		Total	Sens‡		Total	Sens‡		Total	Sens‡	
CA13NA024****A Outdoor Section With CAP**2414A** Indoor Section																			
700	72 (22.2)	27.09	13.27	1.65	25.82	12.82	1.85	24.63	12.41	2.06	23.42	12.00	2.30	22.08	11.54	2.56	20.57	11.04	2.84
	67 (19.4)	24.89	16.41	1.65	23.83	15.99	1.84	22.71	15.56	2.05	21.55	15.13	2.29	20.30	14.66	2.56	18.89	14.14	2.84
	63 (17.2)††	23.39	15.98	1.64	22.38	15.55	1.84	21.29	15.11	2.05	20.18	14.66	2.29	18.98	14.17	2.56	17.65	13.64	2.85
	62 (16.7)	23.01	19.56	1.64	22.03	19.14	1.84	20.99	18.67	2.05	19.94	18.19	2.29	18.91	18.91	2.56	17.82	17.82	2.84
	57 (13.9)	22.46	22.46	1.64	21.66	21.66	1.83	20.79	20.79	2.05	19.89	19.89	2.29	18.91	18.91	2.56	17.82	17.82	2.84
800	72 (22.2)	27.52	13.92	1.69	26.15	13.46	1.88	24.91	13.04	2.10	23.67	12.62	2.33	22.29	12.16	2.59	20.73	11.65	2.88
	67 (19.4)	25.25	17.44	1.68	24.16	17.03	1.88	23.00	16.60	2.09	21.82	16.16	2.33	20.53	15.69	2.59	19.09	15.16	2.88
	63 (17.2)††	23.76	16.95	1.68	22.72	16.53	1.87	21.60	16.08	2.09	20.46	15.63	2.33	19.22	15.14	2.59	17.86	14.60	2.88
	62 (16.7)	23.47	20.99	1.68	22.49	20.52	1.87	21.52	21.52	2.09	20.58	20.58	2.33	19.54	19.54	2.59	18.38	18.38	2.88
	57 (13.9)	23.30	23.30	1.68	22.44	22.44	1.87	21.53	21.53	2.09	20.58	20.58	2.33	19.54	19.54	2.59	18.38	18.38	2.88
900	72 (22.2)	27.79	14.53	1.73	26.41	14.07	1.92	25.10	13.63	2.13	23.83	13.21	2.37	22.42	12.76	2.63	20.83	12.24	2.91
	67 (19.4)	25.51	18.45	1.72	24.38	18.03	1.91	23.21	17.59	2.13	22.00	17.15	2.37	20.68	16.66	2.63	19.22	16.12	2.91
	63 (17.2)††	24.03	17.89	1.72	22.96	17.47	1.91	21.82	17.01	2.12	20.66	16.55	2.36	19.39	16.05	2.63	18.01	15.49	2.92
	62 (16.7)	23.97	23.97	1.72	23.07	23.07	1.91	22.11	22.11	2.12	21.12	21.12	2.36	20.03	20.03	2.63	18.82	18.82	2.91
	57 (13.9)	23.96	23.96	1.72	23.07	23.07	1.91	22.11	22.11	2.12	21.12	21.12	2.36	20.04	20.04	2.63	18.82	18.82	2.91

See notes on page 14

DETAILED COOLING CAPACITIES# CONTINUED

EVAPORATOR AIR		CONDENSER ENTERING AIR TEMPERATURES °F (°C)																	
		75 (23.9)			85 (29.4)			95 (35)			105 (40.6)			115 (46.1)			125 (51.7)		
CFM	EWB °F (°C)	Capacity MBtuh		Total System KW**	Capacity MBtuh		Total System KW**	Capacity MBtuh		Total System KW**	Capacity MBtuh		Total System KW**	Capacity MBtuh		Total System KW**	Capacity MBtuh		Total System KW**
		Total	Sens‡		Total	Sens‡		Total	Sens‡		Total	Sens‡		Total	Sens‡		Total	Sens‡	
CA13NA030****A Outdoor Section With CAP**3014A** Indoor Section																			
875	72 (22.2)	32.18	16.57	2.04	30.84	16.09	2.25	29.42	15.59	2.49	27.93	15.07	2.76	26.28	14.50	3.05	24.43	13.86	3.36
	67 (19.4)	29.70	20.70	2.03	28.44	20.20	2.25	27.08	19.68	2.49	25.67	19.13	2.75	24.11	18.54	3.04	22.39	17.88	3.35
	63 (17.2)††	27.91	20.13	2.03	26.69	19.62	2.25	25.39	19.07	2.49	24.02	18.50	2.75	22.52	17.88	3.04	20.88	17.21	3.35
	62 (16.7)	27.50	24.80	2.03	26.34	24.26	2.25	25.11	23.67	2.49	23.94	23.94	2.75	22.71	22.71	3.04	21.35	21.35	3.35
	57 (13.9)	27.10	27.10	2.03	26.12	26.12	2.25	25.05	25.05	2.49	23.94	23.94	2.75	22.71	22.71	3.04	21.35	21.35	3.35
1000	72 (22.2)	32.58	17.38	2.08	31.18	16.89	2.30	29.72	16.38	2.54	28.19	15.86	2.81	26.50	15.29	3.09	24.59	14.65	3.40
	67 (19.4)	30.08	22.03	2.08	28.79	21.53	2.30	27.40	21.00	2.54	25.96	20.45	2.80	24.36	19.85	3.09	22.60	19.17	3.40
	63 (17.2)††	28.31	21.38	2.08	27.06	20.87	2.30	25.72	20.31	2.53	24.32	19.74	2.80	22.78	19.11	3.09	21.11	18.42	3.40
	62 (16.7)	28.07	27.82	2.08	27.00	27.00	2.29	25.89	25.89	2.53	24.72	24.72	2.80	23.42	23.42	3.09	21.98	21.98	3.40
	57 (13.9)	28.04	28.04	2.08	27.01	27.01	2.29	25.89	25.89	2.53	24.72	24.72	2.80	23.42	23.42	3.09	21.98	21.98	3.40
1125	72 (22.2)	32.83	18.14	2.13	31.40	17.65	2.35	29.91	17.14	2.59	28.35	16.62	2.85	26.63	16.04	3.14	24.68	15.40	3.45
	67 (19.4)	30.36	23.30	2.13	29.03	22.80	2.34	27.62	22.26	2.58	26.15	21.70	2.85	24.54	21.08	3.14	22.76	20.38	3.45
	63 (17.2)††	28.59	22.57	2.12	27.32	22.05	2.34	25.95	21.49	2.58	24.53	20.90	2.85	22.98	20.26	3.13	21.29	19.53	3.44
	62 (16.7)	28.79	28.79	2.12	27.71	27.71	2.34	26.54	26.54	2.58	25.33	25.33	2.85	23.98	23.98	3.13	22.47	22.47	3.44
	57 (13.9)	28.79	28.79	2.12	27.71	27.71	2.34	26.55	26.55	2.58	25.33	25.33	2.85	23.98	23.98	3.13	22.47	22.47	3.44

EVAPORATOR AIR		CONDENSER ENTERING AIR TEMPERATURES °F (°C)																	
		75 (23.9)			85 (29.4)			95 (35)			105 (40.6)			115 (46.1)			125 (51.7)		
CFM	EWB °F (°C)	Capacity MBtuh		Total System KW**	Capacity MBtuh		Total System KW**	Capacity MBtuh		Total System KW**	Capacity MBtuh		Total System KW**	Capacity MBtuh		Total System KW**	Capacity MBtuh		Total System KW**
		Total	Sens‡		Total	Sens‡		Total	Sens‡		Total	Sens‡		Total	Sens‡		Total	Sens‡	
CA13NA036****C Outdoor Section With CAP**4821** Indoor Section																			
1050	72 (22.2)	40.22	21.00	2.54	38.50	20.34	2.79	36.66	19.65	3.07	34.69	18.93	3.39	32.56	18.15	3.76	30.22	17.30	4.20
	67 (19.4)	36.61	25.73	2.51	35.00	25.05	2.76	33.29	24.35	3.04	31.46	23.60	3.36	29.49	22.81	3.74	27.34	21.95	4.18
	63 (17.2)††	34.02	24.88	2.49	32.50	24.20	2.74	30.89	23.49	3.02	29.17	22.73	3.35	27.32	21.94	3.73	25.29	21.07	4.18
	62 (16.7)	33.42	30.44	2.49	31.97	29.75	2.74	30.45	29.01	3.02	28.86	28.20	3.35	27.29	27.29	3.73	25.64	25.64	4.18
	57 (13.9)	32.55	32.55	2.48	31.38	31.38	2.73	30.12	30.12	3.02	28.77	28.77	3.35	27.29	27.29	3.73	25.65	25.65	4.18
1200	72 (22.2)	40.90	21.97	2.60	39.11	21.31	2.85	37.20	20.61	3.13	35.17	19.88	3.45	32.96	19.09	3.82	30.54	18.23	4.25
	67 (19.4)	37.25	27.30	2.57	35.57	26.61	2.82	33.80	25.90	3.10	31.91	25.15	3.42	29.88	24.35	3.80	27.67	23.48	4.24
	63 (17.2)††	34.63	26.36	2.55	33.04	25.66	2.80	31.38	24.94	3.08	29.60	24.18	3.41	27.69	23.37	3.79	25.61	22.48	4.24
	62 (16.7)	34.19	32.60	2.55	32.73	31.85	2.80	31.24	31.24	3.08	29.83	29.83	3.41	28.26	28.26	3.79	26.52	26.52	4.24
	57 (13.9)	33.87	33.87	2.55	32.61	32.61	2.80	31.27	31.27	3.08	29.83	29.83	3.41	28.26	28.26	3.79	26.52	26.52	4.24
1350	72 (22.2)	41.40	22.89	2.66	39.55	22.22	2.91	37.60	21.52	3.19	35.50	20.77	3.51	33.24	19.97	3.88	30.75	19.10	4.31
	67 (19.4)	37.72	28.79	2.63	36.00	28.11	2.88	34.19	27.39	3.16	32.26	26.63	3.48	30.19	25.81	3.86	27.93	24.92	4.30
	63 (17.2)††	35.09	27.77	2.61	33.47	27.07	2.86	31.76	26.34	3.14	29.94	25.57	3.47	27.99	24.73	3.85	25.88	23.82	4.29
	62 (16.7)	34.90	34.90	2.61	33.63	33.63	2.86	32.22	32.22	3.15	30.70	30.70	3.47	29.05	29.05	3.85	27.22	27.22	4.30
	57 (13.9)	34.96	34.96	2.61	33.64	33.64	2.86	32.23	32.23	3.15	30.70	30.70	3.47	29.05	29.05	3.85	27.22	27.22	4.29

See notes on page 14

DETAILED COOLING CAPACITIES# CONTINUED

EVAPORATOR AIR		CONDENSER ENTERING AIR TEMPERATURES °F (°C)																	
		75 (23.9)			85 (29.4)			95 (35)			105 (40.6)			115 (46.1)			125 (51.7)		
CFM	EWB °F (°C)	Capacity MBtuh		Total System KW**	Capacity MBtuh		Total System KW**	Capacity MBtuh		Total System KW**	Capacity MBtuh		Total System KW**	Capacity MBtuh		Total System KW**	Capacity MBtuh		Total System KW**
		Total	Sens‡		Total	Sens‡		Total	Sens‡		Total	Sens‡		Total	Sens‡		Total	Sens‡	
CA13NA042****A Outdoor Section With CAP**4221** Indoor Section																			
1225	72 (22.2)	48.49	25.49	3.39	46.39	24.69	3.73	44.18	23.85	4.11	41.83	22.97	4.52	39.28	22.03	4.98	36.45	21.00	5.47
	67 (19.4)	44.47	31.36	3.33	42.52	30.54	3.67	40.46	29.67	4.05	38.28	28.77	4.47	35.93	27.82	4.92	33.34	26.78	5.42
	63 (17.2)	41.53	30.43	3.29	39.69	29.59	3.63	37.74	28.72	4.01	35.68	27.80	4.43	33.47	26.84	4.88	31.05	25.79	5.38
	62 (16.7)	40.83	37.19	3.28	39.07	36.35	3.63	37.22	35.45	4.00	35.29	34.48	4.42	33.32	33.32	4.88	31.36	31.36	5.38
	57 (13.9)	39.73	39.73	3.27	38.29	38.29	3.62	36.76	36.76	4.00	35.12	35.12	4.42	33.34	33.34	4.88	31.36	31.36	5.38
1400	72 (22.2)	49.21	26.62	3.47	47.02	25.80	3.81	44.73	24.95	4.19	42.30	24.06	4.61	39.67	23.11	5.06	36.75	22.07	5.55
	67 (19.4)	45.16	33.20	3.42	43.14	32.37	3.76	41.00	31.49	4.13	38.75	30.59	4.55	36.34	29.63	5.01	33.67	28.57	5.50
	63 (17.2)	42.22	32.16	3.38	40.31	31.31	3.72	38.28	30.42	4.09	36.17	29.51	4.51	33.89	28.53	4.97	31.40	27.47	5.46
	62 (16.7)	41.69	39.75	3.37	39.91	38.85	3.71	38.02	38.02	4.09	36.34	36.34	4.51	34.45	34.45	4.98	32.33	32.33	5.48
	57 (13.9)	41.25	41.25	3.37	39.72	39.72	3.71	38.08	38.08	4.09	36.34	36.34	4.51	34.45	34.45	4.98	32.33	32.33	5.48
1575	72 (22.2)	49.75	27.70	3.56	47.50	26.88	3.90	45.14	26.02	4.27	42.64	25.12	4.69	39.94	24.16	5.14	36.95	23.10	5.63
	67 (19.4)	45.69	34.99	3.50	43.61	34.15	3.84	41.42	33.28	4.22	39.12	32.36	4.63	36.65	31.38	5.09	33.93	30.29	5.58
	63 (17.2)	42.75	33.85	3.46	40.79	33.00	3.80	38.72	32.11	4.17	36.55	31.18	4.59	34.23	30.18	5.05	31.68	29.07	5.54
	62 (16.7)	42.52	42.08	3.46	40.87	40.87	3.80	39.14	39.14	4.18	37.31	37.31	4.61	35.32	35.32	5.07	33.09	33.09	5.56
	57 (13.9)	42.49	42.49	3.46	40.87	40.87	3.80	39.15	39.15	4.18	37.32	37.32	4.61	35.32	35.32	5.07	33.09	33.09	5.56

EVAPORATOR AIR		CONDENSER ENTERING AIR TEMPERATURES °F (°C)																	
		75 (23.9)			85 (29.4)			95 (35)			105 (40.6)			115 (46.1)			125 (51.7)		
CFM	EWB °F (°C)	Capacity MBtuh		Total System KW**	Capacity MBtuh		Total System KW**	Capacity MBtuh		Total System KW**	Capacity MBtuh		Total System KW**	Capacity MBtuh		Total System KW**	Capacity MBtuh		Total System KW**
		Total	Sens‡		Total	Sens‡		Total	Sens‡		Total	Sens‡		Total	Sens‡		Total	Sens‡	
CA13NA048****C Outdoor Section With CAP**4821A** Indoor Section																			
1400	72 (22.2)	54.48	26.42	3.32	52.18	25.62	3.67	49.73	24.77	4.05	47.13	23.89	4.48	44.34	22.96	4.94	41.30	21.95	5.45
	67 (19.4)	49.80	32.57	3.30	47.63	31.74	3.64	45.34	30.88	4.03	42.93	29.97	4.45	40.34	29.02	4.92	37.58	28.02	5.43
	63 (17.2)††	46.41	31.55	3.28	44.36	30.70	3.63	42.19	29.82	4.01	39.89	28.90	4.44	37.46	27.94	4.91	34.91	26.94	5.42
	62 (16.7)	45.58	38.68	3.28	43.61	37.81	3.62	41.55	36.89	4.01	39.45	39.21	4.43	37.47	37.47	4.91	35.38	35.38	5.42
	57 (13.9)	44.55	44.55	3.27	42.94	42.94	3.62	41.23	41.23	4.01	39.42	39.42	4.43	37.47	37.47	4.91	35.39	35.39	5.42
1600	72 (22.2)	55.34	27.67	3.40	52.95	26.86	3.75	50.42	26.01	4.13	47.73	25.12	4.56	44.84	24.17	5.02	41.69	23.15	5.52
	67 (19.4)	50.62	34.60	3.38	48.38	33.76	3.72	46.00	32.88	4.11	43.51	31.98	4.53	40.84	31.01	5.00	38.00	29.98	5.51
	63 (17.2)††	47.22	33.46	3.36	45.08	32.60	3.71	42.83	31.71	4.09	40.47	30.78	4.52	37.96	29.80	4.99	35.33	28.77	5.49
	62 (16.7)	46.58	41.42	3.36	44.61	44.23	3.70	42.74	42.74	4.09	40.82	40.82	4.52	38.75	38.75	4.99	36.51	36.51	5.50
	57 (13.9)	46.27	46.27	3.36	44.56	44.56	3.70	42.75	42.75	4.09	40.82	40.82	4.52	38.75	38.75	4.99	36.52	36.52	5.50
1800	72 (22.2)	55.96	28.85	3.48	53.51	28.03	3.83	50.90	27.17	4.21	48.15	26.28	4.64	45.18	25.32	5.10	41.94	24.28	5.60
	67 (19.4)	51.21	36.53	3.46	48.91	35.69	3.80	46.48	34.81	4.19	43.93	33.88	4.61	41.20	32.89	5.08	38.30	31.83	5.58
	63 (17.2)††	47.80	35.26	3.44	45.61	34.40	3.79	43.31	33.50	4.17	40.89	32.56	4.60	38.33	31.55	5.06	35.64	30.47	5.57
	62 (16.7)	47.66	47.66	3.44	45.87	45.87	3.79	43.97	43.97	4.17	41.94	41.94	4.60	39.77	39.77	5.07	37.41	37.41	5.58
	57 (13.9)	47.67	47.67	3.44	45.88	45.88	3.79	43.97	43.97	4.17	41.95	41.95	4.60	39.77	39.77	5.07	37.41	37.41	5.58

See notes on page 14

DETAILED COOLING CAPACITIES# CONTINUED

EVAPORATOR AIR		CONDENSER ENTERING AIR TEMPERATURES °F (°C)																	
		75 (23.9)			85 (29.4)			95 (35)			105 (40.6)			115 (46.1)			125 (51.7)		
CFM	EWB °F (°C)	Capacity MBtuh		Total System KW**	Capacity MBtuh		Total System KW**	Capacity MBtuh		Total System KW**	Capacity MBtuh		Total System KW**	Capacity MBtuh		Total System KW**	Capacity MBtuh		Total System KW**
		Total	Sens‡		Total	Sens‡		Total	Sens‡		Total	Sens‡		Total	Sens‡		Total	Sens‡	
CA13NA060****C Outdoor Section With CAP**6024** Indoor Section																			
1750	72 (22.2)	68.59	35.06	4.21	65.48	33.92	4.68	61.98	32.66	5.19	58.14	31.29	5.74	53.87	29.80	6.33	49.25	28.20	6.98
	67 (19.4)	62.70	43.20	4.16	59.86	42.05	4.62	56.72	40.80	5.12	53.22	39.43	5.67	49.33	37.93	6.27	45.08	36.30	6.92
	63 (17.2)	58.47	41.67	4.13	55.83	40.53	4.58	52.92	39.28	5.08	49.67	37.91	5.63	46.05	36.40	6.23	42.08	34.76	6.88
	62 (16.7)	57.51	51.24	4.12	54.99	50.08	4.57	52.23	48.77	5.07	49.21	49.21	5.62	46.28	46.28	6.23	42.94	42.94	6.89
	57 (13.9)	56.15	56.15	4.11	54.07	54.07	4.56	51.79	51.79	5.06	49.18	49.18	5.62	46.22	46.22	6.23	42.89	42.89	6.89
2000	72 (22.2)	69.65	36.74	4.31	66.37	35.57	4.79	62.77	34.30	5.29	58.77	32.91	5.85	54.38	31.39	6.44	49.60	29.77	7.08
	67 (19.4)	63.71	45.91	4.26	60.74	44.75	4.72	57.50	43.49	5.23	53.86	42.09	5.78	49.84	40.55	6.37	45.48	38.87	7.02
	63 (17.2)	59.45	44.20	4.23	56.70	43.03	4.68	53.69	41.77	5.18	50.31	40.37	5.73	46.59	38.83	6.33	42.49	37.13	6.98
	62 (16.7)	58.76	54.88	4.22	56.20	55.73	4.68	53.66	53.66	5.18	50.87	50.87	5.74	47.70	47.70	6.34	44.16	44.16	7.00
	57 (13.9)	58.28	58.28	4.22	56.05	56.05	4.68	53.59	53.59	5.18	50.80	50.80	5.74	47.64	47.64	6.34	44.11	44.11	7.00
2250	72 (22.2)	70.43	38.33	4.42	67.03	37.14	4.89	63.31	35.85	5.40	59.20	34.44	5.95	54.69	32.90	6.54	49.81	31.26	7.17
	67 (19.4)	64.43	48.49	4.36	61.40	47.33	4.82	58.04	46.04	5.33	54.30	44.60	5.88	50.21	43.02	6.48	45.78	41.26	7.12
	63 (17.2)	60.19	46.60	4.33	57.35	45.42	4.78	54.23	44.13	5.28	50.79	42.71	5.83	46.97	41.11	6.43	42.83	39.31	7.08
	62 (16.7)	60.10	60.10	4.33	57.73	57.73	4.79	55.11	55.11	5.29	52.15	52.15	5.85	48.81	48.81	6.46	45.11	45.11	7.11
	57 (13.9)	60.02	60.02	4.33	57.66	57.66	4.79	55.05	55.05	5.29	52.10	52.10	5.85	48.76	48.76	6.45	45.06	45.06	7.11

† Total and sensible capacities are net capacities. Blower motor heat has been subtracted.
‡ Sensible capacities shown are based on 80°F (27°C) entering air at the indoor coil. For sensible capacities at other than 80°F (27°C), deduct 835 Btuh (245 kW) per 1000 CFM (480 L/S) of indoor coil air for each degree below 80°F (27°C), or add 835 Btuh (245 kW) per 1000 CFM (480 L/S) of indoor coil air per degree above 80°F (27°C).
# Detailed cooling capacities are based on indoor and outdoor unit at the same elevation per AHRI standard 210/240–2008. If additional tubing length and/or indoor unit is located above outdoor unit, a slight variation in capacity may occur.
** System kw is total of indoor and outdoor unit kilowatts.
†† At TVA rating indoor condition (75°F edb/63°F ewb). All other indoor air temperatures are at 80°F edb.
NOTE: When the required data falls between the published data, interpolation may be performed. Extrapolation is not an acceptable practice.
EWB — Entering Wet Bulb

CONDENSER ONLY RATINGS

SST °F (°C)		CONDENSER ENTERING AIR TEMPERATURES °F (°C)							
		55 (12.78)	65 (18.33)	75 (23.89)	85 (29.44)	95 (35.0)	105 (40.56)	115 (46.11)	125 (51.67)
CA13NA018**A**									
30 (−1.11)	TCG	16.10	15.20	14.20	13.30	12.30	11.30	10.20	9.10
	SDT	70.80	80.40	89.90	99.50	109.10	118.80	128.60	138.50
	KW	0.83	0.95	1.09	1.24	1.40	1.57	1.76	1.95
35 (1.67)	TCG	17.70	16.70	15.70	14.70	13.70	12.60	11.50	10.30
	SDT	71.90	81.40	90.90	100.40	109.90	119.60	129.40	139.10
	KW	0.83	0.95	1.09	1.24	1.40	1.58	1.77	1.97
40 (4.44)	TCG	19.50	18.40	17.40	16.20	15.10	14.00	12.80	11.50
	SDT	73.00	82.50	91.90	101.30	110.80	120.40	130.10	139.70
	KW	0.83	0.95	1.09	1.23	1.40	1.58	1.77	1.98
45 (7.22)	TCG	21.30	20.20	19.00	17.90	16.70	15.40	14.20	12.80
	SDT	74.20	83.60	93.00	102.30	111.70	121.20	130.70	140.30
	KW	0.83	0.95	1.08	1.23	1.40	1.58	1.78	1.99
50 (10.0)	TCG	23.30	22.00	20.80	19.50	18.20	16.90	15.60	14.20
	SDT	75.40	84.80	94.10	103.40	112.60	122.00	131.40	140.90
	KW	0.82	0.95	1.08	1.23	1.40	1.58	1.78	1.99
55 (12.78)	TCG	25.20	23.90	22.50	21.20	19.80	18.50	17.00	15.50
	SDT	76.70	86.00	95.20	104.40	113.60	122.90	132.20	141.50
	KW	0.82	0.94	1.08	1.23	1.39	1.58	1.78	1.99
CA13NA024**A**									
30 (−1.11)	TCG	21.30	20.10	18.90	17.70	16.50	15.20	14.00	12.60
	SDT	73.00	82.40	91.80	101.20	110.60	120.20	129.80	139.40
	KW	1.06	1.21	1.37	1.56	1.77	1.99	2.24	2.51
35 (1.67)	TCG	23.40	22.10	20.90	19.60	18.20	16.90	15.50	14.10
	SDT	74.40	83.60	93.00	102.30	111.70	121.10	130.60	140.20
	KW	1.06	1.21	1.38	1.57	1.77	2.00	2.25	2.52
40 (4.44)	TCG	25.60	24.20	22.90	21.50	20.00	18.60	17.10	15.60
	SDT	75.80	85.00	94.20	103.50	112.70	122.10	131.50	140.90
	KW	1.07	1.22	1.39	1.58	1.78	2.01	2.26	2.53
45 (7.22)	TCG	27.90	26.40	24.90	23.40	21.90	20.40	18.80	17.10
	SDT	77.30	86.30	95.50	104.70	113.80	123.10	132.30	141.60
	KW	1.08	1.23	1.40	1.58	1.79	2.02	2.27	2.54
50 (10.0)	TCG	30.20	28.60	27.00	25.40	23.70	22.10	20.40	18.60
	SDT	78.80	87.80	96.80	105.90	114.90	124.10	133.30	142.40
	KW	1.09	1.24	1.40	1.59	1.80	2.03	2.28	2.55
55 (12.78)	TCG	32.60	30.80	29.10	27.30	25.60	23.90	22.10	20.20
	SDT	80.30	89.20	98.20	107.10	116.10	125.20	134.20	143.10
	KW	1.09	1.25	1.41	1.60	1.81	2.03	2.28	2.55
CA13NA030**A**									
30 (−1.11)	TCG	25.40	24.00	22.60	21.10	19.60	18.00	16.40	14.60
	SDT	74.40	83.60	92.90	102.10	111.40	120.80	130.20	139.60
	KW	1.35	1.52	1.70	1.91	2.13	2.37	2.63	2.89
35 (1.67)	TCG	28.00	26.50	24.90	23.40	21.70	20.00	18.30	16.40
	SDT	75.90	85.00	94.20	103.40	112.60	121.90	131.20	140.50
	KW	1.35	1.52	1.71	1.92	2.15	2.39	2.65	2.92
40 (4.44)	TCG	30.70	29.10	27.40	25.70	24.00	22.20	20.30	18.40
	SDT	77.40	86.50	95.60	104.70	113.80	123.00	132.20	141.40
	KW	1.35	1.53	1.72	1.93	2.15	2.40	2.67	2.95
45 (7.22)	TCG	33.50	31.80	30.00	28.20	26.30	24.40	22.40	20.30
	SDT	79.00	88.00	97.00	106.10	115.10	124.20	133.30	142.30
	KW	1.36	1.53	1.72	1.93	2.16	2.42	2.69	2.97
50 (10.0)	TCG	36.50	34.60	32.70	30.70	28.70	26.70	24.60	22.30
	SDT	80.70	89.70	98.50	107.50	116.40	125.40	134.30	143.20
	KW	1.36	1.54	1.73	1.94	2.17	2.43	2.70	2.99
55 (12.78)	TCG	39.50	37.40	35.30	33.20	31.10	29.00	26.70	24.30
	SDT	82.40	91.30	100.10	108.90	117.80	126.60	135.40	144.20
	KW	1.37	1.54	1.74	1.95	2.18	2.44	2.71	3.00
CA13NA036**C**									
30 (−1.11)	TCG	30.30	28.80	27.20	25.50	23.80	22.00	20.00	18.00
	SDT	73.20	82.20	91.40	100.60	109.90	119.10	128.40	137.80
	KW	1.65	1.85	2.07	2.30	2.57	2.88	3.25	3.68
35 (1.67)	TCG	33.50	31.80	30.10	28.30	26.40	24.40	22.30	20.10
	SDT	74.80	83.80	92.80	102.00	111.10	120.30	129.50	138.70
	KW	1.66	1.87	2.08	2.32	2.59	2.90	3.26	3.69
40 (4.44)	TCG	37.00	35.10	33.20	31.20	29.20	27.00	24.80	22.40
	SDT	76.60	85.40	94.40	103.40	112.40	121.50	130.60	139.70
	KW	1.68	1.89	2.10	2.34	2.61	2.92	3.28	3.70
45 (7.22)	TCG	40.70	38.60	36.50	34.30	32.10	29.80	27.40	24.80
	SDT	78.50	87.20	96.00	104.90	113.80	122.80	131.80	140.80
	KW	1.70	1.91	2.13	2.37	2.63	2.94	3.30	3.72
50 (10.0)	TCG	44.60	42.30	40.00	37.70	35.30	32.80	30.20	27.40
	SDT	80.50	89.10	97.80	106.50	115.30	124.20	133.00	141.90
	KW	1.73	1.94	2.16	2.40	2.66	2.97	3.32	3.73
55 (12.78)	TCG	48.80	46.30	43.80	41.30	38.70	36.00	33.20	30.20
	SDT	82.60	91.10	99.60	108.20	116.90	125.60	134.30	143.00
	KW	1.77	1.97	2.19	2.43	2.70	3.00	3.35	3.76

See notes on page 16

CONDENSER ONLY RATINGS CONTINUED

SST °F (°C)		CONDENSER ENTERING AIR TEMPERATURES °F (°C)							
		55 (12.78)	65 (18.33)	75 (23.89)	85 (29.44)	95 (35.0)	105 (40.56)	115 (46.11)	125 (51.67)
CA13NA042**A**									
30 (−1.11)	TCG	38.00	36.00	33.90	31.90	29.70	27.60	25.30	22.90
	SDT	73.20	82.30	91.40	100.60	109.80	119.10	128.40	137.70
	KW	1.95	2.20	2.48	2.80	3.14	3.53	3.95	4.41
35 (1.67)	TCG	41.90	39.70	37.40	35.10	32.80	30.50	28.00	25.50
	SDT	74.80	83.70	92.80	101.90	111.00	120.20	129.40	138.60
	KW	1.97	2.22	2.50	2.81	3.16	3.54	3.97	4.43
40 (4.44)	TCG	46.00	43.60	41.10	38.70	36.20	33.60	30.90	28.10
	SDT	76.40	85.20	94.20	103.20	112.20	121.30	130.40	139.50
	KW	1.98	2.23	2.52	2.83	3.18	3.56	3.98	4.44
45 (7.22)	TCG	50.30	47.70	45.10	42.40	39.60	36.80	33.90	30.90
	SDT	78.10	86.90	95.70	104.60	113.50	122.50	131.40	140.40
	KW	2.01	2.26	2.54	2.85	3.19	3.58	4.00	4.45
50 (10.0)	TCG	54.90	52.10	49.20	46.20	43.20	40.20	37.00	33.60
	SDT	80.00	88.60	97.20	106.00	114.80	123.70	132.50	141.30
	KW	2.03	2.28	2.56	2.87	3.21	3.60	4.01	4.47
55 (12.78)	TCG	59.70	56.60	53.40	50.20	46.90	43.50	40.10	36.40
	SDT	81.90	90.30	98.90	107.50	116.20	124.90	133.60	142.20
	KW	2.06	2.30	2.58	2.89	3.23	3.62	4.03	4.48
CA13NA048**C**									
30 (−1.11)	TCG	41.10	38.90	36.70	34.40	32.10	29.70	27.20	24.50
	SDT	73.80	83.00	92.30	101.60	111.00	120.40	129.70	139.10
	KW	2.19	2.46	2.76	3.10	3.47	3.87	4.30	4.76
35 (1.67)	TCG	45.20	42.80	40.50	38.00	35.50	32.90	30.20	27.40
	SDT	75.30	84.40	93.70	102.90	112.20	121.50	130.80	140.00
	KW	2.22	2.49	2.79	3.13	3.50	3.90	4.34	4.81
40 (4.44)	TCG	49.60	47.10	44.50	41.90	39.20	36.40	33.50	30.40
	SDT	76.90	86.00	95.10	104.30	113.40	122.60	131.80	141.00
	KW	2.24	2.51	2.82	3.15	3.53	3.93	4.38	4.85
45 (7.22)	TCG	54.30	51.60	48.80	46.00	43.10	40.10	36.90	33.60
	SDT	78.50	87.50	96.60	105.70	114.70	123.80	132.90	142.00
	KW	2.27	2.54	2.85	3.19	3.56	3.97	4.41	4.89
50 (10.0)	TCG	59.30	56.40	53.40	50.30	47.10	43.90	40.50	36.90
	SDT	80.20	89.20	98.10	107.10	116.10	125.10	134.10	143.00
	KW	2.30	2.58	2.88	3.22	3.59	4.00	4.45	4.92
55 (12.78)	TCG	64.60	61.40	58.10	54.80	51.40	47.90	44.20	40.30
	SDT	82.10	91.00	99.80	108.70	117.50	126.40	135.20	144.00
	KW	2.34	2.61	2.92	3.25	3.63	4.04	4.48	4.96
CA13NA060**C**									
30 (−1.11)	TCG	54.90	51.90	49.00	46.00	42.90	39.80	36.50	33.10
	SDT	77.60	86.40	95.30	104.20	113.20	122.20	131.20	140.20
	KW	2.73	3.07	3.45	3.88	4.34	4.85	5.41	6.01
35 (1.67)	TCG	60.30	57.10	53.90	50.70	47.30	43.90	40.30	36.50
	SDT	79.50	88.20	97.00	105.80	114.70	123.60	132.50	141.30
	KW	2.79	3.13	3.51	3.94	4.40	4.92	5.48	6.08
40 (4.44)	TCG	66.00	62.60	59.10	55.50	51.90	48.20	44.30	40.10
	SDT	81.60	90.20	98.80	107.50	116.30	125.00	133.80	142.50
	KW	2.86	3.20	3.58	4.00	4.47	4.98	5.54	6.15
45 (7.22)	TCG	72.10	68.30	64.50	60.70	56.70	52.60	48.40	43.80
	SDT	83.80	92.20	100.70	109.30	117.90	126.50	135.10	143.60
	KW	2.93	3.27	3.65	4.08	4.54	5.06	5.61	6.21
50 (10.0)	TCG	78.50	74.40	70.20	66.00	61.60	57.20	52.50	47.50
	SDT	86.10	94.40	102.70	111.20	119.60	128.10	136.50	144.80
	KW	3.01	3.35	3.73	4.15	4.62	5.13	5.68	6.27
55 (12.78)	TCG	85.10	80.60	76.10	71.40	66.70	61.80	56.70	51.20
	SDT	88.60	96.60	104.80	113.10	121.40	129.70	137.90	146.00
	KW	3.09	3.44	3.81	4.24	4.70	5.21	5.75	6.34

* AHRI listing applies only to systems shown in Combination Ratings table.

KW – Outdoor Unit Kilowatts Only.

SDT – Saturated Temperature Leaving Compressor (°F)

SST – Saturated Temperature Entering Compressor (°F/°C)

TCG – Gross Cooling Capacity (1000 Btuh)

GUIDE SPECIFICATIONS
GENERAL

System Description

Outdoor-mounted, air-cooled, split-system air conditioner unit suitable for ground or rooftop installation. Unit consists of a hermetic compressor, an air-cooled coil, propeller-type condenser fan, and a control box. Unit will discharge supply air upward as shown on contract drawings. Unit will be used in a refrigeration circuit to match up to a packaged fan coil or coil unit.

Quality Assurance

— Unit will be rated in accordance with the latest edition of AHRI Standard 210.

— Unit will be certified for capacity and efficiency, and listed in the latest AHRI directory.

— Unit construction will comply with latest edition of ANSI/ ASHRAE and with NEC.

— Unit will be constructed in accordance with UL standards and will carry the UL label of approval. Unit will have c-UL-us approval.

— Unit cabinet will be capable of withstanding Federal Test Method Standard No. 141 (Method 6061) 500-hr salt spray test.

— Air-cooled condenser coils will be leak tested at 150 psig and pressure tested at 450 psig.

— Unit constructed in ISO9001 approved facility.

Delivery, Storage, and Handling

— Unit will be shipped as single package only and is stored and handled per unit manufacturer's recommendations.

Warranty (for inclusion by specifying engineer)

— U.S. and Canada only.

PRODUCTS

Equipment

Factory assembled, single piece, air-cooled air conditioner unit. Contained within the unit enclosure is all factory wiring, piping, controls, compressor, refrigerant charge Puron® (R-410A), and special features required prior to field start-up.

Unit Cabinet

— Unit cabinet will be constructed of galvanized steel, bonderized, and coated with a powder coat paint.

— 3 phase equipment available with dense grille only.

— Single phase equipment available with wide (W) or dense (A) grille option.

Fans

— Condenser fan will be direct-drive propeller type, discharging air upward.

— Condenser fan motors will be totally enclosed, 1-phase type with class B insulation and permanently lubricated bearings. Shafts will be corrosion resistant.

— Fan blades will be statically and dynamically balanced.

— Condenser fan openings will be equipped with coated steel wire safety guards.

Compressor

— Compressor will be hermetically sealed.

— Compressor will be mounted on rubber vibration isolators.

Condenser Coil

— Condenser coil will be air cooled.

— Coil will be constructed of aluminum fins mechanically bonded to copper tubes which are then cleaned, dehydrated, and sealed.

Refrigeration Components

— Refrigeration circuit components will include liquid-line shutoff valve with sweat connections, vapor-line shutoff valve with sweat connections, system charge of Puron® (R-410A) refrigerant, and compressor oil.

— Unit will be equipped with high-pressure switch, low pressure switch and filter drier for Puron refrigerant.

Operating Characteristics

— The capacity of the unit will meet or exceed _____ Btuh at a suction temperature of _____ °F/°C. The power consumption at full load will not exceed _____ kW.

— Combination of the unit and the evaporator or fan coil unit will have a total net cooling capacity of _____ Btuh or greater at conditions of _____ CFM entering air temperature at the evaporator at _____ °F/°C wet bulb and _____ °F/°C dry bulb, and air entering the unit at _____ °F/°C.

— The system will have a SEER of _____ Btuh/watt or greater at DOE conditions.

Electrical Requirements

— Nominal unit electrical characteristics will be _____ v, single phase, 60 hz. The unit will be capable of satisfactory operation within voltage limits of _____ v to _____ v.

— Nominal unit electrical characteristics will be _____ v, three phase, 60 hz. The unit will be capable of satisfactory operation within voltage limits of _____ v to _____ v.

— Unit electrical power will be single point connection.

— Control circuit will be 24v.

Special Features

— Refer to section of this literature identifying accessories and descriptions for specific features and available enhancements.

SYSTEM DESIGN SUMMARY

1. Intended for outdoor installation with free air inlet and outlet. Outdoor fan external static pressure available is less than 0.01-IN W.C.
2. Minimum outdoor operating air temperature without low-ambient operation accessory is 55°F (12.8°C).
3. Maximum outdoor operating air temperature is 125°F (51.7°C).
4. For reliable operation, unit should be level in all horizontal planes.
5. For interconnecting refrigerant tube lengths greater than 80 ft (23.4 m) and/or 35 ft (10.7 m) vertical differential, consult Residential Piping and Longline Guideline and Service Manual available from equipment distributor.
6. If any refrigerant tubing is buried, provide a 6 in. (152.4 mm) vertical rise to the valve connections at the unit. Refrigerant tubing lengths up to 36 in. (914.4 mm) may be buried without further consideration. Do not bury refrigerant lines longer than 36 in. (914.4 mm).
7. Use only copper wire for electric connection at unit. Aluminum and clad aluminum are not acceptable for the type of connector provided.
8. Do not apply capillary tube indoor coils to these units.
9. Factory-supplied filter drier must be installed.

Copyright 2012 Carrier Corp. • 7310 W. Morris St. • Indianapolis, IN 46231

Edition Date: 11/12

Catalog No: CA13NA-05PD

Manufacturer reserves the right to change, at any time, specifications and designs without notice and without obligations.

Replaces: CA13NA-04PD