# CA16NW
# Single–Stage Air Conditioner with Puron® Refrigerant 1–1/2 To 5 Tons

Carrier
turn to the experts™

# Product Data

## INDUSTRY LEADING FEATURES / BENEFITS

### Efficiency

- Up to 17.0 SEER / 12.2 – 14.0 EER
- Microtube Technology™ refrigeration system

### Reliability

- Puron® refrigerant
- Scroll compressor
- Internal pressure relief valve
- Internal thermal overload
- Filter drier

### Durability

WeatherArmor™ protection package:

- Solid, durable sheet metal construction
- Dense wire coil guard

### Applications

- Long–line – up to 250 feet (76.20 m) total equivalent length, up to 200 feet (60.96 m) condenser above evaporator, or up to 80 ft. (24.38 m) evaporator above condenser (See Longline Guide for more information.)
- Low ambient (down to -10°F/-23°C) with accessory kit

**NOTE: Ratings contained in this document are subject to change at any time. Always refer to the AHRI directory (www.ahridirectory.org) for the most up–to–date ratings information.**

# PRODUCT NUMBER NOMENCLATURE

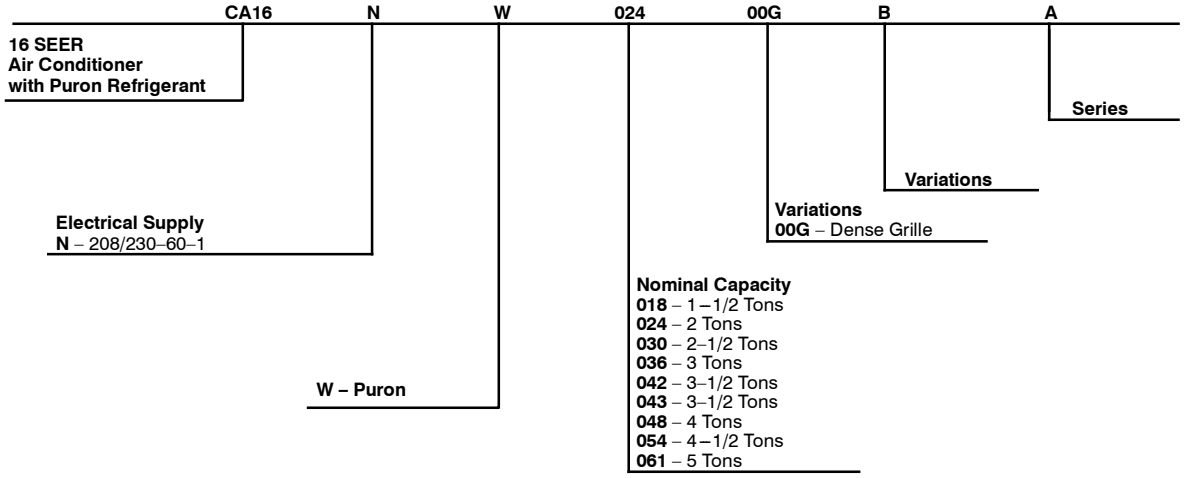


Use of the AHRI Certified TM Mark indicates a manufacturer's participation in the program For verification of certification for individual products, go to www.ahridirectory.org.

# PHYSICAL DATA

| UNIT SIZE | 18–A | 24–A | 30–A | 36–B | 42–B | 43–B | 48–B | 54–B | 61–B |
|---|---|---|---|---|---|---|---|---|---|
| **Compressor Type** | Scroll | | | | | | | | |
| **REFRIGERANT** | Puron® (R–410A) | | | | | | | | |
| Control | TXV (Puron Hard Shutoff) | | | | | | | | |
| Charge lb (kg) | 3.83 (1.74) | 4.95 (2.25) | 6.82 (3.09) | 6.75 (3.06) | 8.60 (3.90) | 11.70 (5.31) | 13.00 (5.90) | 14.5 (6.58) | 14.00 (6.35) |
| **COND FAN** | Propeller Type, Direct Drive | | | | | | | | |
| Air Discharge | Vertical | | | | | | | | |
| Air Qty (CFM) | 1700 | 2196 | 2614 | 3810 | 3337 | 3223 | 4046 | 4046 | 4000 |
| Motor HP | 1/12 | 1/10 | 1/10 | 1/5 | 1/8 | 1/12 | 1/4 | 1/4 | 1/3 |
| Motor RPM | 1100 | 800 | 1100 | 810 | 810 | 800 | 800 | 800 | 817 |
| **COND COIL** | | | | | | | | | |
| Face Area (Sq ft) | 9.85 | 12.1 | 21.56 | 17.6 | 17.6 | 25.15 | 25.15 | 30.15 | 30.15 |
| Fins per In. | 25 | 25 | 25 | 25 | 20 | 20 | 20 | 20 | 20 |
| Rows | 1 | 1 | 1 | 1 | 2 | 2 | 2 | 2 | 2 |
| Circuits | 3 | 4 | 5 | 4 | 7 | 8 | 7 | 8 | 12 |
| **VALVE CONNECT. (In. ID)** | | | | | | | | | |
| Vapor | 3/4” | 3/4” | 3/4” | 7/8” | 7/8” | 7/8” | 7/8” | 7/8” | 7/8” |
| Liquid | 3/8” | | | | | | | | |
| **REFRIGERANT TUBES (In. OD)** | | | | | | | | | |
| Rated Vapor* | 3/4” | 3/4” | 3/4” | 7/8” | 7/8” | 7/8” | 7/8” | 1–1/8” | 1–1/8” |
| Max Liquid Line | 3/8” | | | | | | | | |

* Units are rated with 25 ft (7.6 m) of lineset length. See Vapor Line Sizing and Cooling Capacity Loss table when using other sizes and lengths of lineset.
**Note**: See unit Installation Instruction for proper installation.

† See *Liquid Line Sizing For Cooling Only Systems with Puron Refrigerant* tables.

# REFRIGERANT PIPING LENGTH LIMITATIONS

## Liquid Line Sizing and Maximum Total Equivalent Lengths† for Cooling Only Systems with Puron® Refrigerant:

The maximum allowable length of a residential split system depends on the liquid line diameter and vertical separation between indoor and outdoor units.

See Table below for liquid line sizing and maximum lengths :

**Maximum Total Equivalent Length**
**Outdoor Unit BELOW Indoor Unit**

| Size | Liquid Line Connection | Liquid Line Diam. w/ TXV | AC with Puron Refrigerant Maximum Total Equivalent Length†: Outdoor unit BELOW Indoor Vertical Separation ft (m) | | | | | | | | |
|---|---|---|---|---|---|---|---|---|---|---|---|
| | | | 0–5 (0–1.5) | 6–10 (1.8–3.0) | 11–20 (3.4–6.1) | 21–30 (6.4–9.1) | 31–40 (9.4–12.2) | 41–50 (12.5–15.2) | 51–60 (15.5–18.3) | 61–70 (18.6–21.3) | 71–80 (21.6–24.4) |
| 18 | 3/8 | 1/4 | 150 | 150 | 125 | 100 | 100 | 75 | – – | – – | – – |
| | | 5/16 | 250* | 250* | 250* | 250* | 250* | 250* | 250* | 225* | 150 |
| | | 3/8 | 250* | 250* | 250* | 250* | 250* | 250* | 250* | 250* | 250* |
| 24 | 3/8 | 1/4 | 75 | 75 | 75 | 50 | 50 | – – | – – | – – | – – |
| | | 5/16 | 250* | 250* | 250* | 250* | 250* | 225* | 175 | 125 | 100 |
| | | 3/8 | 250* | 250* | 250* | 250* | 250* | 250* | 250* | 250* | 250* |
| 30 | 3/8 | 1/4 | 30 | – – | – – | – – | – – | – – | – – | – – | – – |
| | | 5/16 | 175 | 225* | 200 | 175 | 125 | 100 | 75 | – – | – – |
| | | 3/8 | 250* | 250* | 250* | 250* | 250* | 250* | 250* | 250* | 250* |
| 36 | 3/8 | 5/16 | 175 | 150 | 150 | 100 | 100 | 100 | 75 | – – | – – |
| | | 3//8 | 250* | 250* | 250* | 250* | 250* | 250* | 250* | 250* | 250* |
| 42,43 | 3/8 | 5/16 | 125 | 100 | 100 | 75 | 75 | 50 | – – | – – | – – |
| | | 3/8 | 250* | 250* | 250* | 250* | 250* | 250* | 250* | 250* | 150 |
| 48 | 3/8 | 3/8 | 250* | 250* | 250* | 250* | 250* | 250* | 230 | 160 | – – |
| 54, 61 | 3/8 | 3/8 | 250* | 250* | 250* | 225* | 190 | 150 | 110 | – – | – – |

*** Maximum actual length not to exceed 200 ft (61 m)**

**† Total equivalent length accounts for losses due to elbows or fitting. See the Long Line Guideline for details.**

**– – = outside acceptable range**

**Maximum Total Equivalent Length**
**Outdoor Unit ABOVE Indoor Unit**

| Size | Liquid Line Connection | Liquid Line Diam. w/ TXV | AC with Puron Refrigerant Maximum Total Equivalent Length†: Outdoor unit ABOVE Indoor Vertical Separation ft (m) | | | | | | | |
|---|---|---|---|---|---|---|---|---|---|---|
| | | | 25 (7.6) | 26–50 (7.9–15.2) | 51–75 (15.5–22.9) | 76–100 (23.2–30.5) | 101–125 (30.8–38.1) | 126–150 (38.4–45.7) | 151–175 (46.0–53.3) | 176–200 (53.6–61.0) |
| 18 | 3/8 | 1/4 | 175 | 250* | 250* | 250* | 250* | 250* | 250* | 250* |
| | | 5/16 | 250* | 250* | 250* | 250* | 250* | 250* | 250* | 250* |
| | | 3/8 | 250* | 250* | 250* | 250* | 250* | 250* | 250* | 250* |
| 24 | 3/8 | 1/4 | 100 | 125 | 175 | 200 | 225* | 250* | 250* | 250* |
| | | 5/16 | 250* | 250* | 250* | 250* | 250* | 250* | 250* | 250* |
| | | 3/8 | 250* | 250* | 250* | 250* | 250* | 250* | 250* | 250* |
| 30 | 3/8 | 1/4 | 30 | – – | – – | – – | – – | – – | – – | – – |
| | | 5/16 | 250* | 250* | 250* | 250* | 250* | 250* | 250* | 250* |
| | | 3/8 | 250* | 250* | 250* | 250* | 250* | 250* | 250* | 250* |
| 36 | 3/8 | 5/16 | 225* | 250* | 250* | 250* | 250* | 250* | 250* | 250* |
| | | 3/8 | 250* | 250* | 250* | 250* | 250* | 250* | 250* | 250* |
| 42, 43 | 3/8 | 5/16 | 175 | 200 | 250* | 250* | 250* | 250* | 250* | 250* |
| | | 3/8 | 250* | 250* | 250* | 250* | 250* | 250* | 250* | 250* |
| 48 | 3/8 | 3/8 | 250* | 250* | 250* | 250* | 250* | 250* | 250* | 250* |
| 54, 61 | 3/8 | 3/8 | 250* | 250* | 250* | 250* | 250* | 250* | 250* | 250* |

*** Maximum actual length not to exceed 200 ft (61 m)**

**† Total equivalent length accounts for losses due to elbows or fitting. See the Long Line Guideline for details.**

**– – = outside acceptable range**

**REFRIGERANT CHARGE ADJUSTMENTS**

| Liquid Line Size | Puron Charge oz/ft (g/m) |
|---|---|
| 3/8 | 0.60 (17.74)<br>(Factory charge for lineset = 9 oz / 266.16 g) |
| 5/16 | 0.40 (11.83) |
| 1/4 | 0.27 (7.98) |

Units are factory charged for 15 ft (4.6 m) of 3/8" liquid line. The factory charge for 3/8" lineset 9 oz. When using other length or diameter liquid lines, charge adjustments are required per the chart above.

**Charging Formula:**

[(Lineset oz/ft x total length) – (factory charge for lineset)] = charge adjustment

**Example 1:** System has 15 ft of line set using existing 1/4" liquid line. What charge adjustment is required?

Formula: (.27 oz/ft x 15ft) – (9 oz) = (-4.95) oz.

Net result is to remove 4.95 oz of refrigerant from the system

**Example 2:** System has 45 ft of existing 5/16" liquid line. What is the charge adjustment?

Formula: (.40 oz/ft. x 45ft) – (9 oz.) = 9 oz.

Net result is to add 9 oz of refrigerant to the system

**NOTE**: Conditions must be favorable for charging by subcooling method. Indoor temperature must be 70°F to 80°F (21.1°C to 26.7°C), and outdoor temperature must be 70°F to 100°F (21.1°C to 37.8°C). If outside these conditions, adjust charge for long line sets by weigh-in method.

# LONG LINE APPLICATIONS

An application is considered Long Line, when the refrigerant level in the system requires the use of accessories to maintain acceptable refrigerant management for systems reliability. See Accessory Usage Guideline table for required accessories. Defining a system as long line depends on the liquid line diameter, actual length of the tubing, and vertical separation between the indoor and outdoor units.

For Air Conditioner systems, the chart below shows when an application is considered Long Line.

**AC with Puron® Refrigerant Long Line Description ft (m) Beyond these lengths, a TXV is required**

| Total Length | Outdoor Unit Above or Below Indoor Unit |
|---|---|
| TXV required beyond 50 ft. (15.2 m) | TXV required beyond 20 ft. (6.1 m) |

**AC with Puron® Refrigerant Long Line Description ft (m) (Beyond these lengths, long line accessories are required)**

| Liquid Line Size | Units On Same Level | Outdoor Below Indoor | Outdoor Above Indoor |
|---|---|---|---|
| 1/4 + TXV | No accessories needed within allowed lengths | No accessories needed within allowed lengths | 175 (53.3) |
| 5/16 + TXV | 120 (36.6) | 50 (15.2) vertical or 120 (36.6) total | 120 (36.6) |
| 3/8 + TXV | 80 (24.4) | 35 (10.7) vertical or 80 (24.4) total | 80 (24.4) |

**Note:** See Residential Piping and Long Line Guideline for details

# VAPOR LINE SIZING AND COOLING CAPACITY LOSS

Acceptable vapor line diameters provide adequate oil return to the compressor while avoiding excessive capacity loss. The suction line diameters shown in the chart below are acceptable for AC systems with Puron refrigerant:

**Vapor Line Sizing and Cooling Capacity Losses — Puron® Refrigerant 1-Stage Air Conditioner Applications**

| Unit Nominal Size (Btuh) | Maximum Liquid Line Diameters (In. OD) | Vapor Line Diameters (In. OD) | Cooling Capacity Loss (%) Total Equivalent Line Length ft. (m) 1-Stage AC with Puron | | | | | | | | |
|---|---|---|---|---|---|---|---|---|---|---|---|
| | | | 26–50 (7.9–15.2) | 51–80 (15.5–24.4) | 81–100 (24.7–30.5) | 101–125 (30.8–38.1) | 126–150 (38.4–45.7) | 151–175 (46.0–53.3) | 176–200 (53.6–61.0) | 201–225 (61.3–68.6) | 226–250 (68.9–76.2) |
| **18** | 3/8 | 1/2 | 1 | 2 | 3 | 5 | 6 | 7 | 8 | 9 | 11 |
| | | 5/8 | 0 | 1 | 1 | 1 | 2 | 2 | 2 | 3 | 3 |
| | | 3/4 | 0 | 0 | 0 | 0 | 1 | 1 | 1 | 1 | 1 |
| **24** | 3/8 | 5/8 | 0 | 1 | 2 | 2 | 3 | 3 | 4 | 5 | 5 |
| | | 3/4 | 0 | 0 | 1 | 1 | 1 | 1 | 1 | 2 | 2 |
| | | 7/8 | 0 | 0 | 0 | 0 | 0 | 1 | 1 | 1 | 1 |
| **30** | 3/8 | 5/8 | 1 | 2 | 3 | 3 | 4 | 5 | 6 | 7 | 8 |
| | | 3/4 | 0 | 0 | 1 | 1 | 1 | 2 | 2 | 2 | 3 |
| | | 7/8 | 0 | 0 | 0 | 0 | 1 | 1 | 1 | 1 | 1 |
| **36** | 3/8 | 5/8 | 1 | 2 | 4 | 5 | 6 | 8 | 9 | 10 | 12 |
| | | 3/4 | 0 | 1 | 1 | 2 | 2 | 3 | 3 | 4 | 4 |
| | | 7/8 | 0 | 0 | 0 | 1 | 1 | 1 | 1 | 2 | 2 |
| **42, 43** | 3/8 | 3/4 | 0 | 1 | 2 | 2 | 3 | 4 | 4 | 5 | 6 |
| | | 7/8 | 0 | 0 | 1 | 1 | 1 | 2 | 2 | 2 | 3 |
| | | 1 1/8 | 0 | 0 | 0 | 0 | 0 | 0 | 0 | 0 | 0 |
| **48** | 3/8 | 3/4 | 0 | 1 | 2 | 3 | 4 | 5 | 5 | 6 | 7 |
| | | 7/8 | 0 | 0 | 1 | 1 | 2 | 2 | 2 | 3 | 3 |
| | | 1 1/8 | 0 | 0 | 0 | 0 | 0 | 0 | 0 | 1 | 1 |
| **54, 61** | 3/8 | 3/4 | 1 | 2 | 4 | 5 | 6 | 7 | 9 | 10 | 11 |
| | | 7/8 | 0 | 1 | 2 | 2 | 3 | 4 | 4 | 5 | 5 |
| | | 1 1/8 | 0 | 0 | 0 | 1 | 1 | 1 | 1 | 1 | 1 |

Applications in this area may be long line and may have height restrictions. See the *Residential Piping and Long Line Guideline*.

# ACCESSORY THERMOSTATS

| PART NUMBER | DESCRIPTION |
|---|---|
| **TP−WEM01** | Côr™ Thermostat |
| **TP−PRH01−A** | edge™ Programmable Relative Humidity Thermostat |
| **TP−PAC01** | edge™ Programmable Thermostat |
| **TP−NRH01** | edge™ Non−Programmable Relative Humidity Thermostat |
| **TP−NAC01** | edge™ Non−Programmable Thermostat |
| **TC−WHS01** | Wi−Fi® Thermostat |
| **TC−PAC01** | Programmable Thermostat |
| **TC−NAC01** | Non−Programmable Thermostat |
| **TCSNAC01** | Non−Programmable Standard Screen Thermostat |

| THERMOSTAT ACCESSORIES | | |
|---|---|---|
| **PART NUMBER** | **DESCRIPTION** | **THERMOSTATS USED WITH** |
| **TP−EXP** | edge™ EXP® Card | Programmable edge™ thermostats |
| **TSTATCCSEN01−B** | Outdoor Air Temperature Sensor | TP−Pxx, TP−Nxx |
| **TSTATXXCNV10** | Thermostat Conversion Kit (4 to 5 wire) − 10 pack | All Carrier® branded thermostats |
| **TX−MBP01** | Medium Decorative Backplate | TC−Nxx |
| **TX−LBP01** | Large Decorative Backplate | TP−Pxx, TP−Nxx, TC−Pxx |

# ACCESSORIES

| Accessory Kit Number | Description | 018 | 024 | 030 | 036 | 042 | 043 | 048 | 054 | 061 |
|---|---|---|---|---|---|---|---|---|---|---|
| HB32GR229 | FAN MOTOR | | | | | | S | | | |
| HB33CQ230 | FAN MOTOR | | S | | | | | | | |
| HB37CQ228 | FAN MOTOR | | | | S | | | | | |
| HC32GR237 | FAN MOTOR | S | | | | | | | | |
| HC34GE239 | FAN MOTOR | | | X | | | | | | |
| HC36GE232 | FAN MOTOR | | | | | X | | | | |
| HC40GE228 | FAN MOTOR | | | | | | | X | X | |
| HC40GR236 | FAN MOTOR | | | | | | | | | X |
| KAACH1201AAA | CRANKCASE HEATER | | | | | | | X | | |
| KAACH1401AAA | CRANKCASE HEATER | X | X | X | | | | | | |
| KAACH1601AAA | CRANKCASE HEATER | | | | | X | X | S | S | S |
| KAACH1701AAA | CRANKCASE HEATER | | | | X | | | | | |
| KAACS0201PTC | PTC KIT | | X | X | X | X | X | X | X | X |
| KAAHI0501PUR | PRESSURE SWITCH | X | X | X | X | X | X | X | X | X |
| KAALP0401PUR | PRESSURE SWITCH | X | X | X | X | X | X | X | X | X |
| KAALS0201LLS | SOLENOID VALVE | X | X | X | X | X | X | X | X | X |
| KAATD0101TDR | TIME DELAY | X | X | X | X | X | X | X | X | X |
| KAAWS0101AAA | WINTER START KIT | X | X | X | X | X | X | X | X | X |
| KHASS0606MPK | SNOW STAND | | | | | | | X | | |
| KSACY0101AAA | CYCLE PROTECTOR | X | X | X | X | X | X | X | X | X |
| KSAFT0101AAA | FREEZE THERMOSTAT | X | X | X | X | X | X | X | X | X |
| KSAHS1501AAA | HARD START KIT | | | X | X | | X | | | X |
| KSAHS1701AAA | HARD START KIT | X | X | | | X | | X | X | |
| KSALA0301410 | LOW AMBIENT KIT | X | X | X | X | X | X | X | X | X |
| KSALA0601AAA | MOTORMASTER KIT | X | X | X | X | X | X | X | X | X |
| KSASF0201AAA | SUPPORT FEET | X | X | X | X | X | X | X | X | X |
| KSASH0601COP | SOUND BLANKET | X | X | X | X | X | | | | |
| KSASH2401COP | SOUND BLANKET | | | | | | X | X | X | X |
| KSATX0201PUR | TXV KIT, Copper | X | | X | | | | | | |
| KSATX0301PUR | TXV KIT, Copper | | X | | X | | X | | | |
| KSATX0401PUR | TXV KIT, Copper | | | | | X | | X | X | X |
| KSBTX0201PUR | TXV KIT, Aluminum | X | | X | | | | | | |
| KSBTX0301PUR | TXV KIT, Aluminum | | X | | X | | X | | | |
| KSBTX0401PUR | TXV KIT, Aluminum | | | | | X | | X | X | X |
| LA01RA339 | FAN | | | | | | | | | X |

S = Standard
X = Accessory

# ACCESSORY USAGE GUIDELINE

| ACCESSORY | REQUIRED FOR LOW–AMBIENT COOLING APPLICATIONS (Below 55°F/12.8°C) | REQUIRED FOR LONG LINE APPLICATIONS* (Over 80 ft./24.38 m) | REQUIRED FOR SEA COAST APPLICATIONS (Within 2 miles/3.22 km) |
|---|---|---|---|
| **Ball Bearing Fan Motor** | Yes† | No | No |
| **Compressor Start Assist Capacitor and Relay** | Yes | Yes | No |
| **Crankcase Heater** | Yes | Yes | No |
| **Evaporator Freeze Thermostat** | Yes | No | No |
| **Hard Shut–Off TXV** | Yes | Yes | Yes |
| **Liquid Line Solenoid Valve** | No | No | No |
| **Motor Master® Control or Low–ambient Pressure Switch** | Yes‡ | No | No |
| **Support Feet** | Recommended | No | Recommended |
| **Winter Start Control** | Yes | No | No |

* For tubing line sets between 80 and 200 ft. (24.38 and 60.96 m) and/or 35 ft. (10.7 m) vertical differential, refer to Residential Split–System Longline Application Guideline.

† Additional requirement for Low–Ambient Controller (full modulation feature) MotorMaster® Control.

‡ If unit equipped with ECM OD motor, both motor and fan need to be replaced per unit accessory guide to work properly. Unit will not meet AHRI rated efficiency once motor and fan are replaced to use this accessory.

## Accessory Description and Usage (Listed Alphabetically)

**1. Ball-Bearing Fan Motor**

A fan motor with ball bearings which permits speed reduction while maintaining bearing lubrication.

Usage Guideline:

Required on all units when MotorMaster® is used.

**2. Compressor Start Assist - Capacitor and Relay**

Start capacitor and relay gives a ”hard” boost to compressor motor at each start up.

Usage Guideline:

Required for reciprocating compressors in the following applications:

- Long line
- Low ambient cooling
- Hard shut off expansion valve on indoor coil
- Liquid line solenoid on indoor coil

Required for single-phase scroll compressors in the following applications:

- Long line
- Low ambient cooling

Suggested for all compressors in areas with a history of low voltage problems.

**3. Compressor Start Assist — PTC Type**

Solid state electrical device which gives a ”soft” boost to the compressor at each start-up.

Usage Guideline:

Suggested in installations with marginal power supply.

**4. Crankcase Heater**

An electric resistance heater which mounts to the base of the compressor to keep the lubricant warm during off cycles. Improves compressor lubrication on restart and minimizes the chance of liquid slugging.

Usage Guideline:

Required in low ambient cooling applications.

Required in long line applications.

Suggested in all commercial applications.

**5. Cycle Protector**

The cycle protector is designed to prevent compressor short cycling. This control provides an approximate 5-minute delay after power to the compressor has been interrupted for any reason, including power outage, protector control trip, thermostat jiggling, or normal cycling.

**6. Evaporator Freeze Thermostat**

An SPST temperature-actuated switch that stops unit operation when evaporator reaches freeze-up conditions.

Usage Guideline:

Required when low ambient kit has been added.

**7. Low-Ambient Pressure Switch Kit**

A long life pressure switch which is mounted to outdoor unit service valve. It is designed to cycle the outdoor fan motor in order to maintain head pressure within normal operating limits (approximately 100 psig to 225 psig). The control will maintain working head pressure at low-ambient temperatures down to 0°F (-18°C) when properly installed.

Usage Guideline:

A Low-Ambient Pressure Switch or MotorMaster® Low-Ambient Controller must be used when cooling operation is used at outdoor temperatures below 55°F (12.8°C).

**8. MotorMaster® Low-Ambient Controller**

A fan-speed control device activated by a temperature sensor, designed to control condenser fan motor speed in response to the saturated, condensing temperature during operation in cooling mode only. For outdoor temperatures down to -10°F/-23°C), it maintains condensing temperature at 100°F ±10°F (37.8°C ± 5.5°C).

Usage Guideline:

A MotorMaster® Low Ambient Controller or Low-Ambient Pressure Switch must be used when cooling operation is used at outdoor temperatures below 55°F (12.8°C).

Suggested for all commercial applications.

Note: If utilizing Motor Master or low ambient cooling kits on a unit with an ECM motor, the motor will not function properly/reliably. The ECM motor will need to be replaced with a PSC fan motor and fan blade specified in the accessory lists for the unit and wired per the wiring diagram.

## Accessory Description and Usage (Listed Alphabetically) (Continued)

**9. Outdoor Air Temperature Sensor**

Designed for use with Carrier Thermostats listed in this publication. This device enables the thermostat to display the outdoor temperature. This device also

is required to enable special thermostat features such as auxiliary heat lock out.

Usage Guideline:

Suggested for all Carrier thermostats listed in this publication.

**10. Support Feet**

Four stick-on plastic feet that raise the unit 4 in. (101.6 mm) above the mounting pad. This allows sand, dirt, and other debris to be flushed from the unit base, minimizing corrosion.

Usage Guideline:

Suggested in the following applications:

Coastal installations.

Windy areas or where debris is normally circulating.

Rooftop installations.

For improved sound ratings.

**11. Thermostatic Expansion Valve (TXV)**

A modulating flow-control valve which meters refrigerant liquid flow rate into the evaporator in response to the superheat of the refrigerant gas leaving the evaporator.

Kit includes valve, adapter tubes, and external equalizer tube. Hard shut off types are available.

**NOTE**: When using a hard shut off TXV with single phase reciprocating compressors, a Compressor Start Assist Capacitor and Relay is required.

Usage Guideline:

Required to achieve AHRI ratings in certain equipment combinations. Refer to combination ratings.

Hard shut off TXV or LLS required in air conditioner long line applications.

Required for use on all zoning systems.

**12. Time-Delay Relay**

An SPST delay relay which briefly continues operation of indoor blower motor to provide additional cooling after the compressor cycles off.

**NOTE**: Most indoor unit controls include this feature. For those that do not, use the guideline below.

Usage Guideline:

For improved efficiency ratings for certain combinations of indoor and outdoor units. Refer to AHRI Unitary Directory.

**13. Winter Start Control**

This control is designed to alleviate nuisance opening of the low-pressure switch by bypassing it for the first 3 minutes of operation.

# ELECTRICAL DATA

| UNIT SIZE – SERIES | V/PH | OPER VOLTS* | | COMPR | | FAN | MCA | MAX FUSE† or CKT BRK AMPS |
|---|---|---|---|---|---|---|---|---|
| | | MAX | MIN | LRA | RLA | FLA | | |
| **18–A** | 208/230/1–60 | 253 | 197 | 47.5 | 9.0 | 0.40 | 11.7 | 20 |
| **24–A** | | | | 62.9 | 10.9 | 0.77 | 14.4 | 25 |
| **30–A** | | | | 67.8 | 12.8 | 0.75 | 16.8 | 25 |
| **36–B** | | | | 79.0 | 13.6 | 1.20 | 18.2 | 30 |
| **42–B** | | | | 109.0 | 16.7 | 0.90 | 21.8 | 35 |
| **43–B** | | | | 109.0 | 16.7 | 0.50 | 21.4 | 35 |
| **48–B** | | | | 109.0 | 19.9 | 1.20 | 26.1 | 40 |
| **54–B** | | | | 135.0 | 21.4 | 1.20 | 28.0 | 40 |
| **61–B** | | | | 152.5 | 23.7 | 2.80 | 32.4 | 50 |

* Permissible limits of the voltage range at which the unit will operate satisfactorily

† Time–Delay fuse.

**FLA** – Full Load Amps
**LRA** – Locked Rotor Amps
**MCA** – Minimum Circuit Amps
**RLA** – Rated Load Amps
**NOTE**: Control circuit is 24V on all units and requires external power source. Copper wire must be used from service disconnect to unit. All motors/compressors contain internal overload protection.

Complies with 2010 requirements of ASHRAE Standards 90.1

# A–WEIGHTED SOUND POWER (dBA)

| A–WEIGHTED SOUND POWER (dBA) WITH SOUND SHIELD | | | | | | | | |
|---|---|---|---|---|---|---|---|---|
| UNIT SIZE | STANDARD RATING | TYPICAL OCTAVE BAND SPECTRUM (without tone adjustment) | | | | | | |
| | | 125 | 250 | 500 | 1000 | 2000 | 4000 | 8000 |
| **18** | 75 | 45 | 53 | 58 | 62 | 61 | 55 | 49 |
| **24** | 72 | 48 | 55 | 59 | 63 | 59 | 55 | 49 |
| **30** | 73 | 50 | 54 | 62 | 66 | 60 | 57 | 51 |
| **36** | 69 | 48 | 59 | 57 | 59 | 56 | 51 | 40 |
| **42** | 72 | 63 | 57 | 59 | 61 | 57 | 55 | 51 |
| **43** | 70 | 72 | 66 | 67 | 65 | 62 | 60 | 55 |
| **48** | 73 | 55 | 61 | 64 | 63 | 60 | 57 | 48 |
| **54** | 73 | 54 | 59 | 63 | 63 | 60 | 56 | 48 |
| **61** | 73 | 67 | 68 | 68 | 71 | 63 | 55 | 52 |

| A–WEIGHTED SOUND POWER (dBA) WITHOUT SOUND SHIELD | | | | | | | | |
|---|---|---|---|---|---|---|---|---|
| UNIT SIZE | STANDARD RATING | TYPICAL OCTAVE BAND SPECTRUM (without tone adjustment) | | | | | | |
| | | 125 | 250 | 500 | 1000 | 2000 | 4000 | 8000 |
| **18** | 75 | 47 | 56 | 60 | 64 | 60 | 54 | 47 |
| **24** | 74 | 48 | 54 | 60 | 64 | 59 | 56 | 50 |
| **30** | 74 | 48 | 55 | 62 | 67 | 61 | 57 | 51 |
| **36** | 71 | 49 | 60 | 59 | 61 | 59 | 55 | 47 |
| **42** | 74 | 64 | 57 | 60 | 61 | 58 | 56 | 53 |
| **43** | 71 | 73 | 66 | 68 | 67 | 63 | 61 | 56 |
| **48** | 73 | 55 | 61 | 64 | 63 | 60 | 57 | 48 |
| **54** | 73 | 54 | 59 | 63 | 63 | 60 | 56 | 48 |
| **61** | 74 | 66 | 67 | 68 | 72 | 64 | 60 | 57 |

**NOTE**: Tested in compliance with AHRI 270–1995 (not listed with AHRI)

# METERING DEVICE

| UNIT SIZE–SERIES | INDOOOR | REQUIRED SUBCOOLING °F (°C) |
|---|---|---|
| **18–A** | TXV* | 13.0 (7.22) |
| **24–A** | | 10.0 (5.56) |
| **30–A** | | 12.5 (6.94) |
| **36–B** | | 11.0 (6.11) |
| **42–B** | | 10.0 (5.56) |
| **43–B** | | 12.0 (6.67) |
| **48–B** | | 8.0 (4.44) |
| **54–B** | | 9.0 (5.00) |
| **61–B** | | 9.0 (5.00) |

* TXV must be ordered separately when indoor coil is not equipped with a TXV. TXV must be hard–shutoff type.

# DIMENSIONS

| UNIT | SERIES | ELECTRICAL CHARACTERISTICS | | | | A | | B | | C | | D | | E | | F | | G | | H | | I | | J | | K | | OPERATING WEIGHT | | SHIPPING WEIGHT | | SHIPPING LENGTH / WIDTH (Sq.) | | SHIPPING HEIGHT | |
|---|---|---|---|---|---|---|---|---|---|---|---|---|---|---|---|---|---|---|---|---|---|---|---|---|---|---|---|---|---|---|---|---|---|---|---|
| | | | | | | INCH | MM | INCH | MM | INCH | MM | INCH | MM | INCH | MM | INCH | MM | INCH | MM | INCH | MM | INCH | MM | INCH | MM | INCH | MM | Lbs | Kgs | Lbs | Kgs | INCH | MM | INCH | MM |
| CA16NW01800GAAAA | A | Y | N | N | N | 25 3/4 | 654.0 | 25 5/16 | 642.4 | 3/4 | 19.1 | 4 7/16 | 113.0 | 21 1/4 | 539.9 | 9 1/8 | 231.3 | 5/16 | 7.9 | 3 | 76.2 | 13 | 330.2 | 15 1/4 | 387.4 | 9 3/4 | 247.7 | 122 | 55.3 | 145 | 65.8 | 26 3/4 | 679.9 | 26 15/16 | 684.8 |
| CA16NW02400GAAAA | A | Y | N | N | N | 25 3/4 | 654.0 | 32 1/16 | 815.1 | 3/4 | 19.1 | 4 7/16 | 113.0 | 21 1/4 | 539.9 | 9 1/8 | 231.3 | 5/16 | 7.9 | 3 | 76.2 | 13 3/8 | 339.7 | 13 1/4 | 336.6 | 15 1/16 | 382.6 | 123 | 55.8 | 148 | 67.1 | 26 3/4 | 679.9 | 33 3/4 | 857.6 |
| CA16NW03000GAAAA | A | Y | N | N | N | 31 3/16 | 792.5 | 38 7/16 | 977.1 | 3/4 | 19.1 | 6 9/16 | 166.1 | 24 11/16 | 626.3 | 9 1/8 | 231.3 | 5/16 | 7.9 | 3 | 76.2 | 15 3/4 | 400.1 | 16 | 406.4 | 13 7/16 | 341.3 | 164 | 74.4 | 201 | 91.2 | 32 3/16 | 817.9 | 40 1/16 | 1017.7 |
| CA16NW03600GABAA | B | Y | N | N | N | 35 | 889.0 | 28 11/16 | 728.7 | 7/8 | 22.2 | 6 9/16 | 166.1 | 28 7/16 | 722.8 | 9 1/8 | 231.3 | 5/16 | 7.9 | 3 | 76.2 | 16 | 406.4 | 16 | 406.4 | 13 | 330.2 | 165 | 74.8 | 182 | 82.6 | 36 | 914.9 | 30 3/8 | 771.2 |
| CA16NW04200GABAA | B | Y | N | N | N | 35 | 889.0 | 28 11/16 | 728.7 | 7/8 | 22.2 | 6 9/16 | 166.1 | 28 7/16 | 722.8 | 9 1/8 | 231.3 | 5/16 | 7.9 | 3 | 76.2 | 17 5/8 | 447.7 | 16 1/2 | 419.1 | 10 1/4 | 260.4 | 210 | 95.3 | 231 | 104.8 | 36 | 914.9 | 30 3/8 | 771.2 |
| CA16NW04300GABAA | B | Y | N | N | N | 35 | 889.0 | 38 7/8 | 987.8 | 7/8 | 22.2 | 6 9/16 | 166.1 | 28 7/16 | 722.8 | 9 1/8 | 231.3 | 5/16 | 7.9 | 3 | 76.2 | 16 1/2 | 419.1 | 16 1/2 | 419.1 | 15 | 381.0 | 257 | 116.6 | 283 | 128.4 | 36 | 914.9 | 40 9/16 | 1030.4 |
| CA16NW04800GABAA | B | Y | N | N | N | 35 | 889.0 | 38 7/8 | 987.8 | 7/8 | 22.2 | 6 9/16 | 166.1 | 28 7/16 | 722.8 | 9 1/8 | 231.3 | 5/16 | 7.9 | 3 | 76.2 | 16 1/2 | 419.1 | 16 1/2 | 419.1 | 15 | 381.0 | 264 | 119.7 | 290 | 131.5 | 36 | 914.9 | 40 9/16 | 1030.4 |
| CA16NW05400GABAA | B | Y | N | N | N | 35 | 889.0 | 45 11/16 | 1160.5 | 7/8 | 22.2 | 6 9/16 | 166.1 | 28 7/16 | 722.8 | 9 1/8 | 231.3 | 5/16 | 7.9 | 3 | 76.2 | 16 1/2 | 419.1 | 17 | 431.8 | 16 1/4 | 412.8 | 272 | 123.4 | 299 | 135.6 | 36 | 914.9 | 47 3/8 | 1203.2 |
| CA16NW06100GABAA | B | Y | N | N | N | 35 | 889.0 | 45 11/16 | 1160.5 | 7/8 | 22.2 | 6 9/16 | 166.1 | 28 7/16 | 722.8 | 9 1/8 | 231.3 | 5/16 | 7.9 | 3 | 76.2 | 17 1/8 | 435.0 | 18 3/8 | 466.7 | 21 1/4 | 539.8 | 280 | 127.0 | 308 | 139.7 | 36 | 914.9 | 47 3/8 | 1203.2 |

| 208-230-1-60 | 208/230-3-60 | 460-3-60 | 575-3-60 | Y=YES N=NO |
|---|---|---|---|---|

NOTES:

1. CENTER OF GRAVITY ⊕ .

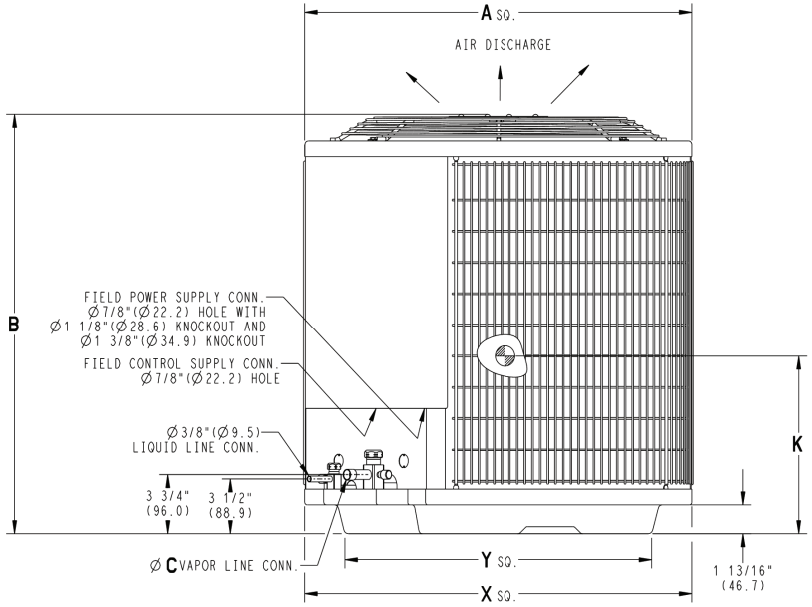


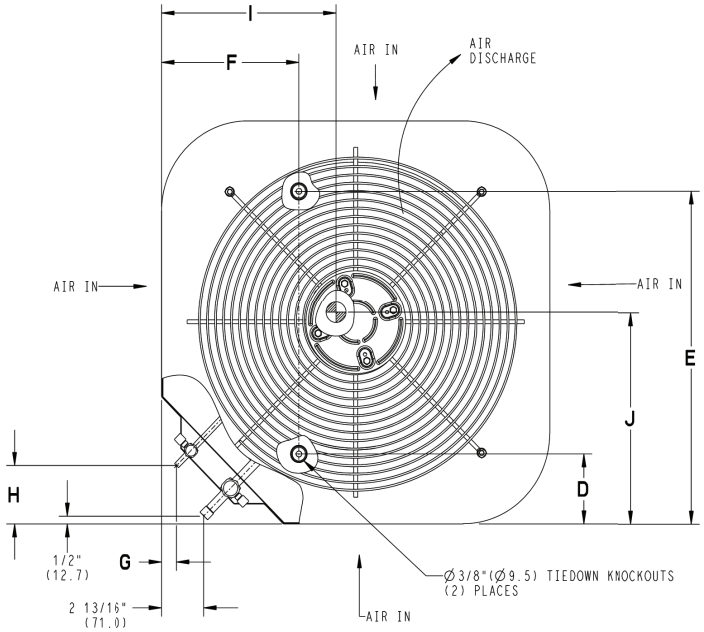


| UNIT SIZE | "X" MINIMUM GROUND MOUNTING PAD APPLICATION DIMENSIONS | | "Y" MINIMUM ROOF-TOP MOUNTING PAD APPLICATION DIMENSIONS | |
|---|---|---|---|---|
| - | 23 1/8 | 587.3 | 17 7/8 | 454.6 |
| 18,24 | 25 3/4 | 654.0 | 20 7/16 | 518.5 |
| 30 | 31 3/16 | 792.5 | 22 15/16 | 583.2 |
| 36,42,43,48,54,61 | 35 | 889.0 | 26 3/4 | 679.7 |

NOTE: ALL DIMENSIONS IN INCH (MM)

U.S. ECCN: Not Subject to Regulation (N.S.R.)

SD5292-4 REV. E

# CLEARANCES

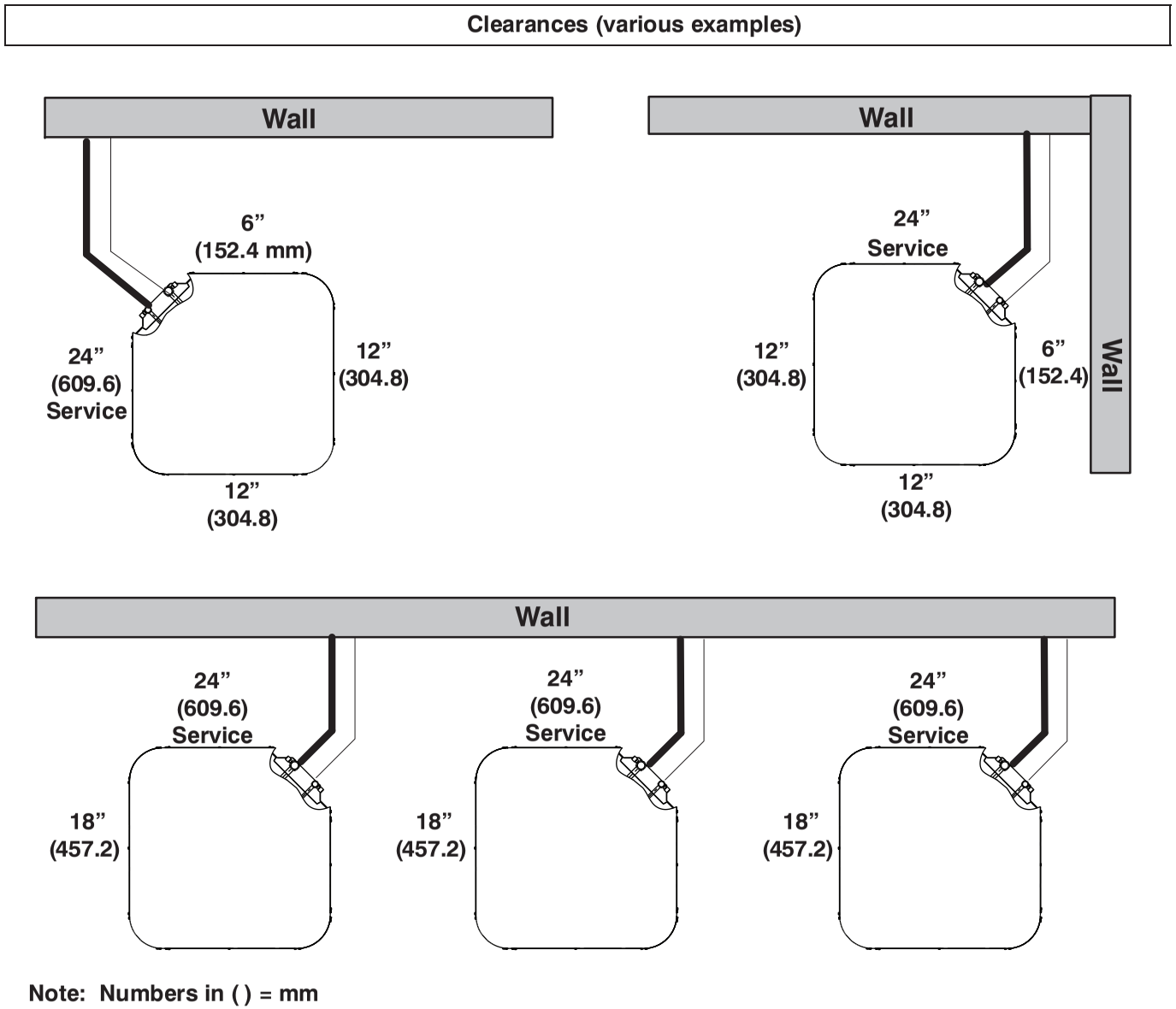


**IMPORTANT**: When installing multiple units in an alcove, roof well, or partially enclosed area, ensure there is adequate ventilation to prevent re-circulation of discharge air.

# TESTED AHRI COMBINATION RATINGS

**NOTE: Ratings contained in this document are subject to change at any time.**

**For AHRI ratings certificates, please refer to the AHRI directory www.ahridirectory.org**

**Additional ratings and system combinations can be accessed via the Carrier database at: www.MyCarrierRatings.com**

**For performance data at specific application &/or design conditions with various indoor unit combinations, the equipment performance calculator can be accessed at : http://rpmob.wrightsoft.com/**

| UNIT SIZE – SERIES | INDOOR MODEL | AHRI STANDARD RATINGS | | | | | | FURNACE MODEL |
|---|---|---|---|---|---|---|---|---|
| | | COOLING | | | | | | |
| | | CAPACITY | FACTORY ENHANCE | SEER | | | EER | |
| | | | | STANDARD | TDR | TXV | | |
| **018–A** | CAP**1917AL* | 17,200 | TXV | | 14.50 | | 12.50 | |
| **024–A** | CAP**2517AL* | 24,000 | TXV | | 14.50 | | 12.50 | |
| **030–A** | CAP**3721AL* | 29,400 | TXV | | 14.50 | | 12.50 | |
| **036–B** | CAP**3721AL* | 35,000 | TXV | | 14.50 | | 12.50 | |
| **042–B** | CAP**4321AL* | 40,000 | TXV | | 14.50 | | 12.50 | |
| **043–B** | CAP**4321AL* | 40,000 | TXV | | 14.00 | | 12.20 | |
| **048–B** | CAP**6024AL* | 46,000 | TXV | | 14.50 | | 12.50 | |
| **054–B** | CNPV*6124AL* | 55,000 | TXV | | 15.00 | | 12.50 | |
| **061–B** | CNPV*6124AL* | 57,500 | TXV | | 15.00 | | 12.50 | |

**AHRI** — Air Conditioning, Heating & Refrigeration Institute
**EER** — Energy Efficiency Ratio – 80°F (26.6°C) indoor db/67°F (19.4°C) indoor wb & 95°F (35°C) outdoor wb.
**SEER** — Seasonal Energy Efficiency Ratio
**TDR** —Time–Delay Relay. In most cases, only one method should be used to achieve TDR function. Using more than one method in a system may cause degradation in performance.
Use either the accessory Time–Delay Relay, KAATD0101TDR, or a furnace equipped with TDR. Most Carrier furnaces are equipped with TDR.

**NOTES:**

1. Ratings are net values reflecting the effects of circulating fan motor heat. Supplemental electric heat is not included.
2. Tested outdoor/indoor combinations have been tested in accordance with DOE test procedures for central air conditioners. Ratings for other combinations are determined under DOE computer simulation procedures.
3. Determine actual CFM values obtainable for your system by referring to fan performance data in fan coil or furnace coil literature.
4. Do not apply with capillary tube coils as performance and reliability are significantly affected.

# DETAILED COOLING CAPACITIES#

| EVAPORATOR AIR | | CONDENSER ENTERING AIR TEMPERATURES °F (°C) | | | | | | | | | | | | | | | | | |
|---|---|---|---|---|---|---|---|---|---|---|---|---|---|---|---|---|---|---|---|
| | | 75 (23.9) | | | 85 (29.4) | | | 95 (35) | | | 105 (40.6) | | | 115 (46.1) | | | 125 (51.7) | | |
| CFM | EWB °F (°C) | Capacity MBtuh | | Total Sys. KW** | Capacity MBtuh | | Total Sys. KW** | Capacity MBtuh | | Total Sys. KW** | Capacity MBtuh | | Total Sys. KW** | Capacity MBtuh | | Total Sys. KW** | Capacity MBtuh | | Total Sys. KW** |
| | | Total | Sens‡ | | Total | Sens‡ | | Total | Sens‡ | | Total | Sens‡ | | Total | Sens‡ | | Total | Sens‡ | |
| **CA16NW018 – A Outdoor Section With CAP**1917AL* Indoor Section** | | | | | | | | | | | | | | | | | | | |
| 525 | 72 (22.2) | 20.56 | 10.96 | 1.11 | 19.77 | 10.67 | 1.25 | 18.93 | 10.35 | 1.40 | 17.98 | 10.00 | 1.58 | 16.91 | 9.62 | 1.77 | 15.70 | 9.18 | 2.00 |
| | 67 (19.4) | 18.80 | 13.55 | 1.12 | 18.03 | 13.23 | 1.26 | 17.20 | 12.89 | 1.41 | 16.29 | 12.52 | 1.58 | 15.26 | 12.11 | 1.78 | 14.11 | 11.66 | 2.00 |
| | 63 (17.2)†† | 17.52 | 13.07 | 1.13 | 16.75 | 12.73 | 1.27 | 15.94 | 12.37 | 1.42 | 15.04 | 11.98 | 1.59 | 14.05 | 11.55 | 1.78 | 12.94 | 11.08 | 2.01 |
| | 62 (16.7) | 17.21 | 16.10 | 1.13 | 16.46 | 15.76 | 1.27 | 15.67 | 15.40 | 1.42 | 14.89 | 14.89 | 1.59 | 14.11 | 14.11 | 1.78 | 13.23 | 13.23 | 2.00 |
| | 57 (13.9) | 16.82 | 16.82 | 1.14 | 16.21 | 16.21 | 1.27 | 15.57 | 15.57 | 1.42 | 14.86 | 14.86 | 1.59 | 14.08 | 14.08 | 1.78 | 13.20 | 13.20 | 2.00 |
| 600 | 72 (22.2) | 20.91 | 11.56 | 1.14 | 20.10 | 11.27 | 1.27 | 19.23 | 10.95 | 1.43 | 18.25 | 10.60 | 1.60 | 17.16 | 10.22 | 1.80 | 15.91 | 9.78 | 2.02 |
| | 67 (19.4) | 19.14 | 14.52 | 1.15 | 18.35 | 14.21 | 1.28 | 17.50 | 13.87 | 1.44 | 16.56 | 13.49 | 1.61 | 15.51 | 13.08 | 1.80 | 14.33 | 12.62 | 2.03 |
| | 63 (17.2)†† | 17.86 | 13.98 | 1.16 | 17.08 | 13.64 | 1.29 | 16.24 | 13.28 | 1.44 | 15.32 | 12.88 | 1.61 | 14.30 | 12.45 | 1.81 | 13.16 | 11.97 | 2.03 |
| | 62 (16.7) | 17.61 | 17.44 | 1.16 | 16.94 | 16.94 | 1.29 | 16.27 | 16.27 | 1.44 | 15.53 | 15.53 | 1.61 | 14.70 | 14.70 | 1.81 | 13.77 | 13.77 | 2.03 |
| | 57 (13.9) | 17.54 | 17.54 | 1.16 | 16.91 | 16.91 | 1.29 | 16.24 | 16.24 | 1.44 | 15.50 | 15.50 | 1.61 | 14.68 | 14.68 | 1.81 | 13.75 | 13.75 | 2.03 |
| 675 | 72 (22.2) | 21.16 | 12.15 | 1.16 | 20.33 | 11.86 | 1.30 | 19.44 | 11.54 | 1.46 | 18.44 | 11.19 | 1.63 | 17.32 | 10.80 | 1.83 | 16.05 | 10.37 | 2.05 |
| | 67 (19.4) | 19.39 | 15.48 | 1.17 | 18.58 | 15.16 | 1.31 | 17.72 | 14.81 | 1.46 | 16.77 | 14.44 | 1.63 | 15.69 | 14.03 | 1.83 | 14.49 | 13.56 | 2.05 |
| | 63 (17.2)†† | 18.12 | 14.87 | 1.18 | 17.31 | 14.52 | 1.32 | 16.46 | 14.16 | 1.47 | 15.53 | 13.77 | 1.64 | 14.49 | 13.33 | 1.84 | 13.33 | 12.84 | 2.06 |
| | 62 (16.7) | 18.17 | 18.17 | 1.18 | 17.52 | 17.52 | 1.32 | 16.82 | 16.82 | 1.47 | 16.05 | 16.05 | 1.64 | 15.19 | 15.19 | 1.83 | 14.22 | 14.22 | 2.06 |
| | 57 (13.9) | 18.14 | 18.14 | 1.18 | 17.49 | 17.49 | 1.32 | 16.79 | 16.79 | 1.47 | 16.03 | 16.03 | 1.64 | 15.17 | 15.17 | 1.83 | 14.20 | 14.20 | 2.06 |

| EVAPORATOR AIR | | 75 (23.9) | | | 85 (29.4) | | | 95 (35) | | | 105 (40.6) | | | 115 (46.1) | | | 125 (51.7) | | |
|---|---|---|---|---|---|---|---|---|---|---|---|---|---|---|---|---|---|---|---|
| CFM | EWB °F (°C) | Capacity MBtuh | | Total Sys. KW** | Capacity MBtuh | | Total Sys. KW** | Capacity MBtuh | | Total Sys. KW** | Capacity MBtuh | | Total Sys. KW** | Capacity MBtuh | | Total Sys. KW** | Capacity MBtuh | | Total Sys. KW** |
| | | Total | Sens‡ | | Total | Sens‡ | | Total | Sens‡ | | Total | Sens‡ | | Total | Sens‡ | | Total | Sens‡ | |
| **CA16NW024 – A Outdoor Section With CAP**2517AL* Indoor Section** | | | | | | | | | | | | | | | | | | | |
| 700 | 72 (22.2) | 28.74 | 15.29 | 1.56 | 27.59 | 14.86 | 1.73 | 26.38 | 14.41 | 1.92 | 25.05 | 13.92 | 2.13 | 23.62 | 13.40 | 2.38 | 21.98 | 12.81 | 2.67 |
| | 67 (19.4) | 26.23 | 18.87 | 1.57 | 25.15 | 18.42 | 1.73 | 24.00 | 17.95 | 1.92 | 22.76 | 17.44 | 2.14 | 21.38 | 16.88 | 2.39 | 19.89 | 16.29 | 2.68 |
| | 63 (17.2)†† | 24.41 | 18.18 | 1.57 | 23.37 | 17.72 | 1.74 | 22.28 | 17.23 | 1.92 | 21.09 | 16.71 | 2.14 | 19.80 | 16.15 | 2.39 | 18.41 | 15.56 | 2.69 |
| | 62 (16.7) | 23.90 | 22.33 | 1.57 | 22.89 | 21.86 | 1.74 | 21.83 | 21.35 | 1.92 | 20.70 | 20.70 | 2.14 | 19.68 | 19.68 | 2.39 | 18.58 | 18.58 | 2.69 |
| | 57 (13.9) | 23.23 | 23.23 | 1.57 | 22.43 | 22.43 | 1.74 | 21.59 | 21.59 | 1.93 | 20.66 | 20.66 | 2.14 | 19.65 | 19.65 | 2.39 | 18.55 | 18.55 | 2.69 |
| 800 | 72 (22.2) | 29.24 | 16.13 | 1.60 | 28.05 | 15.70 | 1.77 | 26.78 | 15.24 | 1.95 | 25.44 | 14.75 | 2.17 | 23.93 | 14.22 | 2.42 | 22.24 | 13.63 | 2.71 |
| | 67 (19.4) | 26.71 | 20.21 | 1.60 | 25.57 | 19.75 | 1.77 | 24.40 | 19.27 | 1.96 | 23.11 | 18.76 | 2.17 | 21.69 | 18.20 | 2.42 | 20.14 | 17.59 | 2.72 |
| | 63 (17.2)†† | 24.89 | 19.44 | 1.61 | 23.82 | 18.97 | 1.77 | 22.69 | 18.48 | 1.96 | 21.45 | 17.94 | 2.18 | 20.10 | 17.37 | 2.43 | 18.66 | 16.76 | 2.72 |
| | 62 (16.7) | 24.44 | 24.12 | 1.61 | 23.45 | 23.45 | 1.77 | 22.55 | 22.55 | 1.96 | 21.57 | 21.57 | 2.17 | 20.47 | 20.47 | 2.43 | 19.28 | 19.28 | 2.72 |
| | 57 (13.9) | 24.26 | 24.26 | 1.61 | 23.41 | 23.41 | 1.77 | 22.52 | 22.52 | 1.96 | 21.54 | 21.54 | 2.17 | 20.44 | 20.44 | 2.43 | 19.25 | 19.25 | 2.72 |
| 900 | 72 (22.2) | 29.61 | 16.95 | 1.64 | 28.37 | 16.51 | 1.80 | 27.06 | 16.05 | 1.99 | 25.66 | 15.55 | 2.20 | 24.14 | 15.03 | 2.45 | 22.40 | 14.43 | 2.75 |
| | 67 (19.4) | 27.04 | 21.51 | 1.64 | 25.89 | 21.05 | 1.81 | 24.68 | 20.57 | 1.99 | 23.37 | 20.05 | 2.21 | 21.92 | 19.48 | 2.46 | 20.33 | 18.85 | 2.75 |
| | 63 (17.2)†† | 25.25 | 20.65 | 1.64 | 24.14 | 20.17 | 1.81 | 22.97 | 19.67 | 2.00 | 21.72 | 19.14 | 2.21 | 20.33 | 18.55 | 2.47 | 18.85 | 17.92 | 2.76 |
| | 62 (16.7) | 25.16 | 25.16 | 1.64 | 24.26 | 24.26 | 1.81 | 23.31 | 23.31 | 2.00 | 22.28 | 22.28 | 2.21 | 21.12 | 21.12 | 2.46 | 19.86 | 19.86 | 2.75 |
| | 57 (13.9) | 25.13 | 25.13 | 1.64 | 24.23 | 24.23 | 1.81 | 23.28 | 23.28 | 2.00 | 22.25 | 22.25 | 2.21 | 21.09 | 21.09 | 2.46 | 19.83 | 19.83 | 2.75 |

See notes on page 16

# DETAILED COOLING CAPACITIES# CONTINUED

| EVAPORATOR AIR | | CONDENSER ENTERING AIR TEMPERATURES °F (°C) | | | | | | | | | | | | | | | | | |
|---|---|---|---|---|---|---|---|---|---|---|---|---|---|---|---|---|---|---|---|
| | | 75 (23.9) | | | 85 (29.4) | | | 95 (35) | | | 105 (40.6) | | | 115 (46.1) | | | 125 (51.7) | | |
| CFM | EWB °F (°C) | Capacity MBtuh | | Total Sys. KW** | Capacity MBtuh | | Total Sys. KW** | Capacity MBtuh | | Total Sys. KW** | Capacity MBtuh | | Total Sys. KW** | Capacity MBtuh | | Total Sys. KW** | Capacity MBtuh | | Total Sys. KW** |
| | | Total | Sens‡ | | Total | Sens‡ | | Total | Sens‡ | | Total | Sens‡ | | Total | Sens‡ | | Total | Sens‡ | |
| **CA16NW030–A Outdoor Section With CAP**3721AL* Indoor Section** | | | | | | | | | | | | | | | | | | | |
| 875 | 72 (22.2) | 35.64 | 18.21 | 1.92 | 33.95 | 17.61 | 2.12 | 32.20 | 16.99 | 2.34 | 30.34 | 16.35 | 2.59 | 28.36 | 15.67 | 2.89 | 26.24 | 14.96 | 3.24 |
| | 67 (19.4) | 32.44 | 22.50 | 1.93 | 30.91 | 21.90 | 2.12 | 29.31 | 21.28 | 2.34 | 27.63 | 20.63 | 2.60 | 25.83 | 19.95 | 2.89 | 23.89 | 19.22 | 3.24 |
| | 63 (17.2)†† | 30.16 | 21.66 | 1.93 | 28.74 | 21.06 | 2.13 | 27.26 | 20.44 | 2.35 | 25.70 | 19.79 | 2.60 | 24.03 | 19.11 | 2.90 | 22.23 | 18.38 | 3.24 |
| | 62 (16.7) | 29.56 | 26.69 | 1.93 | 28.19 | 26.07 | 2.13 | 26.78 | 26.66 | 2.34 | 25.48 | 25.48 | 2.60 | 24.13 | 24.13 | 2.89 | 22.66 | 22.66 | 3.24 |
| | 57 (13.9) | 28.92 | 28.92 | 1.93 | 27.82 | 27.82 | 2.13 | 26.67 | 26.67 | 2.35 | 25.44 | 25.44 | 2.60 | 24.09 | 24.09 | 2.90 | 22.63 | 22.63 | 3.24 |
| 1000 | 72 (22.2) | 36.22 | 19.22 | 1.97 | 34.49 | 18.62 | 2.17 | 32.65 | 17.99 | 2.39 | 30.71 | 17.34 | 2.64 | 28.67 | 16.65 | 2.94 | 26.47 | 15.93 | 3.29 |
| | 67 (19.4) | 33.02 | 24.12 | 1.98 | 31.42 | 23.51 | 2.17 | 29.76 | 22.87 | 2.39 | 28.00 | 22.21 | 2.64 | 26.13 | 21.51 | 2.94 | 24.15 | 20.76 | 3.29 |
| | 63 (17.2)†† | 30.72 | 23.16 | 1.98 | 29.24 | 22.55 | 2.17 | 27.70 | 21.91 | 2.39 | 26.07 | 21.25 | 2.65 | 24.34 | 20.55 | 2.94 | 22.49 | 19.80 | 3.29 |
| | 62 (16.7) | 30.25 | 30.19 | 1.98 | 29.03 | 29.03 | 2.17 | 27.79 | 27.79 | 2.39 | 26.45 | 26.45 | 2.65 | 25.00 | 25.00 | 2.94 | 23.42 | 23.42 | 3.29 |
| | 57 (13.9) | 30.17 | 30.17 | 1.98 | 28.99 | 28.99 | 2.17 | 27.74 | 27.74 | 2.39 | 26.41 | 26.41 | 2.65 | 24.97 | 24.97 | 2.94 | 23.39 | 23.39 | 3.29 |
| 1125 | 72 (22.2) | 36.63 | 20.20 | 2.02 | 34.86 | 19.60 | 2.21 | 32.96 | 18.97 | 2.43 | 30.97 | 18.31 | 2.69 | 28.86 | 17.61 | 2.99 | 26.61 | 16.87 | 3.34 |
| | 67 (19.4) | 33.45 | 25.70 | 2.02 | 31.79 | 25.07 | 2.22 | 30.07 | 24.42 | 2.44 | 28.27 | 23.74 | 2.69 | 26.36 | 23.02 | 2.99 | 24.33 | 22.24 | 3.34 |
| | 63 (17.2)†† | 31.14 | 24.62 | 2.03 | 29.61 | 24.00 | 2.22 | 28.01 | 23.35 | 2.44 | 26.35 | 22.67 | 2.69 | 24.57 | 21.95 | 2.99 | 22.69 | 21.15 | 3.34 |
| | 62 (16.7) | 31.27 | 31.27 | 2.03 | 30.00 | 30.00 | 2.22 | 28.67 | 28.67 | 2.44 | 27.25 | 27.25 | 2.69 | 25.71 | 25.71 | 2.99 | 24.04 | 24.04 | 3.34 |
| | 57 (13.9) | 31.22 | 31.22 | 2.03 | 29.96 | 29.96 | 2.22 | 28.63 | 28.63 | 2.44 | 27.21 | 27.21 | 2.69 | 25.68 | 25.68 | 2.99 | 24.01 | 24.01 | 3.34 |

| EVAPORATOR AIR | | CONDENSER ENTERING AIR TEMPERATURES °F (°C) | | | | | | | | | | | | | | | | | |
|---|---|---|---|---|---|---|---|---|---|---|---|---|---|---|---|---|---|---|---|
| | | 75 (23.9) | | | 85 (29.4) | | | 95 (35) | | | 105 (40.6) | | | 115 (46.1) | | | 125 (51.7) | | |
| CFM | EWB °F (°C) | Capacity MBtuh | | Total Sys. KW** | Capacity MBtuh | | Total Sys. KW** | Capacity MBtuh | | Total Sys. KW** | Capacity MBtuh | | Total Sys. KW** | Capacity MBtuh | | Total Sys. KW** | Capacity MBtuh | | Total Sys. KW** |
| | | Total | Sens‡ | | Total | Sens‡ | | Total | Sens‡ | | Total | Sens‡ | | Total | Sens‡ | | Total | Sens‡ | |
| **CA16NW036–B Outdoor Section With CAP**3721AL* Indoor Section** | | | | | | | | | | | | | | | | | | | |
| 1050 | 72 (22.2) | 41.43 | 22.35 | 2.21 | 39.69 | 21.71 | 2.48 | 37.44 | 20.89 | 2.75 | 34.93 | 19.98 | 3.05 | 32.36 | 19.07 | 3.40 | 29.90 | 18.21 | 3.84 |
| | 67 (19.4) | 38.19 | 27.91 | 2.21 | 36.65 | 27.27 | 2.48 | 34.59 | 26.43 | 2.74 | 32.28 | 25.50 | 3.03 | 29.91 | 24.56 | 3.38 | 27.64 | 23.66 | 3.81 |
| | 63 (17.2)†† | 35.71 | 26.94 | 2.22 | 34.31 | 26.31 | 2.49 | 32.39 | 25.47 | 2.74 | 30.23 | 24.53 | 3.03 | 28.01 | 23.58 | 3.37 | 25.89 | 22.68 | 3.81 |
| | 62 (16.7) | 35.08 | 33.23 | 2.23 | 33.74 | 32.59 | 2.49 | 31.93 | 31.76 | 2.74 | 30.11 | 30.11 | 3.02 | 28.27 | 28.27 | 3.37 | 26.49 | 26.49 | 3.81 |
| | 57 (13.9) | 34.40 | 34.40 | 2.23 | 33.32 | 33.32 | 2.49 | 31.81 | 31.81 | 2.74 | 30.06 | 30.06 | 3.02 | 28.23 | 28.23 | 3.37 | 26.46 | 26.46 | 3.81 |
| 1200 | 72 (22.2) | 41.93 | 23.55 | 2.27 | 40.12 | 22.90 | 2.54 | 37.78 | 22.06 | 2.82 | 35.19 | 21.14 | 3.11 | 32.56 | 20.22 | 3.46 | 30.03 | 19.35 | 3.90 |
| | 67 (19.4) | 38.75 | 29.85 | 2.27 | 37.13 | 29.20 | 2.54 | 35.00 | 28.35 | 2.80 | 32.61 | 27.40 | 3.09 | 30.17 | 26.44 | 3.44 | 27.86 | 25.52 | 3.88 |
| | 63 (17.2)†† | 36.30 | 28.76 | 2.28 | 34.82 | 28.12 | 2.54 | 32.84 | 27.26 | 2.80 | 30.60 | 26.30 | 3.08 | 28.31 | 25.33 | 3.43 | 26.14 | 24.40 | 3.87 |
| | 62 (16.7) | 35.86 | 35.86 | 2.28 | 34.66 | 34.66 | 2.54 | 33.01 | 33.01 | 2.80 | 31.13 | 31.13 | 3.08 | 29.17 | 29.17 | 3.43 | 27.26 | 27.26 | 3.87 |
| | 57 (13.9) | 35.80 | 35.80 | 2.28 | 34.61 | 34.61 | 2.54 | 32.97 | 32.97 | 2.80 | 31.10 | 31.10 | 3.08 | 29.13 | 29.13 | 3.43 | 27.23 | 27.23 | 3.87 |
| 1350 | 72 (22.2) | 42.26 | 24.70 | 2.32 | 40.39 | 24.03 | 2.60 | 37.99 | 23.19 | 2.88 | 35.35 | 22.27 | 3.17 | 32.65 | 21.34 | 3.53 | 30.07 | 20.46 | 3.97 |
| | 67 (19.4) | 39.14 | 31.75 | 2.32 | 37.47 | 31.08 | 2.59 | 35.28 | 30.21 | 2.86 | 32.84 | 29.24 | 3.15 | 30.36 | 28.25 | 3.50 | 28.02 | 27.25 | 3.94 |
| | 63 (17.2)†† | 36.73 | 30.53 | 2.33 | 35.20 | 29.87 | 2.60 | 33.15 | 28.99 | 2.86 | 30.87 | 28.01 | 3.14 | 28.54 | 27.00 | 3.49 | 26.35 | 25.97 | 3.93 |
| | 62 (16.7) | 36.98 | 36.98 | 2.33 | 35.69 | 35.69 | 2.59 | 33.93 | 33.93 | 2.85 | 31.94 | 31.94 | 3.14 | 29.86 | 29.86 | 3.49 | 27.84 | 27.84 | 3.93 |
| | 57 (13.9) | 36.94 | 36.94 | 2.33 | 35.64 | 35.64 | 2.59 | 33.89 | 33.89 | 2.85 | 31.90 | 31.90 | 3.14 | 29.83 | 29.83 | 3.49 | 27.82 | 27.82 | 3.93 |

See notes on page 16

# DETAILED COOLING CAPACITIES# CONTINUED

| EVAPORATOR AIR | | CONDENSER ENTERING AIR TEMPERATURES °F (°C) | | | | | | | | | | | | | | | | | |
|---|---|---|---|---|---|---|---|---|---|---|---|---|---|---|---|---|---|---|---|
| | | 75 (23.9) | | | 85 (29.4) | | | 95 (35) | | | 105 (40.6) | | | 115 (46.1) | | | 125 (51.7) | | |
| CFM | EWB °F (°C) | Capacity MBtuh | | Total Sys. KW** | Capacity MBtuh | | Total Sys. KW** | Capacity MBtuh | | Total Sys. KW** | Capacity MBtuh | | Total Sys. KW** | Capacity MBtuh | | Total Sys. KW** | Capacity MBtuh | | Total Sys. KW** |
| | | Total | Sens‡ | | Total | Sens‡ | | Total | Sens‡ | | Total | Sens‡ | | Total | Sens‡ | | Total | Sens‡ | |
| **CA16NW042–B Outdoor Section With CAP**4321AL* Indoor Section** | | | | | | | | | | | | | | | | | | | |
| 1225 | 72 (22.2) | 48.22 | 24.66 | 2.66 | 46.04 | 23.88 | 2.91 | 43.76 | 23.07 | 3.20 | 41.35 | 22.23 | 3.54 | 38.73 | 21.33 | 3.94 | 35.86 | 20.35 | 4.40 |
| | 67 (19.4) | 43.94 | 30.44 | 2.65 | 41.96 | 29.66 | 2.90 | 39.92 | 28.86 | 3.19 | 37.74 | 28.02 | 3.53 | 35.35 | 27.10 | 3.93 | 32.73 | 26.11 | 4.39 |
| | 63 (17.2)†† | 40.85 | 29.30 | 2.63 | 39.03 | 28.53 | 2.89 | 37.15 | 27.73 | 3.18 | 35.13 | 26.89 | 3.52 | 32.94 | 25.99 | 3.92 | 30.49 | 24.98 | 4.38 |
| | 62 (16.7) | 40.14 | 36.10 | 2.63 | 38.38 | 35.29 | 2.89 | 36.59 | 34.43 | 3.18 | 34.82 | 34.82 | 3.52 | 33.04 | 33.04 | 3.92 | 31.02 | 31.02 | 4.38 |
| | 57 (13.9) | 39.26 | 39.26 | 2.63 | 37.85 | 37.85 | 2.88 | 36.37 | 36.37 | 3.18 | 34.77 | 34.77 | 3.52 | 33.00 | 33.00 | 3.92 | 30.98 | 30.98 | 4.38 |
| 1400 | 72 (22.2) | 49.02 | 25.99 | 2.73 | 46.72 | 25.19 | 2.98 | 44.36 | 24.37 | 3.27 | 41.84 | 23.51 | 3.61 | 39.12 | 22.59 | 4.01 | 36.16 | 21.61 | 4.47 |
| | 67 (19.4) | 44.72 | 32.58 | 2.71 | 42.63 | 31.77 | 2.97 | 40.50 | 30.95 | 3.26 | 38.24 | 30.09 | 3.60 | 35.77 | 29.16 | 4.00 | 33.07 | 28.13 | 4.46 |
| | 63 (17.2)†† | 41.61 | 31.28 | 2.70 | 39.69 | 30.49 | 2.96 | 37.73 | 29.67 | 3.25 | 35.64 | 28.82 | 3.59 | 33.36 | 27.88 | 3.99 | 30.85 | 26.85 | 4.45 |
| | 62 (16.7) | 41.11 | 40.80 | 2.70 | 39.47 | 39.47 | 2.96 | 37.87 | 37.87 | 3.25 | 36.14 | 36.14 | 3.59 | 34.21 | 34.21 | 3.99 | 32.06 | 32.06 | 4.45 |
| | 57 (13.9) | 40.95 | 40.95 | 2.70 | 39.41 | 39.41 | 2.96 | 37.81 | 37.81 | 3.25 | 36.09 | 36.09 | 3.59 | 34.17 | 34.17 | 3.99 | 32.01 | 32.01 | 4.45 |
| 1575 | 72 (22.2) | 49.58 | 27.26 | 2.80 | 47.21 | 26.45 | 3.05 | 44.76 | 25.62 | 3.34 | 42.16 | 24.75 | 3.68 | 39.37 | 23.82 | 4.07 | 36.34 | 22.83 | 4.53 |
| | 67 (19.4) | 45.27 | 34.62 | 2.78 | 43.12 | 33.81 | 3.04 | 40.93 | 32.97 | 3.33 | 38.60 | 32.08 | 3.67 | 36.07 | 31.12 | 4.06 | 33.33 | 30.05 | 4.52 |
| | 63 (17.2)†† | 42.15 | 33.18 | 2.77 | 40.18 | 32.37 | 3.03 | 38.15 | 31.54 | 3.32 | 36.00 | 30.65 | 3.66 | 33.67 | 29.69 | 4.05 | 31.12 | 28.59 | 4.52 |
| | 62 (16.7) | 42.36 | 42.36 | 2.77 | 40.71 | 40.71 | 3.03 | 39.01 | 39.01 | 3.32 | 37.16 | 37.16 | 3.66 | 35.12 | 35.12 | 4.06 | 32.84 | 32.84 | 4.52 |
| | 57 (13.9) | 42.30 | 42.30 | 2.77 | 40.66 | 40.66 | 3.03 | 38.95 | 38.95 | 3.32 | 37.12 | 37.12 | 3.66 | 35.08 | 35.08 | 4.06 | 32.80 | 32.80 | 4.52 |

| EVAPORATOR AIR | | CONDENSER ENTERING AIR TEMPERATURES °F (°C) | | | | | | | | | | | | | | | | | |
|---|---|---|---|---|---|---|---|---|---|---|---|---|---|---|---|---|---|---|---|
| | | 75 (23.9) | | | 85 (29.4) | | | 95 (35) | | | 105 (40.6) | | | 115 (46.1) | | | 125 (51.7) | | |
| CFM | EWB °F (°C) | Capacity MBtuh | | Total Sys. KW** | Capacity MBtuh | | Total Sys. KW** | Capacity MBtuh | | Total Sys. KW** | Capacity MBtuh | | Total Sys. KW** | Capacity MBtuh | | Total Sys. KW** | Capacity MBtuh | | Total Sys. KW** |
| | | Total | Sens‡ | | Total | Sens‡ | | Total | Sens‡ | | Total | Sens‡ | | Total | Sens‡ | | Total | Sens‡ | |
| **CA16NW043–B Outdoor Section With CAP**4321AL* Indoor Section** | | | | | | | | | | | | | | | | | | | |
| 1225 | 72 (22.2) | 48.56 | 25.46 | 2.69 | 46.32 | 24.64 | 2.96 | 43.94 | 23.77 | 3.27 | 41.41 | 22.87 | 3.62 | 38.69 | 21.91 | 4.01 | 35.81 | 20.91 | 4.44 |
| | 67 (19.4) | 44.05 | 31.34 | 2.68 | 42.05 | 30.53 | 2.96 | 39.91 | 29.67 | 3.26 | 37.65 | 28.77 | 3.61 | 35.20 | 27.81 | 4.00 | 32.59 | 26.79 | 4.43 |
| | 63 (17.2)†† | 40.83 | 30.10 | 2.68 | 38.99 | 29.30 | 2.95 | 37.02 | 28.45 | 3.26 | 34.93 | 27.56 | 3.60 | 32.69 | 26.61 | 3.99 | 30.28 | 25.60 | 4.42 |
| | 62 (16.7) | 40.17 | 37.10 | 2.68 | 38.40 | 36.26 | 2.95 | 36.55 | 35.32 | 3.26 | 34.91 | 33.61 | 3.60 | 32.91 | 32.91 | 3.99 | 30.91 | 30.91 | 4.42 |
| | 57 (13.9) | 39.31 | 39.31 | 2.67 | 37.88 | 37.88 | 2.95 | 36.35 | 36.35 | 3.25 | 34.68 | 34.68 | 3.60 | 32.86 | 32.86 | 3.99 | 30.87 | 30.87 | 4.42 |
| 1400 | 72 (22.2) | 49.39 | 26.84 | 2.76 | 47.05 | 26.01 | 3.04 | 44.56 | 25.13 | 3.35 | 41.92 | 24.20 | 3.69 | 39.11 | 23.23 | 4.08 | 36.12 | 22.21 | 4.51 |
| | 67 (19.4) | 44.87 | 33.55 | 2.75 | 42.76 | 32.72 | 3.03 | 40.54 | 31.84 | 3.34 | 38.18 | 30.92 | 3.68 | 35.65 | 29.93 | 4.07 | 32.97 | 28.89 | 4.50 |
| | 63 (17.2)†† | 41.60 | 32.16 | 2.75 | 39.67 | 31.33 | 3.02 | 37.63 | 30.47 | 3.33 | 35.45 | 29.55 | 3.67 | 33.13 | 28.57 | 4.06 | 30.65 | 27.52 | 4.49 |
| | 62 (16.7) | 41.21 | 40.88 | 2.75 | 39.55 | 39.55 | 3.02 | 37.88 | 37.88 | 3.33 | 36.08 | 36.08 | 3.68 | 34.11 | 34.11 | 4.06 | 31.97 | 31.97 | 4.50 |
| | 57 (13.9) | 41.04 | 41.04 | 2.75 | 39.49 | 39.49 | 3.02 | 37.83 | 37.83 | 3.33 | 36.03 | 36.03 | 3.68 | 34.06 | 34.06 | 4.06 | 31.93 | 31.93 | 4.50 |
| 1575 | 72 (22.2) | 49.99 | 28.17 | 2.83 | 47.56 | 27.32 | 3.11 | 44.99 | 26.43 | 3.42 | 42.27 | 25.49 | 3.76 | 39.37 | 24.51 | 4.15 | 36.31 | 23.48 | 4.58 |
| | 67 (19.4) | 45.46 | 35.68 | 2.82 | 43.29 | 34.83 | 3.10 | 40.99 | 33.92 | 3.41 | 38.57 | 32.98 | 3.75 | 35.98 | 31.96 | 4.14 | 33.24 | 30.85 | 4.57 |
| | 63 (17.2)†† | 42.18 | 34.13 | 2.82 | 40.19 | 33.28 | 3.09 | 38.07 | 32.39 | 3.40 | 35.84 | 31.44 | 3.74 | 33.46 | 30.42 | 4.13 | 30.94 | 29.30 | 4.56 |
| | 62 (16.7) | 42.50 | 42.50 | 2.82 | 40.83 | 40.83 | 3.09 | 39.05 | 39.05 | 3.40 | 37.14 | 37.14 | 3.75 | 35.04 | 35.04 | 4.14 | 32.78 | 32.78 | 4.57 |
| | 57 (13.9) | 42.43 | 42.43 | 2.82 | 40.77 | 40.77 | 3.09 | 39.00 | 39.00 | 3.40 | 37.09 | 37.09 | 3.75 | 35.00 | 35.00 | 4.14 | 32.75 | 32.75 | 4.57 |

See notes on page 16

# DETAILED COOLING CAPACITIES# CONTINUED

| EVAPORATOR AIR | | CONDENSER ENTERING AIR TEMPERATURES °F (°C) | | | | | | | | | | | | | | | | | |
|---|---|---|---|---|---|---|---|---|---|---|---|---|---|---|---|---|---|---|---|
| | | 75 (23.9) | | | 85 (29.4) | | | 95 (35) | | | 105 (40.6) | | | 115 (46.1) | | | 125 (51.7) | | |
| CFM | EWB °F (°C) | Capacity MBtuh | | Total Sys. KW** | Capacity MBtuh | | Total Sys. KW** | Capacity MBtuh | | Total Sys. KW** | Capacity MBtuh | | Total Sys. KW** | Capacity MBtuh | | Total Sys. KW** | Capacity MBtuh | | Total Sys. KW** |
| | | Total | Sens‡ | | Total | Sens‡ | | Total | Sens‡ | | Total | Sens‡ | | Total | Sens‡ | | Total | Sens‡ | |
| CA16NW048–B Outdoor Section With CAP**6024** Indoor Section | | | | | | | | | | | | | | | | | | | |
| 1400 | 72 (22.2) | 44.96 | 44.96 | 2.96 | 43.24 | 43.24 | 3.31 | 41.42 | 41.42 | 3.68 | 39.48 | 39.48 | 4.07 | 37.41 | 37.41 | 4.50 | 35.13 | 35.13 | 4.97 |
| | 67 (19.4) | 45.83 | 40.58 | 2.94 | 43.71 | 39.59 | 3.30 | 41.58 | 41.20 | 3.68 | 39.55 | 39.55 | 4.07 | 37.46 | 37.46 | 4.50 | 35.17 | 35.17 | 4.97 |
| | 63 (17.2)†† | 46.51 | 32.87 | 2.92 | 44.27 | 31.94 | 3.30 | 41.97 | 30.99 | 3.67 | 39.55 | 30.00 | 4.07 | 37.01 | 28.97 | 4.50 | 34.29 | 27.86 | 4.97 |
| | 62 (16.7) | 50.34 | 34.29 | 2.82 | 47.86 | 33.33 | 3.22 | 45.32 | 32.35 | 3.62 | 42.67 | 31.35 | 4.04 | 39.88 | 30.30 | 4.49 | 36.92 | 29.19 | 4.97 |
| | 57 (13.9) | 55.58 | 27.87 | 2.66 | 52.81 | 26.89 | 3.10 | 49.96 | 25.90 | 3.53 | 46.99 | 24.88 | 3.98 | 43.89 | 23.82 | 4.45 | 40.59 | 22.72 | 4.95 |
| 1600 | 72 (22.2) | 46.87 | 46.87 | 2.98 | 44.99 | 44.99 | 3.35 | 43.03 | 43.03 | 3.73 | 40.92 | 40.92 | 4.13 | 38.67 | 38.67 | 4.57 | 36.23 | 36.23 | 5.05 |
| | 67 (19.4) | 47.04 | 46.57 | 2.98 | 45.07 | 45.07 | 3.35 | 43.08 | 43.08 | 3.73 | 40.97 | 40.97 | 4.13 | 38.72 | 38.72 | 4.57 | 36.27 | 36.27 | 5.05 |
| | 63 (17.2)†† | 47.41 | 35.02 | 2.97 | 45.06 | 34.06 | 3.35 | 42.65 | 33.08 | 3.74 | 40.14 | 32.06 | 4.14 | 37.49 | 30.98 | 4.57 | 34.68 | 29.83 | 5.05 |
| | 62 (16.7) | 51.23 | 36.58 | 2.86 | 48.66 | 35.60 | 3.27 | 46.00 | 34.60 | 3.68 | 43.25 | 33.56 | 4.11 | 40.37 | 32.48 | 4.56 | 37.31 | 31.33 | 5.04 |
| | 57 (13.9) | 56.55 | 29.30 | 2.70 | 53.65 | 28.30 | 3.14 | 50.66 | 27.28 | 3.59 | 47.58 | 26.24 | 4.04 | 44.35 | 25.17 | 4.52 | 40.94 | 24.04 | 5.03 |
| 1800 | 72 (22.2) | 48.44 | 48.44 | 3.01 | 46.42 | 46.42 | 3.39 | 44.30 | 44.30 | 3.78 | 42.07 | 42.07 | 4.19 | 39.68 | 39.68 | 4.63 | 37.09 | 37.09 | 5.12 |
| | 67 (19.4) | 48.50 | 48.50 | 3.01 | 46.48 | 46.48 | 3.39 | 44.35 | 44.35 | 3.78 | 42.11 | 42.11 | 4.19 | 39.72 | 39.72 | 4.63 | 37.13 | 37.13 | 5.12 |
| | 63 (17.2)†† | 48.09 | 37.06 | 3.02 | 45.64 | 36.07 | 3.41 | 43.15 | 35.05 | 3.80 | 40.56 | 33.99 | 4.21 | 37.85 | 32.87 | 4.65 | 35.01 | 31.63 | 5.12 |
| | 62 (16.7) | 51.92 | 38.78 | 2.91 | 49.24 | 37.77 | 3.32 | 46.51 | 36.74 | 3.74 | 43.67 | 35.67 | 4.17 | 40.72 | 34.54 | 4.63 | 37.63 | 33.32 | 5.12 |
| | 57 (13.9) | 57.26 | 30.65 | 2.74 | 54.24 | 29.63 | 3.19 | 51.16 | 28.60 | 3.64 | 47.97 | 27.53 | 4.11 | 44.65 | 26.44 | 4.59 | 41.16 | 25.30 | 5.10 |

| EVAPORATOR AIR | | CONDENSER ENTERING AIR TEMPERATURES °F (°C) | | | | | | | | | | | | | | | | | |
|---|---|---|---|---|---|---|---|---|---|---|---|---|---|---|---|---|---|---|---|
| | | 75 (23.9) | | | 85 (29.4) | | | 95 (35) | | | 105 (40.6) | | | 115 (46.1) | | | 125 (51.7) | | |
| CFM | EWB °F (°C) | Capacity MBtuh | | Total Sys. KW** | Capacity MBtuh | | Total Sys. KW** | Capacity MBtuh | | Total Sys. KW** | Capacity MBtuh | | Total Sys. KW** | Capacity MBtuh | | Total Sys. KW** | Capacity MBtuh | | Total Sys. KW** |
| | | Total | Sens‡ | | Total | Sens‡ | | Total | Sens‡ | | Total | Sens‡ | | Total | Sens‡ | | Total | Sens‡ | |
| CA16NW054–B Outdoor Section With CNPV*6124AL* Indoor Section | | | | | | | | | | | | | | | | | | | |
| 1500 | 72 (22.2) | 64.87 | 31.01 | 3.45 | 61.81 | 29.96 | 3.83 | 58.56 | 28.85 | 4.23 | 55.09 | 27.69 | 4.67 | 51.39 | 26.47 | 5.17 | 47.42 | 25.18 | 5.74 |
| | 67 (19.4) | 58.98 | 37.97 | 3.44 | 56.24 | 36.93 | 3.81 | 53.34 | 35.84 | 4.20 | 50.21 | 34.68 | 4.64 | 46.86 | 33.45 | 5.14 | 43.27 | 32.15 | 5.71 |
| | 63 (17.2)†† | 54.70 | 36.53 | 3.43 | 52.19 | 35.50 | 3.79 | 49.54 | 34.43 | 4.18 | 46.64 | 33.28 | 4.62 | 43.54 | 32.05 | 5.12 | 40.22 | 30.75 | 5.69 |
| | 62 (16.7) | 53.93 | 44.86 | 3.43 | 51.54 | 43.82 | 3.79 | 48.98 | 42.69 | 4.18 | 46.27 | 45.81 | 4.62 | 43.66 | 43.66 | 5.12 | 40.91 | 40.91 | 5.69 |
| | 57 (13.9) | 52.46 | 52.46 | 3.43 | 50.51 | 50.51 | 3.78 | 48.41 | 48.41 | 4.17 | 46.11 | 46.11 | 4.62 | 43.59 | 43.59 | 5.12 | 40.85 | 40.85 | 5.69 |
| 1750 | 72 (22.2) | 66.19 | 32.86 | 3.55 | 62.95 | 31.78 | 3.92 | 59.53 | 30.64 | 4.33 | 55.90 | 29.46 | 4.78 | 52.04 | 28.22 | 5.28 | 47.92 | 26.91 | 5.84 |
| | 67 (19.4) | 60.26 | 40.93 | 3.54 | 57.37 | 39.87 | 3.90 | 54.30 | 38.74 | 4.30 | 51.04 | 37.55 | 4.74 | 47.55 | 36.29 | 5.24 | 43.84 | 34.95 | 5.81 |
| | 63 (17.2)†† | 55.94 | 39.29 | 3.53 | 53.29 | 38.23 | 3.89 | 50.48 | 37.12 | 4.28 | 47.47 | 35.94 | 4.72 | 44.24 | 34.66 | 5.22 | 40.80 | 33.33 | 5.79 |
| | 62 (16.7) | 55.46 | 48.79 | 3.53 | 53.03 | 52.61 | 3.89 | 50.90 | 45.33 | 4.28 | 48.14 | 48.14 | 4.72 | 45.41 | 45.41 | 5.23 | 42.44 | 42.44 | 5.80 |
| | 57 (13.9) | 55.01 | 55.01 | 3.53 | 52.88 | 52.88 | 3.89 | 50.59 | 50.59 | 4.28 | 48.08 | 48.08 | 4.72 | 45.35 | 45.35 | 5.23 | 42.38 | 42.38 | 5.80 |
| 2000 | 72 (22.2) | 67.09 | 34.59 | 3.64 | 63.73 | 33.49 | 4.02 | 60.18 | 32.35 | 4.43 | 56.42 | 31.14 | 4.87 | 52.44 | 29.88 | 5.37 | 48.20 | 28.55 | 5.94 |
| | 67 (19.4) | 61.18 | 43.75 | 3.63 | 58.17 | 42.65 | 4.00 | 55.00 | 41.50 | 4.40 | 51.62 | 40.27 | 4.84 | 48.05 | 38.97 | 5.34 | 44.26 | 37.55 | 5.91 |
| | 63 (17.2)†† | 56.84 | 41.90 | 3.62 | 54.08 | 40.82 | 3.98 | 51.18 | 39.68 | 4.38 | 48.05 | 38.45 | 4.82 | 44.75 | 37.14 | 5.32 | 41.25 | 35.70 | 5.89 |
| | 62 (16.7) | 57.42 | 51.13 | 3.62 | 54.86 | 54.86 | 3.99 | 52.39 | 52.39 | 4.39 | 49.69 | 49.69 | 4.83 | 46.78 | 46.78 | 5.33 | 43.61 | 43.61 | 5.90 |
| | 57 (13.9) | 57.08 | 57.08 | 3.62 | 54.79 | 54.79 | 3.99 | 52.32 | 52.32 | 4.39 | 49.63 | 49.63 | 4.83 | 46.73 | 46.73 | 5.33 | 43.57 | 43.57 | 5.90 |

See notes on page 16

# DETAILED COOLING CAPACITIES# CONTINUED

| EVAPORATOR AIR | | CONDENSER ENTERING AIR TEMPERATURES °F (°C) | | | | | | | | | | | | | | | | | |
|---|---|---|---|---|---|---|---|---|---|---|---|---|---|---|---|---|---|---|---|
| | | 75 (23.9) | | | 85 (29.4) | | | 95 (35) | | | 105 (40.6) | | | 115 (46.1) | | | 125 (51.7) | | |
| CFM | EWB °F (°C) | Capacity Mbtuh | | Total Sys. KW** | Capacity MBtuh | | Total Sys. KW** | Capacity MBtuh | | Total Sys. KW** | Capacity MBtuh | | Total Sys. KW** | Capacity MBtuh | | Total Sys. KW** | Capacity MBtuh | | Total Sys. KW** |
| | | Total | Sens‡ | | Total | Sens‡ | | Total | Sens‡ | | Total | Sens‡ | | Total | Sens‡ | | Total | Sens‡ | |
| CA16NW061–B Outdoor Section With CNPV*6124AL* Indoor Section | | | | | | | | | | | | | | | | | | | |
| 1500 | 72 (22.2) | 68.30 | 33.55 | 3.65 | 65.09 | 32.34 | 4.03 | 61.73 | 31.13 | 4.45 | 58.17 | 29.87 | 4.93 | 54.32 | 28.53 | 5.47 | 50.24 | 27.13 | 6.07 |
| | 67 (19.4) | 62.29 | 40.83 | 3.63 | 59.44 | 39.67 | 4.00 | 56.43 | 38.48 | 4.43 | 53.20 | 37.22 | 4.91 | 49.71 | 35.87 | 5.44 | 46.04 | 34.47 | 6.05 |
| | 63 (17.2)†† | 57.89 | 39.38 | 3.61 | 55.33 | 38.26 | 3.99 | 52.55 | 37.08 | 4.41 | 49.46 | 35.76 | 4.88 | 46.37 | 34.49 | 5.43 | 42.94 | 33.08 | 6.03 |
| | 62 (16.7) | 57.02 | 48.07 | 3.61 | 54.51 | 46.93 | 3.98 | 51.84 | 45.72 | 4.41 | 48.85 | 44.36 | 4.88 | 45.99 | 45.61 | 5.42 | 43.10 | 43.10 | 6.04 |
| | 57 (13.9) | 54.94 | 54.94 | 3.60 | 52.94 | 52.94 | 3.98 | 50.79 | 50.79 | 4.40 | 48.36 | 48.36 | 4.88 | 45.87 | 45.87 | 5.42 | 43.06 | 43.06 | 6.04 |
| 1750 | 72 (22.2) | 68.08 | 34.84 | 3.74 | 66.38 | 34.24 | 4.13 | 62.80 | 32.99 | 4.55 | 59.06 | 31.70 | 5.03 | 55.02 | 30.33 | 5.57 | 50.81 | 28.92 | 6.17 |
| | 67 (19.4) | 63.70 | 43.91 | 3.73 | 60.67 | 42.72 | 4.10 | 57.50 | 41.50 | 4.53 | 54.09 | 40.20 | 5.01 | 50.47 | 38.82 | 5.55 | 46.61 | 37.36 | 6.15 |
| | 63 (17.2)†† | 59.27 | 42.26 | 3.71 | 56.53 | 41.11 | 4.09 | 53.61 | 39.89 | 4.51 | 50.48 | 38.60 | 4.99 | 47.11 | 37.22 | 5.53 | 43.56 | 35.77 | 6.13 |
| | 62 (16.7) | 58.59 | 52.25 | 3.71 | 55.96 | 51.03 | 4.09 | 53.26 | 52.75 | 4.51 | 50.61 | 50.61 | 4.99 | 47.77 | 47.77 | 5.53 | 44.74 | 44.74 | 6.14 |
| | 57 (13.9) | 57.65 | 57.65 | 3.71 | 55.46 | 55.46 | 4.08 | 53.11 | 53.11 | 4.51 | 50.53 | 50.53 | 4.99 | 47.73 | 47.73 | 5.53 | 44.69 | 44.69 | 6.14 |
| 2000 | 72 (22.2) | 70.67 | 37.22 | 3.85 | 67.19 | 36.00 | 4.22 | 63.52 | 34.75 | 4.65 | 59.62 | 33.43 | 5.13 | 55.45 | 32.04 | 5.66 | 51.14 | 30.62 | 6.27 |
| | 67 (19.4) | 64.66 | 46.91 | 3.83 | 61.54 | 45.62 | 4.20 | 58.23 | 44.37 | 4.63 | 54.73 | 43.04 | 5.10 | 50.98 | 41.61 | 5.64 | 47.07 | 40.13 | 6.25 |
| | 63 (17.2)†† | 60.27 | 45.00 | 3.81 | 57.39 | 43.79 | 4.19 | 54.36 | 42.55 | 4.61 | 51.12 | 41.23 | 5.09 | 47.65 | 39.80 | 5.63 | 44.01 | 38.31 | 6.23 |
| | 62 (16.7) | 60.03 | 59.46 | 3.81 | 57.55 | 57.55 | 4.19 | 55.01 | 55.01 | 4.61 | 52.25 | 52.25 | 5.09 | 49.23 | 49.23 | 5.64 | 46.01 | 46.01 | 6.25 |
| | 57 (13.9) | 59.85 | 59.85 | 3.81 | 57.47 | 57.47 | 4.19 | 54.94 | 54.94 | 4.61 | 52.18 | 52.18 | 5.09 | 49.18 | 49.18 | 5.63 | 45.94 | 45.94 | 6.24 |

† Total and sensible capacities are net capacities. Blower motor heat has been subtracted.
‡ Sensible capacities shown are based on 80°F (27°C) entering air at the indoor coil. For sensible capacities at other than 80°F (27°C), deduct 835 Btuh (245 kW) per 1000 CFM (480 L/S) of indoor coil air for each degree below 80°F (27°C), or add 835 Btuh (245 kW) per 1000 CFM (480 L/S) of indoor coil air per degree above 80°F (27°C).
# Detailed cooling capacities are based on indoor and outdoor unit at the same elevation per AHRI standard 210/240–2008. If additional tubing length and/or indoor unit is located above outdoor unit, a slight variation in capacity may occur.
** System kw is total of indoor and outdoor unit kilowatts.
†† At TVA rating indoor condition (75°F edb/63°F ewb). All other indoor air temperatures are at 80°F edb.
**NOTE**: When the required data falls between the published data, interpolation may be performed. Extrapolation is not an acceptable practice.
**EWB** — Entering Wet Bulb

# CONDENSER ONLY RATINGS

| SST °F (°C) | | CONDENSER ENTERING AIR TEMPERATURES °F (°C) | | | | | | | |
|---|---|---|---|---|---|---|---|---|---|
| | | 55 (12.78) | 65 (18.33) | 75 (23.89) | 85 (29.44) | 95 (35.0) | 105 (40.56) | 115 (46.11) | 125 (51.67) |
| **CA16NW018–A** | | | | | | | | | |
| 30 (–1.11) | TCG | 16.10 | 14.90 | 13.90 | 12.90 | 11.90 | 11.00 | 9.90 | 8.80 |
| | SDT | 67.70 | 77.00 | 86.40 | 95.80 | 105.30 | 114.80 | 124.20 | 133.50 |
| | KW | 0.74 | 0.85 | 0.96 | 1.08 | 1.22 | 1.37 | 1.55 | 1.75 |
| 35 (1.67) | TCG | 17.60 | 16.50 | 15.40 | 14.30 | 13.30 | 12.30 | 11.10 | 10.00 |
| | SDT | 68.80 | 78.10 | 87.40 | 96.90 | 106.30 | 115.60 | 125.00 | 134.30 |
| | KW | 0.74 | 0.84 | 0.96 | 1.08 | 1.22 | 1.38 | 1.55 | 1.76 |
| 40 (4.44) | TCG | 19.30 | 18.10 | 17.00 | 15.90 | 14.80 | 13.60 | 12.40 | 11.20 |
| | SDT | 69.90 | 79.20 | 88.50 | 97.90 | 107.20 | 116.50 | 125.80 | 135.10 |
| | KW | 0.73 | 0.84 | 0.95 | 1.08 | 1.22 | 1.38 | 1.56 | 1.76 |
| 45 (7.22) | TCG | 21.10 | 19.80 | 18.60 | 17.50 | 16.30 | 15.10 | 13.80 | 12.40 |
| | SDT | 71.10 | 80.40 | 89.60 | 98.90 | 108.20 | 117.50 | 126.70 | 135.90 |
| | KW | 0.72 | 0.83 | 0.95 | 1.08 | 1.22 | 1.38 | 1.56 | 1.77 |
| 50 (10.0) | TCG | 22.90 | 21.60 | 20.40 | 19.20 | 17.90 | 16.60 | 15.20 | 13.80 |
| | SDT | 72.30 | 81.50 | 90.70 | 100.00 | 109.30 | 118.50 | 127.70 | 136.80 |
| | KW | 0.71 | 0.82 | 0.94 | 1.07 | 1.22 | 1.38 | 1.56 | 1.77 |
| 55 (12.78) | TCG | 24.90 | 23.50 | 22.20 | 20.90 | 19.60 | 18.20 | 16.70 | 15.20 |
| | SDT | 73.50 | 82.70 | 91.90 | 101.20 | 110.40 | 119.60 | 128.70 | 137.80 |
| | KW | 0.70 | 0.81 | 0.93 | 1.07 | 1.21 | 1.38 | 1.56 | 1.77 |
| **CA16NW024–A** | | | | | | | | | |
| 30 (–1.11) | TCG | 21.20 | 20.00 | 18.80 | 17.70 | 16.50 | 15.40 | 14.20 | 12.90 |
| | SDT | 67.60 | 77.10 | 86.60 | 96.10 | 105.60 | 115.20 | 124.60 | 134.00 |
| | KW | 1.02 | 1.17 | 1.32 | 1.48 | 1.67 | 1.87 | 2.11 | 2.39 |
| 35 (1.67) | TCG | 23.30 | 22.00 | 20.80 | 19.50 | 18.30 | 17.00 | 15.70 | 14.30 |
| | SDT | 68.70 | 78.20 | 87.60 | 97.10 | 106.60 | 116.00 | 125.40 | 134.80 |
| | KW | 1.03 | 1.17 | 1.32 | 1.48 | 1.67 | 1.88 | 2.12 | 2.39 |
| 40 (4.44) | TCG | 25.60 | 24.20 | 22.80 | 21.50 | 20.10 | 18.80 | 17.30 | 15.80 |
| | SDT | 69.90 | 79.30 | 88.80 | 98.20 | 107.50 | 116.80 | 126.20 | 135.50 |
| | KW | 1.03 | 1.17 | 1.32 | 1.49 | 1.67 | 1.87 | 2.12 | 2.39 |
| 45 (7.22) | TCG | 28.10 | 26.60 | 25.10 | 23.60 | 22.20 | 20.60 | 19.10 | 17.40 |
| | SDT | 71.20 | 80.60 | 89.90 | 99.20 | 108.50 | 117.80 | 127.00 | 136.30 |
| | KW | 1.03 | 1.17 | 1.32 | 1.48 | 1.67 | 1.87 | 2.11 | 2.39 |
| 50 (10.0) | TCG | 30.70 | 29.10 | 27.50 | 25.90 | 24.30 | 22.60 | 20.90 | 19.10 |
| | SDT | 72.60 | 81.80 | 91.00 | 100.30 | 109.50 | 118.80 | 128.00 | 137.20 |
| | KW | 1.03 | 1.17 | 1.32 | 1.48 | 1.66 | 1.87 | 2.11 | 2.39 |
| 55 (12.78) | TCG | 33.50 | 31.80 | 30.10 | 28.30 | 26.50 | 24.70 | 22.80 | 20.90 |
| | SDT | 73.90 | 83.10 | 92.30 | 101.50 | 110.60 | 119.80 | 129.00 | 138.10 |
| | KW | 1.03 | 1.17 | 1.32 | 1.48 | 1.66 | 1.87 | 2.11 | 2.39 |
| **CA16NW030–A** | | | | | | | | | |
| 30 (–1.11) | TCG | 25.60 | 24.30 | 22.90 | 21.60 | 20.10 | 18.70 | 17.10 | 15.50 |
| | SDT | 67.20 | 76.70 | 86.20 | 95.70 | 105.20 | 114.60 | 124.00 | 133.40 |
| | KW | 1.24 | 1.42 | 1.60 | 1.79 | 2.01 | 2.25 | 2.54 | 2.87 |
| 35 (1.67) | TCG | 28.20 | 26.70 | 25.20 | 23.70 | 22.20 | 20.60 | 18.90 | 17.10 |
| | SDT | 68.40 | 77.80 | 87.20 | 96.70 | 106.10 | 115.50 | 124.80 | 134.10 |
| | KW | 1.25 | 1.43 | 1.61 | 1.80 | 2.01 | 2.26 | 2.55 | 2.88 |
| 40 (4.44) | TCG | 31.00 | 29.40 | 27.70 | 26.10 | 24.40 | 22.60 | 20.80 | 18.80 |
| | SDT | 69.60 | 79.00 | 88.40 | 97.70 | 107.00 | 116.30 | 125.60 | 134.80 |
| | KW | 1.26 | 1.43 | 1.61 | 1.80 | 2.02 | 2.27 | 2.55 | 2.89 |
| 45 (7.22) | TCG | 34.00 | 32.20 | 30.40 | 28.60 | 26.70 | 24.80 | 22.80 | 20.70 |
| | SDT | 70.90 | 80.20 | 89.50 | 98.80 | 108.00 | 117.20 | 126.40 | 135.60 |
| | KW | 1.27 | 1.44 | 1.61 | 1.81 | 2.02 | 2.27 | 2.56 | 2.89 |
| 50 (10.0) | TCG | 37.20 | 35.20 | 33.30 | 31.30 | 29.20 | 27.10 | 24.90 | 22.60 |
| | SDT | 72.30 | 81.50 | 90.70 | 99.90 | 109.00 | 118.20 | 127.30 | 136.40 |
| | KW | 1.27 | 1.44 | 1.61 | 1.81 | 2.02 | 2.27 | 2.56 | 2.90 |
| 55 (12.78) | TCG | 40.60 | 38.40 | 36.30 | 34.10 | 31.80 | 29.50 | 27.10 | 24.60 |
| | SDT | 73.70 | 82.80 | 91.90 | 101.00 | 110.10 | 119.20 | 128.30 | 137.30 |
| | KW | 1.27 | 1.44 | 1.61 | 1.81 | 2.02 | 2.27 | 2.56 | 2.90 |
| **CA16NW036–B** | | | | | | | | | |
| 30 (–1.11) | TCG | 25.50 | 27.70 | 27.70 | 26.60 | 24.70 | 22.60 | 20.40 | 18.40 |
| | SDT | 65.40 | 76.40 | 86.40 | 96.00 | 105.40 | 114.70 | 124.00 | 133.40 |
| | KW | 1.24 | 1.64 | 1.92 | 2.16 | 2.39 | 2.65 | 2.96 | 3.38 |
| 35 (1.67) | TCG | 29.20 | 31.00 | 30.80 | 29.50 | 27.50 | 25.20 | 22.90 | 20.70 |
| | SDT | 66.80 | 77.50 | 87.40 | 97.00 | 106.30 | 115.50 | 124.80 | 134.20 |
| | KW | 1.23 | 1.61 | 1.90 | 2.14 | 2.37 | 2.64 | 2.96 | 3.37 |
| 40 (4.44) | TCG | 33.10 | 34.50 | 34.00 | 32.50 | 30.30 | 27.90 | 25.40 | 23.10 |
| | SDT | 68.20 | 78.70 | 88.50 | 97.90 | 107.20 | 116.40 | 125.60 | 134.90 |
| | KW | 1.21 | 1.59 | 1.88 | 2.12 | 2.36 | 2.63 | 2.96 | 3.37 |
| 45 (7.22) | TCG | 36.90 | 37.90 | 37.20 | 35.50 | 33.10 | 30.50 | 27.90 | 25.40 |
| | SDT | 69.50 | 79.80 | 89.60 | 99.00 | 108.20 | 117.30 | 126.40 | 135.70 |
| | KW | 1.19 | 1.57 | 1.86 | 2.11 | 2.36 | 2.63 | 2.96 | 3.37 |
| 50 (10.0) | TCG | 40.60 | 41.40 | 40.40 | 38.50 | 35.90 | 33.20 | 30.40 | 27.70 |
| | SDT | 70.70 | 81.00 | 90.60 | 99.90 | 109.10 | 118.10 | 127.20 | 136.40 |
| | KW | 1.17 | 1.55 | 1.85 | 2.11 | 2.36 | 2.64 | 2.96 | 3.38 |
| 55 (12.78) | TCG | 44.30 | 44.70 | 43.50 | 41.40 | 38.70 | 35.70 | 32.70 | 29.90 |
| | SDT | 72.00 | 82.10 | 91.70 | 100.90 | 109.90 | 118.90 | 128.00 | 137.10 |
| | KW | 1.16 | 1.55 | 1.85 | 2.11 | 2.37 | 2.65 | 2.98 | 3.39 |

See notes on page 19

# CONDENSER ONLY RATINGS CONTINUED

| SST °F (°C) | | CONDENSER ENTERING AIR TEMPERATURES °F (°C) | | | | | | | |
|---|---|---|---|---|---|---|---|---|---|
| | | 55 (12.78) | 65 (18.33) | 75 (23.89) | 85 (29.44) | 95 (35.0) | 105 (40.56) | 115 (46.11) | 125 (51.67) |
| **CA16NW042–B** | | | | | | | | | |
| 30 (–1.11) | TCG | 36.10 | 34.10 | 32.30 | 30.40 | 28.60 | 26.60 | 24.40 | 22.00 |
| | SDT | 67.00 | 76.50 | 86.00 | 95.50 | 105.00 | 114.50 | 123.90 | 133.20 |
| | KW | 1.68 | 1.90 | 2.14 | 2.40 | 2.70 | 3.03 | 3.42 | 3.87 |
| 35 (1.67) | TCG | 39.80 | 37.60 | 35.50 | 33.50 | 31.50 | 29.30 | 26.90 | 24.30 |
| | SDT | 68.20 | 77.60 | 87.00 | 96.50 | 106.00 | 115.40 | 124.70 | 133.90 |
| | KW | 1.70 | 1.92 | 2.15 | 2.41 | 2.71 | 3.04 | 3.43 | 3.88 |
| 40 (4.44) | TCG | 43.80 | 41.30 | 39.00 | 36.80 | 34.60 | 32.20 | 29.60 | 26.80 |
| | SDT | 69.50 | 78.80 | 88.20 | 97.60 | 106.90 | 116.20 | 125.50 | 134.60 |
| | KW | 1.72 | 1.94 | 2.17 | 2.43 | 2.72 | 3.06 | 3.45 | 3.90 |
| 45 (7.22) | TCG | 48.00 | 45.30 | 42.80 | 40.30 | 37.90 | 35.20 | 32.40 | 29.30 |
| | SDT | 70.90 | 80.10 | 89.40 | 98.70 | 108.00 | 117.20 | 126.40 | 135.40 |
| | KW | 1.75 | 1.96 | 2.18 | 2.44 | 2.73 | 3.07 | 3.46 | 3.91 |
| 50 (10.0) | TCG | 52.40 | 49.50 | 46.70 | 44.10 | 41.30 | 38.50 | 35.40 | 32.00 |
| | SDT | 72.40 | 81.40 | 90.60 | 99.90 | 109.10 | 118.20 | 127.30 | 136.30 |
| | KW | 1.77 | 1.98 | 2.20 | 2.45 | 2.74 | 3.08 | 3.47 | 3.92 |
| 55 (12.78) | TCG | 57.20 | 54.00 | 51.00 | 48.00 | 45.00 | 41.80 | 38.40 | 34.70 |
| | SDT | 73.90 | 82.90 | 92.00 | 101.10 | 110.20 | 119.30 | 128.30 | 137.10 |
| | KW | 1.80 | 2.00 | 2.22 | 2.47 | 2.76 | 3.09 | 3.48 | 3.93 |
| **CA16NW043–B** | | | | | | | | | |
| 30 (–1.11) | TCG | 38.90 | 37.10 | 35.20 | 33.20 | 31.10 | 29.00 | 22.90 | 24.30 |
| | SDT | 67.00 | 76.50 | 86.10 | 95.60 | 105.10 | 114.60 | 122.70 | 133.40 |
| | KW | 1.74 | 1.96 | 2.20 | 2.47 | 2.78 | 3.12 | 3.44 | 3.92 |
| 35 (1.67) | TCG | 42.90 | 40.90 | 38.80 | 36.60 | 34.40 | 32.00 | 29.50 | 26.90 |
| | SDT | 68.10 | 77.60 | 87.10 | 96.60 | 106.00 | 115.50 | 124.80 | 134.10 |
| | KW | 1.75 | 1.97 | 2.21 | 2.48 | 2.79 | 3.13 | 3.52 | 3.94 |
| 40 (4.44) | TCG | 47.30 | 45.00 | 42.70 | 40.30 | 37.80 | 35.30 | 32.60 | 29.70 |
| | SDT | 69.40 | 78.90 | 88.30 | 97.70 | 107.10 | 116.40 | 125.70 | 134.90 |
| | KW | 1.75 | 1.98 | 2.22 | 2.50 | 2.80 | 3.15 | 3.53 | 3.97 |
| 45 (7.22) | TCG | 52.00 | 49.50 | 46.90 | 44.30 | 41.60 | 38.80 | 35.80 | 32.70 |
| | SDT | 70.80 | 80.20 | 89.50 | 98.90 | 108.20 | 117.40 | 126.60 | 135.80 |
| | KW | 1.76 | 1.98 | 2.23 | 2.51 | 2.82 | 3.16 | 3.55 | 3.99 |
| 50 (10.0) | TCG | 57.10 | 54.30 | 51.50 | 48.60 | 45.60 | 42.50 | 39.30 | 35.90 |
| | SDT | 72.30 | 81.60 | 90.90 | 100.10 | 109.40 | 118.50 | 127.70 | 136.70 |
| | KW | 1.77 | 1.99 | 2.24 | 2.52 | 2.83 | 3.18 | 3.57 | 4.00 |
| 55 (12.78) | TCG | 62.60 | 59.50 | 56.40 | 53.30 | 50.00 | 46.60 | 43.10 | 39.40 |
| | SDT | 73.90 | 83.10 | 92.30 | 101.50 | 110.60 | 119.70 | 128.80 | 137.70 |
| | KW | 1.77 | 2.00 | 2.25 | 2.53 | 2.84 | 3.19 | 3.59 | 4.02 |
| **CA16NW048–B** | | | | | | | | | |
| 30 (–1.11) | TCG | 42.80 | 40.60 | 38.30 | 36.00 | 33.60 | 31.10 | 28.50 | 25.80 |
| | SDT | 67.80 | 77.20 | 86.60 | 96.00 | 105.40 | 114.70 | 124.00 | 133.30 |
| | KW | 2.00 | 2.29 | 2.58 | 2.87 | 3.17 | 3.51 | 3.90 | 4.35 |
| 35 (1.67) | TCG | 47.40 | 44.80 | 42.30 | 39.70 | 37.10 | 34.40 | 31.60 | 28.60 |
| | SDT | 69.00 | 78.30 | 87.70 | 97.00 | 106.30 | 115.60 | 124.80 | 134.10 |
| | KW | 1.93 | 2.25 | 2.56 | 2.87 | 3.19 | 3.53 | 3.92 | 4.36 |
| 40 (4.44) | TCG | 52.30 | 49.50 | 46.60 | 43.80 | 40.90 | 37.90 | 34.90 | 31.60 |
| | SDT | 70.40 | 79.60 | 88.80 | 98.00 | 107.20 | 116.50 | 125.70 | 134.80 |
| | KW | 1.82 | 2.18 | 2.52 | 2.85 | 3.19 | 3.55 | 3.94 | 4.38 |
| 45 (7.22) | TCG | 57.80 | 54.60 | 51.40 | 48.20 | 45.00 | 41.70 | 38.30 | 34.80 |
| | SDT | 71.80 | 80.80 | 90.00 | 99.10 | 108.30 | 117.40 | 126.60 | 135.70 |
| | KW | 1.68 | 2.07 | 2.45 | 2.81 | 3.17 | 3.55 | 3.95 | 4.40 |
| 50 (10.0) | TCG | 63.70 | 60.10 | 56.50 | 52.90 | 49.40 | 45.70 | 42.00 | 38.10 |
| | SDT | 73.20 | 82.20 | 91.30 | 100.30 | 109.40 | 118.50 | 127.50 | 136.50 |
| | KW | 1.49 | 1.93 | 2.34 | 2.74 | 3.13 | 3.53 | 3.95 | 4.41 |
| 55 (12.78) | TCG | 70.10 | 66.00 | 62.00 | 58.00 | 54.10 | 50.00 | 45.90 | 41.60 |
| | SDT | 74.70 | 83.70 | 92.60 | 101.60 | 110.60 | 119.60 | 128.50 | 137.40 |
| | KW | 1.25 | 1.74 | 2.20 | 2.63 | 3.06 | 3.49 | 3.94 | 4.41 |
| **CA16NW054–B** | | | | | | | | | |
| 30 (–1.11) | TCG | 48.10 | 45.90 | 43.50 | 41.00 | 38.20 | 35.30 | 32.20 | 28.90 |
| | SDT | 69.20 | 78.70 | 88.10 | 97.50 | 106.80 | 116.10 | 125.30 | 134.50 |
| | KW | 2.22 | 2.51 | 2.80 | 3.12 | 3.49 | 3.90 | 4.39 | 4.97 |
| 35 (1.67) | TCG | 53.30 | 50.70 | 48.10 | 45.20 | 42.20 | 39.00 | 35.70 | 32.10 |
| | SDT | 70.60 | 80.00 | 89.30 | 98.60 | 107.90 | 117.10 | 126.20 | 135.40 |
| | KW | 2.21 | 2.51 | 2.82 | 3.15 | 3.51 | 3.93 | 4.41 | 4.98 |
| 40 (4.44) | TCG | 58.80 | 55.90 | 52.90 | 49.80 | 46.50 | 43.00 | 39.30 | 35.50 |
| | SDT | 72.00 | 81.30 | 90.60 | 99.80 | 109.00 | 118.10 | 127.20 | 136.30 |
| | KW | 2.20 | 2.52 | 2.83 | 3.17 | 3.54 | 3.96 | 4.44 | 5.00 |
| 45 (7.22) | TCG | 64.60 | 61.40 | 58.10 | 54.60 | 51.00 | 47.20 | 43.20 | 39.00 |
| | SDT | 73.60 | 82.80 | 91.90 | 101.10 | 110.20 | 119.20 | 128.20 | 137.20 |
| | KW | 2.19 | 2.52 | 2.85 | 3.19 | 3.56 | 3.98 | 4.46 | 5.02 |
| 50 (10.0) | TCG | 70.90 | 67.30 | 63.50 | 59.70 | 55.70 | 51.50 | 47.20 | 42.70 |
| | SDT | 75.20 | 84.30 | 93.40 | 102.40 | 111.40 | 120.40 | 129.30 | 138.20 |
| | KW | 2.18 | 2.52 | 2.86 | 3.21 | 3.59 | 4.01 | 4.49 | 5.04 |
| 55 (12.78) | TCG | 77.50 | 73.40 | 69.30 | 65.10 | 60.70 | 56.10 | 51.40 | 46.50 |
| | SDT | 76.90 | 85.90 | 94.90 | 103.80 | 112.80 | 121.60 | 130.40 | 139.20 |
| | KW | 2.17 | 2.52 | 2.87 | 3.23 | 3.62 | 4.05 | 4.52 | 5.07 |

See notes on page 19

# CONDENSER ONLY RATINGS CONTINUED

| SST °F (°C) | | CONDENSER ENTERING AIR TEMPERATURES °F (°C) | | | | | | | |
|---|---|---|---|---|---|---|---|---|---|
| | | 55 (12.78) | 65 (18.33) | 75 (23.89) | 85 (29.44) | 95 (35.0) | 105 (40.56) | 115 (46.11) | 125 (51.67) |
| CA16NW061 – B | | | | | | | | | |
| 30 (–1.11) | TCG | 53.50 | 50.90 | 48.30 | 45.50 | 42.70 | 39.70 | 36.50 | 0.00 |
| | SDT | 69.90 | 79.30 | 88.70 | 98.10 | 107.50 | 116.80 | 126.00 | 0.00 |
| | KW | 2.38 | 2.68 | 3.01 | 3.37 | 3.79 | 4.26 | 4.79 | 0.00 |
| 35 (1.67) | TCG | 59.00 | 56.10 | 53.20 | 50.20 | 47.20 | 43.80 | 40.40 | 36.70 |
| | SDT | 71.30 | 80.60 | 90.00 | 99.30 | 108.60 | 117.80 | 127.00 | 136.10 |
| | KW | 2.40 | 2.70 | 3.03 | 3.40 | 3.82 | 4.29 | 4.82 | 5.42 |
| 40 (4.44) | TCG | 64.90 | 61.70 | 58.50 | 55.20 | 51.90 | 48.30 | 44.70 | 40.70 |
| | SDT | 72.80 | 82.00 | 91.30 | 100.50 | 109.80 | 118.90 | 128.10 | 137.10 |
| | KW | 2.43 | 2.72 | 3.05 | 3.42 | 3.85 | 4.32 | 4.86 | 5.46 |
| 45 (7.22) | TCG | 71.20 | 67.70 | 64.20 | 60.60 | 57.00 | 53.10 | 49.20 | 45.00 |
| | SDT | 74.40 | 83.60 | 92.70 | 101.90 | 111.00 | 120.10 | 129.20 | 138.20 |
| | KW | 2.45 | 2.74 | 3.07 | 3.45 | 3.87 | 4.35 | 4.89 | 5.50 |
| 50 (10.0) | TCG | 78.00 | 74.10 | 70.30 | 66.40 | 62.40 | 58.30 | 54.00 | 49.40 |
| | SDT | 76.20 | 85.30 | 94.40 | 103.40 | 112.40 | 121.40 | 130.40 | 139.30 |
| | KW | 2.48 | 2.77 | 3.11 | 3.48 | 3.90 | 4.39 | 4.93 | 5.54 |
| 55 (12.78) | TCG | 85.10 | 80.90 | 76.70 | 72.50 | 68.20 | 63.70 | 59.00 | 54.10 |
| | SDT | 78.00 | 86.90 | 95.90 | 104.90 | 113.90 | 122.80 | 131.70 | 140.40 |
| | KW | 2.51 | 2.79 | 3.13 | 3.51 | 3.94 | 4.42 | 4.97 | 5.58 |

* AHRI listing applies only to systems shown in Combination Ratings table.

**KW** – Outdoor Unit Kilowatts Only.

**SDT** – Saturated Temperature Leaving Compressor (°F)

**SST** – Saturated Temperature Entering Compressor (°F/°C)

**TCG** – Gross Cooling Capacity (1000 Btuh)

# GUIDE SPECIFICATIONS
# GENERAL

**System Description**

Outdoor-mounted, air-cooled, split-system air conditioner unit suitable for ground or rooftop installation. Unit consists of a hermetic compressor, an air-cooled coil, propeller-type condenser fan, and a control box. Unit will discharge supply air upward as shown on contract drawings. Unit will be used in a refrigeration circuit to match up to a packaged fan coil or coil unit.

**Quality Assurance**

- Unit will be rated in accordance with the latest edition of AHRI Standard 210.
- Unit will be certified for capacity and efficiency, and listed in the latest AHRI directory.
- Unit construction will comply with latest edition of ANSI/ ASHRAE and with NEC.
- Unit will be constructed in accordance with UL standards and will carry the UL label of approval. Unit will have c-UL-us approval.
- Unit cabinet will be capable of withstanding Federal Test Method Standard No. 141 (Method 6061) 500-hr salt spray test.
- Air-cooled condenser coils will be leak tested at 150 psig and pressure tested at 450 psig.
- Unit constructed in ISO9001 approved facility.

**Delivery, Storage, and Handling**

- Unit will be shipped as single package only and is stored and handled per unit manufacturer's recommendations.

**Warranty (for inclusion by specifying engineer)**

- U.S. and Canada only.

# PRODUCTS

**Equipment**

Factory assembled, single piece, air-cooled air conditioner unit. Contained within the unit enclosure is all factory wiring, piping, controls, compressor, refrigerant charge Puron® (R-410A), and special features required prior to field start-up.

Unit Cabinet

- Unit cabinet will be constructed of galvanized steel, bonderized, and coated with a powder coat paint.
- 3 phase equipment available with dense grille only.
- Single phase equipment available with wide (W) or dense (A) grille option.

Fans

- Condenser fan will be direct-drive propeller type, discharging air upward.
- Condenser fan motors will be totally enclosed, 1-phase type with class B insulation and permanently lubricated bearings. Shafts will be corrosion resistant.
- Fan blades will be statically and dynamically balanced.
- Condenser fan openings will be equipped with coated steel wire safety guards.

Compressor

- Compressor will be hermetically sealed.
- Compressor will be mounted on rubber vibration isolators.

Condenser Coil

- Condenser coil will be air cooled.
- Coil will be constructed of aluminum fins mechanically bonded to copper tubes which are then cleaned, dehydrated, and sealed.

Refrigeration Components

- Refrigeration circuit components will include liquid-line shutoff valve with sweat connections, vapor-line shutoff valve with sweat connections, system charge of Puron® (R-410A) refrigerant, and compressor oil.
- Unit will be equipped with high-pressure switch, low pressure switch and filter drier for Puron refrigerant.

**Operating Characteristics**

- The capacity of the unit will meet or exceed _____ Btuh at a suction temperature of _____ °F/°C. The power consumption at full load will not exceed _____ kW.
- Combination of the unit and the evaporator or fan coil unit will have a total net cooling capacity of _____ Btuh or greater at conditions of _____ CFM entering air temperature at the evaporator at _____ °F/°C wet bulb and _____ °F/°C dry bulb, and air entering the unit at _____ °F/°C.
- The system will have a SEER of _____ Btuh/watt or greater at DOE conditions.

**Electrical Requirements**

- Nominal unit electrical characteristics will be _____ v, single phase, 60 hz. The unit will be capable of satisfactory operation within voltage limits of _____ v to _____ v.
- Unit electrical power will be single point connection.
- Control circuit will be 24v.

**Special Features**

- Refer to section of this literature identifying accessories and descriptions for specific features and available enhancements.

# SYSTEM DESIGN SUMMARY

1. Intended for outdoor installation with free air inlet and outlet. Outdoor fan external static pressure available is less than 0.01-IN W.C.
2. Minimum outdoor operating air temperature without low-ambient operation accessory is 55°F (12.8°C).
3. Maximum outdoor operating air temperature is 125°F (51.7°C).
4. For reliable operation, unit should be level in all horizontal planes.
5. For interconnecting refrigerant tube lengths greater than 80 ft (23.4 m) and/or 35 ft (10.7 m) vertical differential, consult Residential Piping and Longline Guideline and Service Manual available from equipment distributor.
6. If any refrigerant tubing is buried, provide a 6 in. (152.4 mm) vertical rise to the valve connections at the unit. Refrigerant tubing lengths up to 36 in. (914.4 mm) may be buried without further consideration. Do not bury refrigerant lines longer than 36 in. (914.4 mm).
7. Use only copper wire for electric connection at unit. Aluminum and clad aluminum are not acceptable for the type of connector provided.
8. Do not apply capillary tube indoor coils to these units.
9. Factory-supplied filter drier must be installed.

Copyright 2018 Carrier Corp. • 7310 W. Morris St. • Indianapolis, IN 46231
Edition Date: 09/18

**Catalog No: CA16NW−04PD**

**Manufacturer reserves the right to change, at any time, specifications and designs without notice and without obligations.**

Replaces: CA16NW−03PD