installation instructions

ACCESSORY DUCT COVER KIT
P/N 389114-701, 389126-701

555A/655A
Sizes 018-060
1-1/2 to 5 Tons

Cancels: New

IIK 555A-18-7
2/1/93

IMPORTANT — READ BEFORE INSTALLING

1. Read and become familiar with the installation instructions before installing the Accessory Duct Cover Kit.
2. Be sure installation conforms to all applicable local and national codes.
3. Installing and servicing air-conditioning equipment can be hazardous due to system pressure and electrical components. Only trained personnel should install or service air-conditioning equipment.
4. Untrained personnel can perform basic maintenance functions such as cleaning coils and cleaning and replacing filters. All other operations should be performed by trained service personnel. When working on air-conditioning equipment, observe precautions in the literature and on tags and labels attached to unit.
5. Follow all safety codes. Wear safety glasses and work gloves. Use quenching cloth for brazing operations. Have a fire extinguisher available.

⚠ **WARNING:** Before performing service or maintenance operations on system, turn off main power switches to indoor unit and outdoor unit. Turn off accessory heater power switch if applicable. Electrical shock can cause personal injury.

APPLICATION

This accessory is to be used to seal the side supply duct openings when the unit is to be used in the downflow discharge application on a roofcurb or jackstand.

INSTALLATION

Refer to Table 1 for proper Duct Cover Kit part number for the unit.

Table 1 — Duct Cover Accessory Kit Usage

UNIT SIZE	DUCT COVER KIT P/N
555A018-048 655A018-048	389114-701
555A060 655A060	389126-701

INSTALLATION FOR 555A,655A018-048 UNITS

1. Refer to Fig. 1 for 555A,655A018-048 accessory duct cover dimensions.
2. Locate 2 screws below circular duct flanges (see Fig. 2). Remove screws and save.
3. Place the accessory duct cover over both circular duct flanges such that the clearance holes on the bottom align with the existing screw holes on unit. Fasten accessory duct cover to unit using screws from Step 2.

⚠ **CAUTION:** Do not drill more than ½ in. deep in shaded area (see Fig. 2). Damage to refrigerant coil could result.

4. Completely attach accessory duct cover to unit using 6 factory-supplied no. 10 self-tapping screws in remaining screw holes of accessory duct cover.

INSTALLATION FOR 555A,655A060 UNITS

1. Refer to Fig. 3 for 555A,655A060 accessory duct cover dimensions.
2. Place duct covers over the unit duct flanges such that screw clearance slots on the duct covers are placed over existing screw heads on unit.
3. Locate existing clearance holes on sides of duct covers. See Fig. 3. Using the clearance holes, attach duct covers to the unit using 4 self-tapping screws provided (2 each flange).

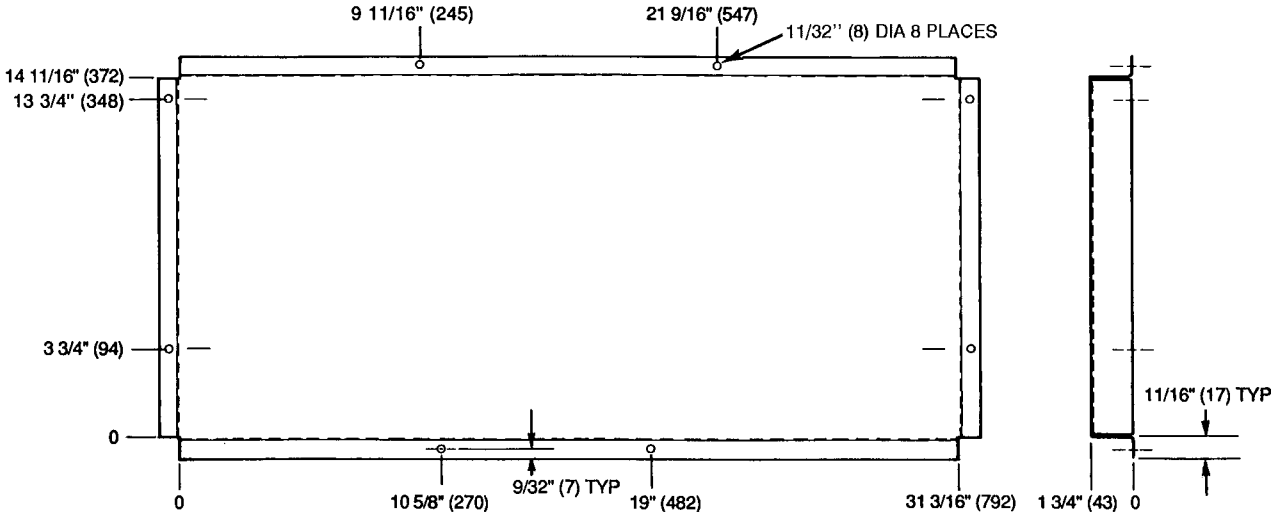

Fig. 1 — Accessory Duct Cover Dimensions for 555A,655A018-048 Units

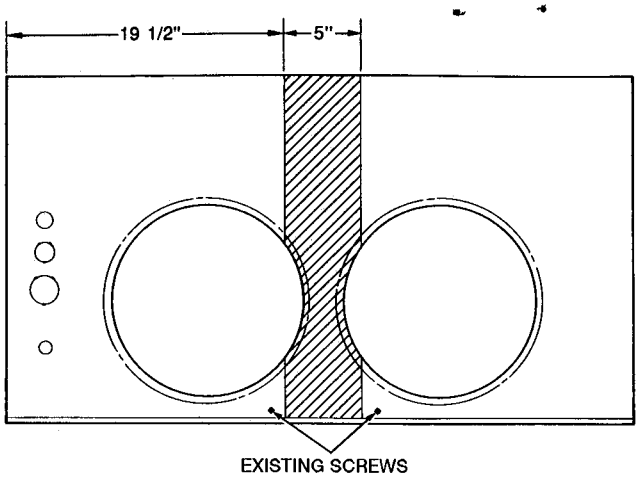

Fig. 2 – Do Not Drill More Than ½ in. Deep In Shaded Area (018-048 Unit Shown)

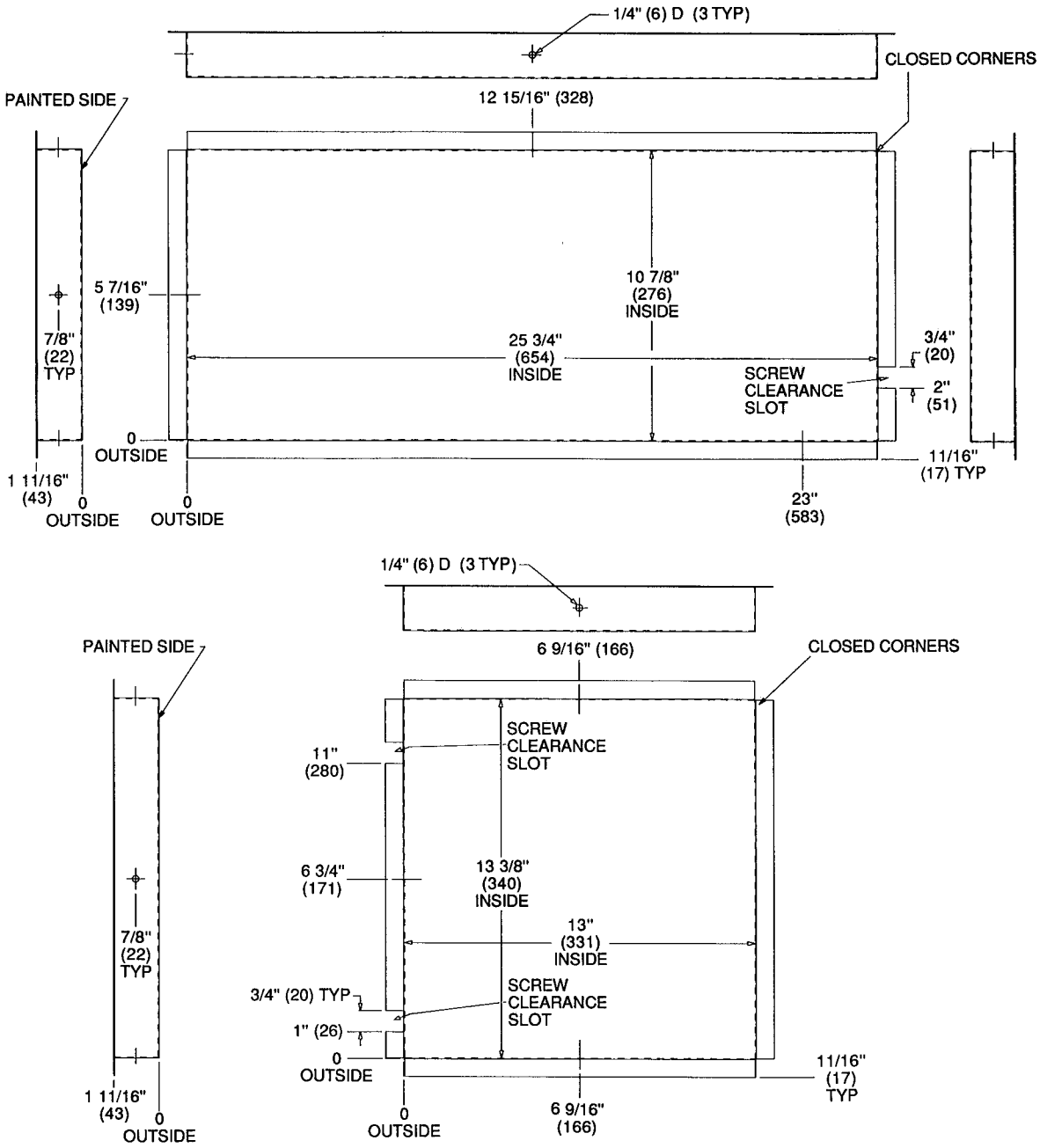

Fig. 3 – Accessory Duct Cover Dimensions for 555A,655A060 Units

Ⓢ Copyright 1993 Carrier Corporation