PG92MSA

Single-Stage, 35-in. (889 mm) Tall, 4-Way Multipoise High Efficiency Condensing Gas Furnace

Installation, Start-up, Operating and Service and Maintenance Instructions

NOTE: Read the entire instruction manual before starting the installation.

TABLE OF CONTENTS

Table 1 – Dimensions 3
SAFETY CONSIDERATIONS 3
Table 2 – Minimum Clearances to Combustible Materials for All Units 5
INTRODUCTION 5
Table 3 – Loose Parts Bag 6
CODES AND STANDARDS. 6
ELECTROSTATIC DISCHARGE (ESD) PRECAUTIONS PROCEDURE 7
ACCESSORIES 7
LOCATION 7
AIR FOR COMBUSTION AND VENTILATION 8
Table 4 – Minimum Free Area Required for Each Combustion Air Opening or Duct to Outdoors 9
Table 5 – Minimum Space Volumes for 100% Combustion, Ventilation and Dilution Air from Outdoors 9
CONDENSATE TRAP. 11
CONDENSATE DRAIN CONNECTION 13
INSTALLATION 16
Table 6 – Opening Dimensions - In. (mm) 18
FILTER ARRANGEMENT 19
Table 7 – Filter Media Pressure Drop (Clean) Versus Airflow - in. w.c. (Pa) 20
Table 8 – Filter Media Pressure Drop (Clean) Versus Face Velocity- in. w.c. (Pa) 21
Table 9 – Air Filter Selection and Duct Sizing - In. (mm). 21
Table 10 – Air Filter Located in Filter Cabinet 21
AIR DUCTS 23
GAS PIPING. 23
Table 11 – Maximum Capacity of Pipe 24
ELECTRICAL CONNECTIONS. 25
Table 12 – Electrical Data 25
ACCESS0RIES. 28
VENTING. 29
Table 13 – Vent Termination Kit for Direct Vent (2-pipe) Systems 30
Table 14 – Approved Combustion-Air and Vent Pipe, Fitting and Cement Materials 30
Table 15 – Maximum Equivalent Vent Length 39
Table 16 – Deductions from Maximum Equivalent Vent Length - Ft. (M) 40
Table 17 – Maximum Allowable Exposed Vent Lengths in Unconditioned Space Table - Ft. 43
Table 18 – Hanger Spacing 44
AIR DELIVERY - CFM. 47
Table 19 – Air Delivery - CFM (with filter) 47
Table 20 – Airflow Settings. 50
FURNACE CONTROL PROGRAMMING AND NAVIGATION 50
Table 21 – System Status Display Codes 51
Table 22 – Main Menu Options. 51
SERVICE LABEL 53
START-UP, ADJUSTMENT, AND SAFETY CHECK 53
Table 23 – Test Sequence 54
WIRING DIAGRAM 55
ADJUSTMENTS 56
Table 24 – Altitude Derate Multiplier for U.S.A. 57
Table 25 – Gas Rate (CU ft./hr). 58
Table 26 – Orifice Size and Manifold Pressure (in. w.c.) for Gas Input Rate 59
SERVICE AND MAINTENANCE PROCEDURES. 60
CARE AND MAINTENANCE 61
WINTERIZATION. 66
SEQUENCE OF OPERATION 67
Troubleshooting 68
PARTS REPLACEMENT INFORMATION GUIDE 72
MODEL NOMENCLATURE 72

To learn more about this appliance and installation via a mobile device, go to https://www.CAC/BDP.com/NFC or use the QR code below. To access airflow tables or troubleshooting guide on your mobile device go to mlctraining.com/training/techdocs/40/ or use the QR code below.

Mobile App QR Code

Airflow QR Code

A220943

Use of the AHRI Certified TM Mark indicates a manufacturer's participation in the program For verification of certification for individual products, go to www.ahridirectory.org.

A200352B

Portions of the text and tables are reprinted from NFPA 54/ANSI Z223.1E, with permission of National Fire Protection Association, Quincy, MA 02269 and American Gas Association, Washington DC 20001. This reprinted material is not the complete and official position of the NFPA or ANSI on the referenced subject, which is represented only by the standard in its entirety.

REQUIRED NOTICE FOR MASSACHUSETTS INSTALLATIONS
IMPORTANT

The Commonwealth of Massachusetts requires compliance with regulation 248 CMR as follows:

5.08: Modifications to NFPA-54, Chapter 10

2) Revise 10.8.3 by adding the following additional requirements:

a. For all side wall horizontally vented gas fueled equipment installed in every dwelling, building or structure used in whole or in part for residential purposes, including those owned or operated by the Commonwealth and where the side wall exhaust vent termination is less than seven (7) feet above finished grade in the area of the venting, including but not limited to decks and porches, the following requirements shall be satisfied:

1. INSTALLATION OF CARBON MONOXIDE DETECTORS. At the time of installation of the side wall horizontal vented gas fueled equipment, the installing plumber or gasfitter shall observe that a hard wired carbon monoxide detector with an alarm and battery back-up is installed on the floor level where the gas equipment is to be installed. In addition, the installing plumber or gasfitter shall observe that a battery operated or hard wired carbon monoxide detector with an alarm is installed on each additional level of the dwelling, building or structure served by the side wall horizontal vented gas fueled equipment. It shall be the responsibility of the property owner to secure the services of qualified licensed professionals for the installation of hard wired carbon monoxide detectors
   a. In the event that the side wall horizontally vented gas fueled equipment is installed in a crawl space or an attic, the hard wired carbon monoxide detector with alarm and battery back-up may be installed on the next adjacent floor level.
   b. In the event that the requirements of this subdivision can not be met at the time of completion of installation, the owner shall have a period of thirty (30) days to comply with the above requirements; provided, however, that during said thirty (30) day period, a battery operated carbon monoxide detector with an alarm shall be installed.
2. APPROVED CARBON MONOXIDE DETECTORS. Each carbon monoxide detector as required in accordance with the above provisions shall comply with NFPA 720 and be ANSI/UL 2034 listed and IAS certified.
3. SIGNAGE. A metal or plastic identification plate shall be permanently mounted to the exterior of the building at a minimum height of eight (8) feet above grade directly in line with the exhaust vent terminal for the horizontally vented gas fueled heating appliance or equipment. The sign shall read, in print size no less than one-half (1/2) inch in size, ”GAS VENT DIRECTLY BELOW. KEEP CLEAR OF ALL OBSTRUCTIONS”.
4. INSPECTION. The state or local gas inspector of the side wall horizontally vented gas fueled equipment shall not approve the installation unless, upon inspection, the inspector observes carbon monoxide detectors and signage installed in accordance with the provisions of 248 CMR 5.08(2)(a)1 through 4.
5. EXEMPTIONS: The following equipment is exempt from 248 CMR 5.08(2)(a)1 through 4:
   (1.) The equipment listed in Chapter 10 entitled ”Equipment Not Required To Be Vented” in the most current edition of NFPA 54 as adopted by the Board; and
   (2.) Product Approved side wall horizontally vented gas fueled equipment installed in a room or structure separate from the dwelling, building or structure used in whole or in part for residential purposes.
   a. MANUFACTURER REQUIREMENTS - GAS EQUIPMENT VENTING SYSTEM PROVIDED. When the manufacturer of Product Approved side wall horizontally vented gas equipment provides a venting system design or venting system components with the equipment, the instructions provided by the manufacturer for installation of the equipment and the venting system shall include:
1. Detailed instructions for the installation of the venting system design or the venting system components; and
2. A complete parts list for the venting system design or venting system.
   a. MANUFACTURER REQUIREMENTS - GAS EQUIPMENT VENTING SYSTEM NOT PROVIDED. When the manufacturer of a Product Approved side wall horizontally vented gas fueled equipment does not provide the parts for venting the flue gases, but identifies “special venting systems”, the following requirements shall be satisfied by the manufacturer:
3. The referenced “special venting system” instructions shall be included with the appliance or equipment installation instructions; and
4. The “special venting systems” shall be Product Approved by the Board, and the instructions for that system shall include a parts list and detailed installation instructions.
   a. A copy of all installation instructions for all Product Approved side wall horizontally vented gas fueled equipment, all venting instructions, all parts lists for venting instructions, and/or all venting design instructions shall remain with the appliance or equipment at the completion of the installation.

For questions regarding these requirements, please contact the Commonwealth of Massachusetts Board of State Examiners of Plumbers and Gas Fitters, 239 Causeway Street, Boston, MA 02114. 617-727-9952.

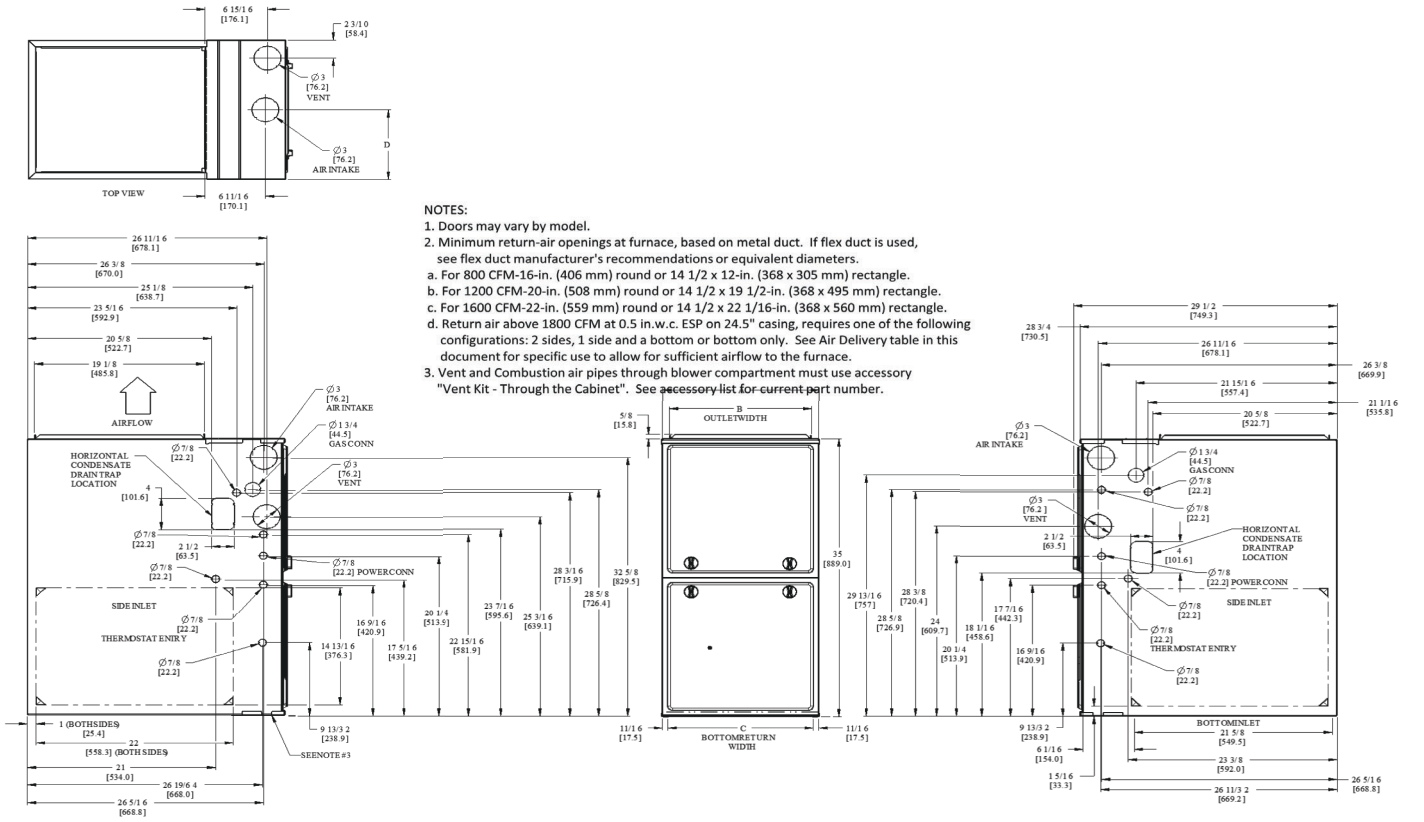

A210796

Fig. 1 – Dimensional Drawing

Table 1 – Dimensions

FURNACE SIZE	A	B	C	D	SHIP WT.
	CABINET WIDTH	OUTLET WIDTH	BOTTOM INLET WIDTH	AIR INTAKE	LB (KG)
36040A	14-3/16 (361)	12-1/2 (319)	12-9/16 (322)	7-1/8 (181)	122 (55)
36040B	17-1/2 (445)	15-7/8 (403)	16 (406)	8-3/4 (222)	123 (56)
36060A	14-3/16 (361)	12-1/2 (319)	12-9/16 (322)	7-1/8 (181)	128 (58)
42060B	17-1/2 (445)	15-7/8 (403)	16 (406)	8-3/4 (222)	136 (62)
48080B	17-1/2 (445)	15-7/8 (403)	16 (406)	8-3/4 (222)	144 (65)
60080C	21 (533)	19-3/8 (492)	19-1/2 (495)	10-1/2 (267)	153 (69)
60100C	21 (533)	19-3/8 (492)	19-1/2 (495)	10-1/2 (267)	160 (73)
60120D	24-1/2 (622)	22-7/8 (581)	23 (584)	12-1/4 (311)	180 (82)

⚠ WARNING

CARBON MONOXIDE POISONING HAZARD

Failure to follow this warning could result in personal injury and/or death.

Carbon Monoxide (CO) is a colorless, odorless, and tasteless poisonous gas that can be fatal when inhaled. Follow all installation, maintenance, and service instructions. See additional information below regarding the installation of a CO Alarm.

Most states in the USA and jurisdictions in Canada have laws that require the use of Carbon Monoxide (CO) alarms with fuel burning products. Examples of fuel burning products are furnaces, boilers, space heaters, generators, water heaters, stoves/ranges, clothes dryers, fireplaces, incinerators, automobiles, and other internal combustion engines. Even if there are no laws in your jurisdiction requiring a CO Alarm, it's highly recommended that whenever any fuel burning product is used in or around the home or business that the dwelling be equipped with a CO Alarm(s). The Consumer Product Safety Commission recommends the use of CO Alarm(s). The CO Alarm(s) must be installed, operated, and maintained according to the CO Alarm manufacturer's instructions. For more information about Carbon Monoxide, local laws, or to purchase a CO Alarm online, please visit the following website. https://www.kidde.com.

SAFETY CONSIDERATIONS

⚠ WARNING

FIRE, INJURY, OR DEATH HAZARD

Failure to follow this warning could result in property damage, personal injury, or death.

This furnace was manufactured to operate with natural gas. When fuel supply is Liquid Propane (LP), this furnace must be converted with a factory approved LP conversion kit. See furnace rating plate for approved conversion kit.

⚠ WARNING

FIRE, EXPLOSION, ELECTRICAL SHOCK, AND CARBON MONOXIDE POISONING HAZARD

Failure to follow this warning could result in dangerous operation, personal injury, death, or property damage.

Improper installation, adjustment, alteration, service, maintenance, or use can cause carbon monoxide poisoning, explosion, fire, electrical shock, or other conditions which may cause personal injury or property damage. Consult a qualified service agency, local gas supplier, or your distributor or branch for information or assistance. The qualified service agency must use only factory-authorized accessories and replacement parts when installing and servicing this product.

⚠ WARNING

FIRE, EXPLOSION, ELECTRICAL SHOCK, AND CARBON MONOXIDE POISONING HAZARD

Failure to follow this warning could result in dangerous operation, personal injury, death, or property damage.

Furnaces shall NOT be twinned (i.e. tandem or staged operation) unless approved in factory technical specifications literature for the furnace. A factory authorized, field-supplied Twinning Kit MUST be used. Consult furnace pre-sale literature for specific models approved for twinning and the correct twinning kit. Twinned furnaces must be installed on both a common supply AND a common return duct system as shown in the Twinning Kit Installation Instructions. Only two furnaces can be twinned on a common supply and return duct system using a factory authorized twinning kit.

⚠ WARNING

FIRE HAZARD

Failure to follow this warning could result in personal injury, death, or property damage.

Solvents, cements and primers are combustible. Keep away from heat, sparks and open flame. Use only in well-ventilated areas. Avoid breathing in vapor or allowing contact with skin or eyes.

⚠ CAUTION

FURNACE RELIABILITY HAZARD

Failure to follow this caution may result in unit component damage.

Application of this furnace should be indoors with special attention given to vent sizing and material, gas input rate, air temperature rise, unit leveling, and unit sizing.

⚠ WARNING

FIRE, INJURY, OR DEATH HAZARD

Failure to follow this warning could result in property damage, personal injury, or death.

Do not bypass any of the safety controls in the furnace, including but not limited to the main limit switch, rollout or burner thermal switch, and pressure switch/pressure transducer.

⚠ WARNING

PERSONAL INJURY AND PROPERTY DAMAGE HAZARD

Failure to follow this warning could result in property damage, personal injury, or death.

For continued performance, reliability, and safety, the only approved accessories and replacement parts are those specified by the equipment manufacturer. The use of non-manufacturer approved parts and accessories could invalidate the equipment limited warranty and result in fire risk, equipment malfunction, and failure. Please review manufacturer's instructions and replacement part catalogs available from your equipment supplier

Improper installation, adjustment, alteration, service, maintenance, or use can cause explosion, fire, electrical shock, or other conditions which may cause death, personal injury, or property damage. Consult a qualified installer, service agency, or your distributor or branch for information or assistance. The qualified installer or agency must use factory-authorized kits or accessories when modifying this product. Refer to the individual instructions packaged with the kits or accessories when installing.

Installing and servicing heating equipment can be hazardous due to gas and electrical components. Only trained and qualified personnel should install, repair, or service heating equipment. Untrained personnel can perform basic maintenance functions such as cleaning and replacing air filters. All other operations must be performed by trained service personnel. When working on heating equipment, observe precautions in literature, on tags, and on labels attached to or shipped with furnace and other safety precautions that may apply.

These instructions cover minimum requirements and conform to existing national standards and safety codes. In some instances, these instructions exceed certain local codes and ordinances, especially those that may not have kept up with changing residential construction practices. We require these instructions as a minimum for a safe installation.

Follow all safety codes. Wear safety glasses, protective clothing, and work gloves. Have a fire extinguisher available. Read these instructions thoroughly and follow all warnings or cautions included in literature and attached to the unit.

⚠ CAUTION

CUT HAZARD

Failure to follow this caution may result in personal injury.

Sheet metal parts may have sharp edges or burrs. Use care and wear appropriate protective clothing, safety glasses and gloves when handling parts, and servicing furnaces.

This is the safety-alert symbol ⚠. When you see this symbol on the furnace and in instructions or manuals, be alert to the potential for personal injury.

Understand the signal words DANGER, WARNING, and CAUTION. These words are used with the safety-alert symbol. DANGER identifies the most serious hazards which will result in severe personal injury or death. WARNING signifies a hazard which could result in personal injury or death. CAUTION is used to identify hazards which may result in minor personal injury or product and property damage. NOTE and NOTICE are used to highlight suggestions which will result in enhanced installation, reliability, or operation.

1. Use only with type of gas approved for this furnace. Refer to the furnace rating plate.

2. Install this furnace only in a location and position as specified in (LOCATION on p7).
3. Provide adequate combustion and ventilation air to the furnace space as specified in (AIR FOR COMBUSTION AND VENTILATION on p8).
4. Combustion products must be discharged outdoors. Connect this furnace to an approved vent system only, as specified in (VENTING on p29).
5. Never test for gas leaks with an open flame. Use a commercially available soap solution made specifically for the detection of leaks to check all connections, as specified in (GAS PIPING on p23).
6. Always install furnace to operate within the furnace's intended temperature-rise range with a duct system which has an external static pressure within the allowable range, as specified in (START-UP, ADJUSTMENT, AND SAFETY CHECK on p53). See furnace rating plate.
7. When a furnace is installed so that supply ducts carry air circulated by the furnace to areas outside the space containing the furnace, the return air shall also be handled by duct(s) sealed to the furnace casing and terminating outside the space containing the furnace. See (AIR DUCTS on p23).
8. A gas-fired furnace for installation in a residential garage must be installed as specified in the warning box in (LOCATION on p7).
9. The furnace may be used for construction heat provided that the furnace installation and operation complies with the first CAUTION in (LOCATION on p7).
10. These Multipoise Gas-Fired Furnaces are CSA design-certified for use with natural and propane gases (see furnace rating plate) and for installation in alcoves, attics, basements, closets, utility rooms, crawlspaces, and garages. The furnace is factory-shipped for use with natural gas. A CSA (A.G.A. and C.G.A.) listed accessory gas conversion kit is required to convert furnace for use with propane gas.
11. See Table 2 for required clearances to combustible construction.

Table 2 – Minimum Clearances to Combustible Materials for All Units

POSITION	CLEARANCE
REAR	0
FRONT (Combustion air openings in furnace and in structure)	1 in. (25 mm)
Required for service	*24 in. (610 mm)
All Sides of Supply Plenum	*1 in. (25 mm)
Sides	0
Vent	0
Top of Furnace	1 in. (25 mm)

*. Consult local building codes

12. Maintain a 1-in. (25 mm) clearance from combustible materials to supply air ductwork for a distance of 36 in. (914 mm) horizontally from the furnace. See NFPA 90B or local code for further requirements.
13. These furnaces SHALL NOT be installed directly on carpeting, combustible tile, or any other combustible material other than wood flooring. In downflow installations, factory accessory floor base MUST be used when installed on combustible materials and wood flooring. Special base is not required when this furnace is installed on manufacturer's cased evaporator coils or when manufacturer's evaporator coil casing is used. See Table 2 for clearance to combustible construction information.
14. Inspect and ensure all casing opening not used for vent, gas, electrical or auxiliary are filled with knockouts or casing plugs.

NOTICE

Important Installation and Start-up Procedures
Failure to follow this procedure may result in a nuisance smoke or odor complaint.
The manifold pressure, gas rate by meter clocking, temperature rise and operation must be checked after installation. Minor smoke and odor may be present temporarily after start-up from the manufacturing process. Some occupants are more sensitive to this minor smoke and odor. It is recommended that doors and windows be open during the first heat cycle.

INTRODUCTION

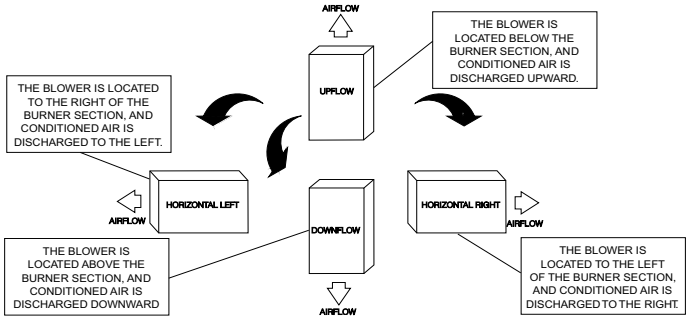

Fig. 2 – Multipoise Orientations

This 4-way multipoise Category IV condensing furnace is CSA design-certified as a direct-vent (2-pipe) or non-direct vent (1-pipe) furnace. See Fig. 2. The furnace is factory-shipped for use with natural gas. The furnace can be converted in the field for use with propane gas when a factory-supplied conversion kit is used. Refer to the furnace rating plate for conversion kit information.

These furnaces are not approved for installation in recreational vehicles or outdoors. Single-stage furnaces (40,000 through 120,000) are approved for installation in manufactured housing/mobile homes with manufacturer-approved accessory. The conversion kit is required for use with both natural and propane gas. The furnace must also be installed on a factory-supplied accessory combustible floor base or evaporator coil casing.

This furnace is designed for minimum continuous return-air temperature of 60°F (15°C) db or intermittent operation down to 55°F (13°C) db such as when used with a night setback thermostat. Return-air temperature must not exceed 80°F (27°C) db. Failure to follow these return-air temperature limits may affect reliability of heat exchangers, motors, and controls. See Fig. 3.

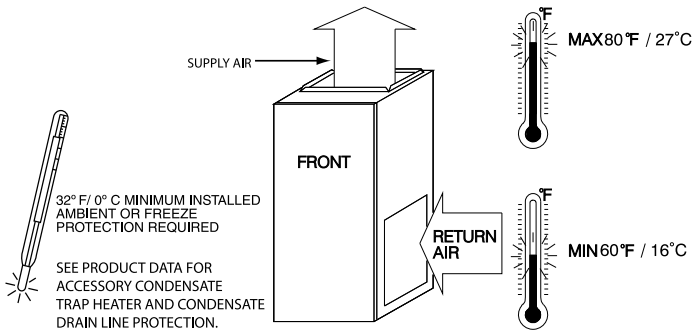

Fig. 3 – Freeze Protection and Return Air Temperature

The furnace should be sized to provide 100 percent of the design heating load requirement plus any margin that occurs because of furnace model size capacity increments. None of the furnace model sizes can be used if the heating load is 20,000 BTU or lower. Use Air Conditioning Contractors of America (Manual J and S); American Society of Heating,

Refrigerating, and Air-Conditioning Engineers; or other approved engineering method to calculate heating load estimates and select the furnace. Excessive oversizing of the furnace may cause the furnace and/or vent to fail prematurely, customer discomfort and/or vent freezing.

Failure to follow these guidelines is considered faulty installation and/or misapplication of the furnace; and resulting failure, damage, or repairs may impact warranty coverage.

For accessory installation details, refer to the applicable instruction literature.

NOTE: Remove all shipping materials, loose parts bag, and literature before operating the furnace. See Table 3.

Table 3 – Loose Parts Bag

DESCRIPTION	QUANTITY
Outlet Restrictor Plate (provided with 40K BTUH furnaces only; see Note)	1
Air Intake Pipe Flange	1
Vent Pipe Flange	1
Pipe Flange Gaskets	2
Sharp Tip Screws (Vent and Inlet Flanges)	10
Vent Pipe Coupling	1
Vent Pipe Coupling Clamps	2
Pressure Switch Tube	1
Rubber Drain Elbow	1
Drain Tube Clamps	4
1/2-in. CPVC to 3/4-in. PVC Pipe Adapter	1
Gas Line Grommet	1
Junction Box Cover	1
Junction Box Base	1
Green Ground Screw	1
Blunt Tip Screws (Junction Box)	3
Thermostat Wire Grommet	1
Drain Extension Tube (Z-pipe) (Provided separately in furnace)	1

WARNING

FIRE HAZARD

Failure to follow this warning could result in personal injury, death and/or property damage.

Do not install the furnace on its back or hang furnace with control compartment facing downward. Safety control operation will be adversely affected. Never connect return-air ducts to the back of the furnace. See Fig. 4.

NOTE: The 40K size is the only furnace that receives the outlet restrictor in the loose parts bag. See Table 15, Maximum Equivalent Vent Length.

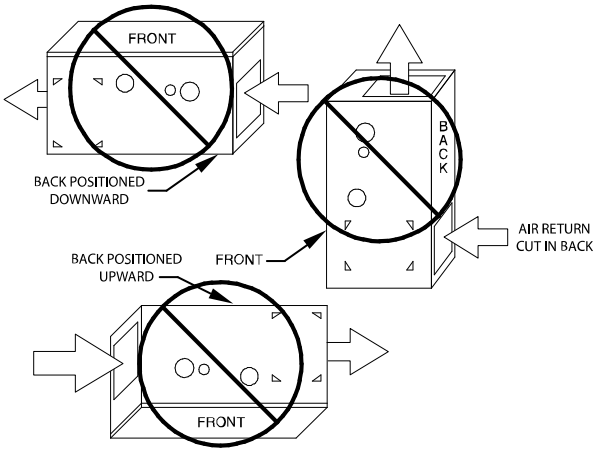

A12182

Fig. 4 – Prohibited Installations

WARNING

FIRE, INJURY OR DEATH HAZARD

Failure to follow this warning could result in personal injury, death and/or property damage.

When the furnace is installed in a residential garage, the burners and burner ignition devices must be located at least 18 in. (457 mm) above the floor. The furnace must be located or protected to avoid damage by vehicles. When the furnace is installed in a public garage, airplane hangar, or other building having a hazardous atmosphere, the furnace must be installed in accordance with the current edition of NFPA 54/ANSI Z223.1 or CAN/CSA B149.2. See Fig. 5.

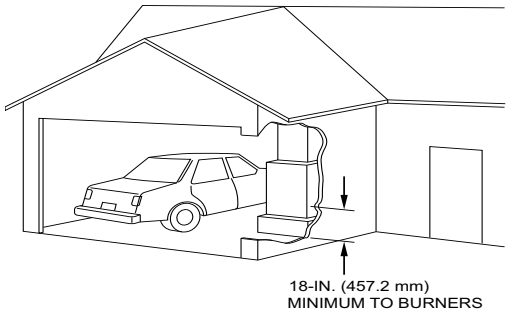

A93044

Fig. 5 – Installation in a Garage

CODES AND STANDARDS

Follow all national and local codes and standards in addition to these instructions. The installation must comply with regulations of the serving gas supplier, local building, heating, plumbing, and other codes. In absence of local codes, the installation must comply with the national codes listed below and all authorities having jurisdiction.

In the United States and Canada, follow all codes and standards for the following:

Safety

- US: Current edition of National Fuel Gas Code NFPA 54/ANSI Z223.1 and the Installation Standards, Warm Air Heating and Air Conditioning Systems ANSI/NFPA 90B
- A manufactured (Mobile) home installation must conform with the Manufactured Home Construction and Safety Standard, Title 24 CFR, Part 3280, or when this standard is not applicable, the Standard for Manufactured Home Installation (Manufactured Home Sites, Communities, and Set-Ups), ANSI/NCS A225.1, and/or CAN/CSA-Z240, MH Series Mobile Homes
- CANADA: Current edition of National Standard of Canada, Natural Gas and Propane Installation Code (NSCNGPIC) CAN/CSA B149.1

General Installation

- US: NFPA 54/ANSI Z223 and the NFPA 90B. For copies, contact the National Fire Protection Association Inc., Batterymarch Park, Quincy, MA 02269; or for only the NFPA 54/ANSI Z223 contact the American Gas Association, 400 N. Capitol, N.W., Washington DC 20001
- CANADA: NSCNGPIC. For a copy, contact Standard Sales, CSA International, 178 Rexdale Boulevard, Etobicoke (Toronto), Ontario, M9W 1R3, Canada

Combustion and Ventilation Air

- US: section 9.3 of the current edition of NFPA 54/ANSI Z223.1 Air for Combustion and Ventilation
- CANADA: Part 8 of the current edition of CAN/CSA B149.1, Venting Systems and Air Supply for Appliances

Duct Systems

- US and CANADA: Current edition of Air Conditioning Contractors Association (ACCA) Manual D, Sheet Metal and Air Conditioning Contractors National Association (SMACNA), or American Society of Heating, Refrigeration, and Air Conditioning Engineers (ASHRAE) Fundamentals Handbook Chapter 35

Acoustical Lining and Fibrous Glass Duct

- US and CANADA: Current edition of SMACNA, NFPA 90B as tested by UL Standard 181 for Class I Rigid Air Ducts

Gas Piping and Gas Pipe Pressure Testing

- US: Current edition of NFPA 54/ANSI Z223.1; Chapters 5, 6, 7, and 8 and national plumbing codes.
- CANADA: Current edition of CAN/CSA-B149.1, Parts 4, 5, 6, and 9.

In the state of Massachusetts:

- This product must be installed by a licensed plumber or gas fitter.
- When flexible connectors are used, the maximum length shall not exceed 36 in. (914 mm).
- When lever type gas shutoffs are used they shall be T-handle type.
- The use of copper tubing for gas piping is not approved by the state of Massachusetts.

Electrical Connections

- US: Current edition of National Electrical Code (NEC) NFPA 70
- CANADA: Canadian Electrical Code CSA C22.1

Condensate Drain Connection

- US: Current edition of National Standard Plumbing Code, section 8.7.
- Canada: Current edition of National Plumbing Code of Canada in Canada.

ELECTROSTATIC DISCHARGE (ESD) PRECAUTIONS PROCEDURE

⚠ CAUTION

FURNACE RELIABILITY HAZARD

Failure to follow this caution may result in unit component damage.

Electrostatic discharge can affect electronic components. Take precautions during furnace installation and servicing to protect the furnace electronic control. Precautions will prevent electrostatic discharges from personnel and hand tools which are held during the procedure. These precautions will help to avoid exposing the control to electrostatic discharge by putting the furnace, the control, and the person at the same electrostatic potential.

1. Disconnect all power to the furnace. Multiple disconnects may be required. DO NOT TOUCH THE CONTROL OR ANY WIRE CONNECTED TO THE CONTROL PRIOR TO DISCHARGING YOUR BODY'S ELECTROSTATIC CHARGE TO GROUND.
2. Firmly touch the clean, unpainted, metal surface of the furnace chassis which is close to the control. Tools held in a person's hand during grounding will be satisfactorily discharged.
3. After touching the chassis, you may proceed to service the control or connecting wires as long as you do nothing to recharge your body with static electricity (for example; DO NOT move or shuffle your feet, do not touch ungrounded objects, etc.).
4. If you touch ungrounded objects (and recharge your body with static electricity), firmly touch a clean, unpainted metal surface of the furnace again before touching control or wires.
5. Use this procedure for installed and uninstalled (ungrounded) furnaces.
6. Before removing a new control from its container, discharge your body's electrostatic charge to ground to protect the control from damage. If the control is to be installed in a furnace, follow items 1 through 4 before bringing the control or yourself in contact with the furnace. Put all used and new controls into containers before touching ungrounded objects.
7. An ESD service kit (available from commercial sources) may also be used to prevent ESD damage.

ACCESSORIES

See Product Data for a list of accessories for this product.

LOCATION

General

These furnaces are shipped with materials to assist in proper furnace installation. These materials are shipped in the main blower compartment.

See Table 3 for loose parts bag contents.

This furnace must:

- be installed so the electrical components are protected from water.
- not be installed directly on any combustible material other than wood flooring (refer to SAFETY CONSIDERATIONS).
- be located close to the chimney or vent and attached to an air distribution system. Refer to Air Ducts section.
- be provided ample space for servicing and cleaning. Always comply with minimum fire protection clearances shown in Table 2 or on the furnace clearance to combustible construction label.

The following types of furnace installations may require OUTDOOR AIR for combustion due to chemical exposures:

- Commercial buildings
- Buildings with indoor pools
- Laundry rooms
- Hobby or craft rooms
- Chemical storage areas

If air is exposed to the following substances, it should not be used for combustion air, and outdoor air may be required for combustion:

- Permanent wave solutions
- Chlorinated waxes and cleaners
- Chlorine based swimming pool chemicals
- Water softening chemicals
- De-icing salts or chemicals
- Carbon tetrachloride
- Halogen type refrigerants
- Cleaning solvents (such as perchloroethylene)
- Printing inks, paint removers, varnishes, etc.
- Hydrochloric acid
- Cements and glues
- Antistatic fabric softeners for clothes dryers
- Masonry acid washing materials

All fuel-burning equipment must be supplied with air for fuel combustion. Sufficient air must be provided to avoid negative pressure in the equipment room or space. A positive seal must be made between the furnace cabinet and the return-air duct to prevent pulling air from the burner area.

⚠ CAUTION

PERSONAL INJURY AND/OR PROPERTY DAMAGE HAZARD

Improper use or installation of this furnace may result in premature furnace component failure. Unless otherwise prohibited, this gas furnace may be used for heating buildings under construction provided that:

- The furnace is permanently installed with all electrical wiring, piping, venting and ducting installed according to these installation instructions. A return air duct is provided, sealed to the furnace casing, and terminated outside the space containing the furnace. This prevents a negative pressure condition as created by the circulating air blower, causing a flame rollout and/or drawing combustion products into the structure.
- The furnace is controlled by a thermostat. It may not be "hot wired" to provide heat continuously to the structure without thermostatic control.
- Clean outside air is provided for combustion. This is to minimize the corrosive effects of adhesives, sealers and other construction materials. It also prevents the entrainment of drywall dust into combustion air, which can cause fouling and plugging of furnace components.
- The temperature of the return air to the furnace is maintained between 55°F (13°C) and 80°F (27°C), with no evening setback or shutdown. The use of the furnace while the structure is under construction is deemed to be intermittent operation per our installation instructions.
- The air temperature rise is within the rated rise range on the furnace rating plate, and the gas input rate has been set to the nameplate value.
- The filters used to clean the circulating air during the construction process must be either changed or thoroughly cleaned prior to occupancy.
- The furnace, ductwork and filters are cleaned as necessary to remove drywall dust and construction debris from all HVAC system components after construction is completed.
- Verify proper furnace operating conditions including ignition, gas input rate, air temperature rise, and venting according to these installation instructions.

⚠ WARNING

CARBON MONOXIDE POISONING / COMPONENT DAMAGE HAZARD

Failure to follow this warning could result in personal injury or death and unit component damage.

Corrosive or contaminated air may cause failure of parts containing flue gas, which could leak into the living space. Air for combustion must not be contaminated by halogen compounds, which include fluoride, chloride, bromide, and iodide. These elements can corrode heat exchangers and shorten furnace life. Air contaminants are found in aerosol sprays, detergents, bleaches, cleaning solvents, salts, air fresheners, and other household products. Do not install furnace in a corrosive or contaminated atmosphere. Make sure all combustion and circulating air requirements are met, in addition to all local codes and ordinances.

⚠ CAUTION

FURNACE RELIABILITY HAZARD

Failure to follow this caution may result in nuisance limit switch cycling and unit component damage.

When a 17-1/2-in. wide upflow N coil is used with a 42060B furnace, the N coil must either be raised using a transition piece at least 3-in. (76 mm) high or if a transition piece is not used, the refrigerant lines must point to the front of the furnace casing.

AIR FOR COMBUSTION AND VENTILATION

Introduction

Direct Vent (2-pipe) Applications

When the furnace is installed as a direct vent (2-pipe) furnace, no special provisions for air for combustion are required. However, other gas appliances installed in the space with the furnace may require outside air for combustion. Follow the guidelines below to ensure that other gas appliances have sufficient air for combustion.

Non-Direct Vent (1-pipe) Applications

When the furnace is installed as a non-direct vent (1-pipe) furnace, it will be necessary to ensure there is adequate air for combustion. Other gas appliances installed with the furnace may also require air for combustion and ventilation in addition to the amount of combustion air and ventilation air required for the furnace. Follow the guidelines below to ensure that the furnace and other gas appliances have sufficient air for combustion.

Ventilated Combustion Air Applications (for U.S. Only)

When the furnace is installed using the ventilated combustion air option, the attic or crawlspace must freely communicate with the outdoor to provide sufficient air for combustion. The combustion air pipe cannot be terminated in attics or crawlspaces that use ventilation fans designed to operate during the heating season. If ventilation fans are present in these areas, the combustion air pipe must terminate outdoors as a Direct Vent/ 2-Pipe system.

All air for combustion is piped directly to the furnace from a space that is well ventilated with outdoor air (such as an attic, crawl space or equipment closet) and the space is well isolated from the living space or garage. In addition, other gas appliances installed in the space with the furnace may require outside air for combustion. Follow the guidelines below to ensure that the roof or crawlspace walls have sufficient free area to provide sufficient air for combustion and ventilation for the furnaces. The guidelines below can be used to ensure that other gas appliances have sufficient air for combustion.

Provisions for adequate combustion, ventilation, and dilution air must be provided in accordance with:

- U.S.A. Installations: section 9.3 of the current edition of NFPA 54/ANSI Z223.1, Air for Combustion and Ventilation and applicable provisions of the local building codes.

⚠ CAUTION

FURNACE CORROSION HAZARD

Failure to follow this caution may result in furnace damage.

Air for combustion must not be contaminated by halogen compounds, which include fluoride, chloride, bromide, and iodide. These elements can corrode heat exchangers and shorten furnace life. Air contaminants are found in aerosol sprays, detergents, bleaches, cleaning solvents, salts, air fresheners, and other household products.

⚠ WARNING

CARBON MONOXIDE POISONING HAZARD

Failure to follow this warning could result in personal injury or death.

The operation of exhaust fans, kitchen ventilation fans, clothes dryers, attic exhaust fans or fireplaces could create a NEGATIVE PRESSURE CONDITION at the furnace. Make-up air MUST be provided for the ventilation devices, in addition to that required by the furnace. Refer to the Carbon Monoxide Poisoning Hazard warning in the venting secondtion of these instructions to determine if an adequate amount of make-up air is available.

The requirements for combustion and ventilation air depend upon whether or not the furnace is located in a space having a volume of at least 50 cubic feet per 1,000 BTUh input rating for all gas appliances installed in the space.

- Spaces having less than 50 cubic feet per 1,000 BTUh (4.8 cubic meters per kW) require the Outdoor Combustion Air Method.
- Spaces having at least 50 cubic feet per 1,000 BTUh (4.8 cubic meters per kW) may use the Indoor Combustion Air, Standard or Known Air Infiltration Method.

Outdoor Combustion Air Method

1. Provide the space with sufficient air for proper combustion, ventilation, and dilution of flue gases using permanent horizontal or vertical duct(s) or opening(s) directly communicating with the outdoors or spaces that freely communicate with the outdoors.
2. Fig. 6 illustrates how to provide TWO OUTDOOR OPENINGS, one inlet and one outlet combustion and ventilation air opening, to the outdoors.
   a. One opening MUST commence within 12 in. (300 mm) of the ceiling and the secondond opening MUST commence within 12 in. (300 mm) of the floor.
   b. Size openings and ducts per Fig. 6 and Table 4.
   c. TWO HORIZONTAL DUCTS require 1 sq. in. (645 sq. mm) of free area per 2,000 BTUh (1,100 mm2/kW) of combined input for all gas appliances in the space per Fig. 6 and Table 4.
   d. TWO OPENINGS OR VERTICAL DUCTS require 1 sq. in. (645 sq. mm) of free area per 4,000 BTUh (550 mm2/kW) for combined input of all gas appliances in the space per Fig. 6 and Table 4.

Table 4 – Minimum Free Area Required for Each Combustion Air Opening or Duct to Outdoors

FURNACE INPUT (BTUH)	TWO HORIZONTAL DUCTS (1 SQ. IN./2,000 BTUH) (1,100 SQ. MM/KW)		SINGLE DUCT OR OPENING (1 SQ. IN./3,000 BTUH) (734 SQ. MM/KW)		TWO OPENINGS OR VERTICAL DUCTS (1 SQ. IN./4,000 BTUH) (550 SQ. MM/KW)	
40,000*	20 (12904)	5 (127)	14 (8696)	5 (127)	10 (6452)	4 (102)
60,000	30 (19355)	6 (152)	20 (13043)	5 (127)	15 (9678)	5 (127)
80,000	40 (25807)	7 (178)	27 (17391)	6 (152)	20 (12904)	5 (127)
100,000	50 (32258)	8 (203)	34 (21739)	7 (178)	25 (16130)	6 (152)
120,000	60 (38709)	9 (229)	40 (26087)	7 (178)	30 (19355)	6 (152)

EXAMPLES: Determining Free Area

FURNACE		WATER HEATER		TOTAL INPUT		
100,000	+	30,000	=	(130,000 divided by 4,000)	=	32.5 Sq. In. for each two Vertical Ducts or Openings
60,000	+	40,000	=	(100,000 divided by 3,000)	=	33.3 Sq. In. for each Single Duct or Opening
80,000	+	30,000	=	(110,000 divided by 2,000)	=	55.0 Sq. In. for each two Horizontal Ducts

Table 5 – Minimum Space Volumes for 100% Combustion, Ventilation and Dilution Air from Outdoors

OTHER THAN FAN-ASSISTED TOTAL (1,000'S BTUH GAS INPUT RATE)				FAN-ASSISTED TOTAL (1,000'S BTUH GAS INPUT RATE)				
ACH	**30**	**40**	**50**	**40**	**60**	**80**	**100**	**120**
	Space Volume Ft^3 (M^3)							
0.60	1,050 (29.7)	1,400 (39.6)	1,750 (49.5)	1,400 (39.6)	1,500 (42.5)	2,000 (56.6)	2,500 (70.8)	3,000 (84.9)
0.50	1,260 (35.6)	1,680 (47.5)	2,100 (59.4)	1,680 (47.5)	1,800 (51.0)	2,400 (67.9)	3,000 (84.9)	3,600 (101.9)
0.40	1,575 (44.5)	2,100 (59.4)	2,625 (74.3)	2,100 (59.4)	2,250 (63.7)	3,000 (84.9)	3,750 (106.1)	4,500 (127.3)
0.30	2,100 (59.4)	2,800 (79.2)	3,500 (99.1)	2,800 (79.2)	3,000 (84.9)	4,000 (113.2)	5,000 (141.5)	6,000 (169.8)
0.20	3,150 (89.1)	4,200 (118.9)	5,250 (148.6)	4,200 (118.9)	4,500 (127.3)	6,000 (169.8)	7,500 (212.2)	9,000 (254.6)
0.10	6,300 (178.0)	8,400 (237.8)	10,500 (297.3)	8,400 (237.8)	9,000 (254.6)	12,000 (339.5)	15,000 (424.4)	18,000 (509.2)
0.00	NP	NP	NP	NP	NP	NP	NP	NP

NP = Not Permitted

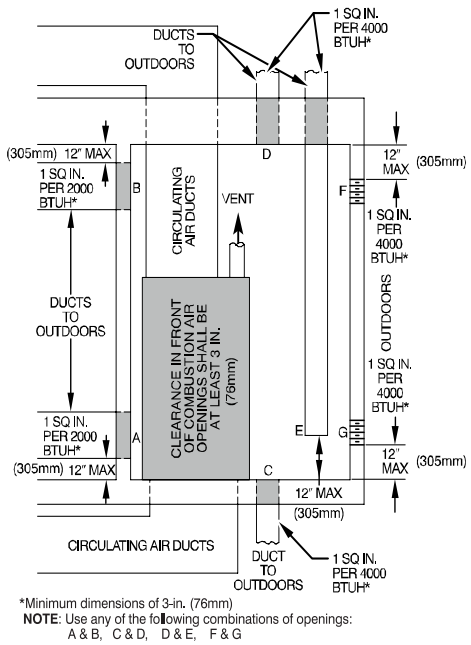

L12F012

Fig. 6 – Air for Combustion, Ventilation, and Dilution for Outdoors

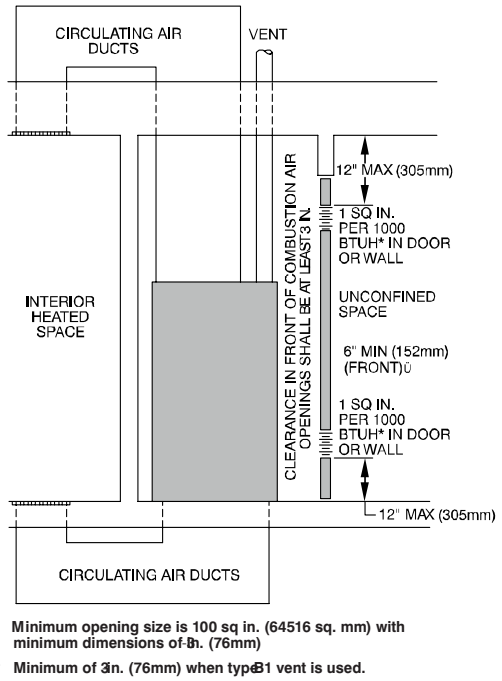

L12F013

Fig. 7 – Air for Combustion, Ventilation, and Dilution from Indoors

3. ONE OUTDOOR OPENING requires:
   a. 1 sq. in. (645 sq. mm) of free area per 3,000 BTUh (734 mm2/kW) for combined input of all gas appliances in the space per Fig. 6 and Table 4.
   b. Not less than the sum of the areas of all vent connectors in the space.

The opening shall commence within 12 in. (300 mm) of the ceiling. Appliances in the space shall have clearances of at least 1 in. (25 mm) from the sides and back and 6 in. (150 mm) from the front. The opening shall directly communicate with the outdoors or shall communicate through a vertical or horizontal duct to the outdoors or spaces (crawl or attic) that freely communicate with the outdoors.

Indoor Combustion Air NFPA & AGA Standard and Known-Air-Infiltration Rate Methods

Indoor air is permitted for combustion, ventilation, and dilution, if the Standard or Known-Air-Infiltration Method is used.

⚠ WARNING

CARBON MONOXIDE POISONING HAZARD

Failure to follow this warning could result in personal injury or death.

Many homes require air to be supplied from outdoors for furnace combustion, ventilation, and dilution of flue gases.

The furnace combustion air supply must be provided in accordance with this instruction manual.

Standard Method

1. The space has no less volume than 50 cubic feet per 1,000 BTUh of the maximum input ratings for all gas appliances installed in the space and
2. The air infiltration rate is not known to be less than 0.40 air changes per hour (ACH).

The Known Air Infiltration Rate Method shall be used, if the infiltration rate is known to be:

1. Less than 0.40 ACH and
2. Equal to or greater than 0.10 ACH

Infiltration rates greater than 0.60 ACH shall not be used. The minimum required volume of the space varies with the number of ACH and shall be determined per Table 5 or Equations 1 and 2. Determine the minimum required volume for each appliance in the space and add the volumes together to get the total minimum required volume for the space.

Table 5 - Minimum Space Volumes were determined by using the following equations from the current edition of the National Fuel Gas Code ANSI Z223.1/NFPA 54, 9.3.2.2:

1. For other than fan-assisted appliances, such as a draft hood-equipped water heater:

$$\text{Volume}_{\text{Other}} = \frac{21\text{ft}^3}{\text{ACH}}\left(\frac{I_{\text{other}}}{1000\ \text{Btu/hr}}\right)$$

A04002

2. For fan-assisted appliances such as this furnace:

$$\text{Volume}_{\text{Fan}} = \frac{15\text{ft}^3}{\text{ACH}}\left(\frac{I_{\text{fan}}}{1000\ \text{Btu/hr}}\right)$$

A04003

If: I_{other} = combined input of all other than fan-assisted appliances in BTUh/hr

I_{fan} = combined input of all fan-assisted appliances in BTUh/hr

ACH = air changes per hour (ACH shall not exceed 0.60.)

The following requirements apply to the Standard Method and to the Known Air Infiltration Rate Method.

1. Adjoining rooms can be considered part of a space if:
   a. There are no closeable doors between rooms.
   b. Combining spaces on same floor level. Each opening shall have free area of at least 1 in.2/1,000 BTUh (2,000 mm2/kW) of the total input rating of all gas appliances in the space, but not less than 100 in.2 (0.06 m2). One opening shall commence within 12 in. (300 mm) of the ceiling and the second opening shall commence within 12 in. (300 mm) of the floor. The minimum dimension of air openings shall be at least 3 in. (80 mm). See Fig. 7.
   c. Combining space on different floor levels. The volumes of spaces on different floor levels shall be considered as communicating spaces if connected by one or more permanent

openings in doors or floors having free area of at least 2 in.2/1,000 BTUh (4,400 mm2/kW) of total input rating of all gas appliances.

2. An attic or crawlspace may be considered a space that freely communicates with the outdoors provided there are adequate permanent ventilation openings directly to outdoors having free area of at least 1-in.2/4,000 BTUh of total input rating for all gas appliances in the space.
3. In spaces that use the Indoor Combustion Air Method, infiltration should be adequate to provide air for combustion, permanent ventilation and dilution of flue gases. However, in buildings with unusually tight construction, additional air MUST be provided using the methods described in the Outdoor Combustion Air Method section.
4. Unusually tight construction is defined as Construction with:
   a. Walls and ceilings exposed to the outdoors have a continuous, sealed vapor barrier. Openings are gasketed or sealed and
   b. Doors and openable windows are weatherstripped and
   c. Other openings are caulked or sealed. These include joints around window and door frames, between sole plates and floors, between wall-ceiling joints, between wall panels, at penetrations for plumbing, electrical and gas lines, etc.

Combination of Indoor and Outdoor Air

1. Indoor openings shall comply with the Indoor Combustion Air Method below and,
2. Outdoor openings shall be located as required in the Outdoor Combustion Air Method mentioned previously and,
3. Outdoor openings shall be sized as follows:
   a. Calculate the Ratio of all Indoor Space volume divided by required volume for Indoor Combustion Air Method below.
   b. Outdoor opening size reduction Factor is 1 minus the Ratio in a. above.
   c. Minimum size of Outdoor openings shall be the size required in Outdoor Combustion Air Method above multiplied by reduction Factor in b. above. The minimum dimension of air openings shall be not less than 3 in. (80 mm).

CONDENSATE TRAP

Condensate Trap - Upflow Orientation

When the furnace is installed in the upflow position, it is not necessary to relocate the condensate trap or associated tubing. Refer to Fig. 8 for upflow condensate trap information. Refer to (CONDENSATE DRAIN CONNECTION on p13) for information how to install the condensate drain.

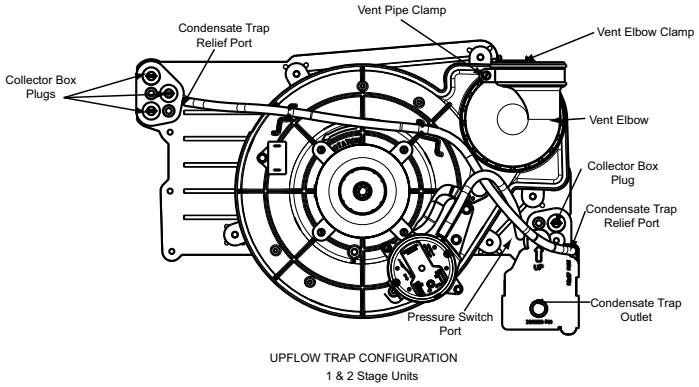

A11307

Fig. 8 – Upflow Trap Configuration (Appearance may vary)

Condensate Trap - Downflow Orientation.

When the furnace is installed in the downflow position, the condensate trap will be initially located at the upper left corner of the collector box, as received from the factory. See the top image in Fig. 9. When the furnace is installed in the downflow orientation, the condensate trap must be relocated for proper condensate drainage. See the bottom image in Fig. 9.

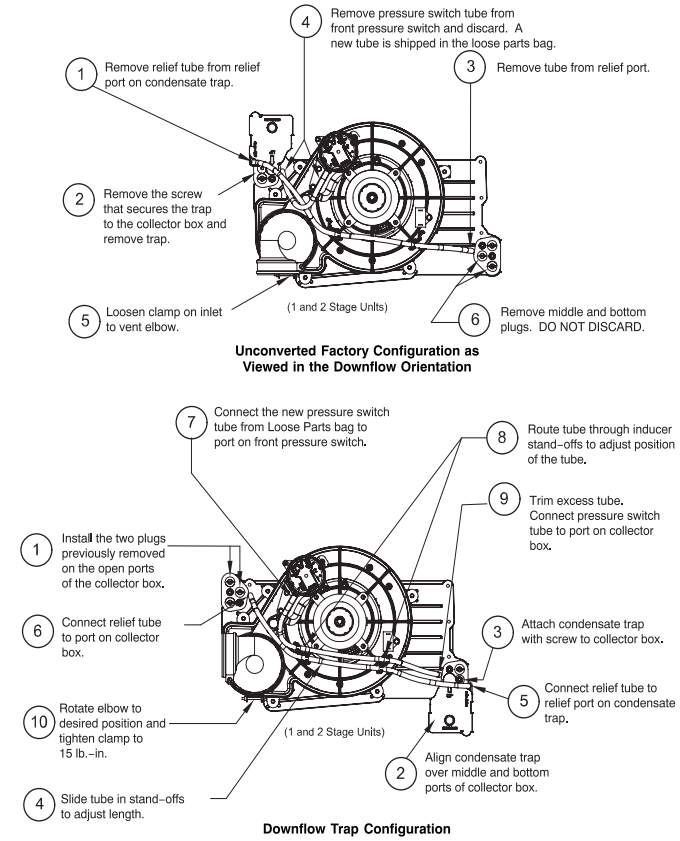

A11587

Fig. 9 – Downflow Trap Configuration (Appearance may vary)

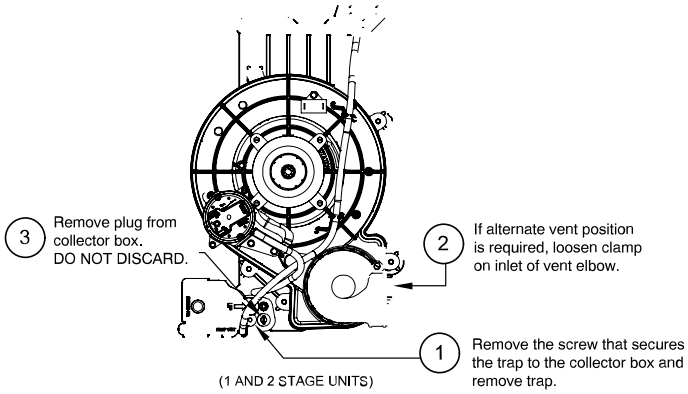

A230046

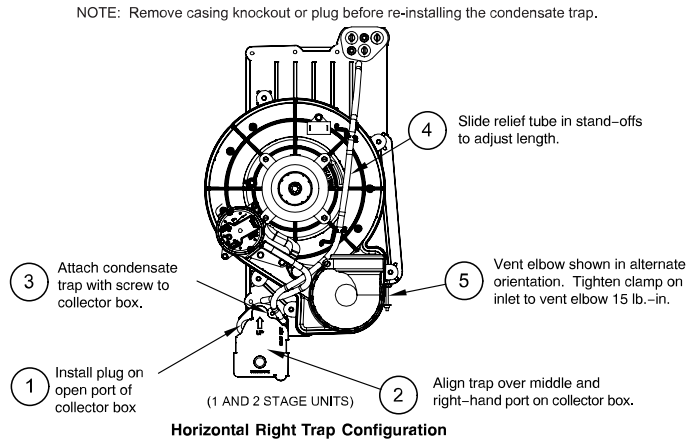

A230047

Fig. 10 – Horizontal Right Trap Configuration (Appearance may vary)

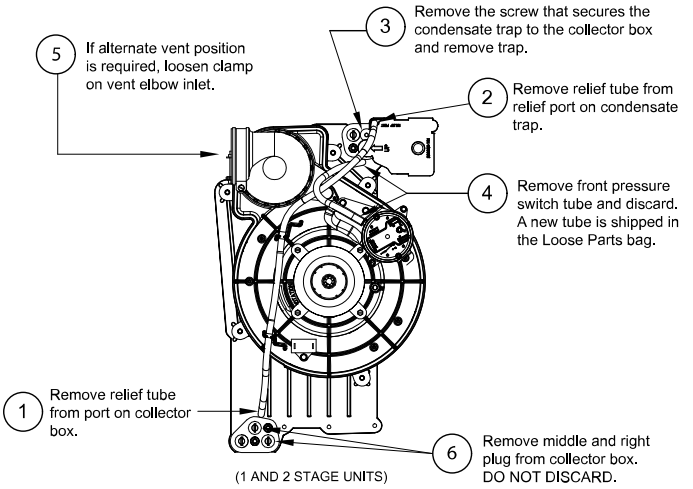

A230048

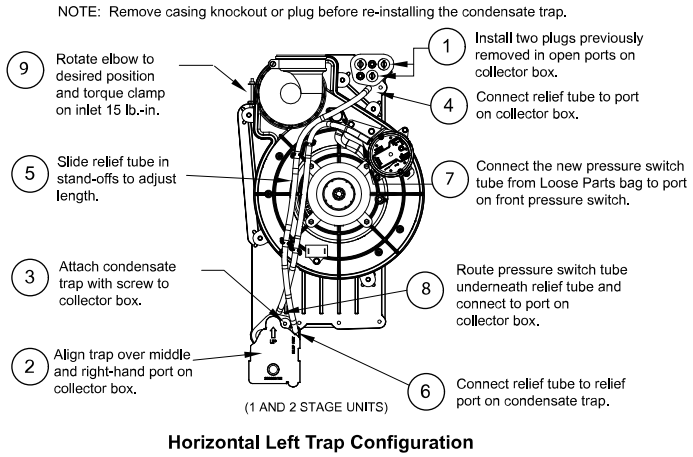

A230049

Fig. 11 – Horizontal Left Configuration (Appearance may vary)

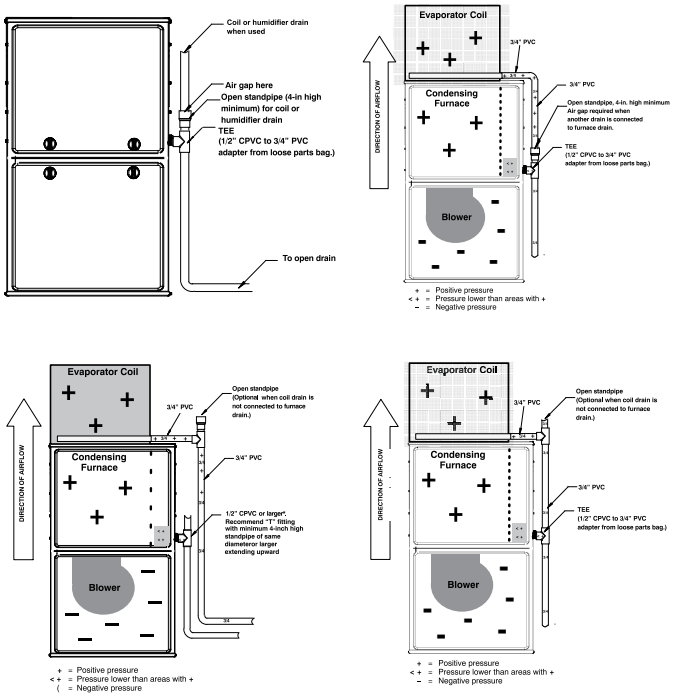

A170135

Fig. 12 – Example of Field Drain Attachment

To Relocate the Condensate Trap:

- Orient the furnace in the downflow position.
- Fig. 9 shows the condensate trap and tubing before and after relocation. Refer to Fig. 9 to begin the trap conversion.
- Refer to CONDENSATE DRAIN CONNECTION on p13 for information how to install the condensate drain.

Condensate Trap - Horizontal Orientation.

When the furnace is installed in the horizontal right position, the condensate trap will be initially located at the bottom of the collector box, as received from the factory. See the top image in Fig. 10. When the furnace is installed in the horizontal left position, the condensate trap will be initially located at the top of the collector box, as received from the factory. See the top image in Fig. 11. In both cases the trap must be repositioned on the collector box for proper condensate drainage. See the bottom images in Fig. 10 and Fig. 11.

A field-supplied, accessory Horizontal Installation Kit (trap grommet) is required for all direct-vent horizontal installations (only). The kit contains a rubber casing grommet designed to seal between the furnace casing and the condensate trap. See Fig. 18.

To Relocate the Condensate Trap:

- Remove the knockout or plug in the casing for the condensate trap.
- Install the grommet in the casing when required for direct-vent horizontal applications.
- Orient the furnace in the desired position.
- Allow for 2 in. (51 mm) of clearance underneath the furnace for the condensate trap and drain line.
- Fig. 10 shows the condensate trap and tubing before and after relocation in the horizontal right position.
- Fig. 11 shows the condensate trap and tubing before and after relocation in the horizontal left position.
- Refer to the appropriate figure to begin the trap conversion.
- Refer to CONDENSATE DRAIN CONNECTION on p13 for information how to install the condensate drain.

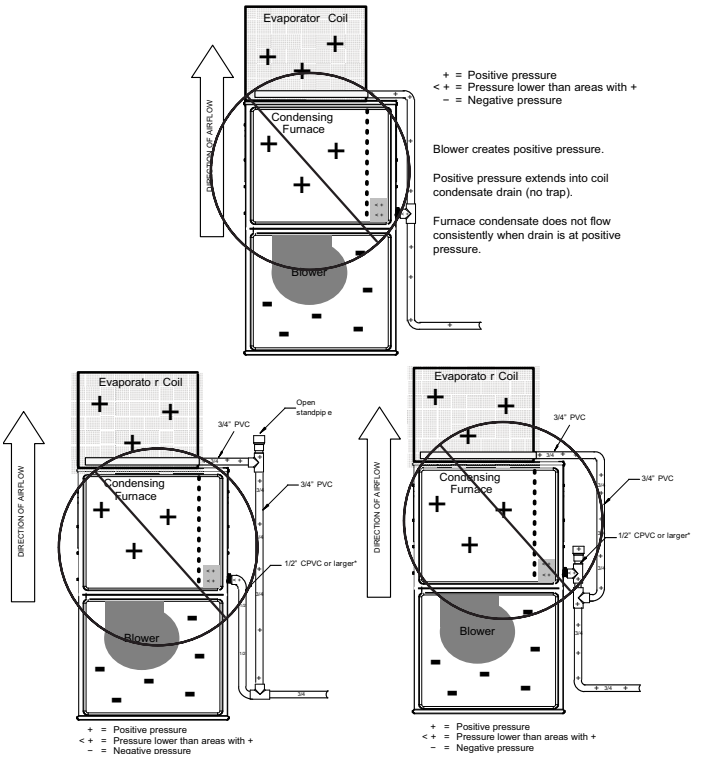

Fig. 13 – Example of Field Drain Attachment (Not Allowed)

NOTICE

The field-supplied, accessory horizontal drain trap grommet is ONLY REQUIRED FOR DIRECT VENT APPLICATIONS. It it NOT required for applications using single-pipe or ventilated combustion air venting.

NOTICE

The condensate trap extends below the side of the casing in the horizontal position. A minimum of 2-in. (51 mm) of clearance is required between the casing side and the furnace platform for the trap to extend out of the casing in the horizontal position. Allow at least 1/4-in. per foot (20 mm per meter) of slope down.

CAUTION

FROZEN AND BURST WATER PIPE HAZARD

Failure to protect against the risk of freezing may result in property damage.

Special precautions MUST be made if installing furnace in an area which may drop below freezing. This can cause improper operation or damage to equipment. If furnace environment has the potential of freezing, the drain trap and drain line must be protected. The use of accessory drain trap heaters, electric heat tape and/or RV antifreeze is required for these installations.

CONDENSATE DRAIN CONNECTION

CAUTION

PROPERTY DAMAGE HAZARD

Failure to follow this caution may result in burst water pipes and/or property damage.

If a condensate pump is installed, a plugged condensate drain or a failed pump may cause the furnace to shut down. Do not leave the home unattended during freezing weather without turning off water supply and draining water pipes or otherwise protecting against the risk of frozen pipes.

DO NOT trap the drain line in any other location than at the condensate drain trap supplied with the furnace. If possible, DO NOT route the drain line where it may freeze. The drain line must terminate at an inside drain to prevent freezing of the condensate and possible property damage.

Special precautions MUST be made if installing furnace in an area which may drop below 32° F (0° C). This can cause improper operation or damage to the equipment. If the furnace environment has the potential of freezing, the drain trap and drain line must be protected. In areas where the temperature may be below 32° F (0° C), a Condensate Freeze Protection kit is required. The kit includes a condensate trap with heat pad and replaces the factory-installed condensate trap. Refer to the Accessory section of the Product Data for current kit number. A self-regulating, shielded and waterproof heat tape rated at 3 to 6 watt per foot (10 to 20 watt per meter) at 115V, 40°F (4°C) may be used to provide freeze protection of the remaining condensate drain line. Wrap the drain trap and drain line with the heat tape and secure with appropriate plastic ties. Follow the heat tape manufacturer's recommendations. Prime the trap before furnace operation.

The condensate drain line must be supported and/or secured per local codes. Supports and clamps should be spaced to prevent the drain line from sagging or being dislocated from the furnace or termination point. In the absence of local codes, consult the current edition of the National Standard Plumbing Code, in the current edition of U.S. or the National Plumbing Code of Canada in Canada.

Upflow/Downflow Orientation

In the Upflow or Downflow orientation, the condensate trap is inside the furnace casing. The condensate drain must be routed from the trap through the furnace casing. The condensate drain can be routed through the left or right side of the casing. (The left or right side is as you are viewing/facing the furnace from the front.)

An indoor coil condensate drain or humidifier drain can be connected to the external furnace condensate drain provided:

- The drains are not hard piped together, and
- There is an air gap at the point where the two drain lines meet or
- All condensate piping is at least 3/4-in. PVC and there is a relief tee at the top of condensate drain piping as shown in Fig. 12.

NOTE: On narrower casings, it may be easier to remove the condensate trap, connect the drain line components and re-install the condensate trap. Read the steps thoroughly to familiarize yourself with the required steps.

For Right Side Condensate Drain:

1. Remove the 7/8-in. knockout or plug from the right side of the casing. See Fig. 15 for suggested knockout or plug removal technique.
2. Remove the pre-formed rubber drain elbow and two spring clamps from the loose parts bag.
3. Slide a spring clamp 1 inch (25 mm) down the plain end (the end without the formed grommet) of the drain elbow.

4. From inside the casing, insert the formed grommet end of the elbow through the 7/8-in. hole in the casing.
5. Pull the grommet through the casing from the outside until it is seated in the hole.
6. Attach the plain end of the drain elbow to the outlet stub on the drain trap. secondure the drain elbow to the trap with the spring clamp.

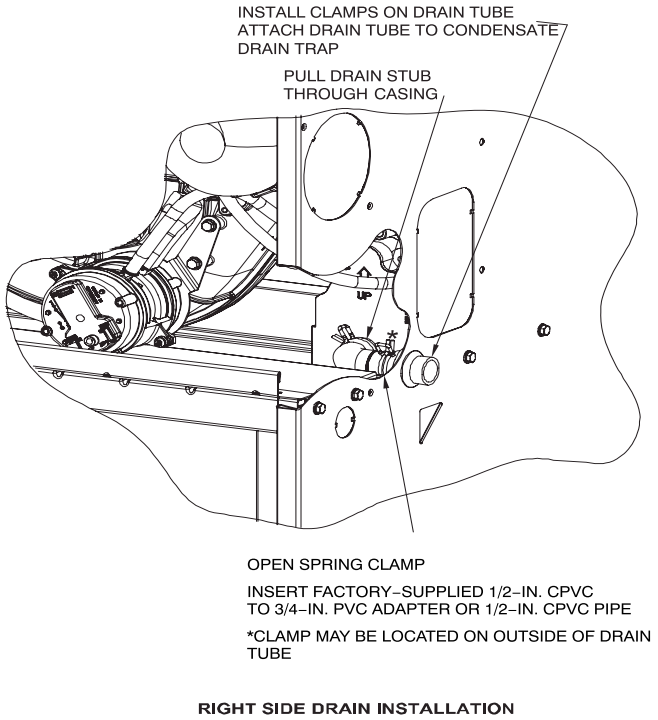

Fig. 14 – Formed Rubber Drain Grommet

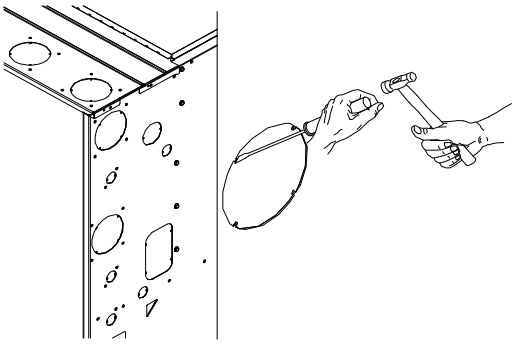

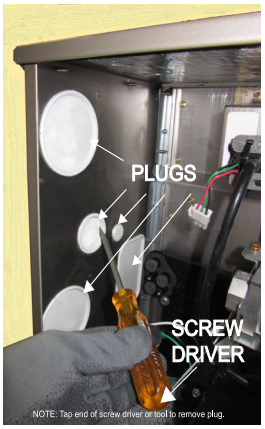

NOTE: Locate the plug that needs to be removed. Using a screw driver or tool, place end against rim on plug. Tap on the butt end of screwdriver or other tool to remove plug.

⚠ CAUTION

CUT HAZARD

Failure to follow this caution may result in personal injury.

Sheet metal parts may have sharp edges or burrs. Use care and wear appropriate protective clothing, safety glasses and gloves when handling parts, and servicing furnaces.

Fig. 15 – Knockout Removal or Plug Removal

The remaining drain line can be constructed from field supplied 1/2-in. CPVC or 3/4-in. PVC pipe, in compliance with local building codes. A factory-supplied 1/2-in. CPVC to 3/4-in. PVC adapter is supplied in the loose parts bag for use as required.

7. Install the adapter or connect the 1/2-in. CPVC pipe by sliding a spring clamp over the open end of the grommet on the outside the furnace casing.
8. Open the spring clamp and insert the long end of the adapter or the 1/2-in. CPVC pipe into the outlet stub on the drain tube.
9. Connect additional condensate piping to a code-approved drain, or to a condensate pump approved for use with acidic furnace condensate and compatible with mineral and vegetable oils, such as canola oil.

Allow at least 1/4-in. per foot (20 mm per meter) of slope down and away from the furnace in horizontal sections of drain line.

TIP FROM CONTRACTORS: Contractors have found that temporarily removing the inducer assembly in upflow applications while performing the steps, below, makes upflow left-side drain connections easier.

For Left Side Condensate Drain Connection:

1. For left side condensate drainage, the drain line is routed from the condensate trap, behind the inducer (upflow) or gas valve (downflow) and out through the left side of the furnace casing. A pre-formed 1/2-in. CPVC “Z-pipe” is provided with the furnace. The Z-pipe is long enough to extend across the casing for drain connections.
2. Locate the Z-pipe. Remove the pre-formed drain elbow and four spring clamps from the loose parts bag.
3. The Z-pipe is connected to the condensate trap and the outside of the furnace by modifying the formed rubber drain elbow as shown in Fig. 17.
4. Remove the formed grommet from the rubber drain elbow by cutting the elbow along the vertical line located about 1-3/8 in. (35 mm) away from the formed grommet. See Fig. 17. DO NOT DISCARD THE FORMED GROMMET OR THE RUBBER ELBOW. Both of these pieces will be used.

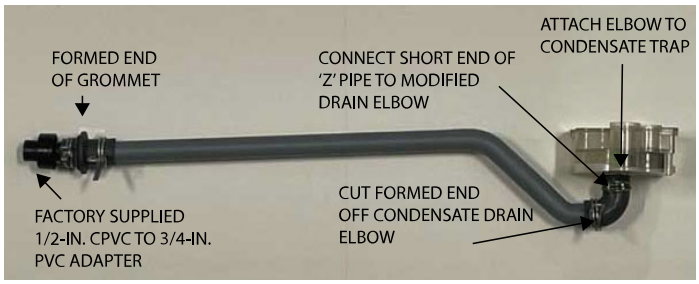

Top View

Drain Elbow "Z" Discharge Pipe for Left Side Drain is Routed behind Inducer

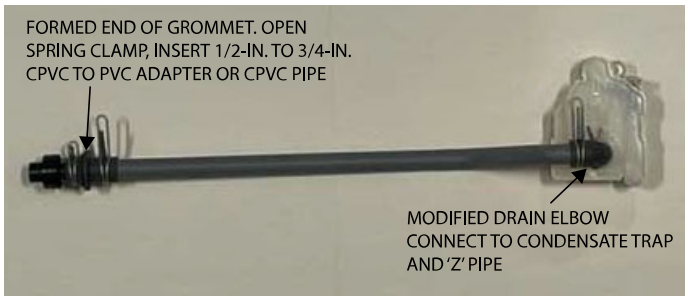

A230060

Front View

Left Side Drain Pipe Orientation for Condensate Discharge

NOTE: Remove Inducer Housing for easier access, if desired.

Fig. 16 – Drain Trap Connection and Routing (Appearance may vary)

Assemble and route the drain line to the opposite side of the furnace as detailed below:

5. Remove the inducer housing screws, disconnect harnesses, and set inducer housing aside. See Fig. 15 for suggested knockout or plug removal technique.
6. Remove condensate trap.
7. Remove 7/8-in. knockout or plug from the left side of the casing. See Fig. 15 for suggested knockout or plug removal technique.
8. Starting from inside the casing, pull the grommet through the hole until it is seated in the hole.
9. Assemble the Z-pipe, rubber elbow and condensate trap external to the unit by seconduring the rubber elbow to the drain trap and the Z-pipe with spring clamps.
10. Slide the spring clamp for the Z-pipe/grommet connection over the Z-tube.
11. Adjust the Z-pipe orientation prior to final installation to ensure the Z-pipe will be as horizontal as possible and **NOT** resting on any sheet metal parts.
12. Align the Z-pipe with the long end of the grommet inside the furnace and insert slightly. The angled end of the tube at the other side of the casing should be facing the front of the furnace.
13. Slide a spring clamp over the end of the remaining rubber drain elbow.
14. Re-attach the condensate trap with Z-pipe assembly. Make fine adjustments to the Z-pipe orientation as needed to ensure the Z-pipe is as horizontal as possible. Condensate trap screws should be torqued to 17.5 ±2.5 in-lbs. Do **NOT** use power tools and torque to a maximum of 20 in-lbs.
15. In both upflow and downflow orientations, the Z-pipe should NOT be resting on any sheet metal parts.
16. Replace inducer housing. Inducer housing screws should be torqued to 17.5 ±2.5 in-lbs. Do **NOT** use power tools and torque to a maximum of 20 in-lbs.

The remaining drain line can be constructed from field supplied 1/2-in. CPVC or 3/4-in. PVC pipe, in compliance with local building codes. A factory-supplied 1/2-in. CPVC to 3/4-in. PVC adapter is supplied in the loose parts bag for use as required.

17. Install the adapter or connect the 1/2-in. CPVC pipe by sliding a spring clamp over the open end of the grommet on the outside the furnace casing.
18. Open the spring clamp and insert the long end of the adapter or the 1/2-in. CPVC pipe into the outlet stub of the grommet.
19. Connect additional condensate piping to a code-approved drain, or to a condensate pump approved for use with acidic furnace condensate and compatible with mineral and vegetable oils, such as canola oil.
20. Allow at least 1/4-in. per foot (20 mm per meter) of slope down and away from the furnace in horizontal sections of drain line.

NOTICE

The field-supplied, accessory horizontal drain trap grommet is ONLY REQUIRED FOR DIRECT VENT APPLICATIONS. It is NOT required for applications using single-pipe or ventilated combustion air venting.

TIP FROM CONTRACTORS: When installing the furnace horizontally, use the entire drain elbow (that is, do NOT cut as shown in Fig. 17 to connect the trap to the drain line. This helps to prevent bumps and shocks to the drain line from damaging the furnace drain trap. Avoid misalignment of the drain pipe which may cause kinks in the elbow.

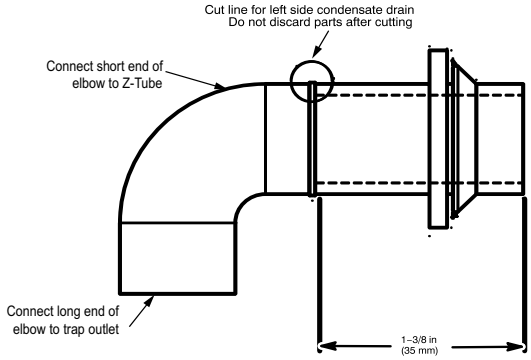

A190401

Fig. 17 – Modify Rubber Drain Elbow

Horizontal Orientation

1. The condensate trap outlet extends 2-in. (51 mm) below the furnace casing. Leave enough clearance between the furnace and the furnace platform for the trap.
2. To allow for servicing the trap, the condensate drain elbow in the loose parts bag can be used to make a coupler to allow for future service of the condensate trap and drain line.
3. Remove the knock-out for the condensate trap in the side of the casing.
4. Install the drain trap grommet in the casing if required for direct-vent applications. If necessary, remove the trap, install the grommet and re-install the trap.
5. Remove the pre-formed rubber drain elbow, and two spring clamps from the loose parts bag.
6. Connect the full or modified elbow and/or grommet to the outlet of the condensate trap with one spring clamp. Avoid misalignment of the drain pipe which may cause kinks in the elbow or grommet.
7. The remaining drain line can be constructed from field-supplied 1/2-in. CPVC or 3/4-in. PVC pipe, in compliance with local building codes. A factory-supplied 1/2-in. CPVC to 3/4-in. PVC adapter is supplied in the loose parts bag for use as required.
8. Install the adapter or connect the 1/2-in. CPVC pipe by sliding a spring clamp over the open end of the elbow or grommet on the outside the furnace casing.
9. Open the spring clamp and insert the long end of the adapter or the 1/2-in. CPVC pipe into the outlet stub on the drain tube.

10. Connect additional condensate piping to a code-approved drain, or to a condensate pump approved for use with acidic furnace condensate and compatible with mineral and vegetable oils, such as Carolan oil.

Allow at least 1/4-in. per foot (20 mm per meter) of slope down and away from the furnace in horizontal sections of drain line.

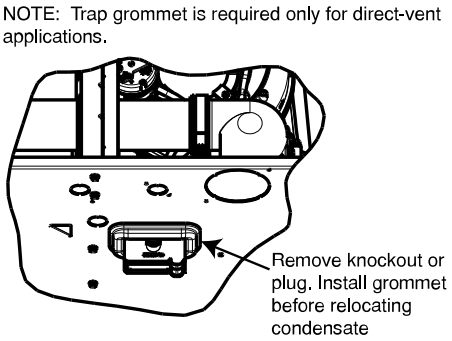

Fig. 18 – Horizontal Drain Trap Grommet

INSTALLATION

NOTICE

This furnace is certified to leak 2% or less of nominal air conditioning CFM delivered when pressurized to 1-in. water column with all present air inlets, including bottom closure in upflow and horizontal applications, air outlets, and plumbing and electrical ports sealed.

Upflow Installation

N Coil Installation

When a 17-1/2-in. wide upflow N coil is used with a 42060B furnace, the N coil must either be raised using a transition piece at least 3-in. (76 mm) high or if a transition piece is not used, the refrigerant lines of the N coil must point to the front of the furnace casing. Factory accessory 4-3/4-in. transitions are available. Refer to the Product Data for the current accessory transition part number.

CAUTION

FURNACE RELIABILITY HAZARD

Failure to follow this caution may result in nuisance limit switch cycling and unit component damage.

When a 17-1/2-in. wide upflow N coil is used with a 42060B furnace, the N coil must either be raised using a transition piece at least 3-in. (76 mm) high or if a transition piece is not used, the refrigerant lines must point to the front of the furnace casing.

NOTE: The furnace must be pitched as shown in Fig. 19 for proper condensate drainage.

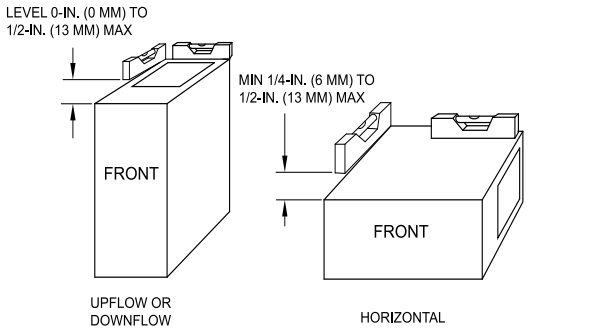

Fig. 19 – Furnace Pitch Requirements

Supply Air Connections

For a furnace not equipped with a cooling coil, the outlet duct shall be provided with a removable access panel. This opening shall be accessible when the furnace is installed and shall be of such a size that the heat exchanger can be viewed for possible openings using light assistance or a probe can be inserted for sampling the air stream. The cover attachment shall prevent leaks.

Connect supply-air duct to flanges on furnace supply-air outlet. Bend flange upward to 90° with wide duct pliers. See Fig. 20. The supply-air duct must be connected to ONLY the furnace supply-outlet-air duct flanges or air conditioning coil casing (when used). DO NOT cut main furnace casing side to attach supply air duct, humidifier, or other accessories. All supply-side accessories MUST be connected to duct external to furnace main casing.

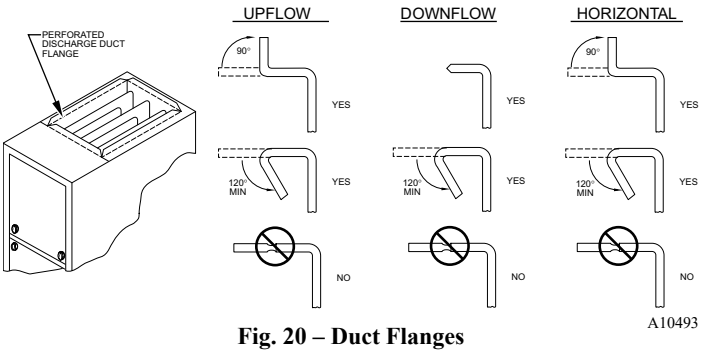

Fig. 20 – Duct Flanges

Return Air Connections

WARNING

FIRE HAZARD

A failure to follow this warning could cause personal injury, death and/or property damage.

Never connect return-air ducts to the back of the furnace. Follow instructions below.

The return-air duct can only be connected to bottom of the furnace. sides (left or right), or a combination of bottom and side(s) of main furnace casing. Bypass humidifier may be attached into unused return air side of the furnace casing. See Fig. 22, Fig. 23, and Fig. 24.

Bottom Return Air Inlet

These furnaces are shipped with bottom closure panel installed in bottom return-air opening. Remove and discard this panel when bottom return air is used. To remove bottom closure panel, see Fig. 24.

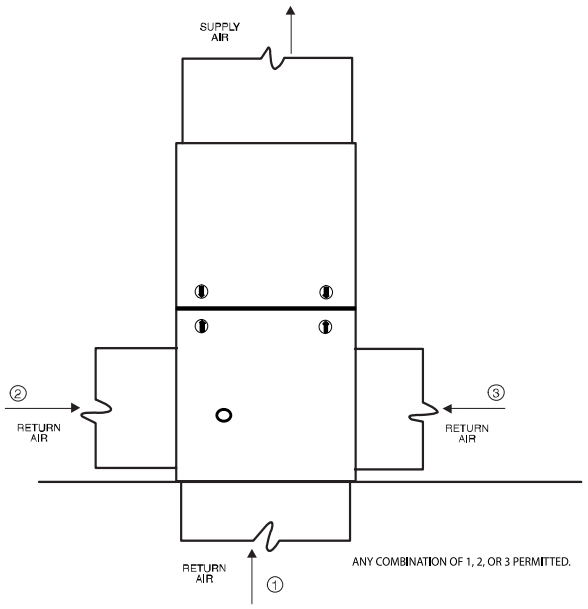

A11036

Fig. 21 – Upflow Return Air Configurations and Restrictions

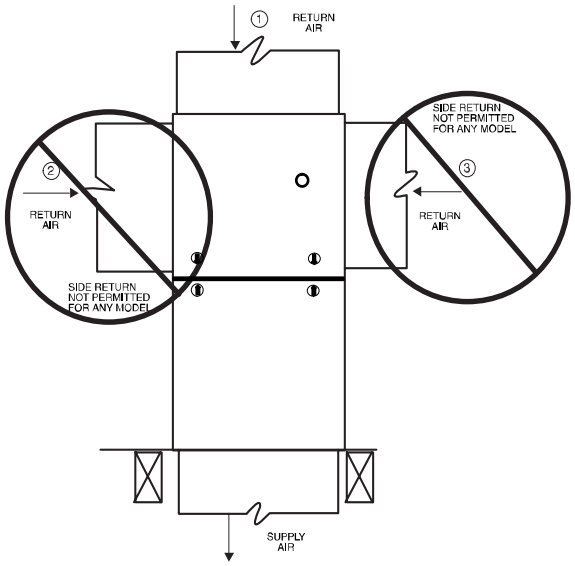

A11037

Fig. 22 – Downflow Return Air Configurations and Restrictions

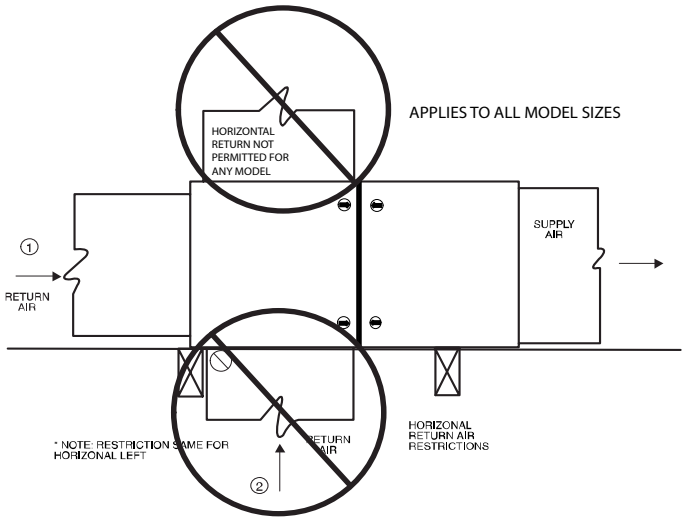

A13109

Fig. 23 – Horizontal Return Air Configurations and Restrictions

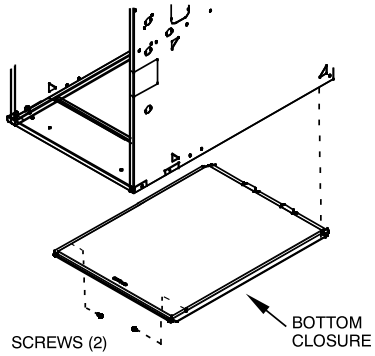

Representative drawing. Models may vary.

1. Lay furnace on the back or side
2. Remove the two (2) screws that secure the bottom closure panel to the furnace casing and remove the panel

A170123

Fig. 24 – Removing Bottom Closure Panel (2 Screws)

Side Return Air Inlet

These furnaces are shipped with bottom closure panel installed in bottom return-air opening. This panel MUST be in place when only side return air is used. Where required by code, seal bottom closure to furnace with tape, mastic or other durable sealing method.

Side return-air openings can only be used in UPFLOW configurations. Do not use side return-air openings in DOWNFLOW or HORIZONTAL configurations. See Fig. 22, Fig. 23, and Fig. 24.

Downflow Installation

⚠ CAUTION

EQUIPMENT OR PROPERTY DAMAGE

Failure to follow this caution could result in equipment or property damage

When furnace is installed in a downflow application, make sure water lines and other sources of water cannot drip or fail in such a way that water can collect on the blower motor, wiring, and furnace control board.

NOTE: The furnace must be pitched as shown in Fig. 19 for proper condensate drainage.

Supply Air Connections

NOTE: For downflow applications, this furnace is approved for use on combustible flooring when any one of the following three accessories are used:

- Manufacturer's approved downflow combustible floor subbase
- Manufacturer's approved cased evaporator coil
- Manufacturer's approved evaporator coil casing

1. Determine application being installed from Table 6.
2. Construct hole in floor per Table 6 and Fig. 25.
3. Construct plenum to dimensions specified in Table 6 and Fig. 25.
4. If downflow subbase is used, install as shown. If manufacturer's cased evaporator coil or coil casing is used, install as shown in Fig. 25.

NOTE: It is recommended that the perforated supply-air duct flanges be completely removed from furnace when installing the furnace on a factory-supplied cased coil or coil box. To remove the supply-air duct flange, use wide duct pliers or hand seamers to bend flange back and forth until it breaks off. Be careful of sharp edges. See Fig. 20.

⚠ CAUTION

CUT HAZARD

Failure to follow this caution may result in personal injury.

Sheet metal parts may have sharp edges or burrs. Use care and wear appropriate protective clothing, safety glasses and gloves when handling parts, and servicing furnaces.

Connect supply-air duct to supply-air outlet on furnace. Bend flange inward past 90° with wide duct pliers See Fig. 20. The supply-air duct must be connected to ONLY the furnace supply outlet or air conditioning coil casing (when used). When installed on combustible material, supply-air duct must be connected to ONLY the factory-approved accessory subbase, or a factory-approved air conditioning coil casing. DO NOT cut main furnace casing to attach supply side air duct, humidifier, or other accessories. All supply-side accessories MUST be connected to duct external to furnace casing.

Return Air Connections

⚠ WARNING

FIRE HAZARD

A failure to follow this warning could cause personal injury, death and/or property damage.

Never connect return-air ducts to the back of the furnace. Follow instructions below.

The return-air duct must be connected to return-air opening (bottom inlet). DO NOT cut into casing sides (left or right). Bypass humidifier connections should be made at ductwork or coil casing sides exterior to furnace. See Fig. 22.

Bottom Return Air Inlet

These furnaces are shipped with bottom closure panel installed in bottom return-air opening. Remove and discard this panel when bottom return air is used. To remove bottom closure panel, see Fig. 24.

Horizontal Installation

NOTE: The furnace must be pitched forward as shown in Fig. 19 for proper condensate drainage.

⚠ WARNING

FIRE, EXPLOSION, AND CARBON MONOXIDE POISONING HAZARD

Failure to follow this warning could result in personal injury, death, or property damage.

Do not install the furnace on its back or hang furnace with control compartment facing downward. Safety control operation will be adversely affected. Never connect return-air ducts to the back of the furnace.

⚠ CAUTION

MINOR PROPERTY HAZARD

Failure to follow this caution may result in minor property damage.

Local codes may require a drain pan under entire furnace and condensate trap when a condensing furnace is used in an attic application or over a finished ceiling.

The furnace can be installed horizontally in an attic or crawlspace on either the left-hand (LH) or right-hand (RH) side. The furnace can be hung from floor joists, rafters or trusses or installed on a non-combustible platform, blocks, bricks or pad.

Supply Air Connections

For a furnace not equipped with a cooling coil, the outlet duct shall be provided with a removable access panel. This opening shall be accessible when the furnace is installed and shall be of such a size that the heat exchanger can be viewed for possible openings using light assistance or a probe can be inserted for sampling the air stream. The cover attachment shall prevent leaks.

Connect supply-air duct to flanges on furnace supply-air outlet. Bend flange upward to 90° with wide duct pliers. See Fig. 20. The supply-air duct must be connected to ONLY the furnace supply-outlet-air duct flanges or air conditioning coil casing (when used). DO NOT cut main furnace casing side to attach supply air duct, humidifier, or other accessories. All supply-side accessories MUST be connected to duct external to furnace main casing.

Return Air Connections

⚠ CAUTION

FURNACE RELIABILITY HAZARD

Failure to follow this caution may result in unit component damage.

Return air connections to either side of the furnace in the horizontal position can result in nuisance limit switch tripping. Use only the factory bottom opening of the furnace for the return air connection.

The return-air duct can only be connected to bottom of the furnace. The sides of casing cannot be used for return air connection. See Fig. 23.

Bottom Return Air Inlet

These furnaces are shipped with bottom closure panel installed in bottom return-air opening. Remove and discard this panel when bottom return air is used. To remove bottom closure panel, see Fig. 24.

Side Return Air Inlet

These furnaces are shipped with bottom closure panel installed in bottom return-air opening. This panel MUST be in place when side return air inlet(s) are used without a bottom return air inlet.

Not all horizontal furnaces are approved for side return air connections See Fig. 23. Where required by code, seal bottom closure to furnace with tape, mastic, or other durable sealing method.

Table 6 – Opening Dimensions - In. (mm)

FURNACE CASING WIDTH IN. (mm)	APPLICATION	PLENUM OPENING		FLOOR OPENING	
		A	B	C	D
14–3/16* (360)	Upflow Applications on Combustible or Noncombustible Flooring (subbase not required)	12-11/16 (322)	21-5/8 (549)	13-5/16 (338)	22-1/4 (565)
	Downflow Applications on Noncombustible Flooring (subbase not required)	12-9/16 (319)	19 (483)	13-3/16 (335)	19-5/8 (498)
	Downflow applications on combustible flooring (subbase required)	11-13/16 (300)	19 (483)	13-7/16 (341)	20-5/8 (524)
	Downflow Applications on Combustible Flooring with coil assembly or coil box (subbase not required)	12-5/16 (313)	19 (483)	13-5/16 (338)	20 (508)

Table 6 – Opening Dimensions - In. (mm) (Continued)

FURNACE CASING WIDTH IN. (mm)	APPLICATION	PLENUM OPENING		FLOOR OPENING	
		A	B	C	D
17–1/2 (445)	Upflow Applications on Combustible or Noncombustible Flooring (subbase not required)	16 (406)	21-5/8 (549)	16-5/8 (422)	22-1/4 (565)
	Downflow Applications on Noncombustible Flooring (subbase not required)	15-7/8 (403)	19 (483)	16-1/2 (419)	19-5/8 (498)
	Downflow applications on combustible flooring (subbase required)	15-1/8 (384)	19 (483)	16-3/4 (425)	20-5/8 (524)
	Downflow Applications on Combustible Flooring with coil assembly or coil box (subbase not required)	15-1/2 (394)	19 (483)	16-1/2 (419)	20 (508)
21 (533)	Upflow Applications on Combustible or Noncombustible Flooring (subbase not required)	19-1/2 (495)	21-5/8 (549)	20-1/8 (511)	22-1/4 (565)
	Downflow Applications on Noncombustible Flooring (subbase not required)	19-3/8 (492)	19 (483)	20 (508)	19-5/8 (498)
	Downflow applications on combustible flooring (subbase required)	18-5/8 (473)	19 (483)	20-1/4 (514)	20-5/8 (524)
	Downflow Applications on Combustible Flooring with coil assembly or coil box (subbase not required)	19 (483)	19 (483)	20 (508)	20 (508)
24-1/2 (622)	Upflow Applications on Combustible or Noncombustible Flooring (subbase not required)	23 (584)	21-5/8 (549)	23-5/8 (600)	22-1/4 (565)
	Downflow Applications on Noncombustible Flooring (subbase not required)	22-7/8 (581)	19 (483)	23-1/2 (597)	19-5/8 (498)
	Downflow applications on Combustible flooring (subbase required)	22-1/8 (562)	19 (483)	23-3/4 (603)	20-5/8 (524)
	Downflow Applications on Combustible Flooring with coil assembly or coil box (subbase not required)	22-1/2 (572)	19 (483)	23-1/2 (597)	20 (508)

*. Not all families have these models

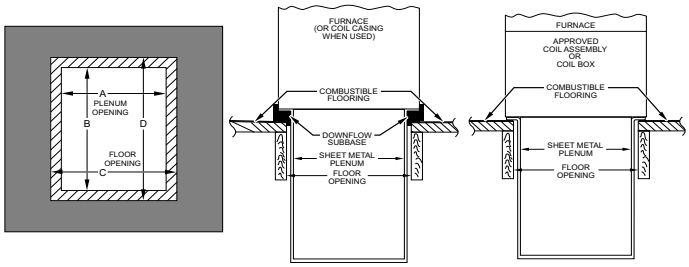

A10491

Fig. 25 – Installation on Combustible Flooring

FILTER ARRANGEMENT

WARNING

FIRE, CARBON MONOXIDE AND POISONING HAZARD

Failure to follow this warning could result in fire, personal injury or death.

Never operate a furnace without a filter or filtration device installed. Never operate a furnace with filter or filtration device access doors removed.

TIP FROM CONTRACTORS: Install a media cabinet capable of incorporating a 4-in (102 mm) thick media filter. This allows room for future upgrades to other IAQ devices.

The furnace may be used with an optional external media filter cabinet. The optional media filter cabinet uses either a standard 1-in. (25 mm) filter or 4-in. (102 mm) wide media filter which can be purchased separately. A field supplied accessory air cleaner may also be used in place of the media cabinet.

The optional media cabinet is sized for bottom return applications for use in upflow, downflow and horizontal applications. A 16-in. (406 mm) media cabinet may be used with the 14-3/16-in. (360 mm) furnace and includes block-off plates.

For upflow side return applications, the optional media cabinet (or field supplied accessory air cleaner) can be installed on the side of the furnace or side and bottom when a bottom plenum is used. See Fig. 26 and Fig. 21.

For downflow applications, the optional media cabinet (or field supplied accessory air cleaner) must only be connected to the bottom opening on the furnace. See Fig. 26 and Fig. 22.

For horizontal applications, the optional media cabinet (or field supplied accessory air cleaner) for all models can be connected to the bottom opening on the furnace. For side return use in the horizontal position, refer to Fig. 23. If both side and bottom openings are used in Fig. 23, each opening used will require an optional filter.

The optional media cabinet (or field supplied accessory air cleaner) can also be installed in the common return duct prior to entering the return air opening in any orientation.

Refer to the instructions supplied with Media Cabinet or accessory air filter for assembly and other details. See Table 7 for filter size details.

Filter and Return Duct Sizing

Pressure drop must be taken into account when sizing filters, filter racks, IAQ devices, and associated system ductwork. See for a comparison of Pressure Drop (initial/clean resistance to airflow) versus Airflow for a variety of filter media types and sizes. These are representative numbers. Consult the filter or IAQ device manufacturers' specification sheet for performance data for a particular filter media or IAQ device.

Design the filter and associated ductwork for the best match of pressure drop versus filter size. Best practice usually chooses filter systems with pressure drops under 0.2 in. w.c. (50 Pa), with the best blower electrical efficiency and system airflow performance occurring with filter pressure drops under 0.1 in. w.c. (25 Pa).

Due to the relatively high pressure drops of 1-in. (25 mm) thick after-market filter media, it is recommended that the filtration system be designed for at least 2-in. (51 mm) thick media.

NOTICE

Design the duct system FIRST to determine how much pressure drop may be allowed in the filter system. See AIR DUCTS on p23. Excessive filter pressure drop often compromises system airflow and duct performance, causes inadequate airflow to the furthest ends of the duct system, as well as causes excess noise and higher than anticipated electrical consumption.

Provide duct transitions, as required, to smoothly transition airflow from the return duct system to the filter (or IAQ device) to the furnace when the dimensions of the ductwork or furnace return air opening do not match the required filter or IAQ device dimensions. See the instructions supplied with factory-accessory duct adapters.

Table 7 – Filter Media Pressure Drop (Clean) Versus Airflow - in. w.c. (Pa)

14 x 25 Filter (356 x 635 mm)		Factory-Accessory Washable		Factory-Accessory Media*		Representative After-Market Filter Media*							
						Fiberglass*				Pleated*			
CFM	L/s	(1-in. / 2.5 cm)		(4-in. / 10 cm)		(1-in. / 2.5 cm)		(2-in. / 5 cm)		(1-in. / 2.5 cm)		(2-in. / 5 cm)	
600	(283)	0.04	(12)	0.05	(12)	0.07	(17)	0.10	(26)	0.24	(60)	0.16	(40)
800	(378)	0.06	(15)	0.07	(19)	0.10	(25)	0.15	(39)	0.34	(85)	0.23	(59)
1000	(472)	0.07	(18)	0.10	(27)	0.13	(34)	0.21	(52)	-	-	0.32	(81)
1200	(566)	0.08	(20)	0.14	(36)	0.17	(43)	0.27	(68)	-	-	-	-
16 x 25 Filter (406 x 635 mm)		**Factory-Accessory Washable**		**Factory-Accessory Media***		**Representative After-Market Filter Media***							
						Fiberglass*				**Pleated***			
CFM	**L/s**	**(1-in. / 2.5 cm)**		**(4-in. / 10 cm)**		**(1-in. / 2.5 cm)**		**(2-in. / 5 cm)**		**(1-in. / 2.5 cm)**		**(2-in. / 5 cm)**	
600	(283)	0.04	(10)	0.05	(13)	0.06	(15)	0.09	(22)	0.20	(51)	0.13	(34)
800	(378)	0.05	(13)	0.07	(18)	0.08	(21)	0.13	(32)	0.29	(72)	0.20	(49)
1000	(472)	0.06	(16)	0.11	(28)	0.11	(28)	0.17	(43)	-	-	0.27	(67)
1200	(566)	0.07	(18)	0.15	(37)	0.14	(36)	0.22	(56)	-	-	-	-
1400	(661)	0.08	(21)	0.19	(48)	0.18	(45)	0.28	(70)	-	-	-	-
1600	(755)	0.09	(23)	0.24	(60)	0.21	(54)	-	-	-	-	-	-
1800	(850)	0.10	(25)	-	-	0.26	(64)	-	-	-	-	-	-
20 x 25 Filter (508 x 635 mm)		**Factory-Accessory Washable**		**Factory-Accessory Media***		**Representative After-Market Filter Media***							
						Fiberglass*				**Pleated***			
CFM	**(L/s)**	**(1-in. / 2.5 cm)**		**(4-in. / 10 cm)**		**(1-in. / 2.5 cm)**		**(2-in. / 5 cm)**		**(1-in. / 2.5 cm)**		**(2-in. / 5 cm)**	
800	(378)	0.04	(11)	0.05	(12)	0.06	(16)	0.09	(24)	0.22	(55)	0.15	(37)
1000	(472)	0.05	(13)	0.07	(18)	0.08	(21)	0.13	(32)	0.29	(72)	0.20	(49)
1200	(566)	0.06	(15)	0.09	(22)	0.11	(27)	0.16	(41)	-	-	0.25	(63)
1400	(661)	0.07	(17)	0.12	(31)	0.13	(33)	0.20	(51)	-	-	0.31	(79)
1600	(755)	0.08	(19)	0.15	(38)	0.16	(40)	0.24	(61)	-	-	-	-
1800	(850)	0.08	(21)	0.18	(47)	0.18	(47)	0.29	(73)	-	-	-	-
2000	(944)	0.09	(23)	0.22	(56)	0.21	(54)	-	-	-	-	-	-
2200	(1038)	0.09	(24)	0.26	(66)	0.25	(62)	-	-	-	-	-	-
25 x 25 Filter (635 x 635 mm)		**Factory-Accessory Washable**		**Factory-Accessory Media***		**Representative After-Market Filter Media***							
						Fiberglass*				**Pleated***			
CFM	**L/s**	**(1-in. / 2.5 cm)**		**(4-in. / 10 cm)**		**(1-in. / 2.5 cm)**		**(2-in. / 5 cm)**		**(1-in. / 2.5 cm)**		**(2-in. / 5 cm)**	
800	(378)	0.03	(9)	0.03	(8)	0.05	(12)	0.07	(18)	0.17	(43)	0.11	(28)
1000	(472)	0.04	(11)	0.05	(12)	0.06	(16)	0.09	(24)	0.22	(55)	0.15	(37)
1200	(566)	0.05	(13)	0.07	(17)	0.08	(20)	0.12	(31)	0.27	(68)	0.18	(47)
1400	(661)	0.06	(15)	0.09	(23)	0.10	(24)	0.15	(38)	-	-	0.23	(58)
1600	(755)	0.06	(16)	0.12	(31)	0.11	(29)	0.18	(45)	-	-	0.28	(69)
1800	(850)	0.07	(18)	0.14	(35)	0.13	(34)	0.21	(53)	-	-	-	-
2000	(944)	0.08	(19)	0.16	(41)	0.16	(39)	0.24	(61)	-	-	-	-
2200	(1038)	0.08	(21)	0.19	(49)	0.18	(45)	0.28	(70)	-	-	-	-

*. Representative estimates from filter manufacturer data sheets. See manufacturers' specifications for pressure drop versus airflow data for specific filter media.

If the filter size that you are looking for is not contained in Table 7, refer to Table 8 for a comparison of Pressure Drop (initial/clean resistance to airflow) versus Face Velocity for a variety of filter media types.

The following equations relate Face Velocity (FPM), Filter Area and Airflow (CFM):

Filter Face Velocity = Airflow / Filter Area

Minimum Filter Area = Rated System Airflow / Maximum Filter Face Velocity

Table 8 – Filter Media Pressure Drop (Clean) Versus Face Velocity- in. w.c. (Pa)

Face Velocity		Factory-Accessory Washable		Representative After-Market Filter Media*							
				Fiberglass				Pleated*			
FPM	(m/s)	(1-in. / 2.5 cm)		(1-in. / 2.5 cm)		(2-in. / 5 cm)		(1-in. / 2.5 cm)		(2-in. / 5 cm)	
200	(1)	0.04	(10)	0.05	(13)	0.08	(20)	0.18	(47)	0.12	(31)
300	(1.5)	0.05	(14)	0.09	(22)	0.13	(34)	0.30	(75)	0.21	(52)
400	(2)	0.07	(17)	0.13	(32)	0.20	(50)	-	-	0.31	(78)
500	(2.5)	0.08	(21)	0.18	(44)	0.27	(69)	-	-	-	-
600	(3)	0.09	(23)	0.23	-	-	-	-	-	-	-
700	(3.6)	0.10	(26)	0.29	-	-	-	-	-	-	-

*. Representative estimates from filter manufacturer data sheets. See manufacturers' specifications for pressure drop versus airflow data for specific filter media.

See Table 9 for filter size details.

Table 9 – Air Filter Selection and Duct Sizing - In. (mm)

FURNACE CASING WIDTH*	FILTER SIZE		FILTER TYPE†
	SIDE RETURN	BOTTOM RETURN	
14-3/16 (360)	16 x 25 x 3/4 (406 x 635 x 19)	14 x 25 x 3/4 (356 x 635 x 19)	Washable
17-1/2 (445)	16 x 25 x 3/4 (406 x 635 x 19)	16 x 25 x 3/4 (406 x 635 x 19)	Washable
21 (533)	16 x 25 x 3/4 (406 x 635 x 19)	20 x 25 x 3/4 (508 x 635 x 19)	Washable
24-1/2 (622)	16 x 25 x 3/4 (406 x 635 x 19)	24 x 25 x 3/4 (610 x 635 x 19)	Washable

*. Not all families have these models
†. Recommended to maintain air filter face velocity. See Product Data for part number

Table 10 – Air Filter Located in Filter Cabinet

FILTER CABINET HEIGHT - IN (MM)	FILTER SIZE - IN (MM)*	FILTER TYPE†
16 (406)	(1) 16 x 25 x 3/4 (406 x 635 x 19) or (1) 16 x 25 x 4-5/16 (406 x 635 x 110)	Washable or Media
20 (508)	(1) 20 x 25 x 3/4* (508 x 635 x 19) or (1) 20 x 25 x 4-5/16 (508 x 635 x 110)	Washable or Media*
24 (610)	(1) 24 x 25 x 3/4* (610 x 635 x 19) or (1) 24 x 25 x 4-5/16 (610 x 635 x 110)	Washable or Media*

*. Filters with a side return-air may have a different filter size. Measure the filter to obtain the correct size.
†. Recommended to maintain air filter face velocity. See Product Data for part number.

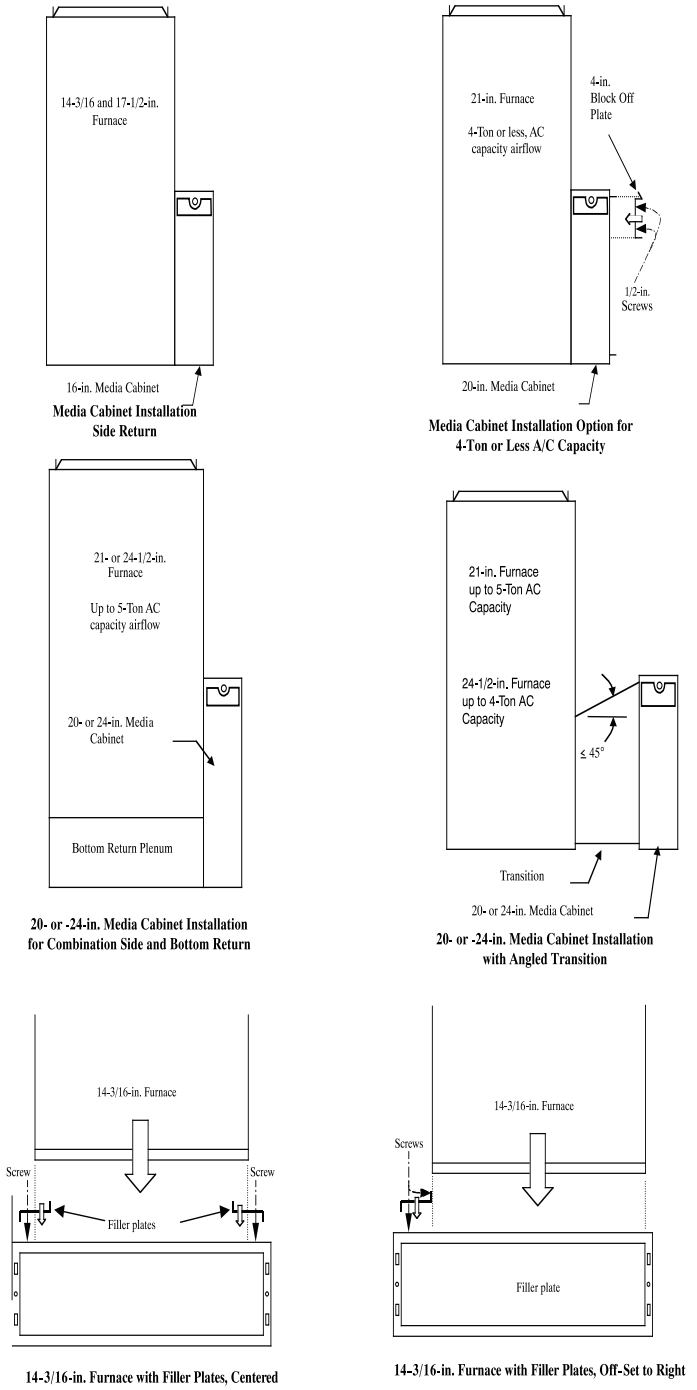

Fig. 26 – Optional Media Cabinet Accessory

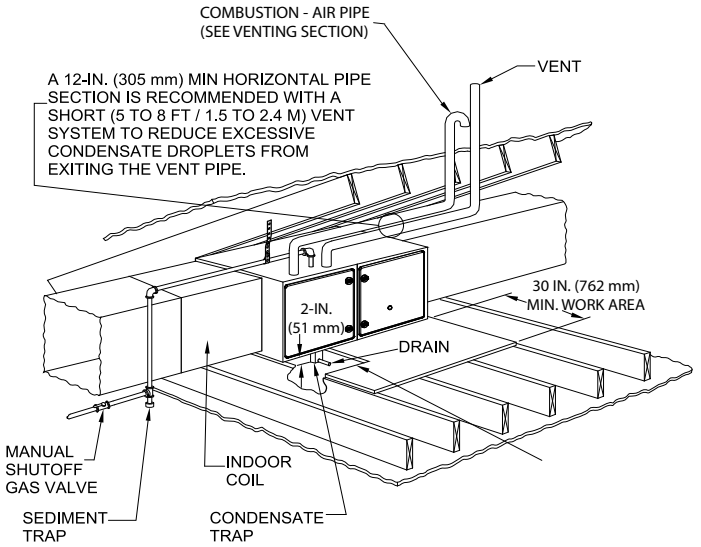

ROLLOUT PROTECTION REQUIRED

Install 12″ x 22″ (305x559 mm) sheet metal in front of burner compartment area. The sheet metal MUST extend underneath the furnace casing by 1-in. (25 mm) with the door removed. The bottom closure panel may be used for flame roll-out protection when bottom of furnace is used for return air connection.

NOTE: FURNACE SHOWN AS DIRECT VENT APPLICATION. REFER TO THE VENTING SECTION FOR ALLOWABLE VENT CONFIGURATIONS

A150580

NOTE: Local codes may require a drain pan and condensate trap when a condensing furnace is installed over a finished ceiling.

Fig. 27 – Working Platform for Attic Installation

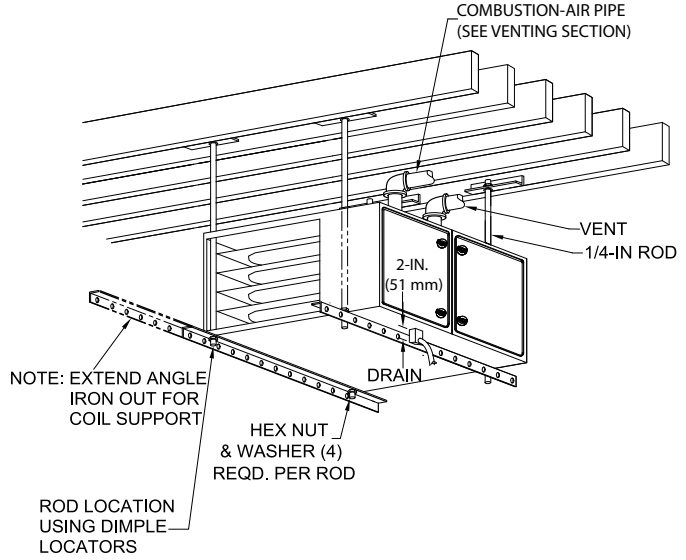

ROLLOUT PROTECTION REQUIRED

Install 12″ x 22″ (204 x 559 mm) sheet metal in front of and above the burner compartment area. The sheet metal MUST extend above the furnace casing by 1-in. (25 mm with the door removed. A 1-in. (25 mm) clearance minimum between top of furnace and combustible material is required. The entire length of furnace must be supported when furnace is used in horizontal position to ensure proper drainage.

NOTE: FURNACE SHOWN IS A DIRECT-VENT APPLICATION. REFER TO THE VENTING SECTION FOR ALLOWABLE VENT CONFIGURATIONS.

A150581

NOTE: Local codes may require a drain pan and condensate trap when a condensing furnace is installed over a finished ceiling.

Fig. 28 – Suspended Furnace Installation

Leveling Legs (If Desired)

In upflow position with side return inlet(s), leveling legs may be used. See Fig. 29. Install field-supplied, 5/16 x 1-1/2 in. (8 x 38 mm) (max) corrosion-resistant machine bolts, washers and nuts.

NOTE: Bottom closure must be used when leveling legs are used. It may be necessary to remove and reinstall bottom closure panel to install leveling legs. To remove bottom closure panel, see Fig. 24.

To install leveling legs:

1. Position furnace on its back. Locate and drill a hole in each bottom corner of furnace.
2. For each leg, install nut on bolt and then install bolt with nut in hole. (Install flat washer if desired.)
3. Install another nut on other side of furnace base. (Install flat washer if desired.)
4. Adjust outside nut to provide desired height, and tighten inside nut to secondure arrangement.
5. Reinstall bottom closure panel if removed.

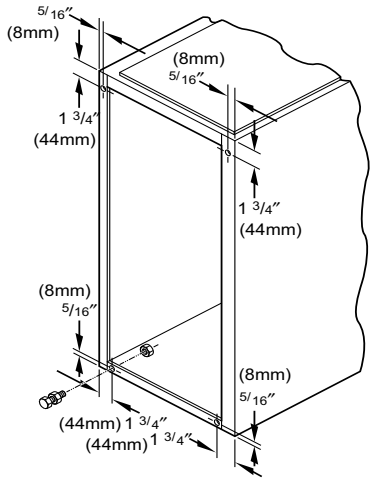

A89014

Fig. 29 – Leveling Legs

Location Relative to Cooling Equipment

The cooling coil must be installed parallel with, or on the downstream side of the unit to avoid condensation in the heat exchangers. When installed parallel with the furnace, dampers or other flow control must prevent chilled air from entering the furnace. If the dampers are manually operated, they must be equipped with means to prevent operation of either unit unless the damper is in the full-heat or full-cool position.

Platform Furnace Support

Construct working platform at location where all required furnace clearances are met. See Table 2 and Fig. 27. For furnaces with 1-in. (25 mm) clearance requirement on side, set furnace on non-combustible blocks, bricks or angle iron. For crawlspace installations, if the furnace is not suspended from the floor joists, the ground underneath furnace must be level and the furnace set on blocks or bricks.

Suspended Furnace Support

The furnace must be supported under the entire length of the furnace with threaded rod and angle iron. See Fig. 28. secure angle iron to bottom of furnace as shown.

Roll-Out Protection

Provide a minimum 12-in. x 22-in. (305 x 559 mm) piece of sheet metal for flame roll-out protection in front of burner area for furnaces closer than 12-in. (305 mm) above the combustible deck or suspended furnaces closer than 12-in. (305 mm) to joists. The sheet metal MUST extend underneath the furnace casing by 1-in. (25 mm) with the door removed.

The bottom closure panel on furnaces of widths 17-1/2-in. (445 mm) and larger may be used for flame roll-out protection when bottom of furnace is used for return air connection. See Fig. 27 for proper orientation of roll-out shield.

AIR DUCTS

NOTICE

Many states, provinces and localities are considering or have implemented standards and/or restrictions on duct sizing practices, ductwork leakage, and/or ductwork thermal, airflow and electrical efficiencies. CONSULT LOCAL CODE OFFICIALS for ductwork design and performance requirements in your area.

General Requirements

The duct system should be designed and sized according to accepted national standards such as those published by: Air Conditioning Contractors Association (ACCA Manual D), Sheet Metal and Air Conditioning Contractors National Association (SMACNA) or American Society of Heating, Refrigerating and Air Conditioning Engineers (ASHRAE) or consult The Air Systems Design Guidelines reference tables available from your local distributor. The duct system should be sized to handle the required system design CFM at the design external static pressure. The furnace airflow rates are provided in Table 19-Air Delivery-CFM (With Filter). When a furnace is installed so that the supply ducts carry air circulated by the furnace to areas outside the space containing the furnace, the return air shall also be handled by duct(s) sealed to the furnace casing and terminating outside the space containing the furnace.

secondure ductwork with proper fasteners for type of ductwork used. Seal supply- and return-duct connections to furnace with code approved tape or duct sealer.

NOTE: Flexible connections should be used between ductwork and furnace to prevent transmission of vibration.

Ductwork passing through unconditioned space should be insulated to enhance system performance. When air conditioning is used, a vapor barrier is recommended.

Maintain a 1-in. (25 mm) clearance from combustible materials to supply air ductwork for a distance of 36-in. (914 mm) horizontally from the furnace. See NFPA 90B or local code for further requirements.

Return Duct Sizing

Refer to FILTER ARRANGEMENT on p19 and Table 9 for information on the proper selection of filter sizes and the associated ductwork and duct transitions. Improperly designed filtering systems and return ductwork are the most common causes of airflow and/or noise complaints in HVAC systems.

Ductwork Acoustical Treatment

NOTE: Metal duct systems that do not have a 90 degree elbow and 10 ft. (3 M) of main duct to the first branch take-off may require internal acoustical lining. As an alternative, fibrous ductwork may be used if constructed and installed in accordance with the latest edition of SMACNA construction standard on fibrous glass ducts. Both acoustical lining and fibrous ductwork shall comply with NFPA 90B as tested by UL Standard 181 for Class 1 Rigid air ducts.

NOTE: For horizontal applications, the top most flange may be bent past 90° to allow the evaporator coil to hang on the flange temporarily while the remaining attachment and sealing of the coil are performed.

GAS PIPING

WARNING

FIRE OR EXPLOSION HAZARD

Failure to follow this warning could result in personal injury, death, and/or property damage.

Never purge a gas line into a combustion chamber. Never test for gas leaks with an open flame. Use a commercially available soap solution made specifically for the detection of leaks to check all connections. A fire or explosion may result causing property damage, personal injury or loss of life.

WARNING

FIRE OR EXPLOSION HAZARD

Failure to follow this warning could result in personal injury, death, and/or property damage.

Use proper length of pipe to avoid stress on gas control manifold and gas valve.

WARNING

FIRE OR EXPLOSION HAZARD

Gas valve inlet and/or inlet pipe must remain capped until gas supply line is permanently installed to protect the valve from moisture and debris. Also, install a sediment trap in the gas supply piping at the inlet to the gas valve.

Gas piping must be installed in accordance with national and local codes. Refer to current edition of NFPA 54/ANSI Z223 in the U.S.A. Refer to current edition of NSCNGPIC in Canada.

Installations must be made in accordance with all authorities having jurisdiction. If possible, the gas supply line should be a separate line running directly from meter to furnace.

NOTE: Use a back-up wrench on the inlet of the gas valve when connecting the gas line to the gas valve.

CAUTION

FURNACE DAMAGE HAZARD

Failure to follow this caution may result in furnace damage.

Connect gas pipe to furnace using a backup wrench to avoid damaging gas controls and burner misalignment.

NOTICE

In the state of Massachusetts:

1. Gas supply connections MUST be performed by a licensed plumber or gas fitter.
2. When flexible connectors are used, the maximum length shall not exceed 36 in. (915 mm).
3. When lever handle type manual equipment shutoff valves are used, they shall be T-handle valves.
4. The use of copper tubing for gas piping is NOT approved by the state of Massachusetts.

The gas supply pressure shall be within the maximum and minimum inlet supply pressures marked on the rating plate with the furnace burners ON and OFF.

Gas entry can be from left or right side, or top panel. See Fig. 30 and Fig. 31.

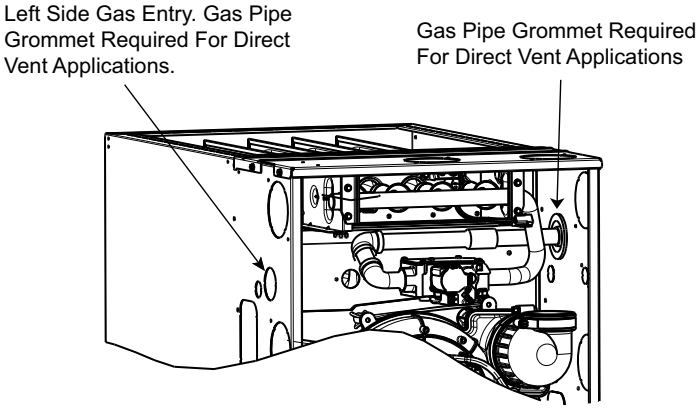

Fig. 30 – Gas Entry

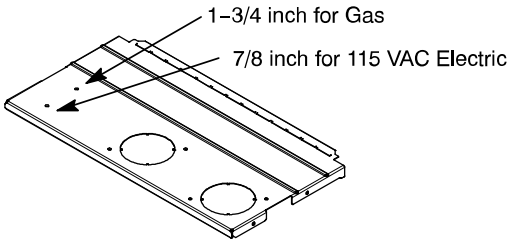

Fig. 31 – Alternate Gas and Electric Entry

NOTE: Top plate may be field drilled for alternate gas and 115 VAC electric entry.

Refer to Table 11 for recommended gas pipe sizing. Risers must be used to connect to furnace and to meter. Support all gas piping with appropriate straps, hangers, etc. Use a minimum of one hanger every 6 ft. (2 M). Joint compound (pipe dope) should be applied sparingly and only to male threads of joints. Pipe dope must be resistant to the action of propane gas.

Table 11 – Maximum Capacity of Pipe

Nominal:	1/2 (12.7)	3/4 (19.0)	1 (25.4)	1-1/4 (31.8)	1-1/2 (38.1)
Actual ID:	**0.622**	**0.824**	**1.049**	**1.380**	**1.610**
Length (ft)	**Capacity in Cubic Feet of Gravity**				
10 (3.0)	172	360	678	1390	2090
20 (6.0)	118	247	466	957	1430
30 (9.1)	95	199	374	768	1150
40 (12.1)	81	170	320	657	985
50 (15.2)	72	151	284	583	873

NOTE: Cubic ft. of natural gas per hr for gas pressures of 0.5 psig (14-in. w.c.) or less and a pressure drop of 0.5-in. w.c. (based on a 0.60 specific gravity gas). Ref: Chapter 6 current edition of ANSI Z223/NFPA 54.

Gas Pressure	Natural (in W.C.)	Propane (in W.C.)
Maximum	13.8	
Minimum	4.5”	12”

When a flexible connector is used, black pipe shall be installed at the furnace gas control valve and extend a minimum of 2-in. (51 mm) outside the furnace.

For direct vent (2-pipe) applications, seal the gas pipe opening to prevent air leakage.

Remove the required knockout or plug. Install the grommet in the opening. Then insert the gas pipe. The grommet is included in the loose parts bag.

Piping should be pressure and leak tested in accordance with the current addition of the NFPA 54/ANSI Z223 in the United States, local, and national plumbing and gas codes before the furnace has been connected.

Refer to current edition of NSCNGPIC in Canada. After all connections have been made, purge lines and check for leakage at furnace prior to operating furnace.

PRESSURE TESTING ABOVE ½ psig:

The furnace and it’s individual shut-off valve must be disconnected from the gas supply piping system during any pressure testing of that system at test pressures in excess of ½ psig (3.5 kPa).

PRESSURE TESTING BELOW ½ psig:

The furnace must be isolated from the gas supply piping by closing its individual manual shut-off valve during any pressure testing of the gas supply piping system at test pressures equal to or less than ½ psig (3.5 kPa).

⚠ WARNING

FIRE OR EXPLOSION HAZARD

A failure to follow this warning could result in personal injury, death, and/or property damage.

If local codes allow the use of a flexible gas appliance connector, always use a new listed connector. Do not use a connector which has previously served another gas appliance. Black iron pipe shall be installed at the furnace gas control valve and extend a minimum of 2-in. (51 mm) outside the furnace.

An accessible manual equipment shutoff valve MUST be installed external to furnace casing and within 6 ft. (2 M) of furnace.

Install a sediment trap externally in the riser leading to furnace as shown in Fig. 32. Connect a capped nipple into lower end of tee. Capped nipple should extend below level of furnace gas controls. Place a ground joint union between furnace gas control valve and exterior manual equipment gas shutoff valve.

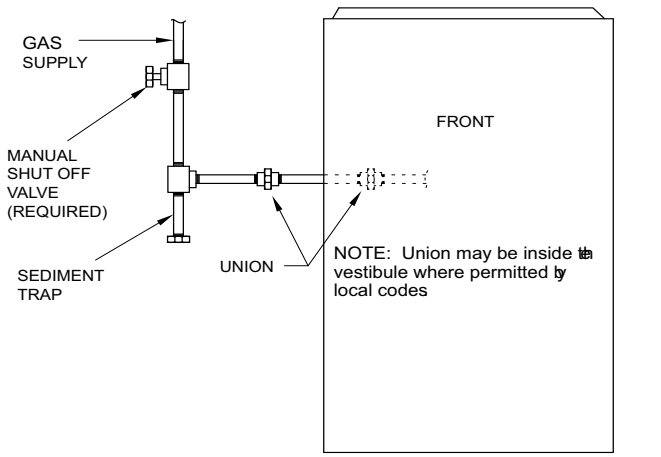

Fig. 32 – Typical Gas Pipe Arrangement

A 1/8-in. (3 mm) NPT plugged tapping, accessible for test gauge connection, MUST be installed immediately upstream of gas supply connection to furnace and downstream of manual equipment shutoff valve.

Piping should be pressure and leak tested in accordance with the current addition of the NFPA 54/ANSI Z223 in the United States, local, and national plumbing and gas codes before the furnace has been connected. Refer to current edition of NSCNGPIC in Canada. After all connections

have been made, purge lines and check for leakage at furnace prior to operating furnace.

NOTE: The furnace gas control valve inlet pressure tap connection is suitable to use as test gauge connection providing test pressure DOES NOT exceed maximum 0.5 psig (14-in. w.c.) stated on gas control valve. See Fig. 64.

If pressure exceeds 0.5 psig (14-in. w.c.), gas supply pipe must be disconnected from furnace and capped before and during supply pipe pressure test. If test pressure is equal to or less than 0.5 psig (14-in. w.c.), turn off electric shutoff switch located on furnace gas control valve and accessible manual equipment shutoff valve before and during supply pipe pressure test. After all connections have been made, purge lines and check for leakage at furnace prior to operating furnace.

Gas Pipe Grommet

For direct vent (2-pipe) applications, the opening for the gas pipe must be sealed to prevent air leakage. Remove the knockout or plug, install the grommet in the hole, then insert the gas pipe. The grommet is included in the loose parts bag. See Fig. 30.

ELECTRICAL CONNECTIONS

⚠ WARNING

ELECTRICAL SHOCK, FIRE OR EXPLOSION HAZARD

Failure to follow safety warnings could result in dangerous operation, serious injury, death or property damage.

Improper servicing could result in dangerous operation, serious injury, death or property damage.

- Before servicing, disconnect all electrical power to furnace.
- When servicing controls, label all wires prior to disconnection. Reconnect wires correctly.
- Verify proper operation after servicing.
- Always reinstall access doors after completing service and maintenance.

⚠ WARNING

ELECTRICAL SHOCK HAZARD

Failure to follow this warning could result in personal injury or death.

Blower door switch opens 115V power to control. No component operation can occur. Do not bypass or close switch with blower door removed.

See Fig. 33 for field wiring diagram showing typical field 115V wiring. Check all factory and field electrical connections for tightness.

Field-supplied wiring shall conform with the limitations of 63°F (33°C) rise.

⚠ WARNING

ELECTRICAL SHOCK AND FIRE HAZARD

Failure to follow this warning could result in personal injury, death, or property damage.

The cabinet MUST have an uninterrupted or unbroken ground according to current of edition NEC NFPA 70 or local codes to minimize personal injury if an electrical fault should occur. In Canada, refer to Canadian Electrical Code CSA C22.1. This may consist of electrical wire, conduit approved for electrical ground or a listed, grounded power cord (where permitted by local code) when installed in accordance with existing electrical codes. Refer to the power cord manufacturer's ratings for proper wire gauge. Do not use gas piping as an electrical ground.

⚠ WARNING

FIRE HAZARD

Failure to follow this warning could result in personal injury, death, or property damage.

Do not connect aluminum wire between disconnect switch and furnace. Use only copper wire. See Fig. 34.

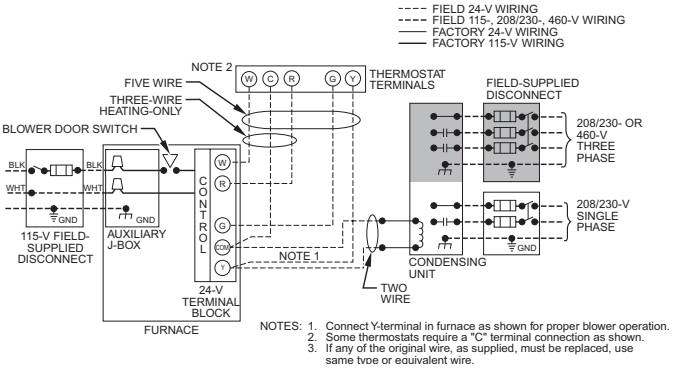

A190079

Fig. 33 – Typical Single-Stage Wiring Diagram

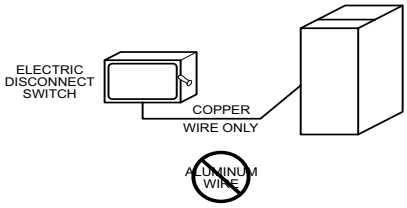

A190279

Fig. 34 – Field-Supplied External Electrical Box on Furnace Casing

Table 12 – Electrical Data

FURNACE SIZE	VOLTS-HERTZ-PHASE	OPERATING VOLTAGE RANGE*		MAXIMUM UNIT AMPS	UNIT AMPACITY†	MINIMUM WIRE SIZE AWG	MAXIMUM WIRE LENGTH FT (M)‡	MAXIMUM FUSE OR CKT BKR AMPS**
		Maximum	Minimum					
36040A	115-60-1	127	104	7.4	10.2	14	36 (11.1)	15
36040B	115-60-1	127	104	7.4	10.2	14	36 (11.1)	15
36060A	115-60-1	127	104	7.5	10.3	14	36 (11.0)	15
42060B	115-60-1	127	104	7.5	10.3	14	36 (11.0)	15
48080B	115-60-1	127	104	11.0	14.7	14	25 (7.7)	15
60080C	115-60-1	127	104	11.0	14.7	14	25 (7.7)	15
60100C	115-60-1	127	104	11.1	14.8	14	25 (7.6)	15
60120D	115-60-1	127	104	11.1	14.8	14	25 (7.6)	15

*. Permissible limits of the voltage range at which the unit operates satisfactorily.
†. Unit ampacity = 125% of largest operating component's full load amps plus 100% of all other potential operating components' (EAC, humidifier, etc.) full load amps
‡. Time-delay type is recommended.
**. Length shown is as measured one way along wire path between furnace and service panel for maximum 2 percent voltage drop.

⚠ CAUTION

FURNACE MAY NOT OPERATE HAZARD

Failure to follow this caution may result in intermittent furnace operation.

Furnace control must be grounded for proper operation or else control will lock out. Control must remain grounded through green/yellow wire routed to gas valve and manifold bracket screw.

115V Wiring

Furnace must have a 115V power supply properly connected and grounded.

NOTE: Proper polarity must be maintained for 115V wiring. If polarity is incorrect, control LED status indicator light will flash rapidly and Status code (10 . 1) is displayed. The furnace will **NOT** operate.

Verify that the voltage, frequency, and phase correspond to that specified on unit rating plate. Also, check to be sure that service provided by utility is sufficient to handle load imposed by this equipment. Refer to rating plate or Table 12 for equipment electrical specifications.

U.S.A. Installations: Make all electrical connections in accordance with the current edition of the National Electrical Code (NEC) NFPA 70 and any local codes or ordinances that might apply.

Canada Installations: Make all electrical connections in accordance with the current edition of the Canadian Electrical Code CSA C22.1 and any local codes or ordinances that might apply.

Use a separate, fused branch electrical circuit with a properly sized fuse or circuit breaker for this furnace. See Table 12 for wire size and fuse specifications. A readily accessible means of electrical disconnect must be located within sight of the furnace.

Furnace is shipped with extended-length high voltage wire leads to reach all potential mounting location of the J-Box. Reduce excess high voltage wire length from inside the furnace vestibule by pulling the wires entirely through the J-Box opening or field supplied strain relief and shortening the leads to no more than 4-inches inside the J-Box.

J-Box Installation

⚠ WARNING

FIRE OR ELECTRICAL SHOCK HAZARD

Failure to follow this warning could result in personal injury, death, or property damage.

High voltage field connections must be located in J-Box with furnace, or in field supplied external disconnect mounted to furnace.

If field-supplied manual disconnect switch is to be mounted on furnace casing side, select a location where a drill or fastener cannot damage electrical or gas components.

The J-Box must be used when field line voltage electrical connections are made to the furnace wiring harness inside the furnace casing. The J-Box cover is not required if a field-supplied external electrical box is attached to the outside of the furnace casing. The field ground wire and furnace main ground wire are grounded when the J-Box bracket is attached to the furnace and the field ground wire and factory ground wire are secured to the bracket grounding screw. If the J-Box cover is not used, the field and factory spliced connections must be located inside the external electrical box. Do not leave splice connections unprotected inside the furnace.

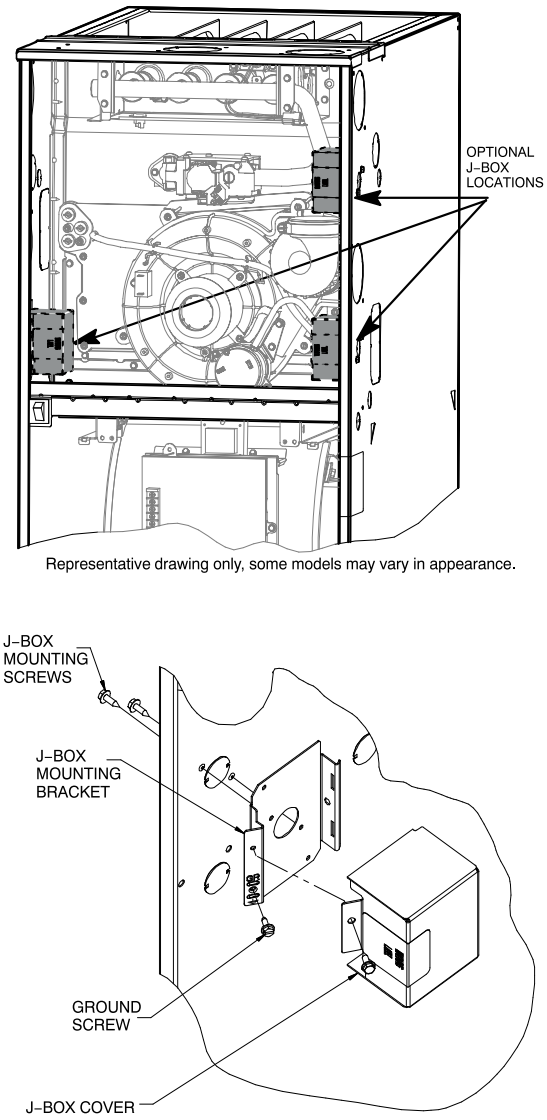

Fig. 35 – Installing J-Box (When Used)

The J-Box cover, mounting bracket and screws are shipped in the loose parts bag included with the furnace. See Fig. 35 for J-Box mounting locations.

The J-Box mounting bracket and green ground screw is used as a grounding point for all line voltage wiring options. The J-Box cover may be omitted when electrical connections are made inside an external electrical box mounted external to the casing.

External Electrical Box on Furnace Casing

NOTE: Check to ensure that external electrical box does not interfere with duct work, gas piping or the indoor coil drain. See Fig. 31 for alternate electric entry through top panel.

1. Select and remove 7/8-in. (22 mm) knockout or plug on the desired side of the casing. Remove the knockout or plug from the casing.

NOTE: If electrical entry through the furnace top panel is used, a 7/8-in. (22 mm) hole must be drilled through the top panel.

2. Drill two (2) 1/8-in. (3 mm) pilot holes through the dimples in the furnace casing near the 7/8-in. hole.

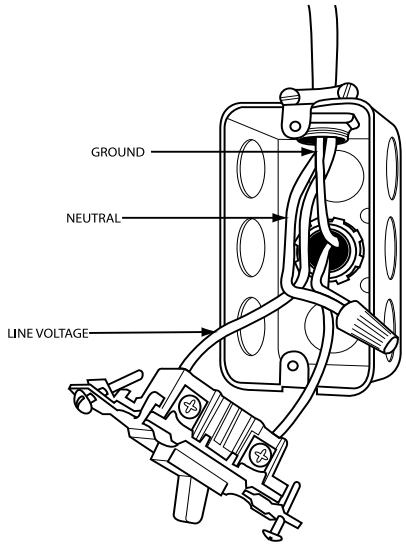

A190278

Fig. 36 – Field-Supplied External Electrical Box on Furnace Casing

NOTE: If electrical entry through the furnace top panel is used, mark the screw hole locations using the mounting holes in the external electrical box as a template.

For a side-mounted external electrical box, complete the following:

1. Align the J-Box bracket with the 7/8-in. (22 mm) hole inside the furnace casing.
2. Install the threaded end of a strain-relief bushing through the J-Box bracket and the furnace casing. Strain-relief bushing should be installed so that the bushing can be tightened around the wiring harness inside the furnace casing.
3. Align the external electrical box with the 7/8-in. (22 mm) hole.
4. Install and tighten the lock-nut on the strain-relief bushing inside the external electrical box.
5. Fasten the external electrical box to the furnace casing using two (2) sheet metal screws.
6. Route field power wiring into external electrical box.
7. Pull furnace line voltage power wires through strain-relief bushing of the external electrical box.
8. Pull the ground wire of the field line voltage wiring through the strain-relief bushing into the furnace casing.
9. Install the green ground screw to the J-Box bracket and attach both ground wires to the green ground screw.
10. Connect any code required external disconnect(s) to field power wiring.
11. Connect field power and neutral leads to furnace power leads inside the external electrical box as shown in Fig. 32.

For a top panel-mounted external electrical box, complete the following:

1. Drill two (2) 1/8-in. (3 mm) pilot holes through the dimples in the furnace casing near the 7/8-in. knockout or plug on the side of the casing. Do not remove the knockout or plug in the side of the casing.
2. Align the J-Box bracket with the pilot holes inside the furnace casing.
3. Install 2 screws through the outside of the casing to secure the J-Box bracket to the furnace casing.
4. Route field power wiring into external electrical box.
5. Pull furnace line voltage power wires through strain-relief bushing of the external electrical box.
6. Pull the ground wire of the field line voltage wiring through the strain-relief bushing into the furnace casing.
7. Install the green ground screw to the J-Box bracket and attach both ground wires to the green ground screw.
8. Connect any code required external disconnect(s) to field power wiring.
9. Connect field power and neutral leads to furnace power leads inside the external electrical box as shown in Fig. 34.

Power Cord Installation in Furnace J-Box

NOTE: Power cords must be able to handle the electrical requirements listed in Table 12. Refer to power cord manufacturer's listings.

1. Install J-Box mounting bracket to inside of furnace casing. See Fig. 35.
2. Route listed power cord through 7/8-in. (22 mm) diameter hole in casing and J-Box bracket.
3. Secure power cord to J-Box bracket with a strain relief bushing or a connector approved for the type of cord used.
4. Pull furnace power wires through 1/2-in. (12 mm) diameter hole in J-Box. If necessary, loosen power wires from strain-relief wire-tie on furnace wiring harness.
5. Connect field ground wire and factory ground wire to green ground screw on J-Box mounting bracket as shown in Fig. 35.
6. Connect power cord power and neutral leads to furnace power leads as shown in Fig. 33.
7. Attach furnace J-Box cover to mounting bracket with screws supplied in loose parts bag. Do not pinch wires between cover and bracket. See Fig. 35.

BX Cable Installation in Furnace J-Box

1. Install J-Box mounting bracket to inside of furnace casing. See Fig. 35.
2. Route BX connector through 7/8-in. (22 mm) diameter hole in casing and J-Box bracket.
3. Secure BX cable to J-Box bracket with connectors approved for the type of cable used.
4. Connect field ground wire and factory ground wire to green ground screw on J-Box mounting bracket as shown in Fig. 35.
5. Connect field power and neutral leads to furnace power leads. as shown in Fig. 33.
6. Attach furnace J-Box cover to mounting bracket with screws supplied in loose parts bag. Do not pinch wires between cover and bracket.

⚠ WARNING

FIRE, EXPLOSION, ELECTRICAL SHOCK, AND CARBON MONOXIDE POISONING HAZARD

Failure to follow this warning could result in dangerous operation, personal injury, death, or property damage.

Do not drill into blower shelf of furnace to route control wiring. Route any control or accessory wiring to the blower compartment through external holes provided on the casing.

24V Wiring

Make field 24V connections at the 24V terminal strip. See Fig. 38. Connect terminal Y as shown in Fig. 33 for proper cooling operation. Use only AWG #18, color-coded, copper thermostat wire.

NOTE: Use AWG #18 color-coded copper thermostat wire for lengths up to 100 ft. (31 M). For wire lengths over 100 ft., use AWG #16 wire.

The 24V circuit contains an automotive-type, 3A fuse located on the control. Any direct shorts during installation, service, or maintenance could cause this fuse to blow. If fuse replacement is required, use ONLY a 3A fuse of identical size. See Fig. 38.

ACCESS0RIES

(See Fig. 37 and Fig. 38)

1. Electronic Air Cleaner (EAC)
   Connect an accessory Electronic Air Cleaner (if used) using 1/4-in. female quick connect terminals to the two male 1/4-in. quick-connect terminals on the control board marked EAC-1 and EAC-2. The terminals are rated for 115 VAC, 1.0 amps maximum and are energized during blower motor operation.
2. Humidifier (HUM)
   Connect an accessory 24 VAC, 0.5 amp. maximum humidifier (if used) to the 1/4-in male quick-connect HUM terminal and COM-24V screw terminal on the control board thermostat strip. The HUM terminal is energized when the pressure switch closes during a call for heat (See Fig. 37).

NOTE: DO NOT connect furnace control HUM terminal to HUM (humidifier) terminal on humidity sensing thermostat, zone controller or similar device. See humidity sensing thermostat, zone controller, thermostat, or controller manufacturer's instructions for proper connection.

NOTE: For 24V & 115V EAC or Humidifier Accessory details, see Accessory instructions.

Alternate Power Supplies

This furnace is designed to operate on utility generated power which has a smooth sinusoidal waveform. If the furnace is to be operated on a generator or other alternate power supply, the alternate power supply must produce a smooth sinusoidal waveform for compatibility with the furnace electronics. The alternate power supply must generate the same voltage, phase, and frequency (Hz) as shown in Table 12 or the furnace rating plate.

Contact the alternate power supply manufacturer for specifications and details.

Power from an alternate power supply that is non-sinusoidal may damage the furnace electronics or cause erratic operation.

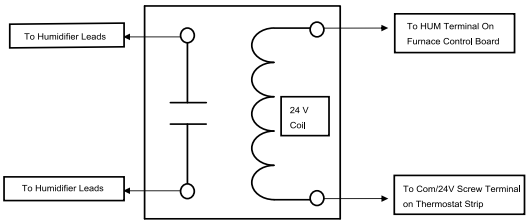

A11157

Fig. 37 – Field-Supplied Isolation Relay for Humidifiers with Internal Power Supply

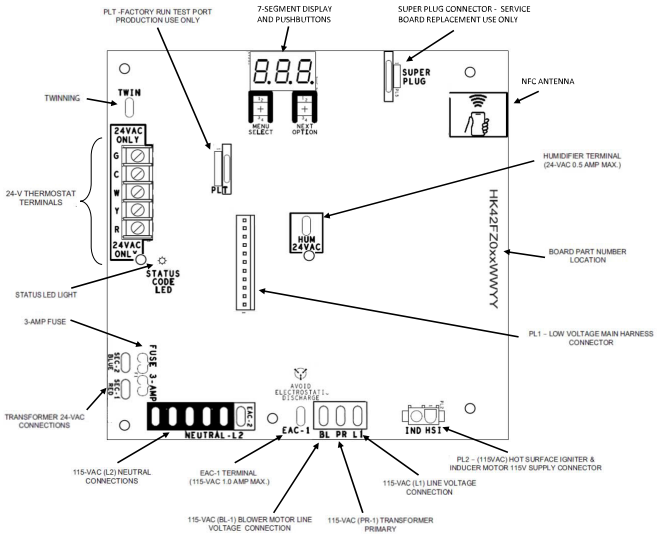

A210192

Fig. 38 – Example of Single Stage Furnace Control

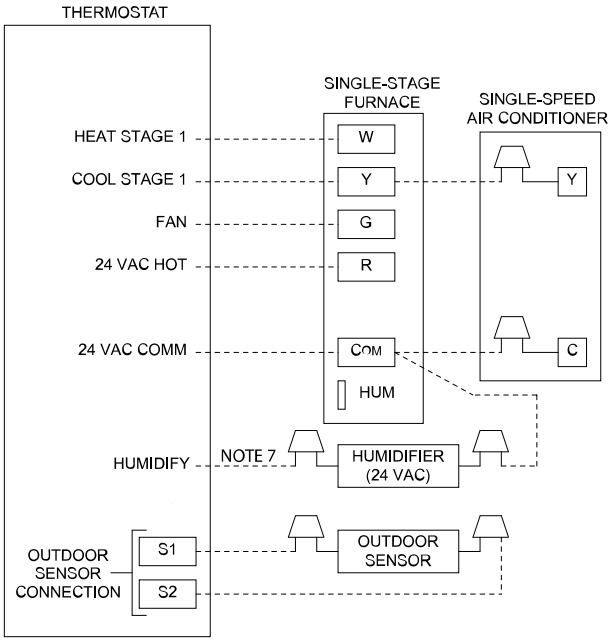

Single-Stage Furnace with Single-Speed Air Conditioner

A230219

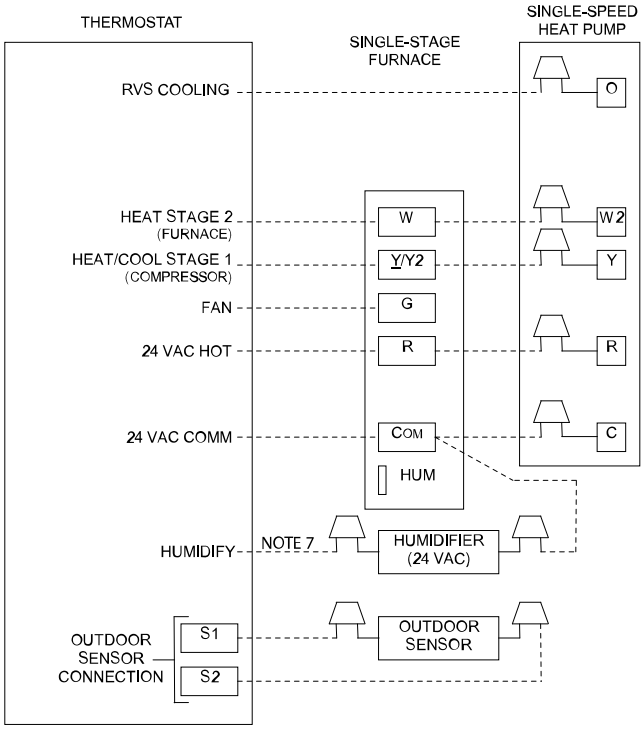

A230220

Fig. 39 – Thermostat Wiring Diagrams for Single Stage Furnace with Single-Speed A/C & Heat Pump

Notes for thermostat diagrams:

1. Thermostat output signals may vary. Consult thermostat installation instructions for more information.
2. Refer to outdoor equipment Installation Instructions for additional information and setup procedure.
3. Configure the thermostat for air conditioner installations. Refer to thermostat instructions.
4. Configure thermostat for dual fuel operation. Refer to thermostat instructions.
5. Heat pump MUST have a high-pressure switch for dual fuel applications.

6. For Single-stage AC or HP, configure thermostat for single-stage compressor operation. Refer to thermostat instructions.
7. NO connection should be made to the furnace HUM terminal when utilizing the thermostat's 24V humidifier output.
8. Thermostat terminal connection order on furnace control may vary-reference furnace control labeling for designations

⚠ NOTICE

OPTIONAL VENTING BELOW THE FURNACE

The venting system may be positioned below the furnace **ONLY** IF the factory accessory External Vent Trap Kit is used. The External Vent Trap Kit is only approved for PVC/ABS DWV venting systems.

CAREFULLY FOLLOW THE INSTRUCTIONS PROVIDED WITH THE EXTERNAL VENT TRAP KIT FOR LAYING OUT THE VENTING SYSTEM AND THE DRAIN SYSTEM. The instructions included with this furnace **DO NOT APPLY** to vent systems that are located below the furnace.

VENTING

NOTE: Planning for the venting system should be done in conjunction with planning for the ductwork, drainage, and furnace accessories, such as air cleaners and humidifiers. Begin assembling the venting system **AFTER** the furnace is set in place in the required orientation.

Venting for this furnace shall follow all Local codes for Category IV venting systems. This furnace is CSA approved for venting with PVC/ABS DWV venting systems. This furnace is also CSA approved for venting with M&G DuraVent®PolyPro® or Centrotherm Innoflue® polypropylene venting systems using single wall straight and flex, and required fittings (elbows, reducers, increasers, connectors, adapters) only.

NOTE: THESE INSTRUCTIONS **DO NOT** CONTAIN DETAILED INSTALLATION INSTRUCTIONS FOR POLYPROPYLENE VENTING SYSTEMS. Refer to the polypropylene venting system manufacturer's installation instructions for the polypropylene venting system installation.

NOTE: When using polypropylene venting systems, all venting materials used, including the vent terminations, must be from the same manufacturer.

Special Venting Requirements for Installations in Canada

Installation in Canada must conform to the requirements of CSA B149 code. Vent systems **must** be composed of pipe, fittings, cements, and primers listed to ULC S636. The special vent fittings, accessory concentric vent termination kits, (KGAVT0701CVT or KGAVT0801CVT) and accessory external drain trap available from the furnace manufacturer have been certified to ULC S636 for use with those Royal Pipe and IPEX PVC vent components which have been certified to this standard. In Canada, the primer and cement must be of the same manufacturer as the vent system – GVS-65 Primer (Purple) for Royal Pipe or IPEX System 636, PVC/CPVC Primer, Purple Violet for Flue Gas Venting and GVS-65 PVC Solvent Cement for Royal Pipe or IPEX System $636_{(1)}$t, PVC Cement for Flue Gas Venting, rated Class IIA, 65°C. must be used with this venting system - do not mix primers and cements from one manufacturer with a vent system from a different manufacturer. Follow the manufacturer's instructions in the use of primer and cement and never use primer or cement beyond its expiration date.

The safe operation, as defined by ULC S636, of the vent system is based on following these installation instructions, the vent system manufacturer's installation instructions, and proper use of primer and cement. All fire stop and roof flashing used with this system must be UL listed material. Acceptability under Canadian standard CAN/CSA B149 is dependent upon full compliance with all installation instructions. Under this standard, it is recommended that the vent system be checked once a year by qualified service personnel.

The authority having jurisdiction (gas inspection authority, municipal building department, fire department, etc.) should be consulted before installation to determine the need to obtain a permit.

*IPEX System 636™ is a trademark of IPEX Inc.

⚠ WARNING

CARBON MONOXIDE POISONING HAZARD

Failure to follow the instructions outlined below for each appliance being placed into operation could result in carbon monoxide poisoning or death.

For all venting configurations for this appliance and other gas appliances placed into operation for this structure, provisions for adequate combustion, ventilation, and dilution air must be provided in accordance with:

U.S.A. Installations: section 9.3 of current edition of NFPA 54/ANSI Z223.1, Air for Combustion and Ventilation and applicable provisions of the local building codes.

Canadian Installations: Part 8 of current edition of CAN/CSA-B149.1. Venting Systems and Air Supply for Appliances and all authorities having jurisdiction.

Consignes spéciales pour l'installation de ventilation au Canada

L'installation faite au Canada doit se conformer aux exigences du code CSA B149. Ce systême de ventillation **doit** se composer de tuyaux, raccords, ciments et apprêts conformes au ULC S636. La tuyauterie de ventilation des gaz, ses accessoires, le terminal concentrique mural (KGAVT0701CVT or KGAVT0801CVT) ainsi que l'ensemble du drain de condensation extérieur fourni par le fabricant de cette fournaise ont été certifiés ULCS 636 pour l'application des composantes Royal Pipe, IPEX PVC qui sont certifiées à ce standard. Au Canada, l'apprêt et le ciment doivent être du même fabricant que le système d'évacuation. L'apprêt GVS-65 (Purple) et le ciment-solvant GVS-65 doivent être utilisé avec les Royal Pipe. Système IPEX 636, apprêt PVC/CPVC, Purple pour évacuation des gaz de combustion et système IPEX 636(1)t, ciment PVC pour évacuation des gaz de combustion, coté classe IIA, 65 deg C. doivent être utilisés avec le système d'évacuation IPEX 636 – Ne pas combiner l 'apprêt et le ciment d'un manufacturier avec un système d'évacuation d'un manufacturier différent.

Bien suivre les indications du manufacturier lors de l'utilisation de l'apprêt et du ciment et ne pas utiliser ceux-ci si la date d'expiration est atteinte.

L'opération sécuritaire, tel que définit par ULC S636, du système de ventilation est basé sur les instructions d'installation suivantes, ainsi que l'usage approprié de l'apprêt et ciment. Tout arrët feu et solin de toit utilisés avec ce système doivent être des matériaux listés UL. L'acceptation du standard Canadien CAN/CSA B149 est directement relié à l'installation conforme aux instructions ci- haut mentionnées. Le standard Canadien recommande l' inspection par un personel qualifié et ce, une fois par année.

Les autoritées ayant juridiction (inspecteurs de gas, inspecteurs en bâtiments, département des incendies, etc) devraient être consultées avant l'installation afin de déterminer si un permis est requis.

⚠ NOTICE

RECOMMENDED SUPPORT FOR VENT TERMINATION

It is recommended that sidewall vent terminations of over 24 inches (0.6 M) in length or rooftop vent terminations of over 36 inches (1 M) in length be supported by EITHER the factory accessory vent termination kit or field-supplied brackets or supports attached to the structure. A factory accessory vent termination kit may be used for direct vent terminations. Termination kits are available for 2-in. or 3-in. pipe. See Table 13 for available options.

Table 13 – Vent Termination Kit for Direct Vent (2-pipe) Systems

Vent and Combustion Air Pipe Diameters	Approved Two-Pipe Termination Fittings					Allowable Concentric Vent Kit	Concentric Vent Kit
	1 1/2-in. (38 mm)	2-in. (51 mm)	2 1/2-in. (64 mm)	3-in. (76-mm)	4-in. (102 mm)		
1 1/2-in. (38 mm)	No	Yes	No	No	No	2-in. (51 mm)	KGAVT0701CVT
2-in. (51 mm)	No	Yes	No	No	No	2-in. (51 mm)	KGAVT0701CVT
2 1/2-in. (64 mm)	No	No	No	Yes	No	2-in. (51 mm) 3-in. (76 mm)	KGAVT0701CVT KGAVT0801CVT
3-in. (76-mm)	No	No	No	Yes	No	3-in. (76 mm)	KGAVT0801CVT
4-in. (102 mm)	No	No	No	Yes	Yes	3-in. (76 mm)	KGAVT0801CVT

Table 14 – Approved Combustion-Air and Vent Pipe, Fitting and Cement Materials

MATERIALS						
USA	1. All pipe*, fittings*, primers**, and solvents** must conform to American National Standards Institute (ANSI) standards and American Society for Testing and Materials (ASTM) standards 2. See Table below for approved materials for use in the U.S.A. 3. UL 1738 vent systems must be composed of pipe*, fittings**, cements, and primers** from the same supplier.					
CANADA	1. Installation in Canada must conform to the requirements of CAN/CSA B149 code. 2. Vent systems must be composed of pipe*, fittings*, cements, and primers from the same supplier and listed to ULC S636. 3. Not all materials below may be approved or listed to ULC S636. 4. Factory accessory concentric vent kits are ULC S636 listed.					
Material	**Description**	**Type**	**ASTM / ULC / UL Specification**			
			Pipe*	**Fittings***	**Solvents/Primers****	**Cements**
PVC	Pressure Pipe	Schedule 40	D1785 / UL 1738	D2466 or D2665	F656	D2564
	DWV	Schedule 40	D1785 / D2665			
	SDR 26	N/A	D2241			
	SDR 21	N/A	D2241			
	IPEX	Schedule 40	ULC S636	ULC S636	ULC S636	ULC S636
	Royal Pipe	Schedule 40	ULC S636	ULC S636	ULC S636	ULC S636
ABS	ABS	Schedule 40	D2661	D2468	Clear Cleaner For ABS†	D2235
	DWV-IPS Sizes	Schedule 40	D2661	D2661		
CPVC	Pressure Pipe	Schedule 40	F441	F438	F656	F493
	SDR	N/A	F442	N/A		
	IPEX	Schedule 40	ULC S636	ULC S636	ULC S636	ULC S636
	Royal Pipe	Schedule 40	ULC S636	ULC S636	ULC S636	ULC S636
* PVC and ABS pipe may use either DWV or pressure rated fittings. ** Colored or tinted solvents or primers must be used where required by code in the USA † ABS plastic does not require a primer before solvent cementing. A cleaner for ABS is recommended to remove any surface residue. ABS cleaners are not subject to ASTM standards.						
Polypropylene	Approved Manufacturer				Solvents Primers	Cements
Poly Pro®	M & G Dura Vent				Not Permitted	
Innoflue®	Centrotherm				Not Permitted	
ECCO Polypropylene Vent®	ECCO Manufacturing				Not Permitted	
NOTE: Polypropylene vent systems are UL−1738 and ULC S636 listed and assembled using mechanical fastening systems supplied by the vent manufacturer.						

⚠ WARNING

CARBON MONOXIDE POISONING HAZARD

Failure to follow the steps outlined below for each appliance connected to the venting system being placed into operation could result in carbon monoxide poisoning or death.

The following steps shall be followed for each appliance connected to the venting system being placed into operation, while all other appliances connected to the venting system are not in operation:

- Seal any unused openings in venting system.
- Inspect the venting system for proper size and horizontal pitch, as required in the National Fuel Gas Code, ANSI Z223.1/NFPA 54 or the CSA B149 Natural Gas and Propane Installation Code and these instructions. Determine that there is no blockage or restriction, leakage, corrosion and other deficiencies, which could cause an unsafe condition.
- As far as practical, close all building doors and windows and all doors between the space in which the appliance(s) connected to the venting system are located and other spaces of the building.
- Close fireplace dampers.
- Turn on clothes dryers and any appliance not connected to the venting system. Turn on any exhaust fans, such as range hoods and bathroom exhausts, so they are operating at maximum speed. Do not operate a summer exhaust fan.
- Follow the lighting instructions. Place the appliance being inspected into operation. Adjust the thermostat so appliance is operating continuously.
- Test for spillage from draft hood equipped appliances at the draft hood relief opening after 5 minutes of main burner operation. Use the flame of a match or candle.
- If improper venting is observed during any of the above tests, the venting system must be corrected in accordance with the National Fuel Gas Code, ANSI Z223.1/NFPA 54 and/or CSA B149.1 Natural Gas and Propane Installation Code.
- After it has been determined that each appliance connected to the venting system properly vents when tested as outlined above, return doors, windows, exhaust fans, fireplace dampers and any other gas-fired burning appliance to their previous conditions of use.

General

If this furnace replaces a furnace that was connected to a vent system or chimney, the vent or vent connectors of other remaining appliances may need to be re-sized. Vent systems or vent connectors of other appliances must be sized to the minimum size as determined using appropriate table found in the current edition of National Fuel Gas Code NFPA 54/ANSI Z-223.1. In Canada, refer to CAN/CSA-B149.1.

An abandoned masonry chimney may be used as a raceway for properly insulated and supported combustion-air (when applicable) and vent pipes. Each furnace must have its own set of combustion-air and vent pipes and be terminated individually, as shown in Fig. 40 for Direct Vent (2-Pipe) system, or Fig. 41 for single-pipe or ventilated combustion air option.

A furnace shall not be connected to a chimney flue serving a separate appliance designed to burn solid fuel.

Other gas appliances with their own venting system may also use the abandoned chimney as a raceway providing it is permitted by local code, the current edition of the National Fuel Gas Code, and the vent or liner manufacturer's installation instructions. Care must be taken to prevent the exhaust gases from one appliance from contaminating the combustion air of other gas appliances.

Do not take combustion air from inside the chimney when using ventilated combustion air or single-pipe vent option.

These furnaces can be vented as direct-vent (two-pipe), ventilated combustion air or non-direct (single-pipe) vent system. Each type of venting system is described below. Common venting between these furnaces or other appliances is prohibited.

Materials

U.S.A.

Combustion air and vent pipe, fittings, primers, and solvents must conform to American National Standards Institute (ANSI) standards and American Society for Testing and Materials (ASTM) standards. See Table 14 for approved materials for use in the U.S.A. This furnace is also CSA approved for venting with M&G DuraVent®PolyPro® or Centrotherm Innoflue® polypropylene venting systems using single wall straight and flex, and required fittings (elbows, reducers, increasers, connectors, adapters) only.

Canada

Special Venting Requirements for Installations in Canada, Installation in Canada must conform to the requirements of CAN/CSA B149 code. Vent systems **must** be composed of pipe, fittings, cements, and primers listed to ULC S636. M&G DuraVent®PolyPro® or Centrotherm Innoflue® polypropylene venting systems are ULC S636 listed.

NOTE: When using polypropylene venting systems, all venting materials used, including the vent terminations must be from the same manufacturer.

Venting Systems

Direct Vent / 2-Pipe System

In a direct-vent (2-pipe) system, all air for combustion is taken directly from outdoor atmosphere, and all flue products are discharged to outdoor atmosphere. Combustion-air and vent pipes must terminate together in the same atmospheric pressure zone, either through the roof (preferred) or a sidewall. See Fig. 43 for references to clearances required by National Code authorities.

⚠ NOTICE

OPTIONAL CONFIGURATION FOR COMBUSTION AIR INLET PIPE

In applications where there is a risk of excessive moisture entering the combustion air inlet pipe, a moisture trap may be added to the inlet pipe to help prevent moisture from entering the furnace from the combustion air inlet pipe. See Fig. 51.

When sizing venting systems, the equivalent length of the optional inlet pipe moisture trap must be taken into account.

Ventilated Combustion Air Systems

In a ventilated combustion air option, the vent terminates and discharges the flue products directly to the outdoors similar to a direct vent system. See Fig. 44 for references to clearances required by National code authorities.

All air for combustion is piped directly to the furnace from a space that is well ventilated with outdoor air (such as an attic or crawl space) and the space is well isolated from the living space or garage. Combustion air requirements for this option are the same as the requirements for providing outside air for combustion for a single pipe vent system. Refer to AIR FOR COMBUSTION AND VENTILATION on p8.

Non-Direct Vent (1-pipe) System

In a non direct-vent (1-pipe) system, all air for combustion is taken from the area adjacent to furnace, and all flue products are discharged to

outdoor atmosphere. Air for combustion must be supplied as described in AIR FOR COMBUSTION AND VENTILATION on p8. Do not use an abandoned chimney to supply outside air to the furnace. See Fig. 44 for references to vent clearances required by National code authorities.

A combustion air pipe to the outdoors is not required for a single-pipe vent system. A 12-in. (304 mm) long pipe with a 2-in. (51 mm) tight radius 90° elbow is **required** to be attached to the combustion air pipe adapter on the furnace. See Fig. 49. This short inlet air pipe helps to ensure stable combustion, as well as allow for sound attenuation. To aid sound attenuation, point the inlet air pipe away from occupants. An extra elbow and/or five feet of pipe may be used to accomplish the sound attenuation function.

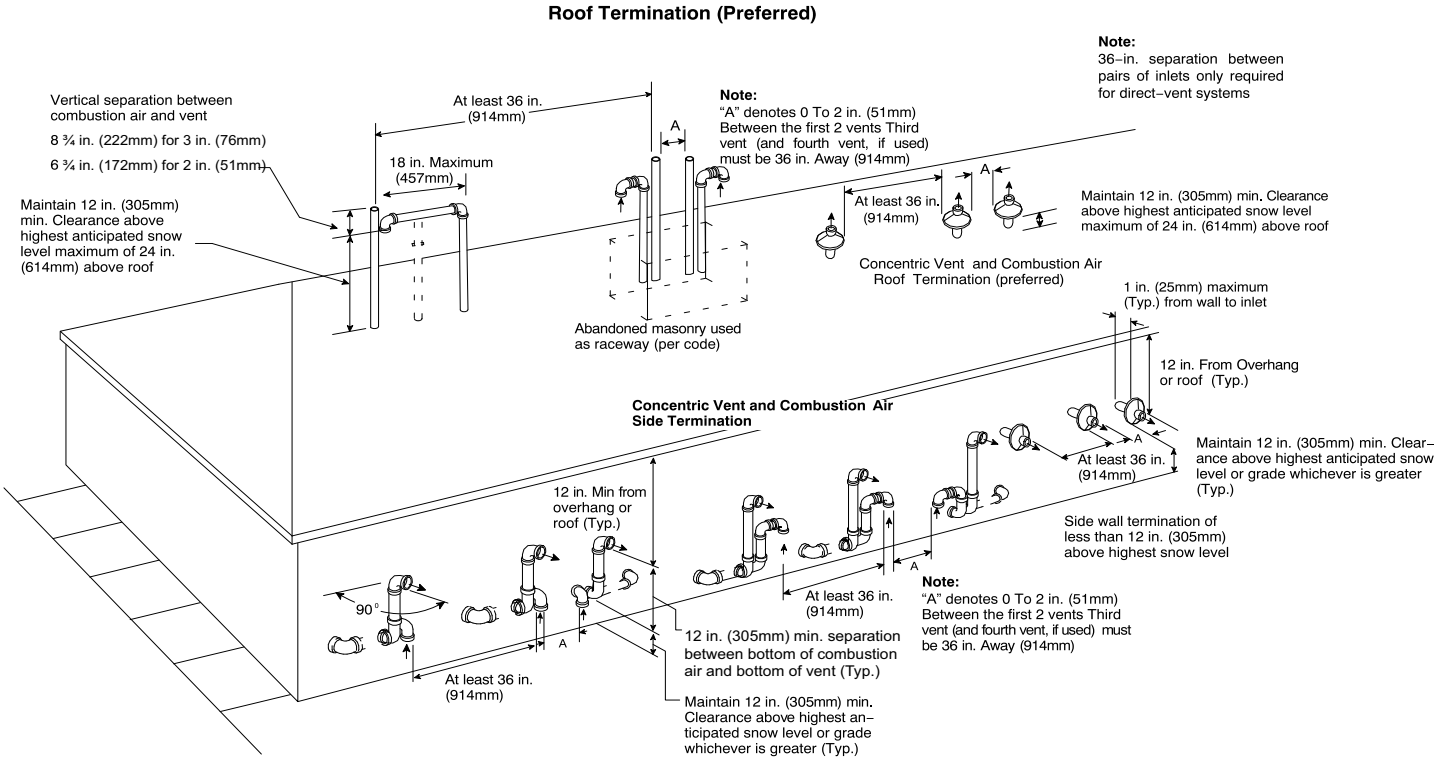

Fig. 40 – Combustion Air and Vent Pipe Termination for Direct Vent (2-Pipe) System

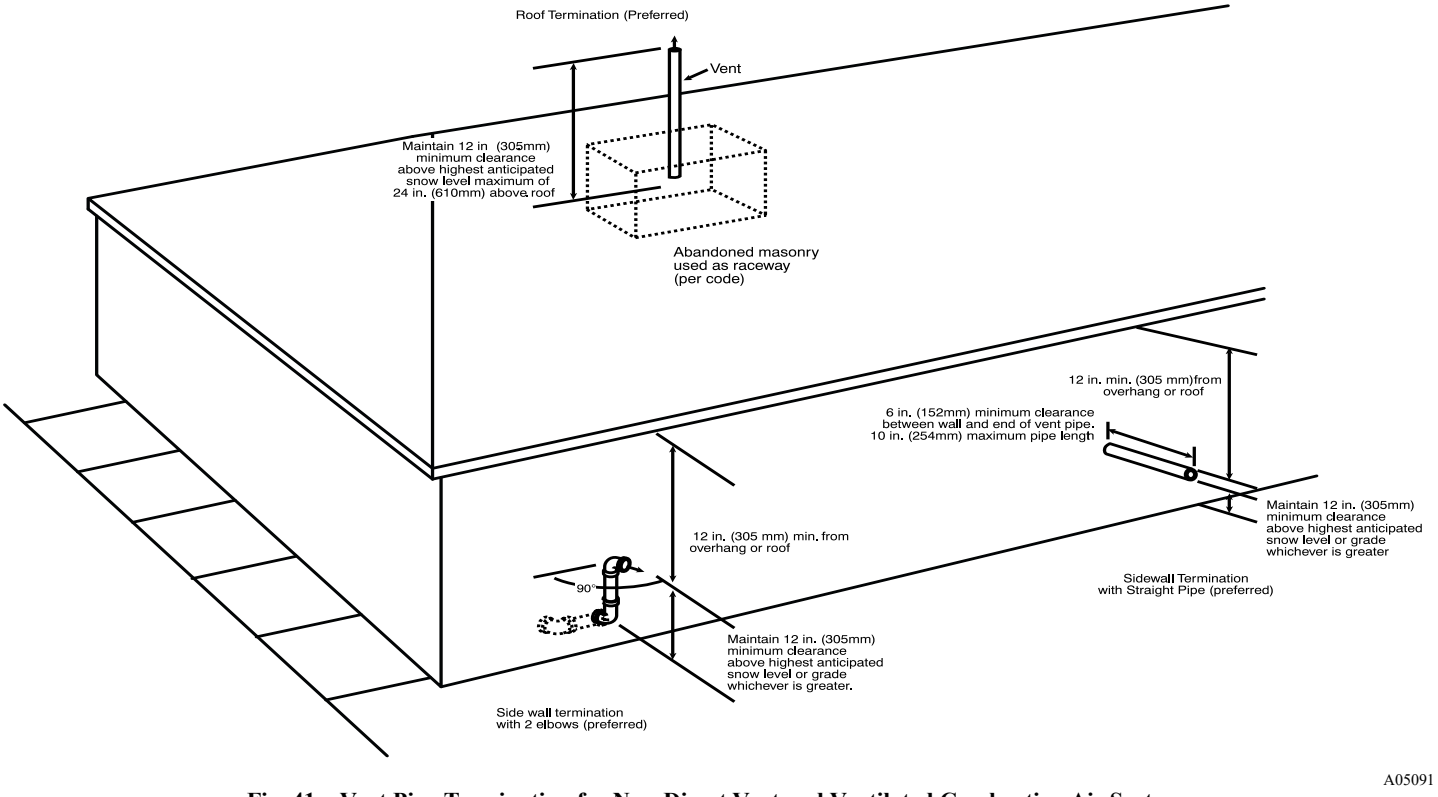

Fig. 41 – Vent Pipe Termination for Non-Direct Vent and Ventilated Combustion Air System

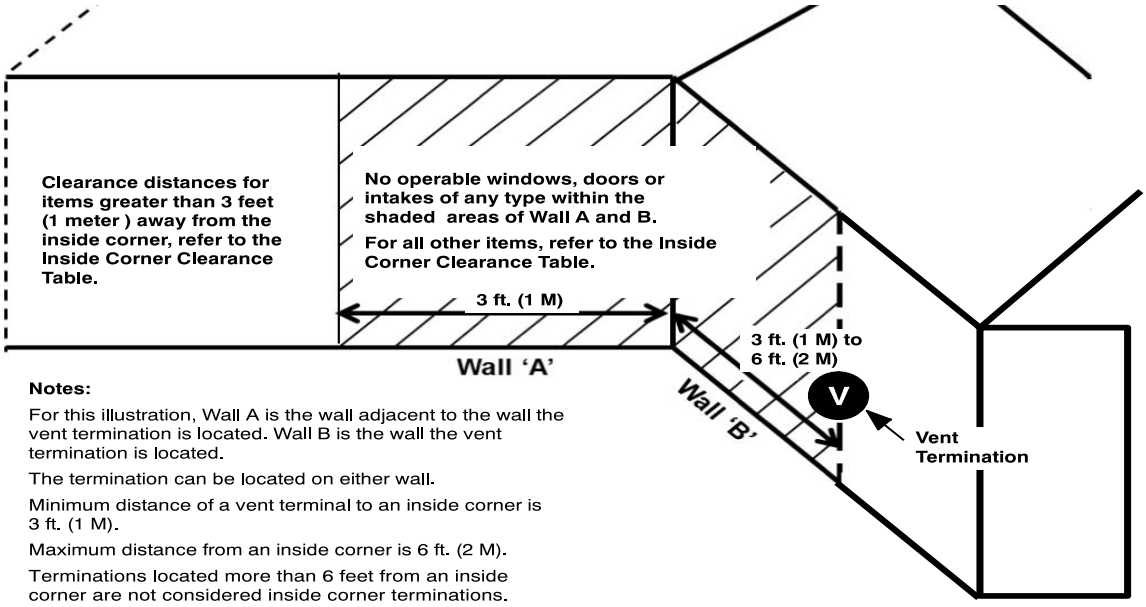

A190032

Fig. 42 – Inside Corner Termination

Inside Corner Terminations

Inside corner vent terminations are permitted provided that:

- Only two exterior walls come together to form an angle of 90° to 135°. There are no other exterior walls attached to either wall to form an alcove.
- The clearance distances apply when the vent is at least 3 feet (1 meter) from, but not more than 6 feet (2 meters) away from an inside corner.
- For vent terminations located more than 6 feet (2 meters) from an inside corner, refer to the appropriate Direct Vent Clearance Table for all two pipe terminations or Non-Direct Vent Clearance Table for all single pipe terminations.
- The clearance distances to items between the vent termination and the outside corner, refer to the appropriate Direct Vent Clearance Table for all two pipe terminations or Non-Direct Vent Clearance Table for all single pipe terminations.

For clearance distances when vent termination is located more than 6 ft. (2 M) away from an inside corner, refer to the appropriate Direct Vent or Non-Direct Vent Clearance Table.	
Clearance description when termination is at least 3 ft. (1 M) away and not more than 6 ft. (2 M) away from an inside corner.	
Clearance above grade, veranda, porch, deck, balcony or anticipated snow level	12-in. (305 mm)
Clearance to a permanently closed window on either Wall A or Wall B	12-in. (305 mm)
Vertical clearance to a soffit located above the vent termination within a horizontal distance of 2 ft. (61 cm) from the centerline of the vent termination	6 ft. (2 M)
Clearance to a ventilation exhaust (including HRV/ERV) on either Wall A or Wall B	12-in. (305 mm)
Clearance above paved sidewalk or paved driveway located on public property	7 ft. (2.1 M)
Clearance under a veranda, porch, deck, or balcony	N.P.*
No operable windows, doors or intakes of any type are permitted on Wall B between the vent termination and the inside corner when the vent termination is at least 3 ft. (1 M) away and not more than 6 ft. (2 M) away from an inside corner.	
The following items on Wall A must be located at least 3 ft. (1 M) away from the inside corner when a vent termination is located on Wall B and the vent termination is at least 3 ft. (1 M) away or not more than 6 ft. (2 M) away from an inside corner.	
A window or door that may be opened	
The centerline extended above electrical meter or gas service regulator assembly	
A service regulator vent outlet	
The centerline of a dryer or water heater vent, or other appliance's vent intake	
A non-mechanical air supply inlet	
Clearance distances shown for Wall A are measured horizontally from the exit of the termination on Wall B to the closest edge of the item shown below.	
Clearance to a mechanical air supply (including HRV/ERV) inlet unless termination is 3 ft. (1 M) above the horizontal line of the intake	10 ft. (3 M)
For clearance distances from a vent termination to the outside corner of the wall, refer to the appropriate Direct Vent or Non-Direct Vent Clearance Table	
*N.P. = Not Permitted *N/A = Not Applicable	

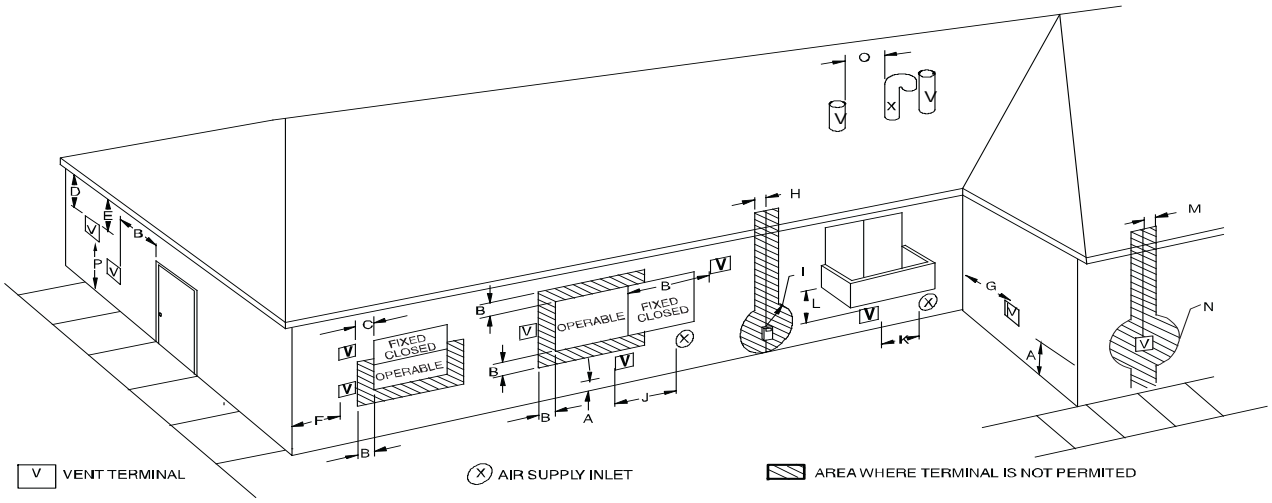

A12326

Fig. 43 – Direct Vent Termination Clearance

NOTE: The following is based upon National codes for gas appliances and is provided as a reference. Refer to local codes which may supersede these standards and/or recommendations.

Item	Clearance Description	Canadian Installations (1) (per CAN/CSA B149.1)	U.S. Installations (2) (per ANSI Z223.1/NFPA 54)
A	Clearance above grade, veranda, porch, deck, balcony or anticipated snow level	12 in. (305 mm) 18 in. (457 mm) above roof surface.	12 in. (305 mm)
B	Clearance to a window or door that may be opened	12 in. (305 mm) for appliances >10,000 BTUh (3 kW) and </=100,000 BTUh (30 kW), 36 in. (914 mm) for appliances >100,000 BTUh (30 kW)	9 in. (229 mm) for appliances >10,000 BTUh (3 kW) and </= 50,000 BTUh (15 kW), 12 in. (305 mm) for appliances >50,000 BTUh (15kW)
C	Clearance to a permanently closed window	For clearances not specified in ANSI Z223.1/NFPA 54 or CAN/CSA B149.1, clearances shall be in accordance with local installation codes and the requirements of the gas supplier and the manufacturer's installation instructions. Manufacturer's Recommendation: See Notes 3-8.	
D	Vertical clearance to a ventilated soffit located above the terminal within a horizontal distance of 2 feet (61 cm) from the centerline of the terminal		
E	Clearance to an unventilated soffit		
F	Clearance to an outside corner		
G	Clearance to an inside corner		
H	Clearance to each side of the centerline extended above electrical meter or gas service regulator assembly	3 ft. (.9 M) within 15 ft. (4.6 M) above the meter/regulator assembly.	3 ft. (.9 M) within 15 ft. (4.6 M) above the meter/regulator assembly.
I	Clearance to service regulator vent outlet	3ft. (.9 M)	See Note 4.
J	Clearance to non—mechanical air supply inlet to building or the combustion air inlet to any other appliance	12 in. (305 mm) for appliances >10,000 Btuh(3 kW) and </= 100,000 BTUh (30 kW), 36 in. (914 mm) for appliances >100,000 BTUh (30 kW)	9 in. (9 mm) for appliances >10,000 BTUh (3 kW) and </= 50,000 BTUh (15 kW), 12 in.(305 mm) for appliances >50,000 BTUh (15kW)
K	Clearance to a mechanical air supply inlet	6 ft. (1.8 M)	3ft. (.9 M) above if within 10 ft. (3 M) horizontally
L	Clearance under a veranda, porch, deck, or balcony	12 in. (305 mm). Permitted only if veranda, porch, deck, or balcony is fully open on a minimum of two sides beneath the floor.	See Note 4. Manufacturer's Recommendation: See Notes 3-8.
M	Clearance to each side of the centerline extended above or below vent terminal of the furnace to a dryer or water heater vent, or other appliance's vent intake or exhaust	12 in. (305 mm)	12 in. (305 mm)
N	Furnace combustion air intake clearance to a water heater vent, dryer vent or other types of appliance exhaust.	3 ft. (.9 M)	3 ft. (.9 M)
0	Clearance from a plumbing vent stack	3 ft. (.9 M)	3 ft. (.9 M)
P	Clearance above or adjacent to paved sidewalk or paved driveway located on public property	7 ft. (2.1 M) Vent shall not terminate above or adjacent to a sidewalk or paved driveway that is located between two single family dwellings and serves both dwellings.	See Note 4. Manufacturer's Recommendation: See Notes 3-8.

> greater than, ≥ greater than or equal to, < less than, ≤ less than or equal to

NOTE:

1. In accordance with the current CAN/CSA B149.1, Natural Gas and Propane Installation Code.
2. In accordance with the current ANSI Z223.1/NFPA 54, National Fuel Gas Code
3. **NOTE: This table is based upon National codes for gas appliances, and are provided as a reference. Refer to Local codes which may supersede these standards and/or recommendations.**
4. For clearances not specified in ANSI Z223.1/NFPA 54 or CAN/CSA B 149.1, clearances shall be in accordance with local installation codes and the requirements of the gas supplier and the manufacturer's installation instructions.
5. When locating vent terminations, consideration must be given to prevailing winds, location, and other conditions which may cause recirculation of the combustion products of adjacent vents. Recirculation can cause poor combustion, inlet condensate problems, vent termination icing, and/or accelerated corrosion of the heat exchangers.
6. Design and position vent outlets to avoid ice build-up on and moisture damage to surrounding surfaces.
7. The vent for this appliance shall not terminate:
   a. Near soffit vents of crawl space vents or other areas where condensate or vapor could create a nuisance or hazard or property damage; or
   b. Where condensate vapor could cause damage or could be detrimental to the operation of regulators, relief valves, or other equipment.
8. Avoid venting under a deck or large overhang. Recirculation could occur and cause performance or system problems. Ice build-up may occur.

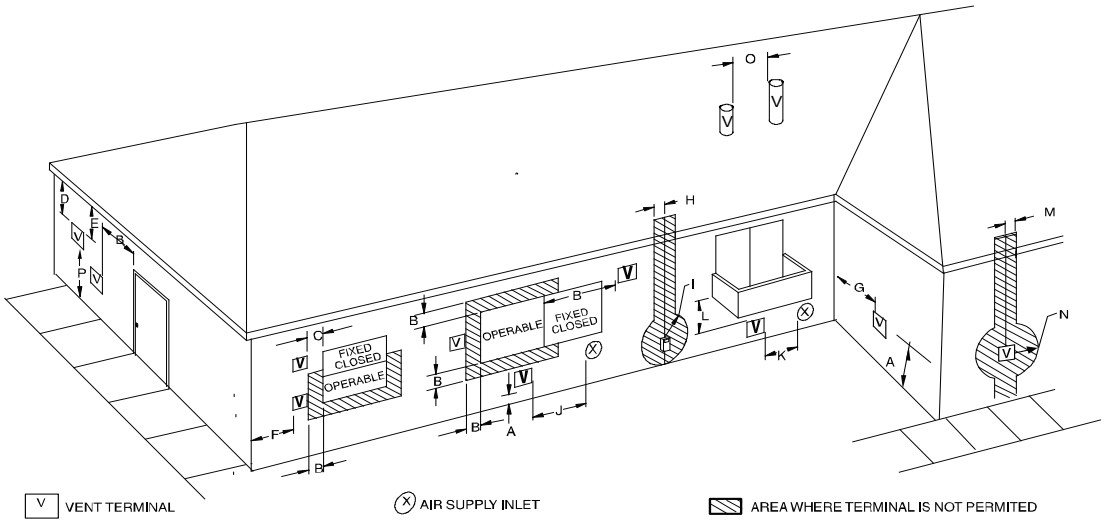

A12325

Fig. 44 – Ventilated Combustion Air and Non-Direct Vent Termination Clearance

NOTE: The following is based upon National codes for gas appliances and is provided as a reference.
Refer to local codes which may supersede these standards and/or recommendations.

Item	Clearance Description	Canadian Installations (1) (per CAN/CSA B149.1)	U.S. Installations (2) (per ANSI Z223.1/NFPA 54)
A	Clearance above grade, veranda, porch, deck, balcony or anticipated snow level	12 in. (305 mm) 18 in. (457 mm) above roof surface.	12 in. (305 mm)
B	Clearance to a window or door that may be opened	12 in. (305 mm) for appliances >10,000 BTUh (3 kW) and </=100,000 BTUh (30 kW), 36 in. (914 mm) for appliances >100,000 BTUh (30 kW)	4ft. (1.2M) below or to the side of the opening, 1 ft (.3M) above the opening. Manufacturer's Recommendation: See Note 8.
C	Clearance to a permanently closed window	For clearances not specified in ANSI Z223.1/NFPA 54 or CAN/CSA B149.1, clearances shall be in accordance with local installation codes and the requirements of the gas supplier and the manufacturer's installation instructions. Manufacturer's Recommendation: See Notes 3-8.	
D	Vertical clearance to a ventilated soffit located above the terminal within a horizontal distance of 2 feet (61 cm) from the centerline of the terminal		
E	Clearance to an unventilated soffit		
F	Clearance to an outside corner		
G	Clearance to an inside corner		
H	Clearance to each side of the centerline extended above electrical meter or gas service regulator assembly	3 ft. (.9 M) within 15 ft. (4.6 M) above the meter/regulator assembly.	3 ft. (.9 M) within 15 ft. (4.6 M) above the meter/regulator assembly.
I	Clearance to service regulator vent outlet	3ft. (.9 M)	See Note 4.
J	Clearance to non—mechanical air supply inlet to building or the combustion air inlet to any other appliance	12 in. (305 mm) for appliances >10,000 Btuh(3 kW) and </= 100,000 BTUh (30 kW), 36 in. (914 mm) for appliances >100,000 BTUh (30 kW)	4ft. (1.2M) below or to the side of the opening, 1 ft (.3M) above the opening. Manufacturer's Recommendation: See Note 8
K	Clearance to a mechanical air supply inlet	6 ft. (1.8 M)	3ft. (.9 M) above if within 10 ft. (3 M) horizontally
L	Clearance under a veranda, porch, deck, or balcony	12 in. (305 mm). Permitted only if veranda, porch, deck, or balcony is fully open on a minimum of two sides beneath the floor.	See Note 4. Manufacturer's Recommendation: See Notes 3-8.
M	Clearance to each side of the centerline extended above or below vent terminal of the furnace to a dryer or water heater vent, or other appliance's direct vent intake or exhaust	12 in. (305 mm)	12 in. (305 mm)
N	Clearance to a moisture exhaust duct (dryer vent, spa exhaust, etc.)	12 in. (305 mm) See Note 4	12 in. (305 mm) See Note 4
0	Clearance from a plumbing vent stack	3 ft. (.9 M)	3 ft. (.9 M)
P	Clearance above or adjacent to paved sidewalk or paved driveway located on public property	7 ft. (2.1 M). Vent shall not terminate above or adjacent to a sidewalk or paved driveway that is located between two single-family dwellings and serves both dwellings.	7ft. (2.1M)

> greater than, ≥ greater than or equal to, < less than, ≤ less than or equal to

NOTE:

1. In accordance with the current CAN/CSA B149.1, Natural Gas and Propane Installation Code.
2. In accordance with the current ANSI Z223.1/NFPA 54, National Fuel Gas Code
3. **NOTE: This table is based upon National codes for gas appliances, and are provided as a reference.**
   Refer to Local codes which may supersede these standards and/or recommendations.
4. For clearances not specified in ANSI Z223.1/NFPA 54 or CAN/CSA B 149.1, clearances shall be in accordance with local installation codes and the requirements of the gas supplier and the manufacturer's installation instructions.
5. When locating vent terminations, consideration must be given to prevailing winds, location, and other conditions which may cause recirculation of the combustion products of adjacent vents. Recirculation can cause poor combustion, inlet condensation problems, vent termination icing, and/or accelerated corrosion of the heat exchangers.
6. Design and position vent outlets to avoid ice build-up on and moisture damage to surrounding surfaces.
7. The vent for this appliance shall not terminate:
   a. Near soffit vents of crawl space vents or other areas where condensate or vapor could create a nuisance or hazard or property damage; or
   b. Where condensate vapor could cause damage or could be detrimental to the operation of regulators, relief valves, or other equipment.
8. These National standards apply to all non-direct-vent gas appliances. Contact Local code officials for additional requirements and/or exclusions.

⚠ WARNING

CARBON MONOXIDE POISONING HAZARD

Failure to follow the instructions outlined below for each appliance being placed into operation could result in carbon monoxide poisoning or death.

The instructions included with this furnace **DO NOT APPLY** to vent systems that are located below the furnace. **CAREFULLY FOLLOW THE INSTRUCTIONS PROVIDED WITH THE EXTERNAL VENT TRAP KIT FOR LAYING OUT THE VENTING SYSTEM AND THE DRAIN SYSTEM** when all or part of the venting system is placed below the furnace.

Proper configuration of the venting and drain system is critical when placing all or part of the venting system below the level of the furnace. **VENT GASSES COULD BE RELEASED FROM THE DRAINAGE SYSTEM** if the instructions provided with the External Vent Trap Kit are not followed.

NOTE: The vent for this appliance must not terminate over public walkways; or near soffit vents or crawl space vents or other areas where condensate or vapor could create a nuisance or hazard or cause property damage; or where condensate vapor could cause damage or could be detrimental to the operation of regulators, relief valves, or other equipment.

Locating the Vent Termination

General

NOTE: Termination Requirements for the Provinces of Alberta and Saskatchewan are located in Non-Direct Vent / 1-Pipe System on p37 and Fig. 49.

Combustion-air inlet pipe (direct vent/2-pipe system only) and vent pipe must terminate outside structure, either through sidewall or roof.

Special termination requirements may be required in other Canadian provinces. Refer to the authority having jurisdiction for clarification and/or additional clearance requirements.

For vent termination clearance, references to National codes are shown in Fig. 43 for Direct Vent/2-Pipe system and Fig. 44 for Ventilated Combustion Air/Non-direct Vent/1-Pipe system. For exterior termination arrangements, refer to Fig. 40 for Direct Vent/2-Pipe system and Fig. 41 for Ventilated Combustion Air/Non-Direct/1-Pipe system. Contact Local code authorities for other requirements to and/or exemptions from the National codes shown in the figures.

Roof termination is the recommended termination location. Roof terminations provide better performance against sustained prevailing winds. The roof location is preferred since the vent and combustion air system is less susceptible to damage or contamination. The termination is usually located away from adjacent structures or other obstacles such as inside corners, windows, doors or other appliances. It is less prone to icing conditions, and it often has less visible vent vapors.

Sidewall terminations may require sealing or shielding of building surfaces with a corrosive resistance material due to the corrosive properties of combustion products from the vent system, as well as protection of adjacent structures.

⚠ NOTICE

RECOMMENDED SUPPORT FOR VENT TERMINATIONS

It is recommended that sidewall vent terminations in excess of 24" (0.6 M) or rooftop terminations in excess of 36" (1 M) in vertical length be supported by **EITHER** the Direct Vent Termination Kit shown in Table 13 or by field-supplied brackets or supports fastened to the structure.

When determining appropriate location for termination, consider the following guidelines:

1. Comply with all clearance requirements stated in Fig. 43 or Fig. 44 per application.
2. The vent termination must be located at least 3 feet from an inside corner and follow the clearance distances in the Inside Corner Termination drawing. See Fig. 42.
3. Termination or termination kit should be positioned where vent vapors will not damage plants/shrubs, air conditioning equipment or utility meters.
4. Do not locate termination directly into prevailing winds. Termination should be positioned so that it will not be affected by sustained prevailing winds over 30 mph, wind eddy, such as inside building corners, or by recirculation of flue gases, airborne leaves, or light snow.
5. Termination or termination kit should be positioned where it will not be damaged by or subjected to foreign objects such as stones, balls, etc.
6. Termination or termination kit should be positioned where vent vapors are not objectionable.

Direct Vent / 2-Pipe System

Direct vent (2-pipe) vent and combustion air pipes must terminate outside the structure. See Fig. 43 For references to vent clearances required by National code authorities. Allowable vent and combustion air terminations are shown in Fig. 40.

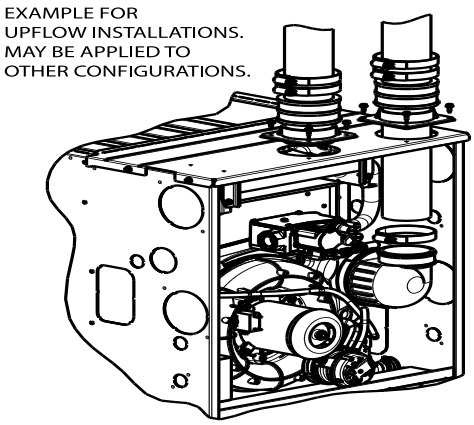

A12220

Fig. 45 – Sample Inlet Air Pipe Connection for Polypropylene Venting Systems

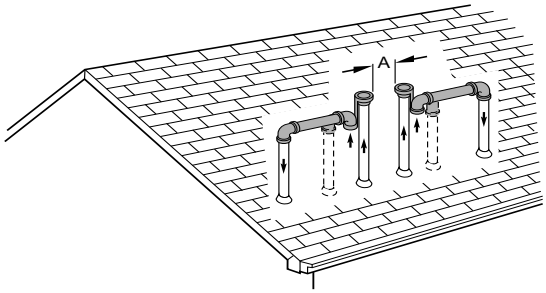

A96128

Fig. 46 – Pipe Vent and Combustion

Ventilated Combustion Air

The vent pipe for a Ventilated Combustion Air System must terminate outdoors. See Fig. 44 for references to vent clearances required by National code authorities. Allowable vent terminations are shown in Fig. 41. The combustion air pipe terminates in a well-ventilated attic or crawl space. Follow the clearances as shown in Fig. 48.

The combustion air pipe cannot terminate in attics or crawl spaces that use ventilation fans designed to operate in the heating season. If

ventilation fans are present in these areas, the combustion air pipe must terminate outdoors as a Direct Vent System.

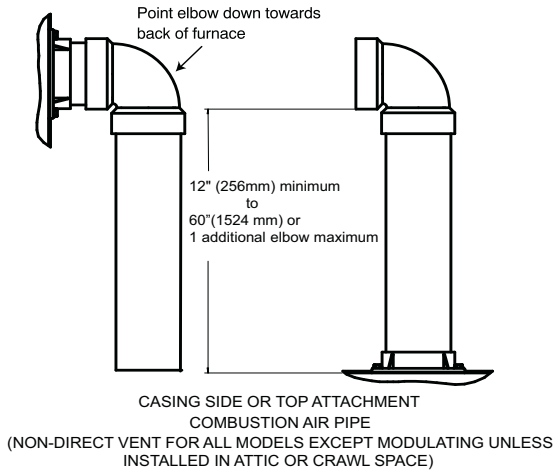

Fig. 47 – Combustion Air Pipe Attachment

Non-Direct Vent / 1-Pipe System

The vent pipe for a Non Direct Vent (1-pipe) system must terminate outdoors. See Fig. 44 for references to vent clearances required by National Code authorities. Allowable vent terminations are shown in Fig. 41.

A combustion air inlet pipe to the outdoors is not required for a Non-Direct (single-pipe) Vent System. A 12-in. long section of pipe with a tight radius 2-in. (51 mm) 90 degree elbow is required to be attached to the furnace. See Fig. 49. This short inlet air pipe helps to ensure stable combustion, as well as allow for sound attenuation. To aid sound attenuation, point the inlet air pipe away from occupants. An extra elbow and/or five feet of pipe may be used to accomplish the sound attenuation function.

⚠ WARNING

CARBON MONOXIDE POISONING HAZARD

Failure to follow the instructions outlined below for each appliance being placed into operation could result in carbon monoxide poisoning or death.

For all venting configurations for this appliance and other gas appliances placed into operation for the structure, provisions for adequate combustion, ventilation, and dilution air must be provided in accordance with:

U.S.A. Installations: section 9.3 of current edition of NFPA 54/ANSI Z223.1 Air for Combustion and Ventilation and applicable provisions of the local building codes.

Canadian Installations: Part 8 of current edition of CAN/CSA-B149.1. Venting Systems and Air Supply for Appliances and all authorities having jurisdiction.

NOTE: Termination Requirements for the Provinces of Alberta and Saskatchewan

The Provinces of Alberta and Saskatchewan require a minimum unobstructed distance of 4 ft. (1.2 M) from the foundation to the property line of the adjacent lot for vent termination of any appliance with an input over 35,000 BTUh. If there is less than 4 ft. (1.2 M) of unobstructed distance to the property line of the adjacent lot, no type of vent termination is permitted for appliances with inputs greater than 35,000 BTUh.

There are no additional restrictions on unobstructed distances greater than 8 ft. (2.4 M). All single, two-pipe and concentric vents may be used, providing all other Code and manufacturer's requirements in these instructions are adhered to. Refer to the appropriate **Vent Termination** section above for locating the vent termination

If the unobstructed distance from the foundation to the property line of the adjacent lot is no less than 4 ft. (1.2 M) and no greater than 8 ft. (2.4 M), it will be necessary to re-direct the flue gas plume. In this situation, a concentric vent kit cannot be used. A 2-pipe termination (or single pipe termination when permitted) that re-directs the flue gas away by use of an elbow or tee, certified to ULC S636 from the adjacent property line must be used. See Fig. 49.

The concentric vent kit currently cannot be modified to attach an elbow to the vent portion of the rain cap. A tee attached to the rain cap could potentially direct the flue gas plume toward the intake air stream and contaminate the incoming combustion air for the furnace.

Refer to Fig. 49 for terminations approved for use in Alberta and Saskatchewan.

Size the Vent and Combustion Air Pipes

General

Furnace combustion air and vent pipe connections are sized for 2-in. (50 mm ND) PVC/ABS DWV pipe. The combustion air and vent pipe connections also accommodate 60 mm polypropylene venting systems with outside diameters of approximately 60 mm (2-3/8 inches). Any pipe diameter change should be made outside furnace casing in vertical pipe. Any change in diameter to the pipe must be made as close to the furnace as reasonably possible. See Fig. 50.

The Maximum Vent Length for the vent and combustion air pipe (when used) is determined from the Maximum Equivalent Vent Length in Table 15 minus the number of fittings multiplied by the deduction for each type of fitting used from Table 16.

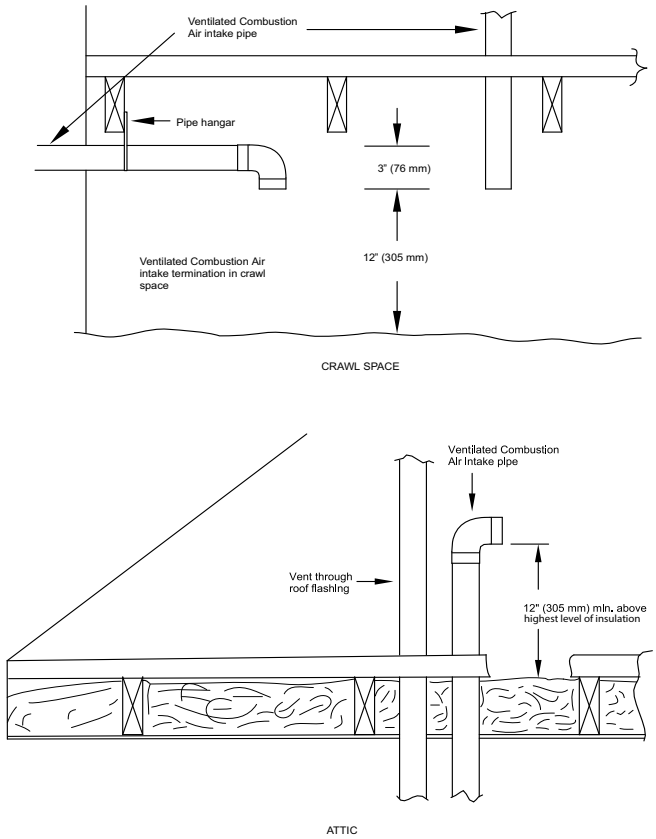

Fig. 48 – Vent Terminations for Ventilated Combustion Air

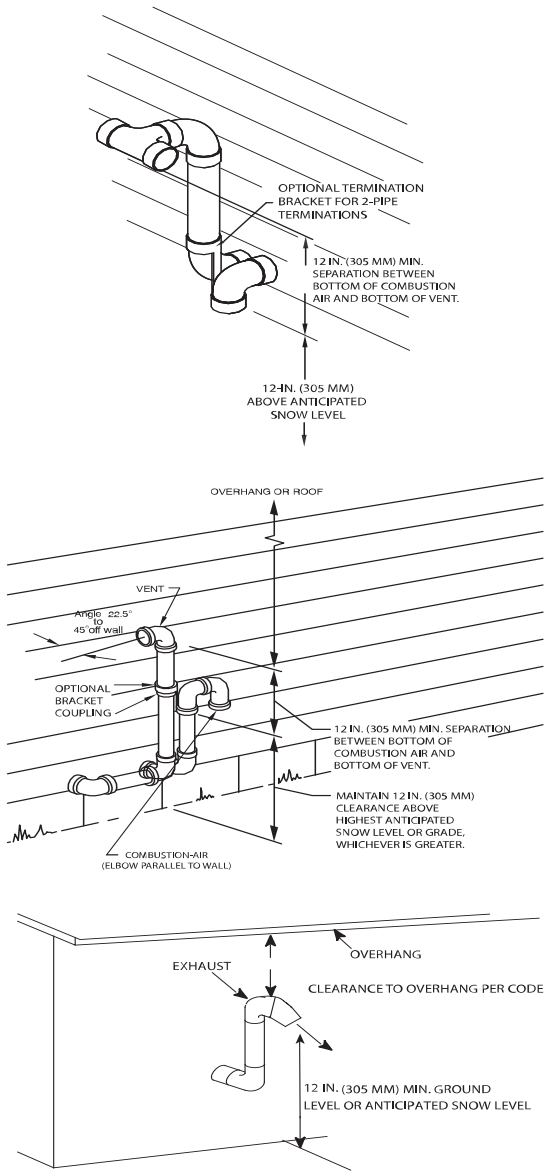

Fig. 49 – Alberta and Saskatchewan Vent Termination A13078A

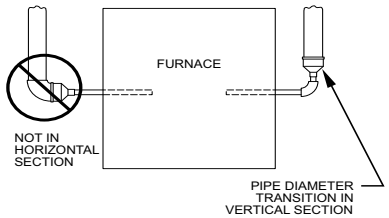

Fig. 50 – Combustion Air and Vent Pipe Diameter Transition Location and Elbow Configuration A93034

Recommended Combustion Air Inlet Moisture Trap

NOTICE

OPTIONAL CONFIGURATION FOR COMBUSTION AIR INLET PIPE

In applications where there is a risk of excessive moisture entering the combustion air inlet pipe, a moisture trap may be added to the inlet pipe to help prevent moisture from entering the furnace from the combustion air inlet pipe. See Fig. 51.

When sizing venting systems, the equivalent length of the optional moisture trap (15 feet/5 M) must be taken into account.

Recommended to prevent moisture from trickling into the furnace vestibule, a trap can be installed in the intake air pipe near the furnace. To prevent moisture, connecting a drain line to the trap is recommended as trace amounts of moisture will evaporate into the intake air stream. If the combustion air inlet is located near a moisture exhaust duct, or there are other concerns of excessive moisture being drawn into the combustion air inlet, it is encouraged to connect a drain line to the trap.

The trap can be constructed from a running tee of the same diameter of the intake air pipe with **EITHER** a removable cap attached to a 6-inch long pipe connected to the tee or the External Vent Trap Kit to help prevent contaminants from entering the furnace. See Fig. 51.

The External Vent Trap Kit accessory may be used as a trap for the combustion air inlet pipe if a large amount of moisture must be removed. The drain line may be connected to the same drain as the furnace condensate and the evaporator coil condensate line **ONLY** if the inlet air trap drain and the evaporator coil drain empty into an open segment of pipe above the drain. See Fig. 12. When using the External Vent Trap Kit, refer to those instructions for proper drain connections.

The tee may also be connected to the intake air pipe on the side of the casing. See Fig. 51.

In any configuration, it will be necessary to add the equivalent length of the tee (15 feet/5 M) to the Total Equivalent Vent Length of the venting system.

NOTICE

ADDITIONAL INFORMATION FOR POLYPROPYLENE VENTING SYSTEMS

Polypropylene venting systems include flexible vent pipe. These flexible vent pipes have a different equivalent vent length than straight sections of PVC/ABS DWV vent pipe. Be sure to make the appropriate deductions from the Maximum Equivalent Vent Length (MEVL), or additions to the Total Equivalent Vent Length (TEVL), when applying flexible vent pipes in polypropylene venting systems. See the polypropylene vent system manufacturer's installation instructions for details.

When using metric-sized venting systems, use these equivalencies for obtaining the proper MEVL from the Tables:

- Use 2" Vent Tables for 60 mm (o.d.) vent systems
- Use 3" Vent Tables for 80 mm (o.d.) vent systems
- Use 4" Vent Tables for 100 mm (o.d.) vent systems

The measured length of pipe used in a single or 2-pipe termination is included in the total vent length. Include deductions from the Maximum Equivalent Vent Length (MEVL) contained in the Venting Tables for elbows and flexible vent pipe. Factory accessory concentric vent terminations or pipe lengths and elbows used for "standard" vent terminations do not require a deduction from the Maximum Equivalent Vent Length. See vent termination figures associated with Table 15. Include a deduction for a Tee when used for Alberta and Saskatchewan terminations.

NOTE: Polypropylene venting systems MAY require additional deductions from the MEVL, or additions to the TEVL, for vent terminations and flexible pipe sections. See the polypropylene venting system manufacturer's instructions for details on equivalent lengths of vent terminations and flexible vent pipes, and for calculating total vent lengths.

To calculate the Total Equivalent Vent Length (TEVL) of the venting system:

1. Measure the individual distance from the furnace to the termination for each pipe.
2. Count the number of elbows for each pipe.

3. For each pipe, multiply the number of elbows by the equivalent length for the type of elbow used. Record the equivalent length of all the elbows for each pipe.
4. If a Tee is used on the termination (Alberta and Saskatchewan, when required) record the equivalent length of the Tee used.
5. Calculate Total Equivalent Vent Length by adding the equivalent lengths of the fittings to the lengths of the individual vent and combustion air pipes.

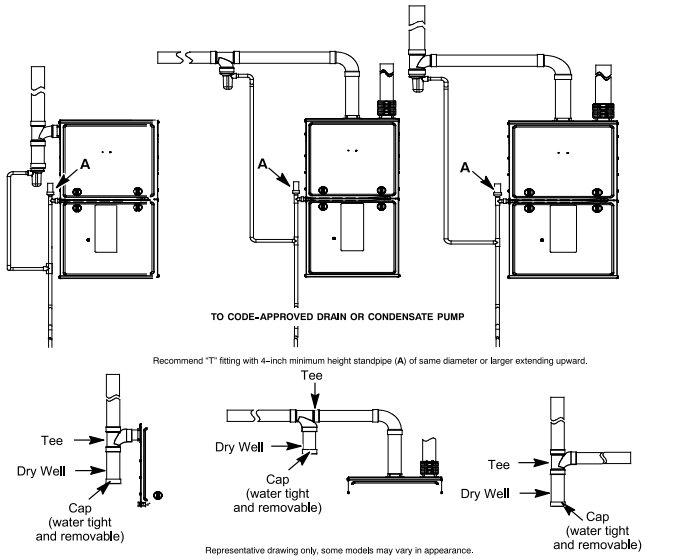

A170122A

Fig. 51 – Recommended Combustion Air Inlet Moisture Trap

6. When using polypropylene venting systems with flexible vent pipes, perform adjustments for the equivalent length of the flexible vent pipe to the calculated total equivalent venting system length. See the polypropylene vent system manufacturer's instructions for details.
7. Select a diameter of vent pipe from Table 15 and note the Maximum Equivalent Vent Length (MEVL) shown for that application for that specific furnace input size. Compare the Total Equivalent Vent Length (TEVL) to the MEVL:
8. If the Total Equivalent Vent Length is ***shorter*** than the Maximum Equivalent Vent Length for the diameter of pipe chosen, then that diameter of pipe selected may be used.
9. If the Total Vent Length is ***longer*** than the Maximum Equivalent Vent Length for the diameter of pipe chosen, that diameter pipe MAY NOT be used for venting the furnace. Try the next larger diameter pipe.

NOTE: If the calculated Total Equivalent Vent Lengths results in different diameter pipes for the vent and combustion air, select the larger diameter for both pipes.

NOTE: If the Maximum Vent Length for diameter of the pipe selected is longer than the measured length and the equivalent length of all the fittings and terminations (TEVL), recalculate Total Equivalent Vent Length using the next smaller diameter. If the Maximum Equivalent Vent Length is still longer than the longer TEVL of the vent pipe or combustion air pipe, then that diameter of pipe selected may be used.

When installing vent systems pipe lengths of 10 ft. (3 M) or less, use the smallest allowable pipe diameter. Using a pipe size greater than required for short venting systems may result in loss of efficiency, incomplete combustion, flame disturbance, or flame sense lockout.

For vent systems longer than 10 ft. (3 M), any larger diameter vent pipe shown in Table 15 **FOR THAT SIZE FURNACE** may be used.

Table 15 – Maximum Equivalent Vent Length

NOTE: Maximum Equivalent Vent Length (MEVL) includes standard and concentric vent termination and does NOT include elbows. Use Table 16 - Deductions from Maximum Equivalent Vent Length to determine allowable vent length for each application.

Single Stage 92% - Feet																				
Unit Size		40,000 *			60,000 †				80,000					100,000 ‡				120,000 ‡		
	Pipe Dia. (in)	1 ½	2	2 ½	1 ½	2	2 ½	3	1 ½	2	2 ½	3	4	2	2 ½	3	4	2 ½	3	4
Altitude (feet)	0-2000	20	85	185	20	100	175	200	15	55	130	175	200	20	80	175	200	10	75	185
	2001-3000	15	80	175		95	165	185	10	49	125	165	185	15	75	165	185		70	175
	3001-4000		70	160	16	90	155	175			115	155	175			155	175	5	65	165
	4001-4500	10		155	15	85	150	170		44	110	150	165	10	70		170	N/A	60	160
	4501-5000			145		80		165				145	160		65	150	165			
	5001-6000		60	130		75	140	155		41	100	135	150			140	155			155
	6001-7000	5	55	120	13	70	130	145	N/A	38	90	125	140		60	135	145		50	140
	7001-8000		50	110	10	65	120	135		36		120	125	N/A	55	125	135		46	130
	8001-9000	N/A	30	95	5	60	115	125		33	80	110	115		50	115	125		43	120
	9001-10000		25	85	N/A	55	105	115		30	75	100	105		45	100	115		39	115
Single Stage 92% - Meters																				
Unit Size		40,000 *			60,000 †				80,000					100,000 ‡				120,000 ‡		
Altitude (meters)	Pipe Dia. (mm)	38	51	64	38	5	64	76	38	51	64	76	102	51	64	76	102	64	76	102
	0-610	6.0	25.9	56.3	6.0	30.4	53.3	60.9	4.5	16.7	39.6	53.3	60.9	6.0	24.3	53.3	60.9	3.0	22.8	56.3
	611-914	4.5	24.3	53.3		28.9	50.2	56.3	3.0	14.9	38.1	50.2	56.3	4.5	22.8	50.2	56.3		21.3	53.3
	915-1219		21.3	48.7	4.8	27.4	47.2	53.3			35.0	47.2	53.3		0.0	47.2	53.3	1.5	19.8	50.2
	1220-1370	3.0		47.2	4.5	25.9	45.7	51.8		13.4	33.5	45.7	50.2	3.0	21.3		51.8	N/A	18.2	48.7
	1371-1524			44.1		24.3		50.2			0.0	44.1	48.7		19.8	45.7	50.2			
	1525-1829		18.2	39.6		22.8	42.6	47.2		12.4	30.4	41.1	45.7		0.0	42.6	47.2			47.2
	1830-2134	1.5	16.7	36.5	3.9	21.3	39.6	44.1	N/A	11.5	27.4	.1	42.6		18.2	41.1	44.1		15.2	42.6
	2135-2438		15.2	33.5	3.0	19.8	36.5	41.1		10.9	0.0	36.5	38.1	N/A	16.7	38.1	41.1		14.0	39.6
	2439-2743	N/A	9.1	28.9	1.5	18.2	35.0	38.1		10.0	24.3	33.5	35.0		15.2	35.0	38.1		13.1	36.5
	2744-3048		7.6	25.9	N/A	16.7	32.0	35.0		9.1	22.8	30.4	32.0		13.7	30.4	35.0		11.8	35.0

*. 40K Inducer Outlet Restrictor disk (P/N 337683-401; 1.25-in. (32 mm) Dia.) shipped in the loose parts bag or available through Replacement Components is required for all orientations for installations from 0–2000 ft. (0–610 M) above sea level and where TEVL is no greater than 10 ft. (3 M). Failure to use an outlet restrictor may result in flame disturbances or flame sense lockout.

†. 60K Inducer Outlet Restrictor disk (P/N 337683-401; 1.25-in. (32 mm) Dia.) available through Replacement Components is required in downflow orientations for installations from 0–2000 ft. (0–610 M) above sea level and where TEVL is no greater than 5 ft. (1.5 M).

‡. 100K / 120K Inducer Outlet Restrictor disk (P/N 337683-402; 1.50-in. (38 mm) Dia.) available through Replacement Components is required in downflow orientations for installations from 0–2000 ft. (0–610 M) above sea level and where TEVL is no greater than 5 ft. (1.5 M).

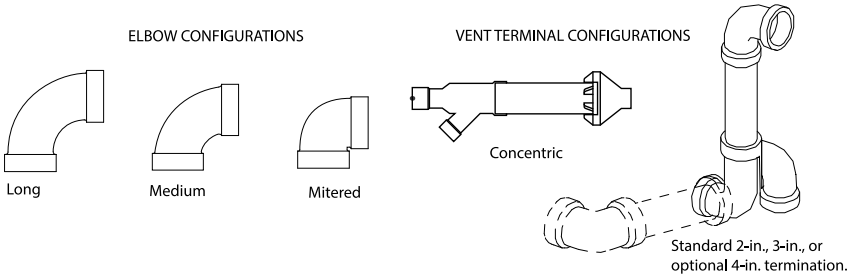

A13110

Table 16 – Deductions from Maximum Equivalent Vent Length - Ft. (M)

Pipe Diameter (in):	1-1/2		2		2-1/2		3		4	
Mitered 90º Elbow	8	(2.4)	8	(2.4)	8	(2.4)	8	(2.4)	8	(2.4)
Medium Radius 90º Elbow	5	(1.5)	5	(1.5)	5	(1.5)	5	(1.5)	5	(1.5)
Long Radius 90º Elbow	3	(0.9)	3	(0.9)	3	(0.9)	3	(0.9)	3	(0.9)
Mitered 45º Elbow	4	(1.2)	4	(1.2)	4	(1.2)	4	(1.2)	4	(1.2)
Medium Radius 45º Elbow	2.5	(0.8)	2.5	(0.8)	2.5	(0.8)	2.5	(0.8)	2.5	(0.8)
Long Radius 45º Elbow	1.5	(0.5)	1.5	(0.5)	1.5	(0.5)	1.5	(0.5)	1.5	(0.5)
Tee	16	(4.9)	16	(4.9)	16	(4.9)	16	(4.9)	16	(4.9)

1. Use only the smallest diameter pipe possible for venting. Over-sizing may cause flame disturbance or excessive vent terminal icing or freeze-up.
2. NA - Not allowed. Pressure switch will not close, or flame disturbance may result.
3. Vent sizing for Canadian installations over 4500 ft. (1370 M) above sea level are subject to acceptance by the local authorities having jurisdiction.
4. Size both the combustion air and vent pipe independently, then use the larger size for both pipes.
5. Assume the two 45° elbows equal one 90° elbow. Wide radius elbows are desirable and may be required in some cases.
6. Elbow and pipe sections within the furnace casing and at the vent termination should not be included in vent length or elbow count.
7. The minimum pipe length is 5 ft. (2 M) linear feet (meters) for all applications.
8. Use 3-in. (76 mm) diameter vent termination kit for installations requiring 4-in. (102 mm) diameter pipe.
9. A running Tee in the Combustion Air Pipe adds 0 ft. to the TEVL of the vent length.

Combustion Air and Vent Piping Insulation Guidelines

NOTE: Use closed cell, neoprene insulation or equivalent.

The vent pipe may pass through unconditioned areas. The amount of exposed pipe allowed is shown in Table 17.

1. Using winter design temperature (used in load calculations), find appropriate temperature for your application and furnace model.
2. Determine the amount of total and exposed vent pipe.
3. Determine required insulation thickness for exposed pipe length(s).
4. When combustion air inlet piping is installed above a suspended ceiling, the pipe **MUST** be insulated with moisture resistant insulation such as Armaflex or other equivalent type of insulation.
5. Insulate combustion air inlet piping when run in warm, humid spaces.
6. Install the insulation per the insulation manufacturer's installation instructions.

NOTE: Pipe length (ft. / M) specified for maximum pipe lengths located in unconditioned spaces cannot exceed total allowable pipe length as calculated from Table 15.

Configure the Furnace

⚠ WARNING

CARBON MONOXIDE POISONING HAZARD

Failure to follow this warning could result in personal injury or death.

To route the vent pipe and combustion air pipe through the furnace, the manufacturer supplied kit must be used. Failure to properly seal the blower compartment from the furnace vestibule could result in the circulation of carbon monoxide throughout the structure. The vent pipe and combustion air pipe must be a continuous pipe while passing through the blower compartment. Seals supplied in this kit must be installed per the instructions provided. Follow all procedures outlined in these instructions.

Near Furnace Vent Connections

Offsets in the vertical portion of the vent pipe should be made with 45° elbows instead of 90° elbows. Short horizontal runs of vent pipe are difficult to pitch correctly and may trap water in the vent pipe.

Trapped water in the vent pipe may result in nuisance pressure switch tripping.

Install the Vent and Combustion Air Pipes

With the furnace installed in the required position, remove the desired knockouts or plugs from the casing. It will be necessary to remove one knockout or plug for the vent pipe and the other knockout or plug for the combustion air connection. See Fig. 15.

The vent elbow can be rotated to the required location on the casing if necessary. See Fig. 53. To rotate the vent elbow:

1. Loosen the clamp on the inlet of the vent elbow attached to the inducer.
2. Rotate the vent elbow to the required position. There are rounded notches on the vent elbow to align it with the inducer housing for each orientation.

3. Tighten the clamp around the vent elbow. Torque the clamp to 15 lb-in. See Fig. 54 - Fig. 57.

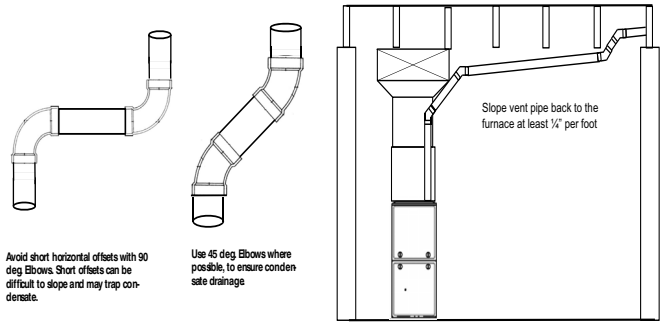

A14546

Fig. 52 – Near Furnace Vent Connections

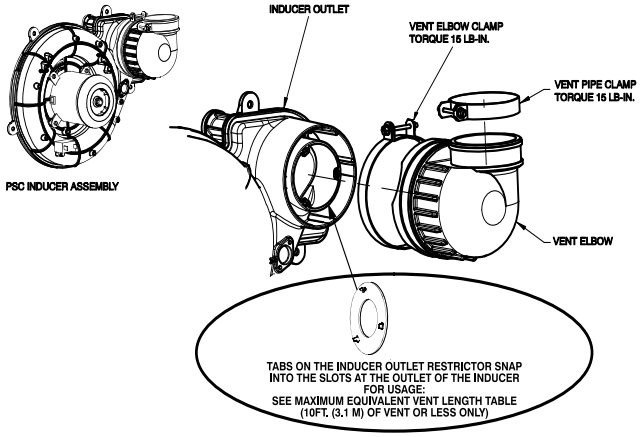

A170006

Fig. 53 – Inducer Vent Elbow

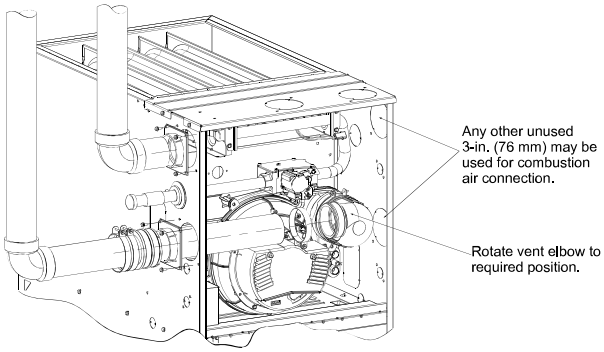

A230010

Representative drawing only, some models may vary.

UPFLOW LEFT CONFIGURATION

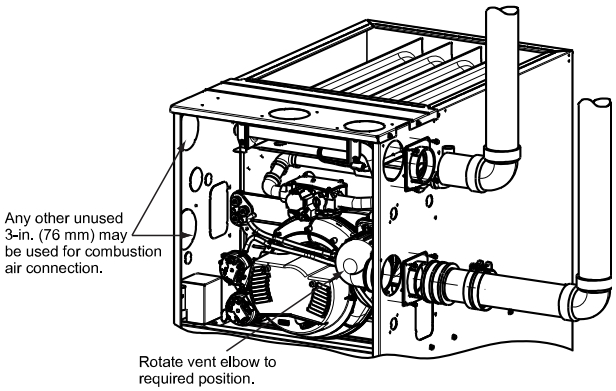

A230009

Representative drawing only, some models may vary.

UPFLOW RIGHT CONFIGURATION

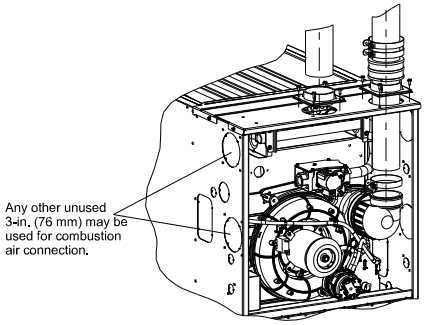

A230011

Representative drawing only, some models may vary.

UPFLOW VERTICAL VENT

Fig. 54 – Upflow Configurations (Appearance may vary) See "Notes for Venting Options"

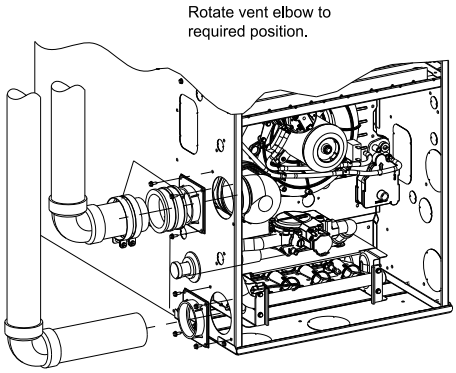

A11311A

Representative drawing only, some models may vary.

DOWNFLOW LEFT CONFIGURATION

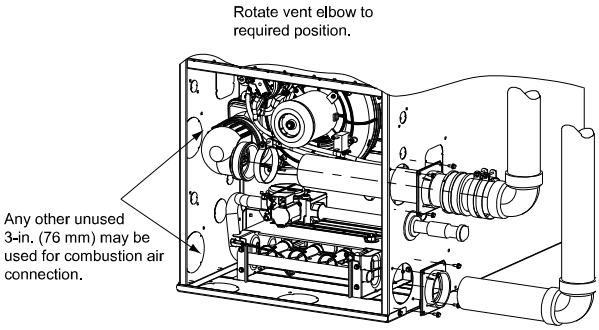

A230013

Representative drawing only, some models may vary.

DOWNFLOW RIGHT CONFIGURATION

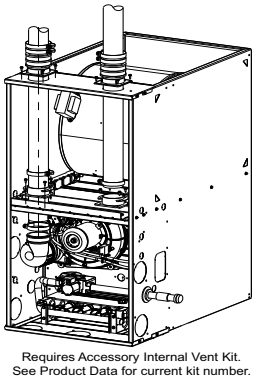

A11313A

Representative drawing only, some models may vary.

DOWNFLOW VERTICAL

Fig. 55 – Downflow Configurations (Appearance may vary) See "Notes for Venting Options"

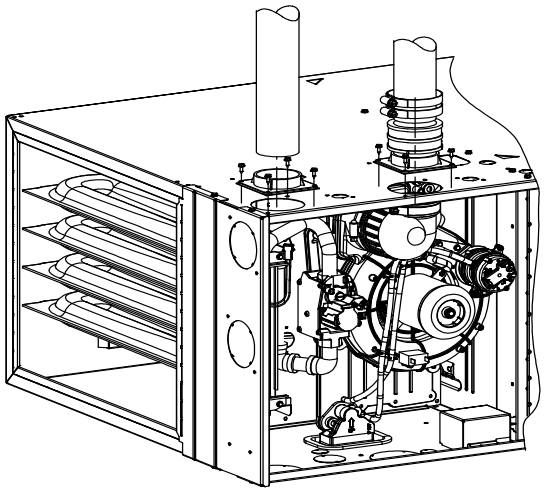

A11327A

Representative drawing only, some models may vary.

HORIZONTAL LEFT-VERTICAL VENT CONFIGURATION

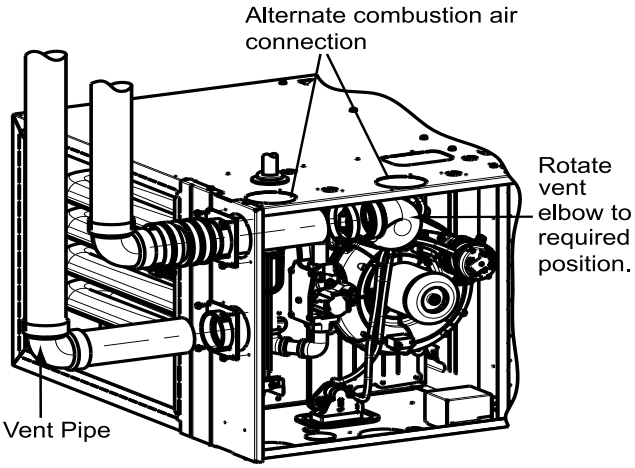

A11328A

Representative drawing only, some models may vary.

HORIZONAL LEFT-LEFT VENT CONFIGURATION

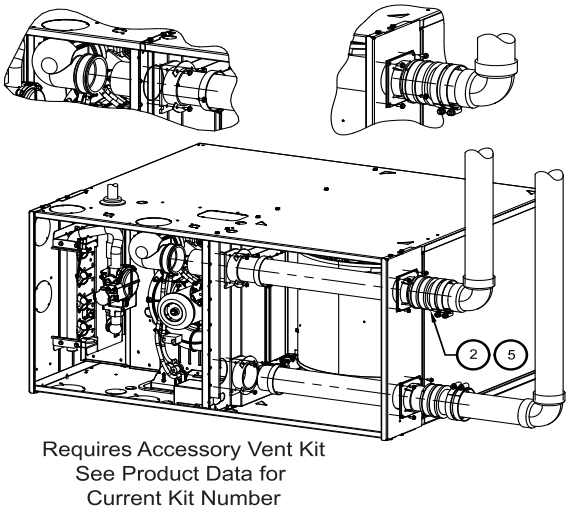

A11329A

Representative drawing only, some models may vary.

HORIZONTAL LEFT-RIGHT VENT CONFIGURATION

Fig. 56 – Horizontal Left (Appearance may vary)
See "Notes for Venting Options"

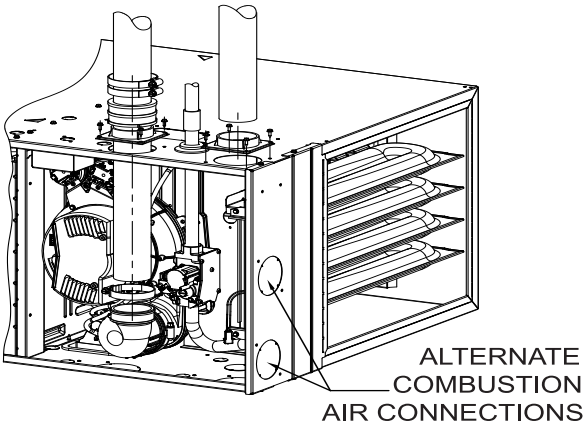

A11337

Representative drawing only, some models may vary.

HORIZONTAL RIGHT-VERTICAL VENT CONFIGURATION

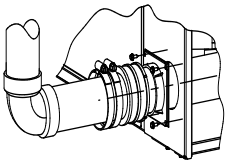

Additional coupling required from transition to polypropylene piping.

A11336

Representative drawing only, some models may vary.

HORIZONTAL RIGHT-LEFT VENT CONFIGURATION

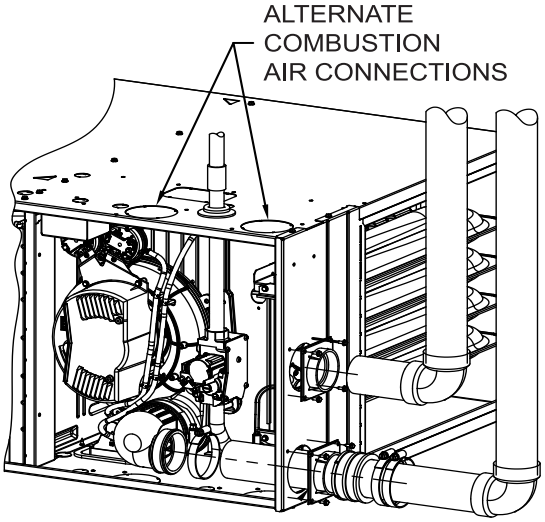

A11335

Representative drawing only, some models may vary.

HORIZONTAL RIGHT-RIGHT VENT CONFIGURATION

Fig. 57 – Horizontal Right (Appearance may vary)
See "Notes for Venting Options"

Notes for venting options

1. Attach vent pipe adapter with gasket to furnace casing.
2. Align notches in rubber coupling over standoffs on adapter. Slide clamps over the coupling.
3. Slide vent pipe through adapter and coupling into vent elbow.
4. Insert vent pipe into vent elbow.
5. Torque all clamps 15 lb.-in.
6. Attach combustion air pipe adapter with gasket to furnace.
7. Attach combustion air pipe to adapter with silicone. Pilot drill a 1/8-in. hole in adapter and secure with a #7 x 1/2-in. sheet metal screw.

Table 17 – Maximum Allowable Exposed Vent Lengths in Unconditioned Space Table - Ft.

Winter Design Temp °F	Unit Size	40,000* BTUH									60,000 BTUH											
		Uninsulated			3/8-in. Insulation			1/2-in. Insulation			Uninsulated				3/8-in. Insulation				1/2-in. Insulation			
	Pipe Dia. in.	1 ½	2	2 ½	1 ½	2	2 ½	1 ½	2	2 ½	1 ½	2	2 ½	3	1 ½	2	2 ½	3	1 ½	2	2 ½	3
	20	20	20	20	20	50	45	20	60	50	20	30	30	25	20	75	65	60	20	85	75	65
	0	10	5	5	20	25	20	20	30	25	15	15	10	10	20	40	30	25	20	45	40	30
	-20	5			20	15	10	20	20	15	10	5			20	25	20	15	20	30	25	20
	-40				15	10	5	15	15	10	5				20	15	15	10	20	20	15	10

Winter Design Temp °F	Unit Size	80,000 BTUH														
		Uninsulated					3/8-in. Insulation					1/2-in. Insulation				
	Pipe Dia. in.	1 ½	2	2 ½	3	4	1 ½	2	2 ½	3	4	1 ½	2	2 ½	3	4
	20	15	40	40	35	30	15	50	90	75	65	15	50	70	70	70
	0	15	20	15	10	5	15	50	45	35	30	15	50	50	40	35
	-20	15	10	5			15	35	30	20	15	15	40	30	25	15
	-40	10	5				15	25	20	15	5	15	30	25	20	10

Winter Design Temp °F	Unit Size	100,000 BTUH											
		Uninsulated				3/8-in. Insulation				1/2-in. Insulation			
	Pipe Dia. in.	2	2 ½	3	4	2	2 ½	3	4	2	2 ½	3	4
	20	20	50	40	35	20	80	95	80	20	80	105	90
	0	20	20	15	10	20	55	45	35	20	65	55	45
	-20	15	10	5		20	35	30	20	20	45	35	25
	-40	10	5			20	25	20	10	20	30	25	15

Winter Design Temp °F	Unit Size	120,000 BTUH									140,000 BTUH								
		Uninsulated			3/8-in. Insulation			1/2-in. Insulation			Uninsulated			3/8-in. Insulation			1/2-in. Insulation		
	Pipe Dia. in.	2 ½	3	4	2 ½	3	4	2 ½	3	4	2 ½	3	4	2 ½	3	4	2 ½	3	4
	20	10	50	40	10	75	95	10	75	105	5	55	50	5	65	105	5	65	125
	0	10	20	15	10	55	45	10	65	50	5	25	15	5	65	50	5	65	60
	-20	10	10		10	35	25	10	45	30	5	10	5	5	45	30	5	50	40
	-40	10	5		10	25	15	10	30	20	5	5		5	30	20	5	35	25

Maximum Allowable Exposed Vent Length in Unconditioned Space (Metric)

Winter Design Temp °C	Unit Size	40,000* BTUH									60,000 BTUH											
		Uninsulated			3/8-in. Insulation			1/2-in. Insulation			Uninsulated				3/8-in. Insulation				1/2-in. Insulation			
	Pipe Dia. mm	38	51	64	38	51	64	38	51	64	38	51	64	76	38	51	64	76	38	51	64	76
	-7	6.1	6.1	6.1	6.1	15.2	13.7	6.1	18.3	15.2	6.1	9.1	9.1	7.6	6.1	22.9	19.8	18.3	6.1	25.9	22.9	19.8
	-18	3.0	1.5	1.5	6.1	7.6	6.1	6.1	9.1	7.6	4.6	4.6	3.0	3.0	6.1	12.2	9.1	7.6	6.1	13.7	12.2	9.1
	-29	1.5			6.1	4.6	3.0	6.1	6.1	4.6	3.0	1.5			6.1	7.6	6.1	4.6	6.1	9.1	7.6	6.1
	-40				4.6	3.0	1.5	4.6	4.6	3.0	1.5				6.1	4.6	4.6	3.0	6.1	6.1	4.6	3.0

Winter Design Temp °C	Unit Size	80,000 BTUH														
		Uninsulated					3/8-in. Insulation					1/2-in. Insulation				
	Pipe Dia. mm	38	51	64	76	102	38	51	64	76	102	38	51	64	76	102
	-7	4.6	12.2	12.2	10.7	9.1	4.6	15.2	27.4	22.9	19.8	4.6	15.2	21.3	21.3	21.3
	-18	4.6	6.1	4.6	3.0	1.5	4.6	15.2	13.7	10.7	9.1	4.6	15.2	15.2	12.2	10.7
	-29	4.6	3.0	1.5			4.6	10.7	9.1	6.1	4.6	4.6	12.2	9.1	7.6	4.6
	-40	3.0	1.5				4.6	7.6	6.1	4.6	1.5	4.6	9.1	7.6	6.1	3.0

Winter Design Temp °C	Unit Size	100,000 BTUH											
		Uninsulated				3/8-in. Insulation				1/2-in. Insulation			
	Pipe Dia. mm	51	64	76	102	51	64	76	102	51	64	76	102
	-7	6.1	15.2	12.2	10.7	6.1	24.4	28.9	24.4	6.1	24.4	32.0	27.4
	-18	6.1	6.1	4.6	3.0	6.1	16.8	13.7	10.7	6.1	19.8	16.7	13.7
	-29	4.6	3.0	1.5		6.1	10.7	9.1	6.1	6.1	13.7	10.7	7.6
	-40	3.0	1.5			6.1	7.6	6.1	3.0	6.1	9.1	7.6	4.6

Winter Design Temp °C	Unit Size	120,000 BTUH									140,000 BTUH								
		Uninsulated			3/8-in. Insulation			1/2-in. Insulation			Uninsulated			3/8-in. Insulation			1/2-in. Insulation		
	Pipe Dia. mm	64	76	102	64	76	102	64	76	102	64	76	102	64	76	102	64	76	102
	-7	3.0	15.2	12.2	3.0	22.9	28.9	3.0	22.9	32.0	1.5	16.7	15.2	1.5	19.8	32.0	1.5	19.8	38.1
	-18	3.0	6.1	4.6	3.0	16.8	13.7	3.0	19.8	15.2	1.5	7.6	4.6	1.5	19.8	15.2	1.5	19.8	18.3
	-29	3.0	3.0		3.0	10.7	7.6	3.0	13.7	9.1	1.5	3.0	1.5	1.5	13.7	9.1	1.5	15.2	12.2
	-40	3.0	1.5		3.0	7.6	4.6	3.0	9.1	6.1	1.5	1.5		1.5	9.1	6.1	1.5	35	7.6

Installing the Vent Pipe Adapter and Combustion Air Pipe Adapter

WARNING

CARBON MONOXIDE POISONING HAZARD

Failure to follow this warning could result in personal injury or death.

DO NOT use cement to join polypropylene venting systems. Follow the polypropylene venting system manufacturer's instructions for installing polypropylene venting systems.

NOTE: The rubber coupling that attaches to the vent pipe adapter must be used. The adapter seals the vent pipe to the casing and reduces the strain on the vent elbow attached to the inducer.

1. Apply the gaskets to the vent pipe and combustion air pipe adapters. If supplied, remove and discard round center "slug" from interior of gasket. See Fig. 58.

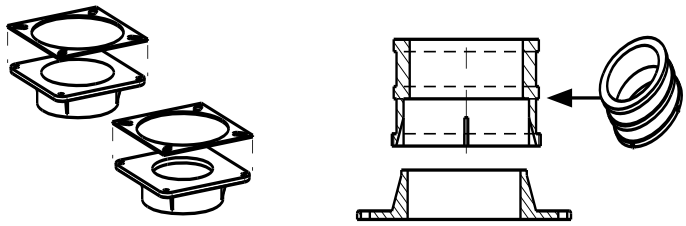

Fig. 58 – Vent Coupling and Adapter with Gaskets

NOTE: The vent pipe adapter can be distinguished from the inlet pipe adapter by the absence of an internal pipe-stopping ring. The vent pipe can pass through the vent pipe adapter; it cannot pass through the inlet pipe adapter.

2. Align the screw holes in the plastic vent pipe adapter with the dimples in the casing.

CAUTION

CARBON MONOXIDE POISONING HAZARD

Failure to follow this warning could result in personal injury or death.

To route the vent pipe and combustion air pipe through the furnace, the manufacturer supplied kit must be used. Failure to properly seal the blower compartment from the furnace vestibule could result in the circulation of carbon monoxide throughout the structure. The vent pipe and combustion air pipe must be a continuous pipe while passing through the blower compartment. Seals supplied in this kit must be installed per the instructions provided. Follow all procedures outlined in these instructions.

3. Pilot drill the screw holes for the adapter in the casing and attach the vent pipe adapter to the furnace with sheet metal screws
4. Slide the end of the rubber vent coupling with notches in it over the standoffs on the vent pipe adapter.
5. Insert a length of vent pipe through the coupling into the outlet of the vent elbow.
6. Tighten the clamp around the outlet of the vent elbow. Torque the clamp to 15 lb-in.

NOTICE

The following instructions are for PVC/ABS DWV vent piping only. DO NOT USE THESE TECHNIQUES FOR POLYPROPYLENE VENT PIPING SYSTEMS. See the polypropylene vent system manufacturer's instructions for installing polypropylene venting systems.

Install the remaining vent and combustion air pipes as shown below. It is recommended that all pipes be cut, prepared, and pre-assembled before permanently cementing any joint.

1. Working from furnace to outside, cut pipe to required length(s).
2. De-burr inside and outside of pipe.
3. Chamfer outside edge of pipe for better distribution of primer and cement.
4. Clean and dry all surfaces to be joined.
5. Check dry fit of pipe and mark insertion depth on pipe.
6. Insert the vent pipe into the vent elbow.
7. Torque clamp on vent elbow 15 lb-in.
8. Torque clamp on vent coupling 15 lb-in.
9. Insert the combustion air pipe into the adapter.
10. Pilot drill a screw hole through the adapter into the combustion air pipe and secondure the pipe to the adapter with sheet metal screws. **DO NOT DRILL INTO POLYPROPYLENE VENT PIPES.** Use an optional accessory vent coupling, if needed.
11. Seal around the combustion air pipe with silicone or foil tape. **SILICONE SEALERS MAY NOT BE APPROPRIATE FOR POLYPROPYLENE VENT SYSTEMS. SEE VENT SYSTEM MANUFACTURER'S INSTRUCTIONS.**
12. After pipes have been cut and pre-assembled, apply generous layer of cement primer to pipe fitting socket and end of pipe to insertion mark. Quickly apply approved cement to end of pipe and fitting socket (over primer). Apply cement in a light, uniform coat on inside of socket to prevent buildup of excess cement. Apply second coat. **DO NOT CEMENT POLYPROPYLENE FITTINGS.**
13. While cement is still wet, twist pipe into socket with 1/4-in. turn. Be sure pipe is fully inserted into fitting socket.
14. Wipe excess cement from joint. A continuous bead of cement will be visible around perimeter of a properly made joint.
15. Handle pipe joints carefully until cement sets.
16. Horizontal portions of the venting system shall be supported to prevent sagging. Space combustion air piping and vent piping hangars as shown in Table 18. Support pipes using perforated metal hanging strap or commercially available hangars or straps designed to support plastic pipe.

Table 18 – Hanger Spacing

Diameter	Material				
	PVC Sch 40	SDR 21 & 26	ABS	CPVC	Polypro-pylene
1 1/2-in.	3-ft.	2 1/2-ft.	3-ft.	3-ft.	3.25-ft.
38-mm	914-mm	762-mm	914-mm	914-mm	1000 mm
2-in.	3-ft.	3-ft.	3-ft.	3-ft.	3.25-ft.
51-mm	914-mm	914-mm	914-mm	914-mm	1000 mm
2 1/2-in.	3 1/2-ft.	3-ft.	3 1/2-ft.	3 1/2-ft.	3.25-ft.
64-mm	1067-mm	914-mm	1067-mm	1067-mm	1000 mm
3-in.	3 1/2-ft.	3-ft.	3 1/2-ft.	3 1/2-ft.	3.25-ft.
76-mm	1067-mm	914-mm	1067-mm	1067-mm	1000 mm
4-in.	4-ft.	3 1/2-ft.	4-ft.	4-ft.	3.25-ft.

17. Slope the vent and combustion air piping downward towards furnace. A minimum slope of at least 1/4-in. (6 mm) per linear ft.(1-in (25 mm) per 4 ft.(1.2 M)) with no sags between hangers is required. See Caution Box below.

⚠ CAUTION

FURNACE RELIABILITY HAZARD

Failure to follow this caution may result in nuisance short cycling, frozen vent termination, and/or no heat.

Slope the vent and combustion air piping downward towards furnace a minimum of 1/4-in. (6 mm) per linear ft. of pipe.

18. Complete the vent and combustion air pipe installation by connecting the concentric vent or by installing the required termination elbows as shown in Fig. 40, Fig. 41 and Fig. 49. For Ventilated Combustion Air Termination, See Fig. 48.
19. Use appropriate methods to seal openings where combustion air pipe and vent pipe pass through roof or sidewall.

⚠ WARNING

CARBON MONOXIDE POISONING HAZARD

Failure to follow this warning could result in personal injury or death.

DO NOT use cement to join polypropylene venting systems. Follow the polypropylene venting system manufacturer's instructions for installing polypropylene venting systems.

⚠ NOTICE

FOR POLYPROPYLENE VENTING SYSTEMS

When using polypropylene venting systems, all venting materials used, including the vent terminations, must be from the same manufacturer.

Installing the Vent Termination

Roof Terminations

A roof termination of any type will require a 4-in. (102 mm) flashing for a 2 in. (50 mm ND) concentric vent kit, KGAVT0701CVTor a 5-in. diameter (127 mm) flashing for a 3-in. (80 mm ND) concentric vent kit, KGAVT0801CVT. For two-pipe or single pipe vent systems, a flashing for each pipe of the required diameter will be necessary.

It is recommended that the flashing be installed by a roofer or competent professional prior to installing the concentric vent. The terminations can be installed on a flat or pitched roof.

Concentric Vent

Single or multiple concentric vent must be installed as shown in Fig. 40. Maintain the required separation distance between vents or pairs of vents as shown in Fig. 40 and all clearance shown in Fig. 43.

NOTE: Follow the instructions of the vent terminal manufacturer. These instructions are provided as a reference, only.

Cut one 4-in. (102 mm) diameter hole for 2-in. (50 mm ND) kit, or one 5-in. (127 mm) diameter hole for 3-in. (80 mm ND) kit in the desired location.

Loosely assemble concentric vent/combustion air termination components together using instructions in kit.

Slide assembled kit with rain shield **REMOVED** through hole in wall or roof flashing.

NOTE: Do not allow insulation or other materials to accumulate inside of pipe assembly when installing it through hole.

Disassemble loose pipe fittings. Clean and cement using same procedures as used for system piping. **DO NOT CEMENT POLYPROPYLENE FITTINGS.**

Two-Pipe and Single-Pipe Terminations

Single and two pipe vent must be installed as shown in Fig. 40 and Fig. 41. Maintain the required separation distance between vents or pairs of vents as shown in Fig. 40 and Fig. 41 and all clearance shown in Fig. 43 and Fig. 44.

Cut the required number of holes in the roof or sidewall for vent and (when used) combustion air pipes. Sidewall holes for two-pipe vent terminations should be side-by-side, allowing space between the pipes for the elbows to fit on the pipes.

Holes in the roof for direct-vent two-pipe terminations should be spaced no more than 18 in. (457 mm) apart to help avoid vent gas recirculation into combustion air intake.

Termination elbows will be installed after the vent and (if used) combustion air pipe is installed.

⚠ NOTICE

RECOMMENDED SUPPORT FOR VENT TERMINATIONS

It is recommended that rooftop vent terminations in excess of 36 inches (1 M) in vertical length be supported by **EITHER** the Direct Vent Termination Kit shown in Table 13 or by field-supplied brackets or supports fastened to the structure.

Sidewall Terminations

Concentric Vent

NOTE: Follow the instructions of the vent terminal manufacturer. These instructions are provided as a reference only.

Determine an appropriate location for termination kit using the guidelines provided in Locating the Vent Termination on p36.

1. Cut one 4-in. diameter hole for 2-in. kit, or one 5-in. diameter hole for 3-in. kit.
2. Loosely assemble concentric vent/combustion air termination components together using instructions in kit.
3. Slide assembled kit with rain shield REMOVED through hole.

NOTE: Do not allow insulation or other materials to accumulate inside of pipe assembly when installing it through hole.

4. Locate assembly through sidewall with rain shield positioned no more than 1-in. (25 mm) from wall as shown in Fig. 40.
5. Disassemble loose pipe fittings. Clean and cement using same procedures as used for system piping. **DO NOT CEMENT POLYPROPYLENE FITTINGS.**

2-Pipe and 1-Pipe Vent Termination

NOTE: Follow the instructions of the vent terminal manufacturer. These instructions are provided as a reference, only.

⚠ NOTICE

RECOMMENDED SUPPORT FOR VENT TERMINATIONS

It is recommended that sidewall vent terminations in excess of 24 inches (0.6 M) in vertical length be supported by **EITHER** the Direct Vent Termination Kit shown in Table 13 or by field-supplied brackets or supports fastened to the structure.

Determine an appropriate location for termination kit using the guidelines provided in Locating the Vent Termination on p36.

1. Cut two holes, one for each pipe, of appropriate size for pipe size being used.

2. Loosely install elbow in bracket (if used) and place assembly on combustion-air pipe.
3. Install bracket as shown in Fig. 40 and Fig. 48.

NOTE: For applications using vent pipe option indicated by dashed lines in Fig. 40 and Fig. 41, rotate vent elbow 90° from position.

4. Disassemble loose pipe fittings. Clean and cement using same procedures as used for system piping. **DO NOT CEMENT POLYPROPYLENE FITTINGS.**

(Direct Vent / 2-Pipe System ONLY)

When two or more furnaces are vented near each other, two vent terminations may be installed as shown in Fig. 40, but next vent termination, or pair of vent terminations, must be at least 36 in. (914 mm) away from the first two terminations. It is important that vent terminations be made as shown in Fig. 40 to avoid recirculation of vent gases.

Inducer Outlet Restrictor

To improve efficiency and operation of 40K, 60K, 100K or 120K BTUH input models on very short vent systems, an inducer outlet restrictor is required to be installed on the outlet of the inducer assembly. The outlet restrictor is shown in the footnote of Table 15 -Maximum Equivalent Vent Length. The outlet restrictor for 40K models is shipped in the loose parts bag. See Table 15 for usage, part numbers and sourcing of 60K, 100K, and 120K inducer outlet restrictors.

To determine if the outlet restrictor is required, see Table 15. **Failure to use an outlet restrictor on the 40K input model when required may result in flame disturbance or flame sense lockout.**

To install the outlet restrictor:

1. Remove the vent elbow from the inducer outlet.
2. Align the lock tabs on the outlet restrictor with the slots on inside outlet of the inducer assembly.
3. Snap the outlet restrictor in place.
4. Re-install the vent elbow.
5. Torque vent elbow clamp 15-lb-in.

Venting System Length Calculations

The Total Equivalent Vent Length (TEVL) for **EACH** combustion air or vent pipe equals the length of the venting system, plus the equivalent length of elbows used in the venting system from Table 16.

Standard vent terminations or factory accessory concentric vent terminations count for zero deduction.

See vent system manufacturer's data for equivalent lengths of flexible vent pipe or other termination systems. **DO NOT ASSUME** that one foot of flexible vent pipe equals one foot of straight PVC/ABS DWV vent pipe.

Compare the Total Equivalent Vent Length to the Maximum Equivalent Vent Lengths in Table 15.

Example 1

A direct-vent 60,000 BTUH furnace installed at 2100 ft. (640M). Venting system includes **FOR EACH PIPE:**
70 feet (22 M) of vent pipe, 65 feet (20 M) of combustion air inlet pipe, (3) 90º long-radius elbows, (2) 45º long-radius elbows, and a factory accessory concentric vent kit.

Can this application use 2" (50 mm ND) PVC/ABS DWV vent piping?

Measure the required linear length of air inlet and vent pipe; insert the longest of the two here				=	70 ft. (22 M)	Use length of the longer of the vent or air inlet piping system
Add equiv length of (3) 90º long-radius elbows (use the highest number of elbows for either the vent or inlet pipe)	3	x	3 ft. (0.9 M)	=	9 ft. (2.7 M)	From Table 16
Add equiv length of (2) 45º long-radius elbows (use the highest number of elbows for either the vent or inlet pipe)	2	x	1.5 ft. (0.5 M)	=	3 ft. (0.9 M)	From Table 16
Add equiv length of factory concentric vent term					0 ft.	From Table 16
Add correction for flexible vent pipe, if any					0 ft.	From Vent Manufacturer's instructions; zero for PVC/ABS DWV
Total Equivalent Vent Length (TEVL)					82 ft. (25 M)	Add all of the above lines
Maximum Equivalent Vent Length (MEVL)					95 ft. (29 M)	For 2" pipe from Table 15
Is TEVL less than MEVL?					YES	Therefore, 2" pipe MAY be used

Example 2

A direct-vent 60,000 BTUH furnace installed at 2100 ft. (640M). Venting system includes **FOR EACH PIPE:**
100 feet (30 M) of vent pipe, 95 feet (29 M) of combustion air inlet pipe, (3) 90º long-radius elbows, and a polypropylene concentric vent kit. Also includes 20 feet (6.1 M) of flexible polypropylene vent pipe, included within the 100 feet (30 M) of vent pipe.

VERIFY FROM POLYPROPYLENE VENT MANUFACTURER'S INSTRUCTIONS for the multiplier correction for flexible vent pipe.

Can this application use 60mm o.d. (2") polypropylene vent piping? If not, what size piping can be used?

Measure the required linear length of **RIGID** air inlet and vent pipe; insert the longest of the two here: 100 ft. Of rigid pipe - 20 ft. Of flexible pipe				=	80 ft. (24 M)	Use length of the longer of the vent or air inlet piping system
Add equiv length of (3) 90º long-radius elbows (use the highest number of elbows for either the vent or inlet pipe)	3	x	5 ft. (1.5 M)	=	15 ft. (4.6 M)	Example from polypropylene vent manufacturer's instructions, Verify from vent manufacturer's instructions.
Add equiv length of 45º long-radius elbows (use the highest number of elbows for either the vent or inlet pipe)	0	x		=	0 ft. (0 M)	
Add equiv length of factory concentric vent term	9	x	3.3 ft (0.9 M)	=	30 ft. (9 M)	
Add correction for flexible vent pipe, if any	2*	x	20 ft. (6.1 M)	=	40 ft. (12.2 M)	
* VERIFY FROM VENT MANUFACTURER'S INSTRUCTIONS; For example only, assume 1 meter of flexible 60mm (2") or 80mm (3") polypropylene pipe equals 2.0 meters (6.5 ft.) of PVC/ABS pipe.						
Total Equivalent Vent Length (TEVL)					165 ft. (50 M)	Add all of the above lines
Maximum Equivalent Vent Length (MEVL)					95 ft. (29 M)	For 2" pipe from Table 15
Is TEVL less than MEVL?					NO	Therefore, 60mm (2") pipe may NOT be used; try 80mm (3")
Maximum Equivalent Vent Length (MEVL)					185 ft. (57 M)	For 3" pipe from Table 15
Is TEVL less than MEVL?					YES	Therefore, 80mm (3") pipe MAY be used

AIR DELIVERY - CFM

Table 19 – Air Delivery - CFM (with filter)

Unit Size	Airflow Setting	Default Setting	External Static Pressure (in. w.c.)									
			0.1	0.2	0.3	0.4	0.5	0.6	0.7	0.8	0.9	1
36040A	1	Cont. Fan	435	370	310	255	195	120	-	-	-	-
	2		480	420	365	310	260	200	135	-	-	-
	3		525	470	415	365	315	265	210	145	-	-
	4		550	500	445	395	350	305	255	200	135	-
	5		615	570	520	470	425	385	345	300	245	195
	6		665	620	575	525	480	440	400	365	320	275
	7		705	665	625	580	535	495	455	420	380	345
	8	Heat	730	690	650	600	560	520	480	445	405	370
	9		775	735	695	655	610	570	535	495	460	425
	10		800	765	725	690	645	605	565	535	495	465
	11		850	815	775	740	700	660	625	590	555	525
	12		900	870	835	800	765	725	690	655	620	590
	13		955	920	890	855	825	785	750	715	685	650
	14		995	965	930	900	865	835	800	765	730	700
	15		1040	1010	980	950	920	890	855	825	790	760
	16		1085	1055	1025	1000	970	940	910	875	845	810
	17		1135	1110	1080	1050	1025	990	965	935	905	870
	18	Cooling	1215	1190	1160	1130	1090	1055	1020	985	940	900

Table 19 – Air Delivery - CFM (with filter) (Continued)

Unit Size	Airflow Setting	Default Setting	External Static Pressure (in. w.c.)									
			0.1	0.2	0.3	0.4	0.5	0.6	0.7	0.8	0.9	1
36040B	1	Cont. Fan	400	335	270	210	140	-	-	-	-	-
	2		485	425	365	310	265	200	140	-	-	-
	3		530	475	415	360	320	270	210	150	-	-
	4		585	530	480	425	375	340	295	235	185	145
	5		620	570	520	470	420	380	345	295	245	195
	6		660	610	565	515	470	420	385	350	300	255
	7		705	660	615	570	525	480	435	405	370	325
	8		730	685	640	595	550	505	460	430	400	360
	9	Heat	760	720	675	630	590	550	500	465	435	405
	10		800	760	720	680	635	595	555	510	480	450
	11		850	810	770	730	695	655	615	575	535	505
	12		900	865	830	795	755	720	680	645	605	570
	13		960	930	895	860	825	790	755	720	685	650
	14		1010	980	945	910	875	840	810	780	745	710
	15		1060	1025	995	965	930	895	865	835	800	765
	16		1110	1080	1050	1020	985	955	925	895	865	835
	17		1165	1135	1105	1080	1045	1020	990	960	930	900
	18	Cooling	1225	1195	1165	1135	1100	1060	1020	985	945	910
36060A	1	Cont. Fan	585	515	445	380	320	260	195	145	-	-
	2		630	570	510	440	380	330	270	205	160	-
	3		695	635	580	520	460	405	355	300	240	180
	4		735	685	630	575	510	460	410	360	310	250
	5		780	725	675	620	565	510	455	410	365	315
	6		800	755	700	650	600	540	490	440	400	355
	7		875	830	785	735	690	640	585	540	495	450
	8		935	890	845	805	760	715	665	615	570	525
	9		990	950	910	865	820	780	735	690	640	600
	10		1025	980	940	900	860	820	775	730	685	640
	11		1045	1005	965	925	880	840	800	760	710	670
	12	Heat	1100	1065	1025	990	950	910	870	835	790	745
	13		1160	1120	1085	1050	1010	975	935	900	860	820
	14		1195	1160	1120	1085	1050	1015	975	940	905	870
	15		1215	1180	1150	1115	1080	1045	1005	970	935	900
	16		1285	1250	1220	1185	1150	1120	1085	1050	1015	980
	17		1345	1315	1285	1255	1220	1190	1155	1125	1090	1060
	18	Cooling	1405	1375	1345	1315	1285	1255	1220	1190	1160	1125
42060B	1	Cont. Fan	530	440	350	270	200	125	-	-	-	-
	2		610	530	450	365	295	235	170	-	-	-
	3		645	570	495	410	335	280	220	155	-	-
	4		680	610	530	455	380	320	265	205	140	-
	5		730	665	590	520	440	375	325	270	215	150
	6		790	725	660	595	520	455	390	345	290	240
	7		845	785	725	665	600	530	465	410	365	320
	8		900	840	785	725	665	600	535	480	425	385
	9	Heat	965	910	860	805	750	690	620	565	505	460
	10		1010	960	910	860	805	750	695	625	570	520
	11		1065	1015	970	920	870	820	765	710	650	595
	12		1135	1085	1040	995	950	900	850	795	740	685
	13		1195	1150	1105	1060	1015	970	925	880	825	770
	14		1250	1205	1160	1120	1080	1035	995	950	905	850
	15		1320	1275	1235	1195	1155	1110	1070	1030	985	940
	16		1380	1335	1295	1260	1220	1180	1140	1100	1060	1020
	17		1440	1400	1360	1325	1290	1250	1215	1175	1135	1100
	18	Cooling	1485	1450	1410	1375	1340	1300	1265	1230	1190	1155

Table 19 – Air Delivery - CFM (with filter) (Continued)

Unit Size	Airflow Setting	Default Setting	External Static Pressure (in. w.c.)									
			0.1	0.2	0.3	0.4	0.5	0.6	0.7	0.8	0.9	1
48080B	1	Cont. Fan	595	510	425	345	270	195	125	-	-	-
	2		655	580	500	425	345	280	215	145	-	-
	3		740	670	600	525	460	390	325	265	205	145
	4		810	750	685	620	555	495	425	365	310	255
	5		880	820	765	705	640	580	525	460	400	350
	6		945	890	835	780	720	660	605	555	490	435
	7		1005	950	900	845	795	735	680	630	580	520
	8		1080	1030	980	930	880	830	780	725	680	630
	9		1150	1105	1055	1010	965	915	870	820	770	725
	10		1235	1190	1145	1100	1060	1015	970	925	880	835
	11	Heat	1345	1300	1260	1220	1180	1140	1100	1060	1020	975
	12		1390	1345	1305	1265	1230	1190	1150	1115	1075	1030
	13		1475	1435	1395	1360	1320	1285	1250	1215	1175	1140
	14		1560	1520	1485	1445	1410	1380	1345	1310	1275	1240
	15		1630	1595	1560	1525	1495	1460	1425	1400	1365	1335
	16		1720	1685	1655	1620	1585	1555	1525	1500	1470	1440
	17	Cooling	1805	1770	1740	1710	1680	1650	1620	1595	1570	1545
	18		1910	1885	1850	1820	1790	1750	1710	1670	1630	1590
60080C	1	Cont. Fan	660	555	460	370	275	190	-	-	-	-
	2		720	630	535	450	360	275	195	120	-	-
	3		780	690	605	520	440	355	275	200	125	-
	4		860	780	695	615	535	460	385	315	240	170
	5		940	860	780	705	630	560	490	415	350	280
	6		1025	955	880	810	740	670	600	540	470	405
	7		1110	1040	975	905	840	770	710	645	590	525
	8		1190	1125	1060	995	935	870	810	745	685	635
	9		1285	1220	1160	1100	1045	985	920	865	805	750
	10		1355	1295	1235	1180	1120	1065	1010	955	895	840
	11		1420	1365	1310	1255	1200	1145	1090	1040	985	930
	12	Heat	1530	1480	1425	1375	1325	1275	1220	1170	1120	1070
	13		1610	1555	1505	1460	1410	1360	1310	1265	1215	1165
	14		1695	1645	1595	1550	1505	1460	1410	1365	1320	1275
	15		1780	1730	1685	1640	1595	1550	1510	1465	1425	1380
	16		1860	1815	1770	1730	1685	1645	1600	1560	1520	1480
	17		1945	1905	1865	1820	1780	1745	1710	1670	1635	1595
	18	Cooling	2050	2010	1970	1930	1890	1845	1795	1745	1690	1635
60100C	1	Cont. Fan	740	640	545	455	375	295	215	140	-	-
	2		830	740	650	565	480	410	335	260	190	-
	3		905	825	740	655	575	505	440	375	300	235
	4		975	900	820	740	665	585	525	465	400	335
	5		1045	975	900	820	750	675	605	550	490	430
	6		1130	1065	995	925	850	780	715	650	595	540
	7		1210	1145	1080	1015	945	880	815	750	690	640
	8		1285	1225	1165	1105	1040	975	910	850	790	730
	9		1355	1300	1240	1185	1125	1060	1000	940	880	820
	10		1435	1380	1330	1275	1225	1165	1105	1045	990	935
	11		1535	1480	1430	1380	1330	1280	1225	1170	1115	1060
	12		1610	1560	1510	1460	1415	1365	1315	1260	1210	1160
	13	Heat	1665	1620	1570	1525	1480	1430	1385	1335	1280	1235
	14		1695	1650	1600	1555	1510	1465	1420	1370	1320	1270
	15		1780	1735	1690	1650	1605	1560	1515	1470	1425	1380
	16		1870	1830	1790	1745	1705	1665	1625	1585	1540	1500
	17		1965	1925	1880	1845	1805	1770	1730	1695	1655	1615
	18	Cooling	2060	2020	1980	1945	1905	1870	1820	1765	1710	1655

Table 19 – Air Delivery - CFM (with filter) (Continued)

Unit Size	Airflow Setting	Default Setting	External Static Pressure (in. w.c.)									
			0.1	0.2	0.3	0.4	0.5	0.6	0.7	0.8	0.9	1
60120D	1	Cont. Fan	770	665	545	445	355	275	185	-	-	-
	2		830	725	615	515	425	345	265	180	130	-
	3		915	815	725	615	525	445	370	295	220	165
	4		990	895	810	710	620	540	465	395	325	255
	5		1085	1000	915	835	740	655	580	510	445	380
	6		1170	1095	1010	935	855	765	690	620	555	490
	7		1235	1160	1080	1005	935	850	770	700	635	570
	8		1330	1260	1190	1115	1050	980	900	820	755	695
	9		1405	1335	1270	1200	1135	1070	1000	920	850	790
	10		1490	1425	1365	1295	1235	1170	1110	1040	965	900
	11		1585	1525	1470	1405	1340	1285	1230	1170	1105	1030
	12		1665	1605	1550	1495	1435	1375	1320	1270	1210	1145
	13		1750	1700	1645	1595	1535	1480	1425	1375	1320	1270
	14		1835	1785	1740	1685	1630	1575	1525	1475	1430	1385
	15	Heat	1880	1830	1780	1730	1680	1625	1575	1530	1480	1435
	16		1920	1875	1825	1775	1730	1675	1625	1580	1535	1490
	17		1995	1945	1900	1855	1810	1760	1715	1670	1625	1585
	18	Cooling	2115	2065	2020	1975	1930	1875	1815	1750	1690	1630

NOTE:

1.A filter is required for each return-air inlet. Airflow performance included 3/4-in. (19 mm) washable filter media such as contained in a factory - authorized accessory filter rack. See accessory list. To determine airflow performance without this filter, assume an additional 0.1 in. w.c. available external static pressure.

2.Adjust the blower airflow settings as necessary for the proper air temperature rise for each installation.

3.Airflows over 1800 CFM require bottom return, two-side return, or bottom and side return. A minimum filter size of 20” x 25” (508 x 635 mm) is required.

4.For upflow applications, air entering from one side into both the side of the furnace and a return air base counts as a side and bottom return

5..The -- entry indicates unstable operating conditions

Table 20 – Airflow Settings

	Default Airflow Settings*		Designated Airflow Settings	
Unit Size	Heating	Cooling	Heating	Const. Fan
36040A	8	18	(5-8)	(1-4)
36040B	9	18	(4-9)	(1-1)
36060A	12	18	(6-14)	(1-6)
42060B	9	18	(7-14)	(1-8)
48080B	11	17	(8-14)	(1-8)
60080C	12	18	(7-14)	(1-8)
60100C	13	18	(7-16)	(1-7)
60120D	15	18	(12-16)	(1-1)

*. Setting #1 is the default setting for Constant Fan

FURNACE CONTROL PROGRAMMING AND NAVIGATION

On-Board Control Method

⚠ CAUTION

ELECTRICAL SHOCK HAZARD

Failure to follow this warning could result in personal injury, or death.

Blower access door switch removes 115V power to control. No component operation can occur unless switch is closed. Caution must be taken when manually closing this switch for service purposes.

Do not tape or permanently allow the door switch to be bypassed. Temporarily depress the door switch with one hand while accessing the service buttons with your other hand. Do not touch uninsulated electrical components.

This furnace model is equipped with an on-board 3-digit LCD display with pushbutton navigation for the adjustment of operating parameters, diagnostics, and service. The control board must be powered to use the display and pushbuttons. Upon startup, the control will alternate displaying the Model Program Number (PrG) and Software Version (uEr). The control board has been programmed at the factory with a Model Program Number specific to the furnace product number. The correct Model Program Number is shown on the furnace rating plate.

The system’s status is displayed after startup or after no control buttons have been pressed for 60 seconds. Status Code LED will also be illuminated or blinking when displaying the system status. The codes which indicate the current operating mode of the system as shown in Table 21.

Table 21 – System Status Display Codes

Display	Operating Mode	Notes:
idL	Idle/Standby Mode	No active demands
Ht	Heating Mode	Gas Heating active
CL	Cooling Mode	Cooling or Heat Pump active
HPd	Heat Pump Defrost Mode	Gas Heating cycle active during Heat Pump Defrost cycle
CFn	Continuous Fan Mode	Continuous Fan active
bLr	Secondary Unit Operating Blower	Only used when control is the secondary furnace of a twinned furnace system and primary furnace is active
22.2	Active Status Code	See Fig. 60 or Furnace Service Label for codes

Table 22 – Main Menu Options

Display	Operating Mode	Use
FLt	Last 7 faults that occurred	Faults code menu stores the 7 latest faults in memory. If no faults, None (non) will be displayed. To clear fault history, scroll to Clear (CLr) and press MENU/SELECT. See Fig. 60 or Furnace Service Label for codes.
Ht	Heating blower speed	Heating Airflow Setting. Adjust higher to lower Temp. Rise; lower to increase Temp. Rise. See Start-Up Procedures. See Fig. 59 for allowable selections and Table 19 for airflows.
CL	Cooling and Heat Pump blower speed	Cooling Airflow Setting. See Fig. 59 for allowable selections and Table 19 for airflows. Refer to cooling or heat pump equipment data for required airflow settings.
CFn	Constant Fan blower speed	Constant Fan Airflow Setting. See Fig. 59 for allowable selections and Table 19 for airflows.
Hod	Heat Blower-OFF Delay	Value shown in seconds. Shorter delays may leave unused heat in ducts. Longer delays may blow cold air at the end of heating demands.
Cod	Cool Blower-OFF Delay	Value shown in seconds. Shorter delays may leave unused energy in furnace coil. Longer delays may re-evaporate condensate.
dir	Direction	Adjusts display orientation 180 degrees between up flow (UPF) and down flow (dnF).
tnn	Twinning	Primary (Pr i) or secondary (SEcond) furnace selection. Adjust only if furnace is used in a twinned furnace system. Use of accessory kit required. See kit instructions.
inF	Program # and Software	Do NOT program the control board with a Model Program Number different than what is specified on the rating plate. Alternates displaying the saved Model Program Number (PrG) and Software Version (uEr).
Ct	Component Test	Use to validate components are functioning as intended. See Component Self-Test instructions in the Start-Up Procedures section.
rSt	Reset	Reset settings to Factory Default by selecting Yes (YES).

The Main Menu provides access to operating parameters of the furnace control including airflows as well as other diagnostics. See Fig. 38 for the location of the pushbuttons. Scroll through Main Menu by pressing MENU/SELECT button. Press NEXT/OPTION to display the current setting of the parameter (value will flash). Additional presses will scroll through setting options. Press MENU/SELECT button to save a new setting and return to the Main Menu. The display will flash three times to confirm a new setting selection has been saved. Fig. 59 shows the flow of the menu and settings. Table 22 provides additional information on parameter adjustment and applicability.

NFC and Supported App Method

This furnace control board is also equipped with NFC (Near Field Communication) technology which allows the adjustment of operating parameters, diagnostics, and service via a field-supplied mobile device with NFC capability and supported mobile app. Remove 115V power from the furnace control board to use this method. See Fig. 38 for the location of the NFC antenna. Additional instructions and help may be available through the supported mobile app.

Scan the mobile app QR Code on page 1 of this manual for more information and a link to download the mobile app.

Control Board Replacement

If the control board must be replaced, the new board must be programmed with the correct Model Program Number before the furnace will operate. Do NOT program the control board with a Model Program Number different than what is specified on the rating plate. The control may be programmed by either of these approved methods:

1. Use the supported mobile app to flash the model program onto the board using Near Field Communication (NFC). Scan the QR code on page 1 of this manual for more information and a link to download the mobile app.
2. Use the correct Super Plug (available from distributor / replacement component) for the control board to copy the correct model program onto the new board.

Further details and instructions for these programming methods are provided with the replacement control board.

⚠ CAUTION

FURNACE OVERHEATING HAZARD

Failure to follow this caution could result in reduced furnace life.

Do NOT program the control board with a Model Program Number different than what is specified on the rating plate. Parameter options will not match design values.

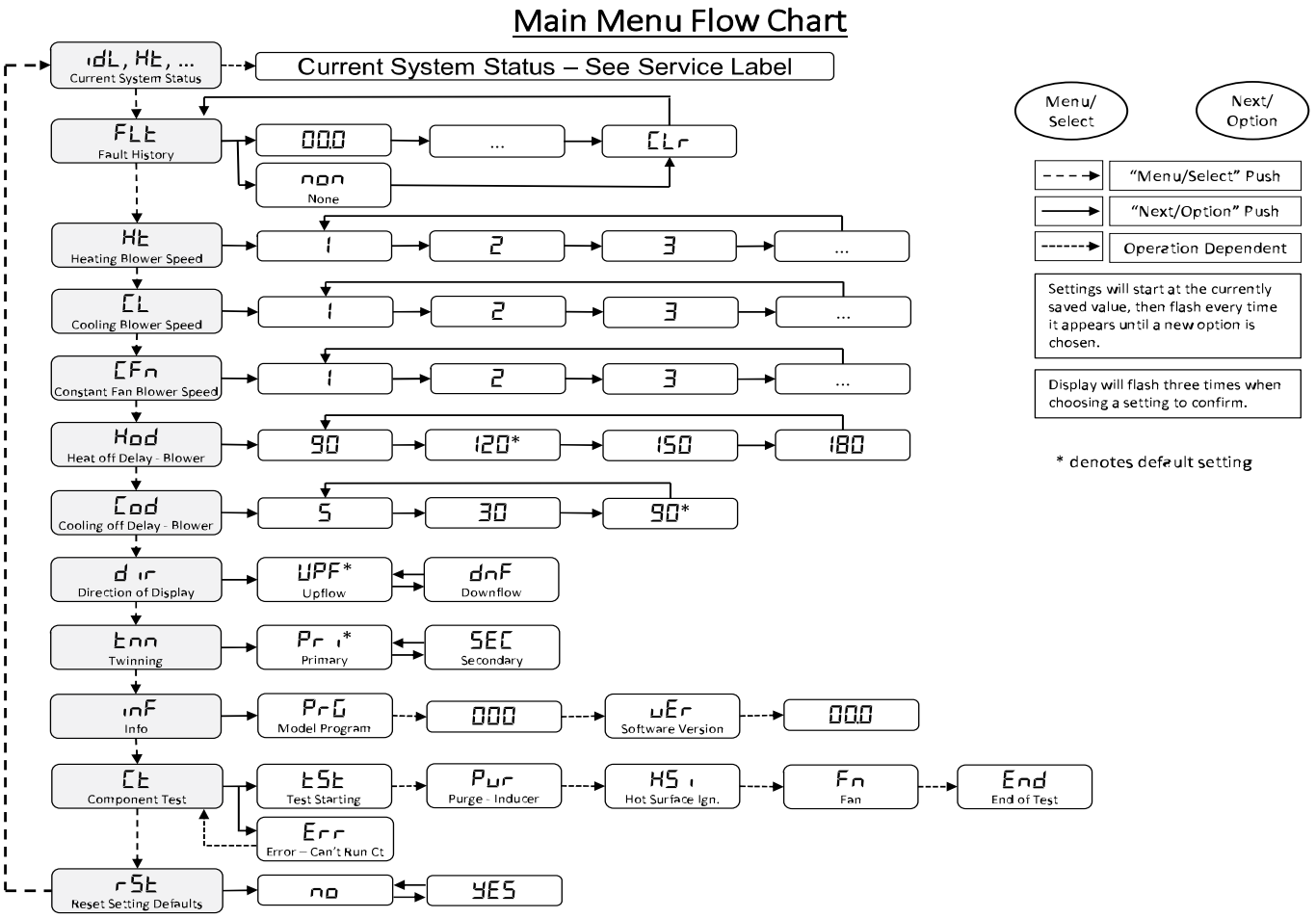

Fig. 59 – 3 Digit Display Flow Chart

SERVICE LABEL

STATUS CODE TABLE

Scan QR code or reference troubleshooting guide in installation manual.

The major status code is displayed in the first 2 digits of the display. The minor status code is displayed in the third digit . The major status code is also displayed on the LED indicator through the door with the first digit being the number of short flashes and the second digit being the number of long flashes.

Major	Minor	Description
10	1	L1 polarity fault
Rapid flash LED		
12	1	W on at power up
13	1	Limit Lockout - switch open longer than 3 minutes in Main Limit circuit
14	1	Ignition Lockout after 4 consecutive ignition tries
	2	Flame lost 3 times after 70s of heating
	3	Lockout - 7 loss of flame events during a heat request
21	1	24VAC sensed on gas valve when shouldn't be
22	1	False flame
23	1	Stuck closed Main pressure switch
	2	Stuck closed secondary pressure switch
24	1	Fuse fault
25	1	No program info in micro, no heating operation.
	2	Corrupted program file, reprogram control using service app or super plug (supplied separately), no heating operation.
	3	Twinned units are not identical, program #'s do not match. Ensure furnaces are identical (same program #) when twinning. Main unit will not operate heating.
25	4	Main program invalid, using backup program to operate. Reprogram control to correct issue. Control still operates normally.
	5	Installer settings corrupted.Try reselecting installer settings, or reprogram control. Control will operate using default installer settings.
	6	Wrong program for control used - reprogram control so program matches control used. No heating operation.
	7	Non-Condensing program detected in a Condensing model.
		If program in furnace control is missing, not recognized, or corrupted. Reprogram Reprogram control with correct program # as listed on the rating plate.Replace control if issue remains.
27	1	Program in super plug is missing, not recognized, or corrupted. Remove super plug then retry. If still have 27 code, try a different super plug. If still fails, replace control.
	2	
	3	
31	2	Open secondary pressure switch (HPS)
	3	Secondary PS Lockout - failed to close secondary PS after three trials
32	1	Open Main pressure switch (LPS)
33	1	A switch has opened in the Main Limit circuit.
34	1	Ignition fault - during four consecutive ignition trials.
	2	After successful ignition (flame proven) flame loss before heating blower on delay.
	3	After successful ignition (flame proven) flame loss after heating blower on delay.
45	1	Control failure – flame circuit fault, memory mismatch or sequence error.
	2	Control failure – gas valve relay will not close.
	3	Control failure – EEPROM memory issue.
		For code 45, cycle power, if code 45 repeats, replace control.
46	1	Momentary loss of power

MENU NAVIGATION

Scroll through main menu by pressing the MENU/SELECT button. Press NEXT/OPTION button to view current setting (will flash on display) and to scroll through setting options. Press MENU/SELECT button to save new setting and return to main menu. The display will flash to confirm setting selection before returning to the main menu.

SYSTEM STATUS		MAIN MENU	
DISPLAY	DESCRIPTION	DISPLAY	DESCRIPTION
idL	Idle / Stand by Mode	idL,Ht,...	Current System Status
		FLt	Last 7 faults that occured
Ht	Heating Mode	Ht	Heating Blower speed
CL	Cooling Mode	CL	Cooling and Heat Pump Blower speed
HPd	Heat Pump Defrost Mode	CFn	Continuous Fan speed
		Hod	Heat OFF delay
CFn	Continuous Fan Mode	Cod	Cool OFF delay
		dir	Orientation upflow or downflow
bLr	Secondary Unit Operating Blower during CFn, CL, or Ht	tnn	Twinning Main or Secondary
		inF	Program # and Software version
##.#	Active Status Code	Ct	Component test
		rSt	Reset All Installer Settings to Factory Defaults

COMPONENT TEST

To initiate the component test sequence, the control must be in (idL) mode. No thermostat demands (W, Y, G). Select component test (Ct) from menu select buttons to start the component test sequence. Once initiated the furnace control will perform the following sequence:

1. Pur- Inducer ON (remains ON for test).
2. HS I- After waiting 10s, HSI ON for 15 seconds.
3. Fn- After HSI, then Blower ON for 10 seconds.
4. End- After Blower, Inducer ON for 10 more seconds.
   The test ends.

All copyrighted materials used herein are the property of their respective owners.

A210798

Fig. 60 – Service Label Information

START-UP, ADJUSTMENT, AND SAFETY CHECK

General

⚠ CAUTION

UNIT OPERATION HAZARD

Failure to follow this caution may result in intermittent unit operation or performance dissatisfaction.

These furnaces are equipped with a manual reset limit switch in burner assembly. This switch opens and shuts off power to the gas valve is an overheat condition (flame rollout) occurs in the burner assembly/enclosure. Correct inadequate combustion-air supply, improper gas pressure setting, improper burner or gas orifice positioning or improper venting condition before resetting switch. DO NOT jumper this switch.

⚠ NOTICE

IMPORTANT INSTALLATION AND START-UP PROCEDURES

Failure to follow this procedure may result in a nuisance smoke or odor complaint.

The manifold pressure, gas rate by meter clocking, temperature rise and operation must be checked after installation. Minor smoke and odor may be present temporarily after start-up from the manufacturing process. Some occupants are more sensitive to this minor smoke and odor. It is recommended that doors and windows be open during the first heat cycle.

1. Maintain 115V wiring and ground. Improper polarity will result in rapid flashing control diagnostic light and Status code (10 . 1) is displayed. The furnace will NOT operate.
2. Make thermostat wire connections at the 24V terminal block on the furnace control. Failure to make proper connections will result in improper operation.
3. Gas supply pressure to the furnace must be greater than 4.5-in. w.c. (0.16 psig) but not exceed 14-in. w.c. (0.5 psig).

4. Check all manual-reset switches for continuity.
5. Natural gas service pressure must not exceed 0.5 psig (14- in. w.c., 350 Pa), but must be no less than 0.16 psig (4.5-in. w.c., 1125 Pa).
6. Blower door must be in place to complete 115V electrical circuit and supply power to the furnace components.

⚠ CAUTION

CUT HAZARD

Failure to follow this caution may result in personal injury.

Sheet metal parts may have sharp edges or burrs. Use care and wear appropriate protective clothing, safety glasses and gloves when handling parts and servicing furnaces.

Start-Up Procedures

1. Purge gas lines after all connections have been made.
2. Check gas lines for leaks.

⚠ WARNING

ELECTRICAL SHOCK HAZARD

Failure to follow this warning could result in personal injury, or death.

Blower access door switch opens 115V power to control. No component operation can occur unless switch is closed. Caution must be taken. Do not touch uninsulated electrical components when manually closing this switch. for service purposes.

3. To Begin Component Self-Test
   a. Remove thermostat wire connected to R terminal on control to ensure no thermostat demands are present.
   b. Temporarily depress blower door switch to power the control board to complete component self-test.

⚠ CAUTION

SHOCK HAZARD

Failure to follow this caution could result in personal injury.

Do not tape or permanently allow the door switch to be bypassed. Temporarily depress the door switch with one hand while accessing the service buttons with your other hand. Do not touch uninsulated electrical components.

   c. To initiate the component test sequence, the control must be in (idL) mode. no thermostat demands (W, Y, G). Select component test (Ct) from menu select buttons to start the component test sequence as shown in Table 23. Once initiated the furnace control will perform the Reconnect thermostat wire connected to R terminal on control board and re-install blower door.
4. Operate furnace per instruction on door.
5. Verify furnace shut down by lowering thermostat setting below room temperature.
6. Verify furnace restarts by raising thermostat setting above room temperature.

Table 23 – Test Sequence

Display	Operating Mode	Function
tSt	Test	Confirms start of Component Test mode.
Pur	Purge	Inducer ON for 10 seconds before next stage. Inducer remains ON for test duration.
HS1	Hot Surface Igniter	Hot Surface Igniter ON for 15 seconds, then OFF.
Fn	Fan	Blower ON at 50% torque for 10 seconds, then OFF.
End	End Test	All component OFF except for Inducer for 10 seconds. Display returns to idL. If a thermostat input is detected or fault condition activates during the test sequence, control will abort and display End for 6 seconds.
Err	Error	Displayed if component test is not able start. Check for thermostat inputs or faults, and system status is Idle (idL).

WIRING DIAGRAM

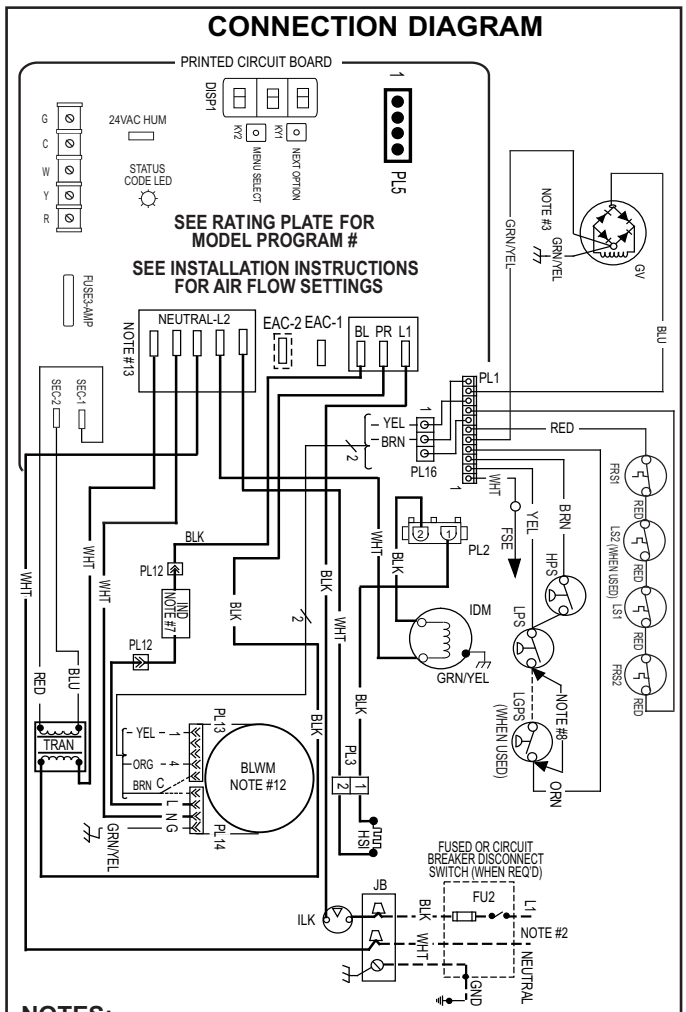

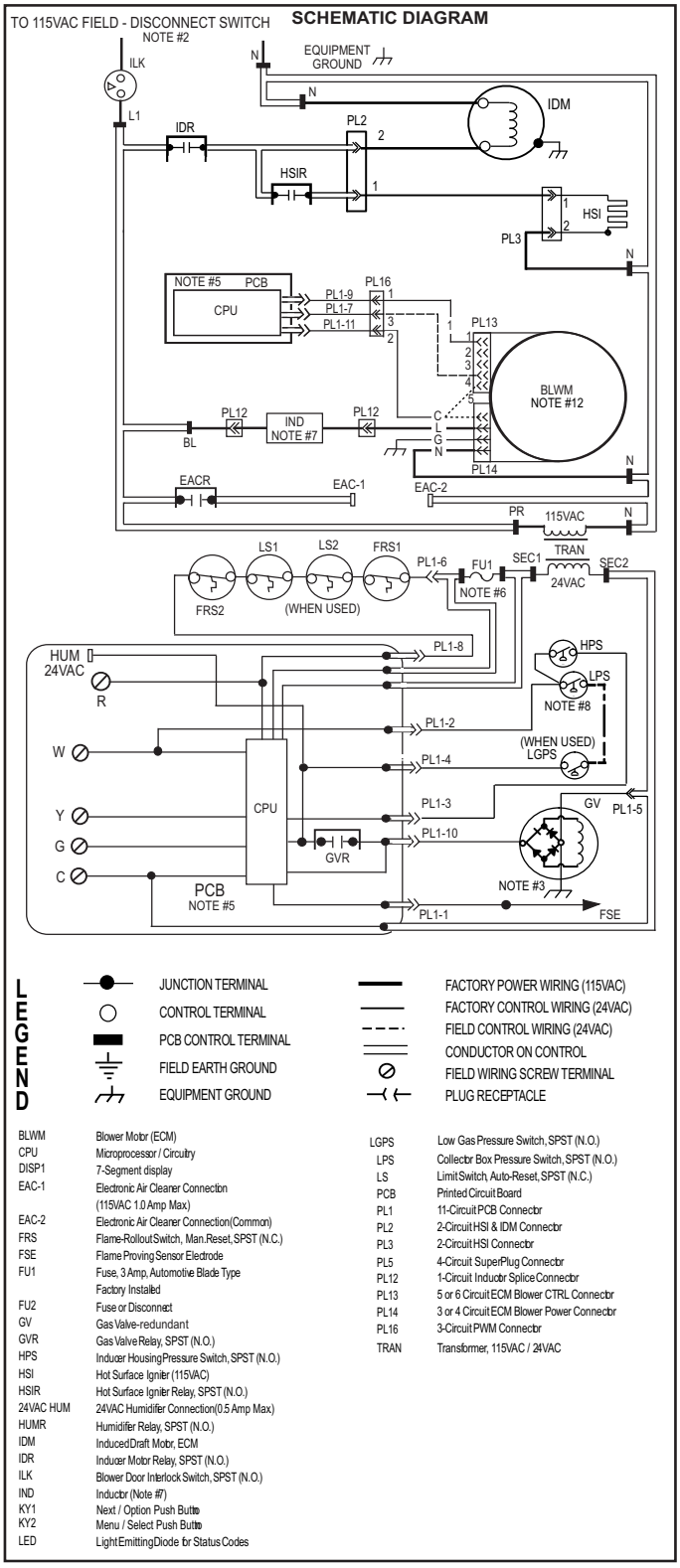

NOTES:

1. If any of the original equipment wire is replaced use wire rated for 105°C.
2. Use only copper wire between the disconnect switch and the furnace junction box (JB).
3. This wire must be connected to furnace sheet metal for control to prove flame.
4. Symbols are electrical representation only.
5. Solid lines inside PCB are printed circuit board conductors and are not included in legend.
6. Replace only with a 3 amp fuse.
7. Inductor may be used with 3/4 hp and 1 hp ECM Blower motors. Review motor instructions if replacing motor to see if Inductor is required.
8. Factory connected when LGPS is not used.
9. Blower-off delay: gas heating selections are 90, 120, 150 or 180 seconds, cooling or heat pump 90, 30 seconds or 5 seconds.
10. Ignition-lockout will occur after four consecutive unsuccessful trials-for-ignition. Control will auto-reset after three hours.
11. Inducer (IDM) motor contains internal auto-reset thermal overload switches (OL).
12. PL 13 and PL14 not available on all motors. Blower motor (BLWM) leads may be hardwired at motor. Depending on motor type, 24V Common wire may be in either CTRL (PL5) or Power (PL6) Connector
13. N connections are interchangeable within the N connector block.
14. BLWM is locked - rotor overload protected by redundant electronic control circuits.

A210800

Fig. 61 – Wiring Diagram

Prime Condensate Trap with Water

WARNING

CARBON MONOXIDE POISONING HAZARD

Failure to follow these warnings could result in personal injury or death.

Failure to use a properly configured trap or NOT water-priming trap before operating furnace may allow positive pressure vent gases to enter the structure through drain tube. Vent gases contain carbon monoxide which is tasteless and odorless.

CAUTION

UNIT OPERATION HAZARD

Failure to follow this caution may result in intermittent unit operation or performance satisfaction.

Condensate trap must be PRIMED or proper draining may not occur. The condensate trap has two internal chambers which can ONLY be primed by pouring water into the inducer drain side of condensate trap.

1. Remove upper and middle collector box drain plugs opposite of the condensate trap. See Fig. 62.

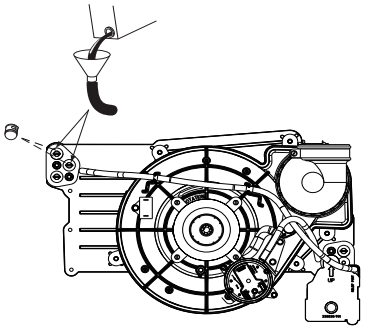

A11392

Fig. 62 – Priming Condensate Trap

2. Connect field-supplied 5/8-in. (16 mm) ID tube with attached funnel to upper collector box drain connection.
3. Pour one quart (liter) of water into funnel/tube. Water should run through collector box, overfill condensate trap, and flow into open field drain.
4. Remove funnel; replace collector box drain plug.
5. Connect field-supplied 5/8-in. (16 mm) ID tube to middle collector box drain port.
6. Pour one quart (liter) of water into funnel/tube. Water should run through collector box, overfill condensate trap, and flow into open field drain.
7. Remove funnel and tube from collector box and replace collector box drain plug.

Purge Gas Lines

If not previously done, purge the lines after all connections have been made and check for leaks.

WARNING

FIRE OR EXPLOSION HAZARD

Failure to follow this warning could result in personal injury, death, and/or property damage.

Never purge a gas line into a combustion chamber. Never test for gas leaks with an open flame. Use a commercially available soap solution made specifically for the detection of leaks to check all connections. A fire or explosion may result causing property damage, personal injury or loss of life.

ADJUSTMENTS

WARNING

FIRE HAZARD

Failure to follow this warning could result in personal injury, death and/or property damage.

DO NOT bottom out gas valve regulator adjusting screw. This can result in unregulated manifold pressure and result in excess overfire and heat exchanger failures.

CAUTION

FURNACE DAMAGE HAZARD

Failure to follow this caution may result in reduced furnace life.

DO NOT redrill orifices. Improper drilling (burrs, out-of-round holes, etc.) can cause excessive burner noise and misdirection of burner flames. This can result in flame impingement of heat exchangers, causing failures. See Fig. 63.

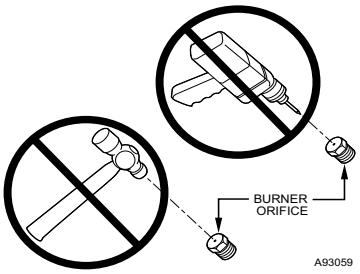

A93059

Fig. 63 – Orifice Hole

NOTICE

If orifice hole appears damaged or it is suspected to have been redrilled, check orifice hole with a numbered drill bit of correct size. Never redrill an orifice. A burr-free and squarely aligned orifice hole is essential for proper flame characteristics.

For proper operation and long term reliability, the Furnace input rate must be within ±2 percent of input rate on furnace rating plate, or as adjusted for altitude.

The gas input rate on rating plate is for installations at altitudes up to 2000 ft. (609.6M).

NOTICE

The NATURAL GAS manifold pressure adjustments in Table 26 compensate for BOTH altitude AND gas heating value. DO NOT apply an additional de-rate factor to the pressures show in Table 26. The values in this table are NOT referenced to sea level; they are AS-MEASURED AT ALTITUDE.

The heating content of natural gas at altitude may already provide for a reduction in capacity of the furnace. Be sure to obtain the expected in-season gas heating value of the gas from the gas supplier BEFORE making any adjustments for capacity or altitude. Refer to Table 26. No adjustments to the furnace may be necessary at altitude for certain gas heating values.

Refer to the instructions provided in the factory-specified LP/Propane conversion kit for instructions for setting gas manifold pressures for LP/Propane applications.

In the USA., the input rating for altitudes above 2000 ft. (609.6M) must be reduced by 2 percent for each 1000 ft. (304.8M) above sea level. Refer to Table 26. The natural gas manifold pressures in Table 26 adjust for BOTH altitude and natural gas heating value.

In Canada, the input rating must be reduced by 5 percent for altitudes of 2000 ft. (609.6M) to 4500 ft. (1371.6M) above sea level. The natural gas manifold pressures in Table 26 adjust for BOTH altitude and natural gas heating value.

Table 24 – Altitude Derate Multiplier for U.S.A.

ALTITUDE		PERCENT OF DERATE	DERATE MULTIPLIER FACTOR*
FT.	M		
0–2000	0-610	0	1.00
2001–3000	610-914	4-6	0.95
3001–4000	914-1219	6-8	0.93
4001–5000	1219-1524	8-10	0.91
5001–6000	1524-1829	10-12	0.89
6001–7000	1829-2134	12-14	0.87
7001–8000	2134-2438	14-16	0.85
8001–9000	2438-2743	16-18	0.83
9001–10,000	2743-3048	18-20	0.81

*Derate multiplier factors are based on midpoint altitude for altitude range.

NOTE: For Canadian altitudes of 2000 to 4500 ft. (610 to 1372 M), use USA altitudes of 2001 to 3000 ft. (611 to 914 M) in Table 24.

To adjust manifold pressure to obtain the proper input rate, first, determine if the furnace has the correct orifice installed. At higher altitudes or different gas heat contents, it may be necessary to change the factory orifice to a different orifice. Tables have been provided in the furnace installation instructions to match the required orifice to the manifold pressure to the heat content and specific gravity of the gas. To do this:

1. Obtain average yearly gas heat value (at installed altitude) from local gas supplier.
2. Obtain average yearly gas specific gravity from local gas supplier.
3. Find installation altitude in Table 24.
4. Find closest natural gas heat value and specific gravity in Table 26. Follow heat value and specific gravity lines to point of intersection to find orifice size and manifold pressure settings for proper operation.
5. Check and verify burner orifice size in furnace. NEVER ASSUME ORIFICE SIZE. ALWAYS CHECK AND VERIFY.
6. Replace orifice with correct size, if required by Table 26. Use only factory-supplied orifices. See EXAMPLE 1.

EXAMPLE 1: 0 - 2000 ft. (0 - 609.6M) altitude

Heating value = 1050 Btu/cu ft.

Specific gravity = 0.62

Therefore: Orifice No. 44

Manifold pressure: 3.4-in. w.c. (847 Pa)

(Furnace is shipped with No. 44 orifices. In this example, all main burner orifices are the correct size and do not need to be changed to obtain proper input rate.)

NOTE: To convert gas manifold Table pressures to Pascals, multiply the in. w.c. value by 249.1 Pa/in. w.c. (1 in. w.c. = 249.1 Pa).

Check Inlet Gas Pressure

The inlet gas pressure must be checked with the furnace operating in maximum heat. This is necessary to make sure the inlet gas pressure does not fall below the minimum pressure of 4.5 in. w.c.

1. Make sure the gas supply is turned off to the furnace and at the electric switch on the gas valve.
2. Loosen set screw on inlet tower pressure tap no more than one full turn with a 3/32-in. hex wrench or remove the 1/8-in. NPT plug from the inlet pressure tap on the gas valve.
3. Connect a manometer to the inlet pressure tap on gas valve.
4. Turn on furnace power supply.
5. Turn gas supply manual shutoff valve to ON position.
6. Turn furnace gas valve switch to ON position.
7. Jumper R and W thermostat connections at the furnace control board.
8. When main burners ignite, confirm inlet gas pressure is between 4.5 in. w.c. (1125 Pa) and 13.6 in. w.c. (3388 Pa).
9. Remove jumper across thermostat connections to terminate call for heat. Wait until the blower-OFF delay is completed.
10. Turn furnace gas valve electric switch to OFF position.
11. Turn gas supply manual shutoff valve to OFF position.
12. Turn off furnace power supply.
13. Remove manometer from the inlet pressure tap of the gas valve.

WARNING

FIRE HAZARD

Failure to follow this warning could result in personal injury, death, and/or property damage.

Inlet pressure tap set screw must be tightened and 1/8-in. NPT pipe plug must be installed to prevent gas leaks.

14. Tighten set screw on inlet tower pressure tap with 3/32-in. hex wrench, or if 1/8-in. NPT plug was removed, apply pipe dope sparingly to end of plug and re-install in the gas valve.

Adjust Manifold Pressure

1. Adjust manifold pressure to obtain proper gas input rate. See Fig. 64.
   a. Refer to the correct manifold pressure table for the appropriate model.
   b. Turn gas valve ON/OFF switch to OFF.
   c. Loosen set screw on manifold tower pressure tap no more than one full turn with a 3/32-in. hex wrench, or remove the 1/8 inch NPT plug from the manifold pressure tap on the gas valve.
   d. Connect a water column manometer or similar device to manifold pressure tap.
   e. Turn gas valve ON/OFF switch to ON.
   f. Manually close blower door switch.
   g. Jumper R and W thermostat connections on control to start furnace. See Fig. 38.

h. Remove regulator adjustment cap from gas valve pressure regulator and turn adjusting screw (3/16 or smaller flat-tipped screwdriver) counterclockwise (out) to decrease input rate or clockwise (in) to increase input rate. See Fig. 64.

NOTICE

DO NOT set manifold pressure less than 2.8-in. w.c. (697 Pa) or more than 3.8 in. w.c. (947 Pa) for natural gas. If required manifold pressure is outside this range, change main burner orifices to obtain manifold pressure in this range.

i. When correct input is obtained, replace cap that conceals gas valve regulator adjustment screws. Main burner flame should be clear blue, almost transparent See Fig. 65.

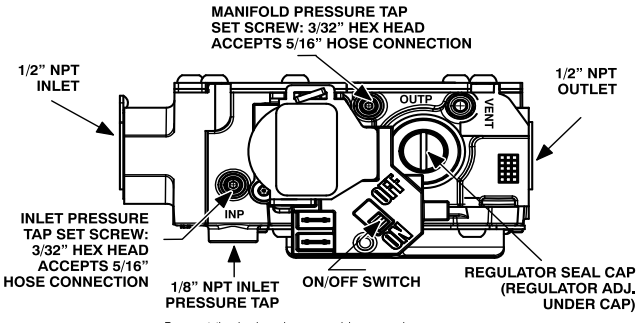

A170140

Fig. 64 – Gas Valve with Tower Pressure Ports

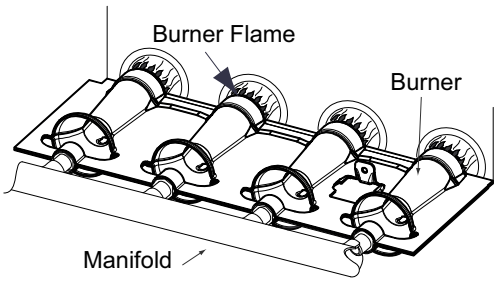

A11461

Fig. 65 – Burner Flame

j. Remove jumper R to W.

2. Verify natural gas input rate by clocking meter.

NOTE: Contact your HVAC distributor or gas supplier for metric gas meter Tables, if required.

a. Turn off all other gas appliances and pilots served by the meter.
b. Jumper R to W.
c. Run furnace for 3 minutes.
d. Measure time (in second) for gas meter to complete one revolution and note reading. The 2 or 5 cubic feet dial provides a more accurate measurement of gas flow.
e. Refer to Table 25 for cubic ft. of gas per hr.
f. Multiply gas rate cu ft./hr by heating value (BTUh/cu ft.) to obtain input rate.
g. If clocked rate does not match required input from Step 1, increase manifold pressure to increase input or decrease manifold pressure to decrease input. Repeat steps b through e until correct input is achieved. Re-install regulator seal cap on gas valve.

3. Restore furnace to normal operating condition.

a. Turn gas valve ON/OFF switch to OFF.
b. Remove water column manometer or similar device from manifold pressure tap.
c. Tighten set screw on manifold tower pressure tap with 3/32-in. hex wrench, or if ⅛-in. NPT plug was removed, apply pipe dope sparingly to end of plug and re-install in the gas valve.
d. Turn gas valve ON/OFF switch to ON.
e. Check for gas leaks and verify furnace operation.

WARNING

FIRE HAZARD

Failure to follow this warning could result in personal injury, death, and/or property damage.

Manifold pressure tap set screw must be tightened and 1/8-in. NPT pipe plug must be installed to prevent gas leaks.

Table 25 – Gas Rate (CU ft./hr)

seconds FOR 1 REV.	SIZE OF TEST DIAL 1 Cu Ft.	2 Cu Ft.	5 Cu Ft.	seconds FOR 1 REV.	SIZE OF TEST DIAL 1 Cu Ft.	2 Cu Ft.	5 Cu Ft.
10	360	720	1800	50	72	144	360
11	327	655	1636	51	71	141	355
12	300	600	1500	52	69	138	346
13	277	555	1385	53	68	136	340
14	257	514	1286	54	67	133	333
15	240	480	1200	55	65	131	327
16	225	450	1125	56	64	129	321
17	212	424	1059	57	63	126	316
18	200	400	1000	58	62	124	310
19	189	379	947	59	61	122	305
20	180	360	900	60	60	120	300
21	171	343	857	62	58	116	290
22	164	327	818	64	56	112	281
23	157	313	783	66	54	109	273
24	150	300	750	68	53	106	265
25	144	288	720	70	51	103	257
26	138	277	692	72	50	100	250
27	133	267	667	74	48	97	243
28	129	257	643	76	47	95	237
29	124	248	621	78	46	92	231
30	120	240	600	80	45	90	225
31	116	232	581	82	44	88	220
32	113	225	563	84	43	86	214
33	109	218	545	86	42	84	209
34	106	212	529	88	41	82	205
35	103	206	514	90	40	80	200
36	100	200	500	92	39	78	196
37	97	195	486	94	38	76	192
38	95	189	474	96	38	75	188
39	92	185	462	98	37	74	184
40	90	180	450	100	36	72	180
41	88	176	439	102	35	71	178
42	86	172	429	104	35	69	173
43	84	167	419	106	34	68	170
44	82	164	409	108	33	67	167
45	80	160	400	110	33	65	164
46	78	157	391	112	32	64	161
47	76	153	383	116	31	62	155
48	75	150	375	120	30	60	150
49	73	147	367				

Table 26 – Orifice Size and Manifold Pressure (in. w.c.) for Gas Input Rate

ALTITUDE RANGE ft (m)		AVG GAS HEAT VALUE AT ALT (Btu/cu ft)	SPECIFIC GRAVITY OF NATURAL GAS*							
			0.58		0.60		0.62		0.64	
			Orifice No.	Manifold Pressure	Orifice No.	Manifold Pressure	Orifice No.	Manifold Pressure	Orifice No.	Manifold Pressure
U.S.A. and Canada	0 (0) to 2000 (610)	900	43	3.8	42	3.2	42	3.3	42	3.4
		925	43	3.6	43	3.7	43	3.8	42	3.2
		950	43	3.4	43	3.5	43	3.6	43	3.7
		975	**44**	**3.7**	**44**	**3.8**	43	3.4	43	3.6
		1000	**44**	**3.5**	**44**	**3.6**	**44**	**3.8**	43	3.4
		1025	**44**	**3.3**	**44**	**3.5**	**44**	**3.6**	**44**	**3.7**
		1050	**44**	**3.2**	**44**	**3.3**	**44**	**3.4**	**44**	**3.5**
		1075	45	3.7	45	3.8	**44**	**3.3**	**44**	**3.4**
		1100	46	3.7	46	3.8	45	3.8	**44**	**3.2**
USA 2001 (611) to 3000 (914) Canada 2001 (611) to 4500 (1372)		800	42	3.4	42	3.5	42	3.6	42	3.7
		825	43	3.8	42	3.3	42	3.4	42	3.5
		850	43	3.6	43	3.7	42	3.2	42	3.3
		875	43	3.4	43	3.5	43	3.7	43	3.8
		900	**44**	**3.7**	**44**	**3.8**	43	3.5	43	3.6
		925	**44**	**3.5**	**44**	**3.6**	44	3.8	43	3.4
		950	**44**	**3.3**	**44**	**3.4**	44	3.6	**44**	**3.7**
		975	**44**	**3.2**	**44**	**3.3**	44	3.4	**44**	**3.5**
		1000	46	3.0	45	3.1	45	3.2	**44**	**3.3**
USA Only	3001 (915) to 4000 (1219)	775	42	3.3	42	3.4	42	3.5	42	3.6
		800	43	3.8	42	3.2	42	3.3	42	3.4
		825	43	3.6	43	3.7	43	3.8	42	3.2
		850	**44**	**3.8**	43	3.5	43	3.6	43	3.7
		875	**44**	**3.6**	**44**	**3.7**	43	3.4	43	3.5
		900	**44**	**3.4**	**44**	**3.5**	**44**	**3.7**	**44**	**3.8**
		925	**44**	**3.2**	**44**	**3.4**	**44**	**3.5**	**44**	**3.6**
		950	45	3.1	**44**	**3.2**	**44**	**3.3**	**44**	**3.4**
USA Only	4001 (1220) to 5000 (1524)	750	42	3.3	42	3.4	42	3.5	42	3.6
		775	43	3.7	43	3.8	42	3.3	42	3.4
		800	43	3.5	43	3.6	43	3.7	43	3.8
		825	**44**	**3.8**	43	3.4	43	3.5	43	3.6
		850	**44**	**3.5**	**44**	**3.7**	**44**	**3.8**	43	3.4
		875	**44**	**3.3**	**44**	**3.5**	**44**	**3.6**	**44**	**3.7**
		900	**44**	**3.2**	**44**	**3.3**	**44**	**3.4**	**44**	**3.5**
		925	46	3.0	45	3.1	**44**	**3.2**	**44**	**3.3**
USA Only	5001 (1525) to 6000 (1829)	725	42	3.2	42	3.3	42	3.4	42	3.5
		750	43	3.7	43	3.8	42	3.2	42	3.3
		775	43	3.4	43	3.5	43	3.7	43	3.8
		800	**44**	**3.7**	**44**	**3.8**	43	3.4	43	3.5
		825	**44**	**3.5**	**44**	**3.6**	**44**	**3.7**	**44**	**3.8**
		850	**44**	**3.3**	**44**	**3.4**	**44**	**3.5**	**44**	**3.6**
		875	45	3.1	**44**	**3.2**	**44**	**3.3**	**44**	**3.4**
		900	46	2.9	46	3.0	45	3.1	**44**	**3.2**
USA Only	6001 (1830) to 7000 (2133)	675	42	3.4	42	3.5	42	3.6	42	3.8
		700	42	3.2	42	3.3	42	3.4	42	3.5
		725	43	3.6	43	3.7	43	3.8	42	3.3
		750	43	3.4	43	3.5	43	3.6	43	3.7
		775	**44**	**3.6**	**44**	**3.7**	43	3.4	43	3.5
		800	**44**	**3.4**	**44**	**3.5**	**44**	**3.6**	**44**	**3.7**
		825	**44**	**3.2**	**44**	**3.3**	**44**	**3.4**	**44**	**3.5**
		850	46	3.0	45	3.1	**44**	**3.2**	**44**	**3.3**

Table 26 – Orifice Size and Manifold Pressure (in. w.c.) for Gas Input Rate (Continued)

ALTITUDE RANGE ft (m)		AVG GAS HEAT VALUE AT ALT (Btu/cu ft)	SPECIFIC GRAVITY OF NATURAL GAS*							
			0.58		0.60		0.62		0.64	
			Orifice No.	Manifold Pressure	Orifice No.	Manifold Pressure	Orifice No.	Manifold Pressure	Orifice No.	Manifold Pressure
USA Only	7001 (2134) to 8000 (2438)	650	42	3.4	42	3.5	42	3.6	42	3.7
		675	43	3.8	42	3.2	42	3.3	42	3.4
		700	43	3.5	43	3.7	43	3.8	42	3.2
		725	**44**	**3.8**	43	3.4	43	3.5	43	3.6
		750	**44**	**3.5**	**44**	**3.7**	**44**	**3.8**	43	3.4
		775	**44**	**3.3**	**44**	**3.4**	**44**	**3.5**	**44**	**3.7**
		800	45	3.1	**44**	**3.2**	**44**	**3.3**	**44**	**3.4**
		825	46	2.9	46	3.0	45	3.1	**44**	**3.2**
USA Only	8001 (2439) to 9000 (2743)	625	42	3.4	42	3.5	42	3.6	42	3.7
		650	43	3.8	42	3.2	42	3.3	42	3.4
		675	43	3.5	43	3.6	43	3.7	42	3.2
		700	**44**	**3.7**	43	3.4	43	3.5	43	3.6
		725	**44**	**3.5**	**44**	**3.6**	**44**	**3.7**	**44**	**3.8**
		750	**44**	**3.3**	**44**	**3.4**	**44**	**3.5**	**44**	**3.6**
		775	45	3.0	**44**	**3.2**	**44**	**3.3**	**44**	**3.4**
USA Only	9001 (2744) to 10000 (3048)	600	42	3.3	42	3.4	42	3.6	42	3.7
		625	43	3.7	42	3.2	42	3.3	42	3.4
		650	43	3.5	43	3.6	43	3.7	43	3.8
		675	**44**	**3.7**	**44**	**3.8**	43	3.4	43	3.5
		700	**44**	**3.4**	**44**	**3.5**	**44**	**3.7**	**44**	**3.8**
		725	**44**	**3.2**	**44**	**3.3**	**44**	**3.4**	**44**	**3.5**

*. Orifice numbers shown in **BOLD** are factory installed.

Adjust Temperature Rise

NOTE: Blower door must be installed when taking temperature rise reading. Leaving blower door off will result in incorrect temperature measurements, due to possible changes in duct static pressure and airflow.

⚠ CAUTION

FURNACE DAMAGE HAZARD

- Failure to follow this caution may result in:
  Overheating the heat exchangers or condensing flue gases in heat exchanger areas not designed for condensate.
- Shortened furnace life.
- Component damage.

Temperature rise must be within limits specified on furnace rating plate. Recommended operation is at midpoint of rise range or slightly above.

Set temperature rise. The furnace must operate within the temperature rise ranges specified on the furnace rating plate. Do not exceed temperature rise range specified on unit rating plate. Determine the temperature rise as follows:

This furnace must operate within the temperature rise ranges specified on the furnace rating plate. Determine the air temperature as follows:

1. Place duct thermometers in return and supply ducts as close to furnace as possible. Be sure thermometers do not “see” heat exchangers so that radiant heat does not affect thermometer readings. This is particularly important with straight run ducts.
2. When thermometer readings stabilize, subtract return-air temperature from supply-air temperature to determine temperature rise.

If the temperature rise is outside this range, check the following:

a. Gas input for heating operation.

b. Derate for altitude if applicable.
c. Return and supply ducts for excessive restrictions causing static pressures greater than 0.50-in. w.c.

WARNING

ELECTRICAL SHOCK HAZARD

Failure to follow this warning could result in personal injury or death.

Blower access door switch opens 115V power to control. No component operation can occur unless switch is closed. Caution must be taken when manually closing this switch.

3. Adjust air temperature rise by adjusting blower speed. Increase blower speed to reduce temperature rise. Decrease blower speed to increase temperature rise
4. Turn thermostat down below room temperature and remove blower access door.
5. Refer to FURNACE CONTROL PROGRAMMING AND NAVIGATION on p50 for instructions on adjusting the blower speed.
6. Repeat steps a through e until temperature rise is within range on rating plate.
7. When correct input rate and temperature rise is achieved, turn gas valve ON/OFF switch to OFF.

WARNING

FIRE HAZARD

Failure to follow this warning could result in personal injury, death, and/or property damage.

Reinstall manifold pressure tap plug in gas valve to prevent gas leak.

8. Remove manometer or similar device from gas valve.
9. Reinstall manifold pressure tap plug in gas valve.

WARNING

FURNACE OVERHEATING HAZARD

Failure to follow this caution may result in reduced furnace life.

Recheck temperature rise. It must be within limits specified on the rating plate. Recommended operation is at the mid-point of rise range or slightly above.

Adjust Heating Blower-OFF Delay

1. Adjust heating blower-OFF delay. The blower-OFF delay has four adjustable settings from 90 second to 180 second. Refer to FURNACE CONTROL PROGRAMMING AND NAVIGATION on p50 for instructions.
   Factory off delay setting is 120 second.
2. Set airflow CFM for cooling. See Table 19-Air Delivery CFM (with filter).
3. Adjust cooling blower-OFF delay. Refer to FURNACE CONTROL PROGRAMMING AND NAVIGATION on p50 for instructions.

Check Safety Controls

The flame sensor, gas valve, and pressure switch were all checked in the Start-up procedure section as part of normal operation.

1. Check Main Limit Switch
   This control shuts off combustion system and energizes air-circulating blower motor, if furnace overheats. By using this method to check the temperature limit control, it can be established that the limit is functioning properly and that the limit will operate if there is a restricted return-air supply or motor failure. If the limit control does not function during this test, the cause must be determined and corrected.
   a. Run furnace for at least 5 minutes.
   b. Gradually block off return air with a piece of cardboard or sheet metal until the limit trips.
   c. Unblock return air to permit normal circulation.
   d. Burners will re-light when furnace cools down.
2. Check Pressure Switch(es)
   This control proves operation of the draft inducer blower.
   a. Turn off 115V power to furnace.
   b. Disconnect inducer motor lead wires from wire harness.
   c. Turn on 115V power to furnace.
   d. Set thermostat to “call for heat” and wait 1 minute. When low pressure switch is functioning properly, hot surface igniter should **NOT** glow and control diagnostic light flashes a status code (3 1 . 1). If hot surface igniter glows when inducer motor is disconnected, shut down furnace immediately.
   e. Determine reason low pressure switch did not function properly and correct condition.
   f. Turn off 115V power to furnace.
   g. Reconnect inducer motor wires, replace door, and turn on 115V power.
   h. Blower will run for 90 seconds before beginning the call for heat again.
   i. Furnace should ignite normally.

Checklist

- Put away tools and instruments. Clean up debris.
- Check Input/Output gas pressure
- Check heat rise per application static pressure
- Cooling CFM per application static pressure
- Verify that blower-OFF delay time is selected as desired.
- Verify that blower and burner access doors are properly installed.
- Cycle test furnace with room thermostat.
- Check operation of accessories per manufacturer’s instructions.
- Review User’s Guide with owner.
- **Attach literature packet to furnace**.

SERVICE AND MAINTENANCE PROCEDURES

Untrained personnel can perform basic maintenance functions such as cleaning and replacing air filters. All other operations must be performed by trained service personnel. A qualified service person should inspect the furnace once a year.

WARNING

FIRE, INJURY OR DEATH HAZARD

Failure to follow this warning could result in personal injury, death and/or property damage.

The ability to properly perform maintenance on this equipment requires certain knowledge, mechanical skills, tools, and equipment. If you do not possess these, do not attempt to perform any service and maintenance on this equipment other than those procedures recommended in the Owner’s Manual.

CAUTION

ENVIRONMENTAL HAZARD

Failure to follow this caution may result in environmental pollution.

Remove and recycle all components or materials (i.e. oil, refrigerant, control board, etc.) before unit final disposal.

CAUTION

ELECTRICAL OPERATION HAZARD

Failure to follow this caution may result in improper furnace operation or failure of furnace.

Label all wires prior to disconnection when servicing controls. Wiring errors can cause improper and dangerous operation.

WARNING

ELECTRICAL SHOCK, FIRE OR EXPLOSION HAZARD

Failure to follow this warning could result in personal injury or death, or property damage.

Before installing, modifying, or servicing system, main electrical disconnect switch must be in the OFF position and install a lockout tag. There may be more than one disconnect switch. Lock out and tag switch with a suitable warning label. Verify proper operation after servicing. Always reinstall access doors after completing service and maintenance.

GENERAL

These instructions are written as if the furnace is installed in an upflow application. An upflow furnace application is where the blower is located below the combustion and controls section of the furnace, and conditioned air is discharged upward. Since this furnace can be installed in any of the 4 positions shown in Fig. 2, you must revise your orientation to component location accordingly.

ELECTRICAL CONTROLS AND WIRING

The electrical ground and polarity for 115V wiring must be properly maintained. Refer to Fig. 33 for field wiring information and to Fig. 61 for furnace wiring information.

WARNING

ELECTRICAL OPERATION HAZARD

Failure to follow this warning could result in personal injury or death.

There may be more than one electrical supply to the furnace. Check accessories and cooling unit for additional electrical supplies that must be shut off during furnace servicing. Lock out and tag switch with a suitable warning label.

NOTE: If the polarity is not correct, the STATUS LED on the control will flash rapidly and Status code (10 . 1) is displayed. This will prevent the furnace from heating. The control system also requires an earth ground for proper operation of the control and flame-sensing electrode.

The 24V circuit contains an automotive-type, 3A fuse located on the control (see Fig. 38). Any shorts of the 24V wiring during installation, service, or maintenance will cause this fuse to blow. If fuse replacement is required, use ONLY a 3A fuse. The control LED will display status code (24 . 1) when fuse needs to be replaced.

Proper instrumentation is required to service electrical controls. The control in this furnace is equipped with a Status Code LED (Light-Emitting Diode) and Major/Minor 3-digit codes to aid in installation, servicing, and troubleshooting. Status codes can be viewed at the sight glass in blower access door. The furnace control LED is either ON continuously, rapid flashing, or a code composed of two digits. The major status code is displayed on the LED indicator through the door with the first digit being the number of short flashes and the second digit being the number of long flashes. The major status code is displayed in the first two digits of the display. The minor status code is displayed in the third digit.

For an explanation of status codes, refer to service label located on blower access door, or Fig. 60 and the troubleshooting guide by scanning the QR code or see Fig. 71 for a brief Troubleshooting Guide.

Retrieving Stored Fault Codes

The stored status code will not be erased from the control memory, if 115V or 24V power is interrupted. See the Service Label, Fig. 60 for more information.

1. To retrieve the last 7 fault codes, proceed with the following:

NOTE: NO thermostat signal may be present at control, and all blower-OFF delays must be completed.

a. Leave 115V power to furnace turned on.
b. Remove access door.
c. Depress blower door switch to energize the control board.

CAUTION

SHOCK HAZARD

Failure to follow this caution could result in personal injury.

Do not tape or permanently allow the door switch to be bypassed. Temporarily press the door switch with one hand while accessing the service buttons with your other hand. Do not touch uninsulated electrical components.

d. Press menu/select button until (FLt) is displayed.
e. Press Next/Option button to cycle through the fault history. Faults remain in memory for 72 hours of powered operation after the last fault occurs. Faults may be manually cleared by selecting (CLr) with the menu/select button.

CARE AND MAINTENANCE

WARNING

FIRE OR EXPLOSION HAZARD

Failure to follow this warning could result in personal injury, death and/or property damage.

Never store flammable or combustible materials on, near, or in contact with the furnace, such as:

1. Spray or aerosol cans, rags, brooms, dust mops, vacuum cleaners, or other cleaning tools.
2. Soap powders, bleaches, waxes or other cleaning compounds, plastic or plastic containers, gasoline, kerosene, cigarette lighter fluid, dry cleaning fluids, or other volatile fluids.
3. Paint thinners and other painting compounds, paper bags, or other paper products. Exposure to these materials could lead to corrosion of the heat exchangers.

For continuing high performance and to minimize possible furnace failure, periodic maintenance must be performed on this furnace. Consult your local dealer about proper frequency of maintenance and the availability of a maintenance contract.

CAUTION

CUT HAZARD

Failure to follow this caution may result in personal injury.

Sheet metal parts may have sharp edges or burrs. Use care and wear appropriate protective clothing, safety glasses and gloves when handling parts, and servicing furnaces.

⚠ WARNING

ELECTRICAL SHOCK AND FIRE HAZARD

Failure to follow this warning could result in personal injury, death, and/or property damage.

Turn off the gas and electrical supplies to the furnace and install lockout tag before performing any maintenance or service. Follow the operating instructions on the label attached to the furnace.

⚠ WARNING

CARBON MONOXIDE POISONING AND FIRE HAZARD

Failure to follow this warning could result in personal injury, death and/or property damage.

Never operate furnace without a filter or filtration device installed. Never operate a furnace with filter or filtration device access doors removed.

The minimum maintenance on this furnace is as follows:

1. Check and clean air filter each month or more frequently if required. Replace if torn.
2. Check blower motor and wheel for cleanliness each heating and cooling season. Clean as necessary.
3. Check electrical connections for tightness and controls for proper operation each heating season. Service as necessary.
4. Inspect burner compartment before each heating season for rust, corrosion, soot or excessive dust. If necessary, have furnace and burner serviced by a qualified service agency.
5. Inspect the vent pipe/vent system before each heating season for water leakage, sagging pipes or broken fittings. Have vent pipes/vent system serviced by a qualified service agency.
6. Inspect any accessories attached to the furnace such as a humidifier or electronic air cleaner. Perform any service or maintenance to the accessories as recommended in the accessory instructions.

Cleaning and/or Replacing Air Filter

⚠ WARNING

CARBON MONOXIDE POISONING AND FIRE HAZARD

Failure to follow this warning could result in personal injury, death and/or property damage.

Never operate furnace without a filter or filtration device installed. Never operate a furnace with filter or filtration device access doors removed.

The air filter type may vary depending on the application or orientation. The filter is external to the furnace casing. There are no provisions for an internal filter with this furnace. See FILTER ARRANGEMENT on p19.

NOTE: If the filter has an airflow direction arrow, the arrow must point toward the blower.

To clean or replace filters, proceed as follows:

⚠ WARNING

ELECTRICAL SHOCK, FIRE OR EXPLOSION HAZARD

Failure to follow this warning could result in personal injury or death, or property damage.

Before installing, modifying, or servicing system, main electrical disconnect switch must be in the OFF position and install a lockout tag. There may be more than one disconnect switch. Lock out and tag switch with a suitable warning label. Verify proper operation after servicing. Always reinstall access doors after completing service and maintenance.

1. Turn off electrical supply to furnace.
2. Remove filter cabinet door.
3. Slide filter out of cabinet.
4. If equipped with permanent, washable filter, clean filter by spraying cold tap water through filter in opposite direction of airflow. Rinse filter and let dry. Oiling or coating of the filter is not recommended.
5. If equipped with factory specified disposable media filter, replace only with a factory specified media filter of the same size.
6. Slide filter into cabinet.
7. Replace filter cabinet door.
8. Turn on electrical supply to furnace.

Blower Motor and Wheel Maintenance

To ensure long life, economy, and high efficiency, clean accumulated dirt and grease from blower wheel and motor annually.

The inducer and blower motors are pre-lubricated and require no additional lubrication. These motors can be identified by the absence of oil ports on each end of the motor.

The following items should be performed by a qualified service technician. Clean blower motor and wheel as follows:

1. Turn off electrical supply to furnace.
2. Remove blower door.
3. All factory wires can be left connected, but field thermostat and accessory wiring may need to be disconnected depending on their length and routing.
4. If the vent and combustion air pipe passes through the blower compartment, it will be necessary to remove the pipes from the blower compartment.

Disconnect the vent and combustion air pipe by:

a. Loosen the clamps or screw on the vent couplings and combustion air pipe external to the furnace.
b. Separate the pipes from the couplings and move them aside.
c. Loosen the clamps on the vent couplings and combustion air pipe located on the blower shelf.
d. Separate the pipes from the blower compartment and set aside.
e. Remove the couplings from the pipe adapters and set aside.
f. After servicing the blower, reverse steps a through e, resealing combustion air pipe per installation instructions.
g. Tighten all clamps 15 lb -in.

See Fig. 66 for steps 5 through 14.

5. Remove screws that secure blower assembly to blower shelf and slide blower assembly out of furnace. Detach ground wire and disconnect blower motor harness plugs from blower motor.

NOTE: Blower wheel is fragile. Use care.

6. Clean blower wheel and motor by using a vacuum with soft brush attachment. Be careful not to disturb balance weights (clips) on blower wheel vanes. Do not bend wheel or blades as balance will be affected.

7. If greasy residue is present on blower wheel, remove wheel from the blower housing and wash it with an appropriate degreaser. To remove wheel:
   a. Mark blower wheel location on shaft before disassembly to ensure proper reassembly.
   b. Loosen setscrew holding blower wheel on motor shaft.

NOTE: Mark blower mounting arms and blower housing so each arm is positioned at the same hole location during reassembly.

   c. Mark blower wheel orientation and cutoff plate location to ensure proper reassembly.
   d. Remove screws that secure cutoff plate and remove cutoff plate from housing.
   e. Remove bolts holding motor mounts to blower housing and slide motor and mounts out of housing.
   f. Remove blower wheel from housing.
   g. Clean wheel per instructions on degreaser cleaner. Do not get degreaser in motor.
8. Reassemble motor and blower wheel by reversing items 7b through 7f. Ensure wheel is positioned for proper rotation.
9. Torque motor mounting bolts to 40 ±10 lb-in. when reassembling.
10. Torque blower wheel set screw to 160 ±20 lb-in. when reassembling.
11. Verify that blower wheel is centered in blower housing and set screw contacts the flat portion of the motor shaft. Loosen set screw on blower wheel and reposition if necessary.
12. Spin the blower wheel by hand to verify that the wheel does not rub on the housing.
13. Reinstall blower assembly in furnace.
14. Reinstall 2 screws that secure blower assembly to blower deck.
15. Reconnect blower leads to furnace control. Refer to furnace wiring diagram, and connect thermostat leads if previously disconnected.

NOTE: Be sure to attach ground wire and reconnect blower harness plugs to blower motor.

WARNING

ELECTRICAL OPERATION HAZARD

Failure to follow this warning could result in personal injury or death.

Blower door switch opens 115V power to control. No component operation can occur unless switch is closed. Caution must be taken when manually closing this switch for service purposes.

16. Downflow or horizontal furnaces with vent pipe through furnace only:
   a. Install and connect short piece of vent pipe inside furnace to existing vent.
   b. Connect vent connector to vent elbow.
17. Turn on electrical supply. Manually close blower door switch. Check for proper rotation and speed changes between heating If outdoor temperature is below 70°F (21°C), turn off circuit breaker to outdoor unit before running furnace in the cooling cycle. Turn outdoor circuit breaker on after completing cooling cycle. See Fig. 38.

NOTE: If R-W/W1 thermostat terminals are jumpered at the time blower door switch is closed, blower will run for 90 seconds before beginning a heating cycle.

   a. Perform component self-test as shown at the bottom of the SERVICE label, located on the control door.
   b. Verify blower is rotating in the correct direction
18. If furnace is operating properly, RELEASE BLOWER DOOR SWITCH. Remove any jumpers or reconnect any disconnected thermostat leads. Replace blower door.
19. Turn on gas supply and cycle furnace through one complete heating cycle. Verify the furnace temperature rise as shown in (ADJUSTMENTS on p56). Adjust temperature rise as shown.

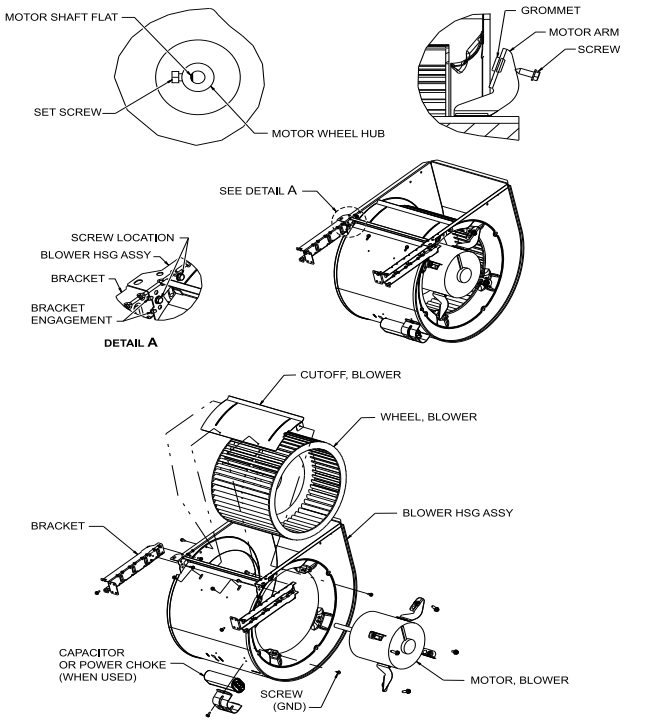

Fig. 66 – Blower Assembly

Cleaning Burners and Flame Sensor

The following items must be performed by a qualified service technician. If the burners develop an accumulation of light dirt or dust, they may be cleaned by using the following procedure:

NOTE: Use a back-up wrench on the gas valve to prevent the valve from rotating on the manifold or damaging the mounting to the burner assembly.

WARNING

ELECTRICAL SHOCK AND FIRE HAZARD

Failure to follow this warning could result in personal injury, death, and/or property damage.

Turn off the gas and electrical supplies to the furnace and install lockout tag before performing any maintenance or service. Follow the operating instructions on the label attached to the furnace.

Refer to Fig. 67.

1. Disconnect power at external disconnect, fuse or circuit breaker.
2. Turn off gas at external shut-off or gas meter.
3. Remove control door and set aside.
4. Turn electric switch on gas valve to OFF.
5. Disconnect the gas pipe from gas valve and remove pipe from the furnace casing.
6. Remove individual wires from terminals on gas valve.
7. Disconnect Hot Surface Igniter (HSI) wires from HSI.
8. Disconnect Flame Sensor wire from Flame Sensor.
9. Support the manifold and remove the 4 screws that secure the manifold assembly to the burner assembly and set aside. Note the location of the green/yellow wire and ground terminal.

10. Inspect the orifices in the manifold assembly for blockages or obstructions. Remove orifice and clean or replace orifice.
11. Remove the four screws that attach the top plate of the casing to the furnace.
12. Raise top plate up slightly and prop it up with a small piece of wood or folded cardboard.
13. Support the burner assembly and remove the screws that attach the burner assembly to the heat exchanger cell panel.
14. Remove wires from both rollout switches.
15. Slide one-piece burner out of slots on sides of burner assembly.
16. Remove the flame sensor from the burner assembly.
17. (Optional) Remove the Hot Surface Igniter (HSI) and bracket from the burner assembly.
18. Check igniter resistance. Nominal resistance is 40 to 70 ohms at room temperature and is stable over the life of the igniter.
19. Clean burner with a brush and a vacuum.
20. Clean the flame sensor with fine steel wool (0000 grade). Do not use sand paper or emery cloth.

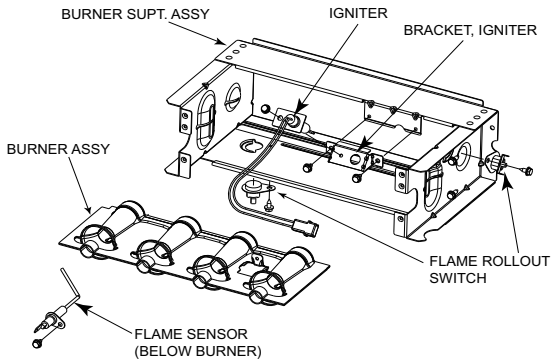

A11403

Fig. 67 – Burner Assembly

To reinstall burner assembly:

1. Install the Hot Surface Igniter (HSI) and bracket in burner assembly.
2. Install flame sensor on burner.
3. Align the edges of the one-piece burner with the slots in the burner assembly and slide the burners forward until they are fully seated in the burner assembly.
4. Align the orifices in the manifold assembly with the support rings on the end of the burner.
5. Insert the orifices in the support rings of the burners.

NOTE: If manifold does not fit flush against the burner, do not force the manifold on the burner assembly. The burners are not fully seated forward in the burner assembly. Remove the manifold and check burner positioning in the burner assembly before re-installing the manifold.

6. Attach the green/yellow wire and ground terminal to one of the manifold mounting screws.
7. Install the remaining manifold mounting screws.
8. Check the igniter alignment. See Fig. 67, Fig. 68, and Fig. 69.
9. Attach the wires to the roll-out switches.
10. Align the burner assembly with the openings in the primary cell inlet panel and attach the burner assembly to the cell panel.
11. Connect the wire for the flame sensor.
12. Connect the wire for the Hot Surface Igniter.

NOTE: Use propane-resistant pipe dope to prevent leaks. Do not use PTFE thread-seal tape.

13. Install the gas pipe to the gas valve.
14. Check for gas leaks with a commercially available soap solution made specifically for the detection of leaks.
15. Turn gas on at electric switch on gas valve and at external shut-off or meter
16. Turn power on at external disconnect, fuse or circuit breaker.
17. Run the furnace through two complete heating cycles to check for proper operation
18. Install control door when complete.

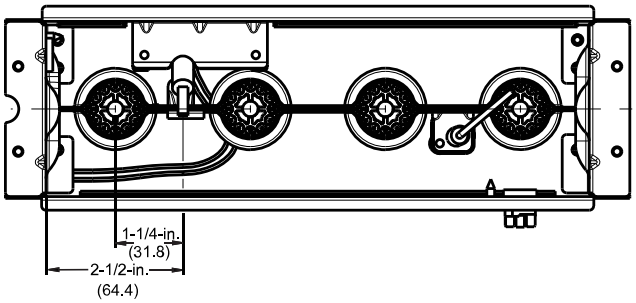

A11405

Fig. 68 – Igniter Position - Top View

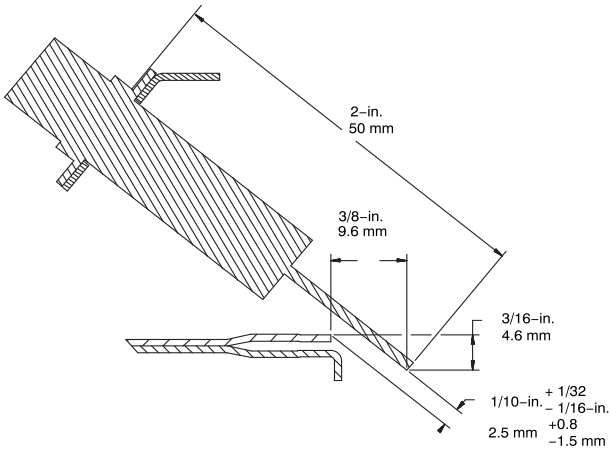

L12F041

Fig. 69 – Igniter Position - Side View

Servicing Hot Surface Igniter

The igniter does **NOT** require annual inspection. Check igniter resistance before removal. See Fig. 67, Fig. 68, and Fig. 69.

1. Turn off gas and electrical supplies to furnace.
2. Remove control door.
3. Disconnect igniter wire connection.
4. Check igniter resistance. Igniter resistance is affected by temperature. Only check resistance when the igniter is at room temperature.
   a. Using an ohm meter, check resistance across both igniter leads in connector.
   b. Cold reading should be between 40 ohms and 70 ohms.

⚠ WARNING

FIRE OR EXPLOSION HAZARD

Failure to follow this warning could result in personal injury, death, and/or property damage.

Never purge a gas line into a combustion chamber. Never test for gas leaks with an open flame. Use a commercially available soap solution made specifically for the detection of leaks to check all connections. A fire or explosion may result causing property damage, personal injury or loss of life.

5. Remove igniter assembly.

a. Using a 1/4-in. driver, remove the two screws that secure the igniter mounting bracket to the burner assembly See Fig. 67.
b. Carefully withdraw the igniter and bracket assembly through the front of the burner assembly without striking the igniter on surrounding parts.
c. Inspect igniter for signs of damage or failure.
d. If replacement is required, remove the screw that secures the igniter on igniter bracket and remove the igniter.

6. To replace igniter and bracket assembly, reverse items 5a through 5d.
7. Reconnect igniter harness to the igniter, dressing the igniter wires to ensure there is no tension on the igniter itself. See Fig. 67.
8. Turn on gas and electrical supplies to furnace.
9. Verify igniter operation by initiating control board self-test feature or by cycling thermostat.
10. Replace control door.

Flushing Collector Box and Drainage System

WARNING

ELECTRICAL SHOCK AND FIRE HAZARD

Failure to follow this warning could result in personal injury, death, and/or property damage.

Turn off the gas and electrical supplies to the furnace and install lockout tag before performing any maintenance or service. Follow the operating instructions on the label attached to the furnace.

1. Turn off gas and electrical supplies to furnace.
2. Remove control door.
3. Disconnect pressure switch tube from pressure switch port.

NOTE: Ensure the pressure switch tube disconnected from the pressure switch is higher than the collector box opening or water will flow out of tube.

4. Remove the collector box plug from the top port on the upper corner of the collector box. See Fig. 62.
5. Attach a funnel with a flexible tube to port on the collector box.
6. Flush inside of collector box with water until discharge water from condensate trap is clean and runs freely.
7. Repeat steps 4 thru 6 with middle plug on upper corner of collector box.
8. Remove the pressure switch tube from the collector box.

NOTE: Do **NOT** blow into tube with tube connected to the pressure switch.

9. Clean pressure switch port on collect box with a small wire. Shake any water out of pressure switch tube.
10. Reconnect tube to pressure switch and pressure switch port.
11. Remove the relief tube from the port on the collector box and the trap.
12. Clean the relief port on collect box and the trap with a small wire. Shake any water out of the tube.
13. Reconnect relief tube to trap and collector box ports.

Cleaning Condensate Drain and Trap

NOTE: If the condensate trap is removed, a new gasket between the trap and collector box is required. Verify a condensate trap gasket is included in the service kit or obtain one from your local distributor.

1. Disconnect power at external disconnect, fuse or circuit breaker.
2. Turn off gas at external shut-off or gas meter.
3. Remove control door and set aside.
4. Turn electric switch on gas valve to OFF.
5. Disconnect external drain from condensate drain elbow or drain extension pipe inside the furnace and set aside.
6. Disconnect the condensate trap relief hose from collector box port and condensate trap.

NOTE: If condensate has a heat pad attached to the trap, trace the wires for the pad back to the connection point and disconnect the wires for the heat pad.

7. Remove the screw that secures the condensate trap to the collector box, remove the trap and set aside.
8. Remove the trap gasket from the collector box if it did not come off when the trap was removed.
9. Discard the old trap gasket.
10. Rinse condensate trap in warm water until trap is clean.
11. Flush condensate drain lines with warm water. Remember to check and clean the relief port on the collector box.
12. Shake trap dry.
13. Clean port on collector box with a small wire.

To re-install Condensate Drain and Trap:

1. Remove adhesive backing from condensate trap gasket
2. Install gasket on collector box
3. Align the condensate trap with the drain opening on the collector box and secure the trap with the screw
4. Attach the relief hose to the relief port on the condensate trap and collector box.
5. Secure tubing to prevent any sags or traps in the tubing.
6. Connect condensate drain elbow or drain extension elbow to the condensate trap
7. Connect the leads of the condensate heat pad (if used)
8. Connect external drain piping to the condensate drain elbow or drain extension pipe.
9. Turn gas on at electric switch on gas valve and at external shut-off or meter
10. Turn power on at external disconnect, fuse or circuit breaker.
11. Run the furnace through two complete heating cycles to check for proper operation
12. Install control door when complete.

Checking Heat Pad Operation (If Applicable)

In applications where the ambient temperature around the furnace is 32°F (0°C) or lower, freeze protection measures are required. If this application is where heat tape has been applied, check to ensure it will operate when low temperatures are present.

NOTE: The Heat Pad, when used, should be wrapped around the condensate drain trap. There is no need to use heat tape within the furnace casing. Most heat tapes are temperature activated, and it is not practical to verify the actual heating of the tape. Check the following:

1. Check for signs of physical damage to heat tape such as nicks, cuts, abrasions, gnawing by animals, etc.
2. Check for discolored heat tape insulation. If any damage or discolored insulation is evident, replace heat tape.
3. Check that heat tape power supply circuit is on.

Cleaning Heat Exchangers

The following items must be performed by a qualified service technician.

Primary Heat Exchangers

If the heat exchangers get an accumulation of light dirt or dust on the inside, they may be cleaned by the following procedure:

NOTE: If the heat exchangers get a heavy accumulation of soot and carbon, both the primary and secondary heat exchangers should be replaced rather than trying to clean them thoroughly due to their intricate

design. A build-up of soot and carbon indicates that a problem exists which needs to be corrected, such as improper adjustment of manifold pressure, insufficient or poor quality combustion air, improper vent termination, incorrect size or damaged manifold orifice(s), improper gas, or a restricted heat exchanger (primary or secondary). Action must be taken to correct the problem.

1. Turn off gas and electrical supplies to furnace.

WARNING

FIRE OR EXPLOSION HAZARD

Failure to follow this warning could result in personal injury, death, and/or property damage.

Never purge a gas line into a combustion chamber. Never test for gas leaks with an open flame — fire or explosion may occur. Use a commercially available soap solution made specifically for the detection of leaks to check all connections.

WARNING

ELECTRICAL SHOCK, FIRE OR EXPLOSION HAZARD

Failure to follow this warning could result in personal injury or death, or property damage.

Before installing, modifying, or servicing system, main electrical disconnect switch must be in the OFF position with lockout tag and warning label attached. There may be more than one disconnect switch. Verify proper operation after servicing. Always reinstall access doors after completing service and maintenance.

WARNING

ELECTRICAL SHOCK AND FIRE HAZARD

Failure to follow this warning could result in personal injury, death, and/or property damage.

Turn off the gas and electrical supplies to the furnace and install lockout tag before performing any maintenance or service. Follow the operating instructions on the label attached to the furnace.

2. Remove control door.
3. Disconnect wires or connectors to flame rollout switch, gas valve, igniter, and flame sensor.
4. Using backup wrench, disconnect gas supply pipe from furnace gas control valve.
5. Remove two screws attaching top filler plate and rotate upwards to gain access to screws attaching burner assembly to cell panel.
6. Remove screws attaching burner assembly to cell panel. See Fig. 67.

NOTE: Burner cover, manifold, gas valve, and burner assembly should be removed as one assembly.

7. Clean heat exchanger openings with a vacuum and a soft brush. See Fig. 70.

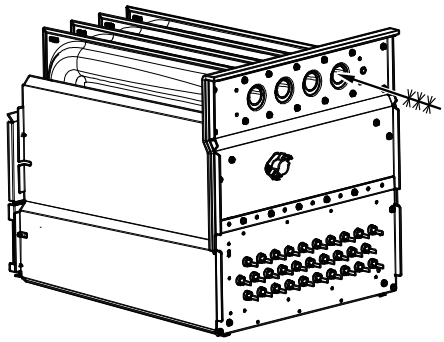

A11273

Fig. 70 – Cleaning Heat Exchanger Cell

NOTE: After cleaning, inspect the heat exchangers to ensure they are free of all foreign objects that may restrict flow of combustion products.

8. Reverse items 6 through 1 for reassembly.
9. Refer to furnace wiring diagram and reconnect wires to flame rollout switch, gas valve, igniter, and flame sensor.
10. Turn on gas and electrical supplies to furnace.
11. Check furnace operation through 2 complete heat operating cycles. Look at burners. Burner flames should be clear blue, almost transparent. See Fig. 65.
12. Check for gas leaks.
13. Replace main furnace door.

Secondary Heat Exchangers

The condensing side (inside) of the secondary heat exchanger CANNOT be serviced or inspected without complete removal of the heat exchanger assembly. Detailed information on heat exchanger removal can be obtained from your Distributor.

WINTERIZATION

CAUTION

UNIT AND PROPERTY DAMAGE HAZARD

Failure to follow this caution may result in unit component or property damage.

If the furnace is installed in an unconditioned space where the ambient temperatures may be 32°F (0°C) or lower, freeze protection measures must be taken to prevent minor property or product damage.

Since the furnace uses a condensing heat exchanger, some water will accumulate in the unit as a result of the heat transfer process. Therefore, once it has been operated, it cannot be turned off and left off for an extended period of time when temperatures will reach 32°F (0°C) or lower unless winterized. Follow these procedures to winterize your furnace:

CAUTION

UNIT COMPONENT DAMAGE HAZARD

Failure to follow this caution may result in damage to the furnace and other property damage.

Do not use ethylene glycol (automotive antifreeze coolant or equivalent). Failure of plastic components may occur.

1. Obtain propylene glycol (RV/swimming pool antifreeze or equivalent).
2. Turn off gas and electrical supplies to your furnace.
3. Remove furnace control door.

4. Remove the top unused rubber plug from the port on the collector box opposite the condensate trap. See Fig. 62.
5. Connect a field supplied 3/8-in. (9.5-mm) ID tube to the open port on the collector box.
6. Insert a field supplied funnel into the tube.
7. Pour one quart (liter) of anti-freeze solution into the funnel/tube. Antifreeze should run through the inducer housing, overfill condensate trap and flow to an open drain.
8. Replace the rubber plug in the port on the collector box.
9. Remove the middle unused rubber plug from the port on the collector box opposite the condensate trap. See Fig. 62.
10. Repeat Steps 5 through 8.
11. If a condensate pump is used, check with pump manufacturer to verify pump is safe for use with antifreeze used. Allow pump to start and pump anti-freeze to open drain.
12. Replace main door.
13. When furnace is re-started, flush condensate pump with clear water to check for proper operation before re-starting furnace.
14. Propylene glycol need not be removed before re-starting furnace.

SEQUENCE OF OPERATION

NOTE: Furnace control must be grounded for proper operation or control will lock out. Control is grounded through green/yellow wire routed to gas valve and manifold bracket screw. Using the schematic diagram in Fig. 61, follow the sequence of operation through the different modes. Read and follow the wiring diagram very carefully.

NOTE: If a power interruption occurs during a call for heat (W), the control will start a 90-second blower-only ON period two second after power is restored, if the thermostat is still calling for gas heating. The LED light will flash code 12 and display will show (12 . 1) during the 90-second period, after which the LED will be ON continuous, as long as no faults are detected. After the 90-second period, the furnace will respond to the thermostat normally.

The blower door must be installed for power to be conducted through the blower door interlock switch ILK to the furnace control CPU, transformer TRAN, inducer motor IDM, blower motor BLWM, hot-surface igniter HSI, and gas valve GV.

1. **Heating**
   See Fig. 38 and Fig. 39 for thermostat connections.
   The wall thermostat "calls for heat," closing the R-to-W circuit.
   The furnace control performs a self-check, verifies the pressure switch contacts LPS and HPS are open, and starts the inducer motor IDM.
   a. **Inducer Prepurge Period—**As the inducer motor IDM comes up to speed, the collector box pressure switch contacts LPS close, 24 VAC power is supplied for a field installed humidifier at the HUM terminal and the control begins a 15-second prepurge period. The inducer housing pressure switch contacts HPS are ignored until one minute after the gas valve closes.
   b. **Igniter Warm-Up**—At the end of the prepurge period, the Hot-Surface Igniter HSI is energized for a 17-second igniter warm-up period.
   c. **Trial-for-Ignition Sequence**—When the igniter warm-up period is completed, the main gas valve relay contacts GVR close to energize the gas valve GV, the gas valve opens. The gas valve GV permits gas flow to the burners where it is ignited by the HSI. Five second after the GVR closes, a 2-second flame proving period begins. The HSI igniter will remain energized until the flame is sensed or until the 2-second flame proving period begins.
   d. **Flame-Proving**—When the burner flame is proved at the flame-proving sensor electrode FSE, the furnace control CPU begins the blower-ON delay period and continues to hold the gas valve GV open. If the burner flame is not proved within two second, the control CPU will close the gas valve GV, and the control CPU will repeat the ignition sequence for up to three more Trials-For-Ignition before going to Ignition-Lockout. **Lockout will be reset** automatically after three hours or by momentarily interrupting 115 VAC power to the furnace, or by interrupting 24 VAC power at second1 or second2 to the furnace control CPU (not at W, G, R, etc.).
   If flame is proved when flame should not be present, the furnace control CPU will lock out of Gas-Heating mode and operate the inducer motor IDM until flame is no longer proved.
   e. **Blower-ON Delay**—If the burner flame is proven, the blower motor is turned on at HEAT speed 25 seconds after the gas valve GV is energized.
   Simultaneously, the electronic air cleaner terminal EAC-1 is energized and remains energized as long as the blower motor BLWM is energized.
   f. **Blower-OFF Delay**—When the thermostat is satisfied, the R-to-W circuit is opened, de-energizing the gas valve GV, stopping gas flow to the burners, and de-energizing the humidifier terminal HUM. The inducer motor IDM will remain energized for a 15-second post-purge period. The blower motor BLWM and air cleaner terminal EAC-1 will remain ON for 90, 120, 150, or 180 seconds (depending on the blower-OFF delay selection). The furnace control CPU is factory-set for a 120-second blower-OFF delay.
2. **Cooling Mode**
   See Fig. 38 and Fig. 39 for thermostat connections.
   The thermostat "calls for cooling." The thermostat closes the R-to-Y circuits. The R-to-Y circuit starts the outdoor unit, and the R-to-G and Y circuits start the furnace blower motor BLWM on COOL speed. The electronic air cleaner terminal EAC-1 is energized with 115 VAC when the blower motor BLWM is operating. When the thermostat is satisfied, the R-to-Y circuits are opened. The outdoor unit will stop, and the furnace blower motor BLWM will continue operating on the COOL speed for an additional 5, 30, or 90 seconds (depending on the cooling blower-OFF delay selection). The furnace CPU is factory set for a 90-second cooling blower-OFF delay
3. **Continuous Fan Mode**
   When the R-to-G circuit is closed by the thermostat, the blower motor BLWM will operate at the continuous-blower speed selected. Terminal EAC-1 is energized as long as the blower motor BLWM is ON. During a call for heat, the blower BLWM will stop during igniter warm-up (17 seconds), ignition (7 seconds), and blower-ON delay (25 seconds), allowing the furnace heat exchangers to heat up more quickly, then restarts at the end of the blower-ON delay period at HEAT speed.
   In heating, the furnace control CPU will hold the blower motor BLWM at HEAT speed during the selected blower-OFF delay period before reverting to continuous-blower speed.
   When the thermostat "calls for high-cooling", the blower motor BLWM will continue to operate at COOL speed. When the thermostat is satisfied, the blower motor BLWM will continue to operate on COOL speed based on the cooling blower-OFF delay setting before reverting back to continuous fan speed. When the R-to-G circuit is opened, the blower motor BLWM will continue operating for an additional 5 seconds, if no other function requires blower motor BLWM operation.
4. **Heat pump**
   See Fig. 38 and Fig. 39 for thermostat connections. When installed with a heat pump, the furnace control automatically changes the timing sequence to avoid long blower off times during demand defrost cycles. When the R-to-W-and-Y or R-to-W-and-Y-and-G circuits are energized the furnace control CPU will continue to turn on the blower motor BLWM at HEAT speed, and begin a heating cycle. The blower motor BLWM will remain on until the end of the prepurge period, then shut off for 24 second then come back on at

HEAT speed. When the W input signal disappears, the furnace control begins a normal inducer post-purge period and the blower switches to COOL speed after a 3-second delay. If the R-to-W-and-Y-and-G signals disappear at the same time, the blower motor BLWM will remain on for the selected blower-OFF delay period. If the R-to-W-and-Y signals disappear, leaving the G signal, the blower motor BLWM will continue running the blower motor at CONTINUOUS FAN speed after the selected heating blower-OFF delay period is completed.

Troubleshooting

Refer to the service label (see Fig. 60). The Troubleshooting Guide (see Fig. 71) can be a useful tool in isolating furnace operation problems. Beginning with the word "Start," answer each question and follow the appropriate arrow to the next item. The Guide will help to identify the problem or failed component. After replacing any component, verify correct operation sequence.

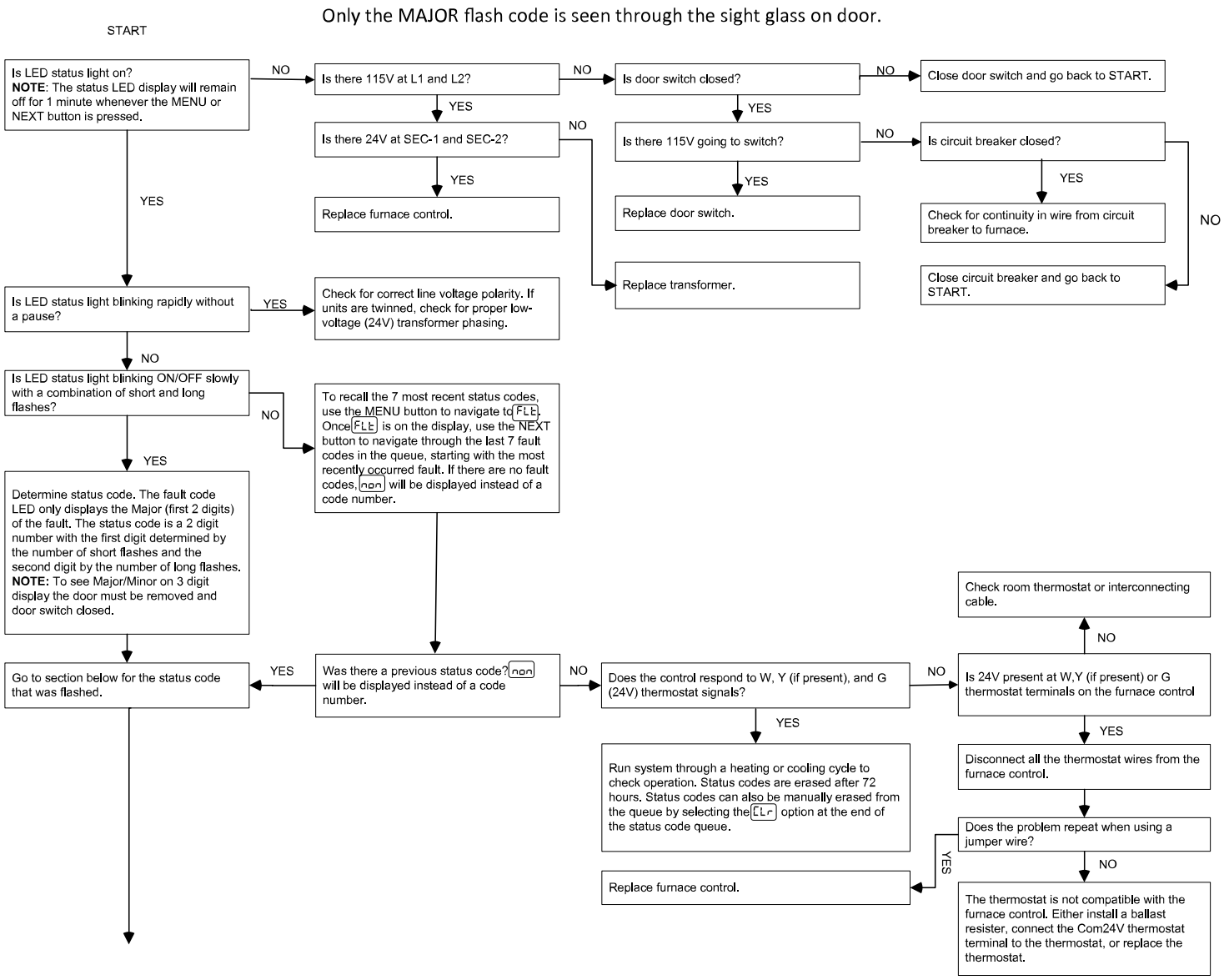

A221116

Only the MAJOR flash code is seen through the sight glass on door.

10.1 L1 POLARITY FAULT - Rapid flash LED. Polarity of incoming 115V power is reversed.

Check for:
- Correct line voltage (115V) wiring polarity at each junction.
- If units are twinned, check for proper low-voltage (24V) transformer phasing.

12.1 "W" ON at power up – Normal operation. Blower runs for 90 seconds, if unit is powered up during a call for heat (R-W closed) or when (R-W opens) during the blower on-delay period.

13.1 LIMIT CIRCUIT LOCKOUT – Lockout occurs if the limit or flame rollout is open longer than 3 minutes. Control will auto-reset after 3 hours. See code 33.

14.1 IGNITION LOCKOUT – System failed to ignite gas and prove flame in 4 attempts. Control will auto-reset after 3 hours. See status code 34.1.
14.2 FLAME LOST LOCKOUT – Flame signal was lost 3 times after heating blower on delay. Control will auto-reset after 3 hours. See status code 34.3.
14.3 FLAME LOST LOCKOUT – Flame signal was lost 7 times during a single heat request. See status code 34.2 to 34.4.

Check for (applies to all):
- Correct manifold pressure and gas firing rate
- Gas inlet pressure fluctuations
- See Code 34 for additional help

21.1 GAS HEATING LOCKOUT - 24VAC sensed on gas valve when shouldn't be. Turn off power and wait 5 minutes to retry.

Check for:
- Stuck closed gas valve relay on control.
- Miswire or short on gas valve wire.

22.1 FALSE FLAME – Flame is proved while gas valve is de-energized. Inducer will run until faut is cleared.

Check for:
- Stuck open or leaky gas valve.

23.1 STUCK MAIN pressure switch

Check for:
- Obstructed pressure tube.
- Pressure switch stuck closed.

31.2 OPEN SECONDARY PRESSURE SWITCH – HPS did not close within one minute after gas valve closed or has reopened.
31.3 SECONDARY PRESSURE SWITCH LOCKOUT

If it opens during blower on-delay period, blower will come on for the selected blower off-delay.

Check for (applies to all):
- Failed to close secondary pressure switch after three trials
- Excessive wind
- Restricted vent
- Defective inducer motor
- Low inlet gas pressure (if LGPS used)
- Inadequate combustion air supply
- Proper vent sizing
- Disconnected or obstructed pressure tubing
- Condensate drainage restricted or blocked

32.1 OPEN MAIN PRESSURE SWITCH – If LPS is open longer than 5 minutes or has reopened, inducer shuts off for 15 minutes before retry. If opens during blower on-delay period, blower will come on for the selected blower off-delay.

See Code 31.2 and 31.3 for troubleshooting.

33.1 A SWITCH HAS OPENED IN THE MAIN LIMIT – Indicates the limit or flame rollout is open. Blower will run for 4 minutes or until open switch remakes whichever is longer. If open longer than 3 minutes, code changes to lockout #13. If open less than 3 min. status code #33 continues to flash until blower shuts off. Flame rollout switch and BVSS requires manual reset

Check for:
- Dirty filter or restricted duct system
- Loose blower wheel
- Defective switch or connections
- Defective blower motor
- Improper gas input adjustment

45.1 CONTROL FAILURE – flame circuit fault, memory mismatch or sequence error.
45.2 CONTROL FAILURE – gas valve relay will not close.
45.3 CONTROL FAILURE – EEPROM memory issue.

For code 45, cycle power, if code 45 repeats, replace control.

46.1 MOMENTARY LOSS of power – Heating operation will stop and will restart once the power fluctuation is resolved.

A221119

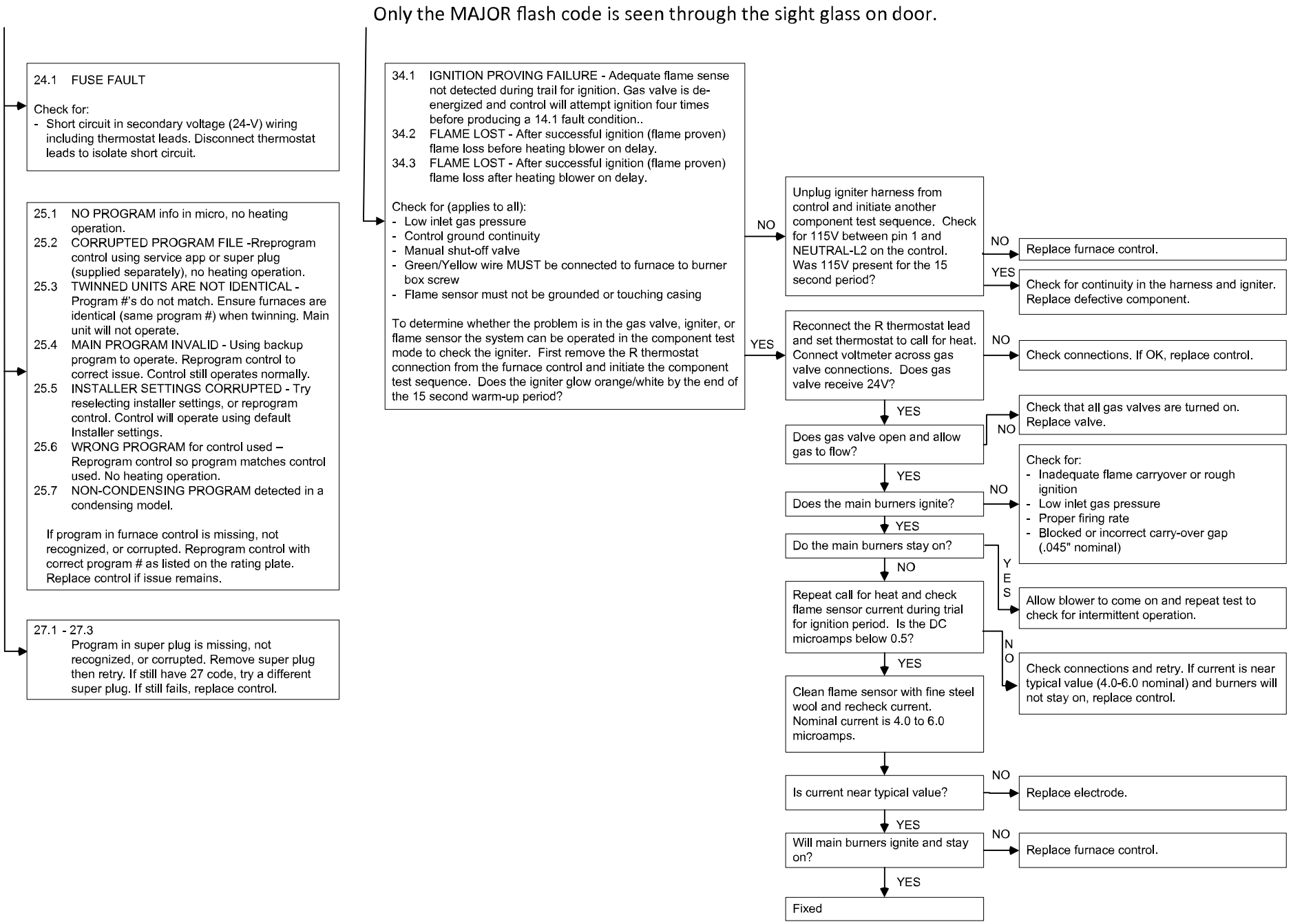

Fig. 71 – Troubleshooting Guide

GAS FURNACE CHECKLIST

Installation Date: _____

Equipment		
	Model	Serial #
Furnace		
Thermostat		
Humidifier		
Indoor Coil		
Outdoor Unit		

Furnace Location_____ Installed altitude _____

Furnace Orientation: ____Upflow ___Downflow ___Horizontal Right ___Horizontal Left

Inspect unit to ensure that all unused casing openings have knockouts or casing plugs.

Gas Adjustment

LOCAL GAS HEAT CONTENT_____(btu/cu. ft.) SPECIFIC GRAVITY_____/cu. ft.
(contact your local gas utility-not required for propane)

INLET SUPPLY PRESSURE** _____ in. W.C. ORIFICE #_____
MANIFOLD PRESSURE: High fire_____ in. W.C. Low fire_____ in. W.C.
**Supply pressure should be checked with furnace and all other gas appliances running

FIRING RATE: (CLOCKED METER FOR NAT. GAS – assure only furnace is running)
Firing rate = heat content (btu/cu. ft.) X size of the dial (cu. ft/rev) X # of rev. per 60 sec (rev/sec) X 3600 (sec/hr)
Example- (1050 btu/cu. ft.) X (0.5 cu. ft./rev.) X (2 revs./60sec) X (3600 sec/hr)= 63,000 btu/hr
OR use the "Gas Rate" chart in the startup and adjustment section of the installation manual

HIGH HEAT_____ btu/hr LOW HEAT _____ btu/hr

LEAVING AIR TEMPERATURE _____(F) high _____ (F) low

RETURN AIR TEMPERATURE _____(F) high _____ (F) low

TEMPERATURE RISE _____(F) high _____ (F) low

Temperature rise is equal to the supply air temp minus the return air temp @ steady state operation.
The supply temperature should be measured away from the line of sight of the Heat Exchanger

+90 % VENTING SYSTEM

Pipe Dia_____ # of Elbows_____ Total Length _____ft.

Termination Type: (circle one) Concentric 2 pipe (std)

Termination Location: (circle one) Roof Sidewall

MID-EFFICIENCY VENTING SYSTEM

METAL: (circle one) B vent Chimney Liner

Vent Dia_____Total Ht._____ft. Vent Conn. Dia_____ Conn. Length _____ft. # of Elbows_____

Connector Type: Single Wall B Vent Connector Rise Above Furnace _____ft.

A230014

Fig. 72 – Gas Furnace Checklist

PARTS REPLACEMENT INFORMATION GUIDE

Casing Group

Blower door
Bottom plate
Control door
Door knob assembly
Top filler plate

Electrical Group

3-Amp fuse
Circuit board
Super plug
Control box
Door switch
Junction box
Limit switch(es)
Transformer

Blower Group

Blower housing
Blower motor
Blower wheel
Cut-off plate
Power choke (where used)

Filter Group

Filter(s)
Media Cabinet (when used)

Gas Control Group

Burner
Flame sensor
Gas valve
Hot surface igniter
Manifold
Orifice

Heat Exchanger Group

Containment plate
Coupling box
Heat exchanger assembly
Primary HX cell panel
secondondary HX assembly
Tubing gaskets

Inducer Group

Collector box
Condensate trap
Condensate trap elbow

TO OBTAIN INFORMATION ON PARTS: Consult your installing dealer or a licensed Heating and Air Conditioning company of your choice:

CAC/BDP
a division of Carrier Corporation
7310 West Morris Street
Indianapolis, IN 46231 U.S.A.

Have available the model number, series number, and serial number located on the unit rating plate to ensure correct replacement part.

MODEL NOMENCLATURE

MODEL	MAJOR SERIES	COOLING CAPACITY	HEATING INPUT	WIDTH	MINOR SERIES	VARIATIONS
PG92MSA	A	30	040	A	A	A

⚠ WARNING

FIRE, EXPLOSION, ELECTRICAL SHOCK AND CARBON MONOXIDE POISONING HAZARD

Failure to follow this warning could result in dangerous operation, personal injury, death or property damage.
Improper installation, adjustment, alteration, service, or maintenance can cause personal injury, property damage, or death. Consult a qualified installer, service agency, or your local gas supplier for information or assistance. The qualified installer or service agency must use only factory-authorized replacement parts, kits, or accessories when modifying this product.

© 2026 Carrier. All rights reserved.
Edition Date: 07/26
Catalog No: IM-PG92MSAA-03
A Proud Member of the Carrier Family
Replaces: IM-PG92MSAA-02
Manufacturer reserves the right to change, at any time, specifications and designs without notice and without obligations.