355BAV Preferred™ Plus 95i
95% AFUE Upflow Only Variable-Speed
Condensing Gas Furnace
Series C, Input Rates 60,000 thru 120,000 Btuh

bryant®

Product Data

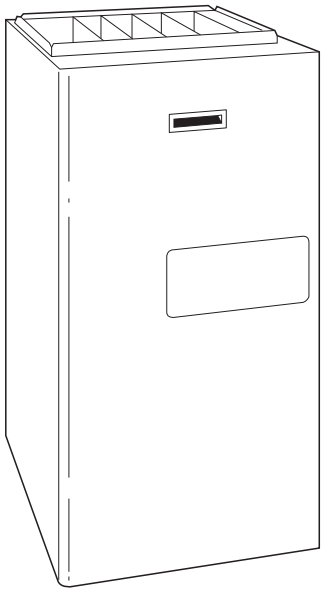

A05085

Perfect Heat™ Perfect Humidity™

Preferred™ SERIES

Building on our industry-leading condensing furnace technology, the model 355BAV is our greatest innovation in comfort control and operating efficiency.

Modern technology provides the Plus 95i™ design with great reliability, high efficiency, and ultra-quiet operation. Efficiencies are above 95 percent Annual Fuel Utilization Efficiency (AFUE). The model 355BAV Plus 95i™ Condensing Gas Furnace incorporates our patented Perfect Heat™ Control. This control interacts with a 2-stage gas valve, a variable-speed inducer motor, and a variable-speed blower motor, allowing the Plus 95i™ to adjust combustion air, firing rate, and airflow to maintain peak efficiency throughout the operating cycle.

The Perfect Heat™ system provides the ultimate in heating comfort while minimizing electrical and gas consumption. The Plus 95i also features Perfect Humidity control when combined with a Bryant Thermidistat™ Control and air conditioner or heat pump system.

For even greater comfort and convenience, match the Plus 95i furnace with a two-speed heat pump to create a HYBRID HEAT® Dual Fuel system.

FEATURES

Perfect Heat™/Perfect Humidity™ Control—This intelligent heating control constantly monitors operating conditions to adjust for greater efficiency and comfort. The control operates 90% of the time in low-heat and reserves the high-firing rate for times when the heating demand is high. The Perfect Heat/Perfect Humidity control has these additional features:

- dedicated terminals for electrical connection of electronic air cleaner and humidifier
- adjustable blower off time
- LED fault code display to aid in servicing
- selectable airflow to match cooling unit
- emergency heat setting
- setting to increase airflow for bypass-type humidifier
- selectable constant fan airflow
- a multi-zone setting for use with zoned air distribution systems a special dehumidification function increases cooling comfort by providing greater humidity removal in summer months
- controls humidity even when there is no heating or cooling demand

Three-Pass Primary Heat Exchangers—This design accelerates heat transfer and extracts heat that conventional heat exchangers waste up the flue. The primary heat exchanger is made of aluminized steel for corrosion resistance.

Flow-Through Secondary Heat Exchangers—Each cell is laminated with our patented Everlastic™ polypropylene for greater resistance to corrosion and is epoxy coated externally to prevent oxidation. This breakthrough in heating technology (Patent No. 4,738,307) helps extend the life of the furnace for years of reliable performance. The heat exchangers are positioned in the furnace to extract additional heat from the combustion products regardless of furnace orientation.

Perfect Light™ Igniter—Bryant's unique SiN igniter is not only physically robust but it is also electrically robust. It is capable of running at line voltage and does not require complex voltage regulators as do other brands. This unique feature further enhances the reliability of Bryant's 355BAV gas furnace and continues Bryant's tradition of technology leadership and innovation in providing a reliable and durable product.

Fan On Plus™—Improves comfort all year long by allowing you to select the continuous fan speed right at the thermostat.

SmartEvap™—Allows your system to reduce summertime humidity levels by nearly 10% over standard systems.

Upflow Only Design—Allows the model 355BAV to be installed in an upflow orientation only. Factory configured for upflow applications. The model 355BAV is available in 5 heat/airflow combinations.

Direct Venting—This furnace can be installed as a 2-pipe/Direct vent furnace.

2-Stage Gas Valve—The 355BAV has a 2-stage gas valve to vary the amount of gas being used from low-heat to high-heat stage.

Fully-Insulated Casing—Foil-faced insulation in the heat exchanger section cuts the heat loss; double-density insulation in the blower section reduces noise levels. The casing also has the required openings for left- or right-side connection of gas, electric, drain, and vent connections.

Variable-Speed Motors—Variable-speed operation improves the comfort levels in the home. Variable-Speed motors are also more economical to operate than standard motors. They have the ability to adapt to changing conditions and provide consistent, comfortable, and quiet heating. Motors and electronic controls are covered by a 5-year limited warranty.

Sealed Combustion System—This furnace brings in combustion air from outside the furnace, which results in especially quiet operation.

Monoport Inshot Burners—Produce precise air-to-gas mixture for clean burning. The large monoport on the inshot or injection type burners seldom, if ever, needs cleaning.

Quality Registration—The 355BAV is engineered and manufactured under an ISO 9001 registered quality system.

Certifications—The 355BAV units are CSA (A.G.A. and C.G.A.) design certified for use with natural and propane gases, as well as AHRI efficiency rating certified. The furnace is factory shipped for use with natural gas. An CSA (A.G.A. and C.G.A.) certified gas conversion kit is required to convert furnace for use with propane gas. The model 355BAV meets California Air Quality Management District emission requirements.

Use of the AHRI Certified TM Mark indicates a manufacturer's participation in the program. For verification of certification for individual products, go to www.ahridirectory.org.

DIMENSIONS

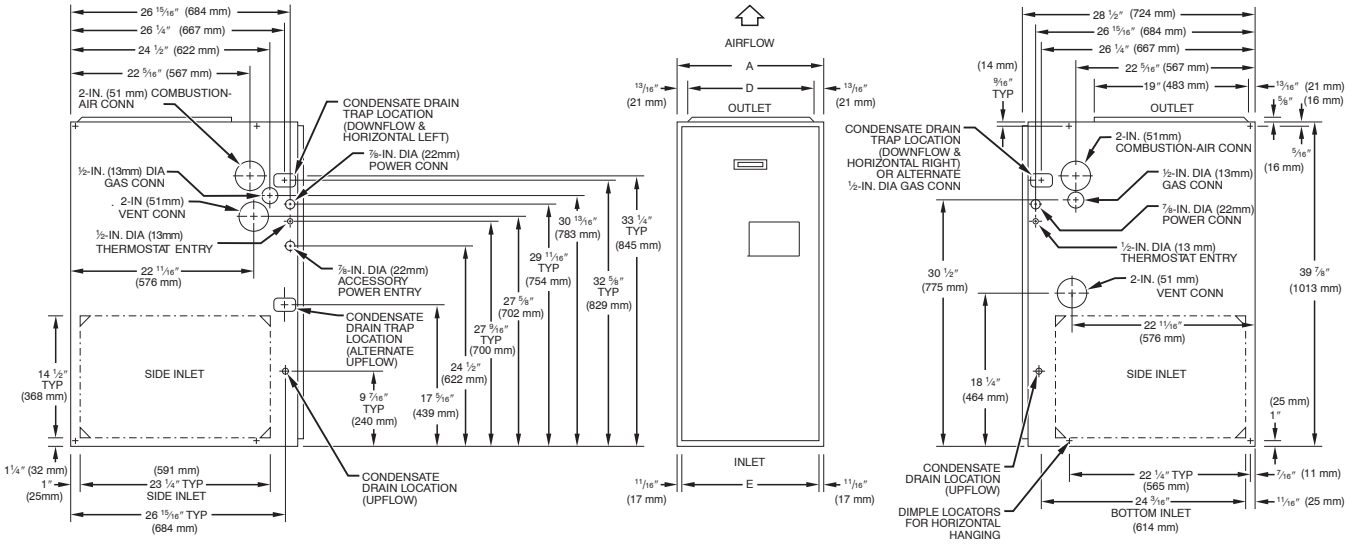

NOTES:
1. Minimum return-air openings at furnace, based on metal duct. If flex duct is used, see flex duct manufactureris recommendations for equivalent diameters.
2. Minimum return-air opening at furnace:
   a. For 800 CFM–16-in. (406mm) round or 14 1/2 (368 mm)x 12-in. (305 mm) rectangle
   b. For 1200 CFM–20-in. (508mm) round or 14 1/2 (368mm)x 19 1/2-in. (495mm) rectangle
   c. For 1600 CFM–22-in. (559mm) round or 14 1/2 (368mm)x 23 1/4-in.(591mm) rectangle
   d. For airflow requirements above 1800 CFM, see Air Delivery table in Product Data literature for specific use of single side inlets. The use of both side inlets, a combination of 1 side and the bottom, or the bottom only will ensure adequate return air openings for airflow requirements above 1800 CFM.

A05124

Dimensions - In. (mm)

UNIT SIZE	A	D	E
060–14 / 042060	17–1/2 / 445	15–7/8 / 403	16 / 406
080–14 / 042080	21 / 533	19–3/8 / 492	19–1/2 / 495
080–20 / 060080	21 / 533	19–3/8 / 492	19–1/2 / 495
100–20 / 060100	21 / 533	19–3/8 / 492	19–1/2 / 495
120–20 / 060120	24–1/2 / 622	22–7/8 / 581	23 / 584

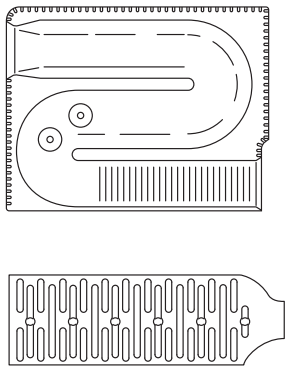

A92505

Heat Exchangers

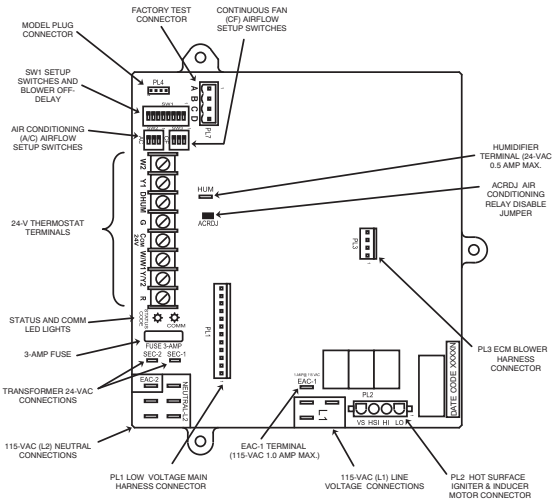

A09679

Control Center

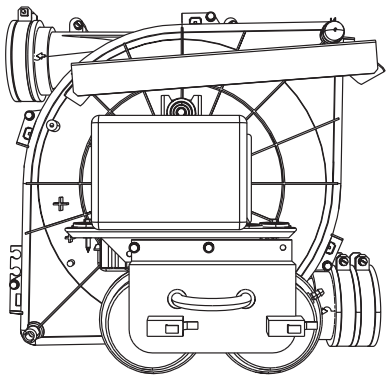

A02286

Inducer Assembly

A06450

PHYSICAL DATA

DESCRIPTION	UNIT SIZE				
	042060	042080	060080	060100	060120
Direct–Drive Motor Hp (ECM)	1/2	1/2	1	1	1
Motor Full Load Amps	7.7	7.7	12.8	12.8	12.8
RPM (Nominal)—Speeds	Variable 250 — 1300				
Blower Wheel Diameter X Width (in.)	10 X 7	11 X 10	11 X 10	11 X 10	11 X 10
Filter Size (in.) Nominal A (Washable)	(1) 16 X 25 X 1	(1) 20 X 25 X 1	(1) 20 X 25 X 1	(1) 20 X 25 X 1	(1) 24 X 25 X 1
Shipping Weight (lb)	170	182	204	203	234
Limit Control	SPST				
Heating Blower Control (Off Delay)	Selectable 90, 120, 150, or 180 SEC Intervals				
Burners (Monoport)	3	4	4	5	6
Gas Connection Size	1/2–in. NPT				
Gas Valve (Redundant) Manufacturer Minimum Inlet Pressure (in. wc) Maximum Inlet Pressure (in. wc)	White–Rodgers 4.5 (Natural Gas) 13.6 (Natural Gas)				
Ignition Device	Hot Surface –SiN				

PERFORMANCE DATA

DESCRIPTION		UNIT SIZE				
		042060	042080	060080	060100	060120
Certified Temp Rise Range (°F)	Low	40—70	40—70	40—70	40—70	40—70
	High	35—65	40—70	35—65	45—75	45—75
Certified Ext Static Pressure (ESP) (in. wc)	Heating	0.12	0.15	0.15	0.20	0.20
	Cooling	0.50	0.50	0.50	0.50	0.50
Airflow CFM*	Heating Low	635 (700†)	860 (945†)	880 (970†)	1105 (1215†)	1325 (1455†)
	Heating High	1070	1245	1490	1525	1900
	Cooling (Max)	1400	1372	1975	1950	2060
Output Capacity Btuh‡ (ICS)	Low	37,000	50,000	50,000	63,000	75,000
	High	56,000	75,000	75,000	94,000	113,000
AFUE%‡		95.0	95.0	95.0	95.0	95.0
Input Btuh**	Low	39,000	52,000	52,000	65,000	78,000
	High	60,000	80,000	80,000	100,000	120,000

* Airflow shown is for bottom only return–air supply with factory–supplied 1–in. washable filter(s). For air delivery above 1800 CFM, see Air Delivery table for other options.

† Low heat CFM when low–heat rise adjustment switch (SW1–3) on furnace control is used.

‡ AFUE and capacity in accordance with U.S. Government DOE test procedures.

** Gas input ratings are certified for elevations to 2000 ft. For elevations above 2000 ft, reduce ratings 2% for each 1000 ft above sea level. In Canada, derate the unit 5% for elevations from 2000 to 4500 ft above sea level.

ELECTRICAL DATA

UNIT SIZE		042060	042080	060080	060100	060120
Unit Volts–Hertz–Phase		115–60–1				
Operating Voltage Range (Min–Max)*		104–127				
Maximum Unit Amps		8.9	8.9	13.8	13.8	13.8
Minimum Wire Size		14	14	12	12	12
Maxium Wire Length (ft)†		31	31	32	32	32
Maximum Fuse or Ckt Brk (Amps)‡		15	15	20	20	20
Transformer (24v)		40va				
External Control Power Available	Heating	25va				
	Cooling	34va				

* Permissible limits of the voltage range at which the unit will operate satisfactorily.
† Length shown is as measured 1 way along wire path between unit and service panel for maximum 2% voltage drop.
‡ Time–delay type is recommended.

BRYANT ACCESSORIES

DESCRIPTION	PART NO.	UNIT SIZE				
		042060	042080	060080	060100	060120
Vent Termination Kit (Bracket Only for 2 Pipes)	2–in. — KGAVT0101BRA 3–in. — KGAVT0201BRA	X	X	X	X	X
Concentric Termination Kit (Single Exit)	2–in. — KGAVT0701CVT 3–in. — KGAVT0801CVT	X	X	X	X	X
Condensate Freeze Protection Kit	KGAHT0101CFP	X	X	X	X	X
Germicidal Air Purifier	Model GAPA	X	X	X	X	X
Condensate Neutralizer Kit (obtained thru RCD)	P908–0001	X	X	X	X	X
Electronic Air Cleaner	Model EACA	X	X	X	X	X
Mechanical Air Cleaner	Model FILCAB or EZXCAB	X	X	X	X	X
Humidifier	Model HUM	X	X	X	X	X
Heat Recovery Ventilator	Model HRV	X	X	X	X	X
Energy Recovery Ventilator	Model ERV	X	X	X	X	X
UV Lights	Model UVL	X	X	X	X	X
EZ Flex Media Filter with end caps – 16–in. (9 pack)	EXPXXLMC0016	X				
EZ Flex Media Filter with end caps – 20–in. (9 pack)	EXPXXLMC0020		X	X	X	
EZ Flex Media Filter with end caps – 24–in. (6 pack)	EXPXXLMC0024					X
Replacement EZ Flex Filter – 16–in. (10 pack)	EXPXXFIL0016	X				
Replacement EZ Flex Filter – 20–in. (10 pack)	EXPXXFIL0020		X	X	X	
Replacement EZ Flex Filter – 24–in. (10 pack)	EXPXXFIL0024					X
Exterior Filter Rack – Universal, 1–in. (adjustable from 14–in. to 24–in.) with filter	KGAFR0301ALL KGAFR0306ALL (6 pack)	X	X	X	X	
Unframed Filter 1–in. — 16 x 25	KGAWF1301UFR KGAWF1306UFR (6 pack)	X	S	S	S	
Unframed Filter 1–in. — 20 x 25	KGAWF1401UFR KGAWF1406UFR (6 pack)		X	X	X	
Unframed Filter 1–in. — 24 x 25	KGAWF1501UFR KGAWF1506UFR (6 pack)					X

BRYANT ACCESSORIES (CONTINUED)

DESCRIPTION	PART NO.	UNIT SIZE				
		042060	042080	060080	060100	060120
Natural–To–Propane Gas Conversion Kit (Single Kit)*	KGANP4601ALL	X	X	X	X	X
Propane–To–Natural Gas Conversion Kit (Single Kit)	KGAPN3901ALL	X	X	X	X	X
ECM Motor Simulator (simulates the ECM blower and inducer motor to aid troubleshooting)	KGASD0301FMS	X	X	X	X	X
Door Gasket Kit	KGBAC0110DGK	X	X	X	X	X
Advanced Product Monitor (software and hardware to link pc laptop to control board)	KGAFP0301APM	X	X	X	X	X
ECM Control Replacement Module – 1/2 HP	HK44EA123	X	X			
ECM Control Replacement Module – 1 HP	HK52EA123			X	X	X
Gas Orifice Kit Size 42 (Qty 50)	KGAHA0150N42	See Installation Instructions for model, altitude, and heat value usages.				
Gas Orifice Kit Size 43 (Qty 50)	KGAHA0250N43					
Gas Orifice Kit Size 44 (Qty 50)	KGAHA0350N44					
Gas Orifice Kit Size 45 (Qty 50)	KGAHA0450N45					
Gas Orifice Kit Size 46 (Qty 50)	KGAHA0550N46					
Gas Orifice Kit Size 47 (Qty 50)	KGAHA1550N47					
Gas Orifice Kit Size 48 (Qty 50)	KGAHA850N48					
Gas Orifice Kit Size 54 (Qty 50)	KGAHA0850P54					
Gas Orifice Kit Size 55 (Qty 50)	KGAHA0750P55					
Gas Orifice Kit Size 56 (Qty 50)	KGAHA0850P56					
Gas Orifice Kit Size 1.25mm (Qty 50)	KGAHA05750125					
Gas Orifice Kit Size 1.30mm (Qty 50)	KGAHA5750130					

* Factory–authorized and field–installed. Gas conversion kits are CSA (AGA/CGA) recognized.
S – 16 x 25 filters suitable for side return on all furnace sizes.

THERMOSTAT AND ZONING CONTROL OPTIONS

NON–PROGRAMMABLE THERMOSTAT SELECTION	
T6–NAC or T2–NAC	For use with 1 speed Air Conditioner – °F/°C, Auto Changeover
T6–NHC or T2–NHC	For use with 1 speed Air Conditioner – °F/°C, Auto Changeover
T2–NRH*	For use with 2 speed Air Conditioner – °F/°C, Auto Changeover

* Model HP & 2 Stage thermostat must be field converted to air conditioner operation.

PROGRAMMABLE THERMOSTAT SELECTION	
T2–PAC	For use with 1 speed Air Conditioner – °F/°C, Auto Changeover, 7–Day Programmable
T2–PHP*	For use with 1 speed Heat Pump – °F/°C, Auto Changeover, 7–Day Programmable
T2–PRH*	For use with 2 speed Air Conditioner – °F/°C, Auto Changeover, 7–Day Programmable
T2–PAC	For use with 1 speed Air Conditioner – °F/°C, Auto Changeover, 5–2 Programmable
T2–PRH†	For use with two–stage applications – °F/°C, Auto Changeover, 7–Day Programmable
T2–PRH‡	For multi–use/stage configurations – °F/°C, Auto Changeover 7–Day Programmable

* Model HP & 2 Stage thermostat must be field converted to air conditioner operation.
† Hybrid Heat Dual Fuel system thermostat is used with furnace and heat pump application.
‡ Thermidistat can be configured multiple use and staging. It must be configured for each specific application.

ZONING CONTROL SELECTION	
ZONEBB3Z(AC/HP)01	Comfort Series Three–Zone Zone Kit
ZONEBB2KIT01–B	2–Performance Series Zoning/Temperature and Humidity Control
ZONEBB4KIT01–B	4–Performance Series Zoning/Temperature and Humidity Control
ZONEBB8KIT01–B	8–Performance Series Zoning/Temperature and Humidity Control

AIR DELIVERY - CFM (BOTTOM RETURN WITH FILTER)*

Unit Size		Operating Mode	CFM Airflow Setting	External Static Pressure Range*	External Static Pressure (ESP) In. W.C.									
					0.1	0.2	0.3	0.4	0.5	0.6	0.7	0.8	0.9	1.0
042060														
	††	Low Heat	635†	0–0.50	635	635	625	615	615					
		High Heat	1070†	0–1.0	1070	1070	1070	1070	1070	1070	1070	1070	1065	1045
	††	1–1/2–Ton A/C Cooling	525	0–0.50‡	525	525	510	495	465					
	††	2–Ton A/C Cooling	700	0–0.50‡	700	700	695	680	680					
		2–1/2–Ton A/C Cooling	875	0–1.0‡	850	870	875	875	870	860	845	825	810	805
		3–Ton A/C Cooling	1050	0–1.0	1050	1050	1050	1050	1050	1050	1050	1050	1050	1045
		3–1/2–Ton A/C Cooling	1225	0–1.0	1225	1225	1225	1225	1225	1225	1225	1225	1225	1205
		Maximum	1400	0–1.0	1400	1400	1400	1400	1400	1400	1400	1400	1380	1325
042080***														
	††	Low Heat	900†	0–0.50	860	870	880	885	885	880	870	855	850	845
		High Heat	1245†	0–1.0	1245	1245	1245	1245	1245	1245	1245	1235	1190	1145
	††	1–1/2–Ton A/C Cooling	525	0–0.50‡	515	495	490	475	465					
	††	2–Ton A/C Cooling	700	0–0.50‡	685	680	670	665	665					
		2–1/2–Ton A/C Cooling	875	0–1.0‡	830	840	850	860	860	855	840	830	825	820
		3–Ton A/C Cooling	1050	0–1.0‡	1050	1050	1050	1050	1050	1045	1040	1025	1015	1000
		3–1/2–Ton A/C Cooling	1225	0–1.0‡	1225	1225	1225	1225	1225	1225	1225	1225	1185	1140
		Maximum	1400	0–1.0‡	1400	1400	1400	1400	1375	1325	1280	1235	1190	1145
060080***														
	††	Low Heat	880†	0–0.50	880	880	880	875	880					
		High Heat	1500†	0–1.0	1485	1495	1500	1500	1500	1500	1500	1485	1475	1465
	††	2–Ton A/C Cooling	700	0–0.50‡	670	640	635	630	630					
	††	2–1/2–Ton A/C Cooling	875	0–0.50‡	870	875	865	865	865					
		3–Ton A/C Cooling	1050	0–1.0‡	1050	1045	1040	1045	1045	1050	1050	1050	1045	1040
		3–1/2–Ton A/C Cooling	1225	0–1.0‡	1225	1225	1225	1225	1225	1225	1225	1225	1225	1225
		4–Ton A/C Cooling	1400	0–1.0‡	1330	1345	1360	1375	1380	1380	1380	1370	1365	1355
		5–Ton A/C Cooling	1750	0–1.0	1750	1750	1750	1750	1750	1750	1745	1725	1700	1685
		Maximum	2000	0–1.0	2000	2000	2000	2000	1975	1955	1920	1870	1820	1770
060100***														
	††	Low Heat	1110†	0–0.50	1105	1110	1110	1110	1110	1110	1110	1110	1110	1110
		High Heat	1525†	0–1.0	1525	1525	1525	1525	1525	1525	1525	1510	1495	1470
	††	2–Ton A/C Cooling	700	0–0.50‡	700	690	690	690	690					
	††	2–1/2–Ton A/C Cooling	875	0–0.50‡	835	845	855	860	865					
		3–Ton A/C Cooling	1050	0–1.0‡	1050	1050	1050	1050	1050	1050	1050	1050	1050	1050
		3–1/2–Ton A/C Cooling	1225	0–1.0‡	1170	1190	1205	1220	1225	1225	1225	1225	1225	1225
		4–Ton A/C Cooling	1400	0–1.0‡	1400	1400	1400	1400	1400	1400	1400	1400	1400	1375
		5–Ton A/C Cooling	1750	0–1.0	1735	1740	1735	1735	1725	1720	1710	1695	1680	1660
		Maximum	2000	0–1.0	1995	1985	1980	1965	1950	1935	1910	1885	1860	1815
060120														
		Low Heat	1330†	0–1.0	1325	1330	1330	1330	1330	1330	1330	1330	1330	1325
		High Heat	1900†	0–1.0	1900	1900	1900	1900	1900	1885	1875	1860	1840	1815
	††	2–Ton A/C Cooling	700	0–0.50‡	700	700	700	700	695					
	††	2–1/2–Ton A/C Cooling	875	0–0.50‡	870	875	875	865	870					
		3–Ton A/C Cooling	1050	0–1.0‡	1025	1035	1045	1050	1050	1050	1050	1050	1040	1025
		3–1/2–Ton A/C Cooling	1225	0–1.0‡	1210	1210	1210	1225	1225	1225	1225	1225	1225	1225
		4–Ton A/C Cooling	1400	0–1.0‡	1385	1400	1400	1400	1400	1400	1400	1395	1375	1370
		5–Ton A/C Cooling	1750	0–1.0‡	1745	1730	1735	1735	1740	1735	1730	1725	1710	1685
		6–Ton A/C Cooling	2100	0–1.0	2100	2100	2080	2065	2060	2045	2030	2000	1960	1895
		Maximum	2100	0–1.0	2100	2100	2080	2065	2060	2045	2030	2000	1960	1895

* Actual external static pressure (ESP) can be determined by using the fan laws (CFM^2 proportional to ESP); such as, a system with 1750 CFM at 0.5 ESP would operate at high–heating airflow of 1500 CFM at 0.37 ESP and low–heating airflow of 880 CFM at 0.13 ESP.

† All heating CFMs are when low–heat rise adjustment switch (SW1–3) and comfort/efficiency adjustment switch (SW1–4) are OFF.

‡ Ductwork must be sized for high–heating CFM within the operational range of ESP.

** Wattage data provided is for the circulating blower with bottom return and does not include draft inducer, accessories, or gas controls.

†† Operation within the blank areas of the chart is not recommended because high–heat operation will be above 1.0 ESP.

*** All airflows on 21 in. casing size furnaces are 5% less on side return only installations.

MAXIMUM ALLOWABLE PIPE LENGTH (FT / M)

		Direct Vent (2–Pipe Only)		NUMBER OF 90° ELBOWS					
UNIT SIZE (BTUH)	ALTITUDE	Termination Type	Pipe Dia (IN.)*	1	2	3	4	5	6
60,000	0 to 2000	2 Pipe or 2–In. Concentric	1–1/2	50 / 15.2	45 / 13.7	40 / 12.9	35 / 10.7	30 / 9.1	25 / 7.6
			2	70 / 21.3	70 / 21.3	70 / 21.3	70 / 21.3	70 / 21.3	70 / 21.3
80,000		2 Pipe or 2–In. Concentric	1–1/2	30 / 9.14	25 / 7.6	20 / 6.1	15 / 4.6	10 / 3.0	5 / 1.5
			2	70 / 21.3	70 / 21.3	70 / 21.3	70 / 21.3	70 / 21.3	70 / 21.3
100,000		2 Pipe or 2–In. Concentric	2	45 / 13.7	40 / 12.9	35 / 10.7	30 / 9.1	25 / 7.6	20 / 6.1
			2–1/2	70 / 21.3	70 / 21.3	70 / 21.3	70 / 21.3	70 / 21.3	70 / 21.3
120,000		2 Pipe or 3–In. Concentric	2–1/2 one disk	10 / 3.0	NA	NA	NA	NA	NA
			3 one disk	35 / 10.7	30 / 9.1	15 / 4.8	NA	NA	NA
			3 one disk†	70 / 21.3	70 / 21.3	70 / 21.3	70 / 21.3	70 / 21.3	70 / 21.3
UNIT SIZE (BTUH)	ALTITUDE	Termination Type	Pipe Dia (IN.)*	NUMBER OF 90° ELBOWS					
				1	2	3	4	5	6
60,000	2001 to 3000	2 Pipe or 2–In. Concentric	1–1/2	45 / 13.7	40 / 12.9	35 / 10.7	30 / 9.14	25 / 7.6	20 / 6.1
			2	70 / 21.3	70 / 21.3	70 / 21.3	70 / 21.3	70 / 21.3	70 / 21.3
80,000		2 Pipe or 2–In. Concentric	1–1/2	26 / 7.9	21 / 6.4	16 / 4.9	11 / 3.4	6 / 1.8	NA
			2	70 / 21.3	70 / 21.3	70 / 21.3	70 / 21.3	70 / 21.3	70 / 21.3
100,000		2 Pipe or 2–In. Concentric	2	40 / 12.2	35 / 10.7	30 / 9.1	25 / 7.6	20 / 6.1	15 / 4.6
			2–1/2	70 / 21.3	70 / 21.3	70 / 21.3	70 / 21.3	70 / 21.3	70 / 21.3
120,000		2 Pipe or 3–In. Concentric	3 one disk	31 / 9.4	26 / 7.9	12 / 3.7	NA	NA	NA
			3 one disk†	63 / 19.2	62 / 18.9	62 / 18.9	61 / 18.6	61 / 18.6	61 / 18.6
UNIT SIZE (BTUH)	ALTITUDE	Termination Type	Pipe Dia (IN.)*	NUMBER OF 90° ELBOWS					
				1	2	3	4	5	6
60,000	3001 to 4000	2 Pipe or 2–In. Concentric	1–1/2	42 / 12.8	37 / 11.2	32 / 9.8	27 / 8.2	22 / 6.7	17 / 5.2
			2	70 / 21.3	70 / 21.3	70 / 21.3	70 / 21.3	70 / 21.3	70 / 21.3
80,000		2 Pipe or 2–In. Concentric	1–1/2	25 / 7.6	20 / 6.1	15 / 4.6	10 / 3.0	5 / 1.5	NA
			2	70 / 21.3	70 / 21.3	70 / 21.3	70 / 21.3	70 / 21.3	70 / 21.3
100,000		2 Pipe or 2–In. Concentric	2	38 / 11.6	33 / 10.1	28 / 8.5	23 / 7.0	18 / 5.5	13 / 4.0
			2–1/2	70 / 21.3	70 / 21.3	70 / 21.3	70 / 21.3	70 / 21.3	70 / 21.3
120,000		2 Pipe or 3–In. Concentric	3 one disk	29 / 8.8	24 / 7.3	10 / 3.0	NA	NA	NA
			3 one disk†	59 / 18.0	59 / 18.0	58 / 17.8	57 / 17.4	57 / 17.4	56 / 17.0
UNIT SIZE (BTUH)	ALTITUDE	Termination Type	Pipe Dia (IN.)*	NUMBER OF 90° ELBOWS					
				1	2	3	4	5	6
60,000	4001 to 5000‡	2 Pipe or 2–In. Concentric	1–1/2	40 / 12.2	35 / 10.7	30 / 9.1	25 / 7.6	20 / 6.1	15 / 9.6
			2	70 / 21.3	70 / 21.3	70 / 21.3	70 / 21.3	70 / 21.3	70 / 21.3
80,000		2 Pipe or 2–In. Concentric	1–1/2	23 / 7.0	18 / 5.5	13 / 4.0	8 / 2.4	NA	NA
			2	70 / 21.3	70 / 21.3	70 / 21.3	70 / 21.3	70 / 21.3	68 / 20.7
100,000		2 Pipe or 2–In. Concentric	2	36 / 11.0	31 / 9.4	26 / 7.9	21 / 6.4	16 / 4.8	11 / 3.4
			2–1/2	70 / 21.3	70 / 21.3	70 / 21.3	70 / 21.3	70 / 21.3	70 / 21.3
120,000		2 Pipe or 3–In. Concentric	3 one disk†	56 / 17.1	55 / 16.8	54 / 16.5	53 / 6.2	52 / 15.8	52 / 15.8
UNIT SIZE (BTUH)	ALTITUDE	Termination Type	Pipe Dia (IN.)*	NUMBER OF 90° ELBOWS					
				1	2	3	4	5	6
60,000	5001 to 6000‡	2 Pipe or 2–In. Concentric	1–1/2	37 / 11.3	32 / 9.8	27 / 8.2	22 / 6.7	17 / 5.2	12 / 3.7
			2	70 / 21.3	70 / 21.3	70 / 21.3	70 / 21.3	70 / 21.3	70 / 21.3
80,000		2 Pipe or 2–In. Concentric	1–1/2	22 / 6.7	17 / 5.2	12 / 3.7	7 / 2.1	NA	NA
			2	70 / 21.3	70 / 21.3	70 / 21.3	70 / 21.3	68 / 20.7	63 / 19.2
100,000		2 Pipe or 2–In. Concentric	2	33 / 10	28 / 8.5	23 / 7.0	18 / 5.5	13 / 4.0	8 / 2.4
			2–1/2	70 / 21.3	70 / 21.3	70 / 21.3	70 / 21.3	70 / 21.3	70 / 21.3
120,000		2 Pipe or 3–In. Concentric	3 one disk†	53 / 16.2	52 / 15.8	50 / 15.2	49 / 14.9	48 / 14.6	47 / 14.3

*See notes on next page.

MAXIMUM ALLOWABLE PIPE LENGTH (FT / M) (CONTINUED)

ALTITUDE	UNIT SIZE (BTUH)	Direct Vent (2-Pipe Only)		NUMBER OF 90° ELBOWS					
		Termination Type	Pipe Dia (IN.)*	1	2	3	4	5	6
6001 to 7000‡	60,000	2 Pipe or 2–In. Concentric	1–1/2	35 / 10.7	30 / 9.1	25 / 7.6	20 / 6.1	15 / 4.6	10 / 3.0
			2	70 / 21.3	70 / 21.3	68 / 20.7	67 / 20.4	66 / 20.11	64 / 19.5
	80,000	2 Pipe or 2–In. Concentric	1–1/2	20 / 6.1	15 / 4.6	10 / 3.0	5 / 1.5	NA	NA
			2	70 / 21.3	70 / 21.3	68 / 20.7	67 / 20.4	62 / 18.9	57 / 17.4
	100,000	2 Pipe or 2–In. Concentric	2	31 / 9.4	26 / 7.9	21 / 6.4	16 / 4.9	11 / 3.4	6 / 1.8
			2–1/2	70 / 21.3	70 / 21.3	68 / 20.7	67 / 20.4	66 / 20.1	64 / 19.5
	120,000	2 Pipe or 3–In. Concentric	3 one disk†	49 / 14.9	48 / 14.6	47 / 14.3	45 / 13.7	44 / 13.4	43 / 13.1
ALTITUDE	UNIT SIZE (BTUH)	Termination Type	Pipe Dia (IN.)*	NUMBER OF 90° ELBOWS					
				1	2	3	4	5	6
7001 to 8000‡	60,000	2 Pipe or 2–In. Concentric	1–1/2	32 / 9.8	27 / 8.2	22 / 6.7	17 / 5.2	12 / 3.7	7 / 2.1
			2	66 /20.1	65 / 19.8	63 / 19.2	62 / 18.9	60 / 18.3	59 / 18.0
	80,000	2 Pipe or 2–In. Concentric	1–1/2	18 / 5.5	13 / 4.0	8 / 2.4	NA	NA	NA
			2	66 / 20.1	65 / 19.8	63 / 19.2	62 / 18.9	57 / 17.4	52 / 15.8
	100,000	2 Pipe or 2–In. Concentric	2	29 / 8.8	24 / 7.3	19 / 5.8	14 / 4.3	9 / 2.7	NA
			2–1/2	66 / 20.1	65 / 19.8	63 / 19.2	62 / 18.9	60 / 18.3	59 / 18
	120,000	2 Pipe or 3–In. Concentric	3 one disk†	46 / 14.0	44 / 13.4	43 / 13.1	41 / 12.5	40 / 12.2	38 / 11.6
ALTITUDE	UNIT SIZE (BTUH)	Termination Type	Pipe Dia (IN.)*	NUMBER OF 90° ELBOWS					
				1	2	3	4	5	6
8001 to 9000‡	60,000	2 Pipe or 2–In. Concentric	1–1/2	30 / 9.1	25 / 7.6	20 / 6.1	15 / 4.6	10 / 3.0	5 / 1.5
			2	62 / 18.9	60 / 17.8	58 / 17.7	56 / 17.1	55 / 16.8	53 / 16.2
	80,000	2 Pipe or 2–In. Concentric	1–1/2	17 / 5.2	12 / 3.1	7 / 2.1	NA	NA	NA
			2	62 / 18.9	60 / 18.3	58 / 17.7	56 / 17.1	51 / 15.5	46 / 14.0
	100,000	2 Pipe or 2–In. Concentric	2	27 / 8.2	22 / 6.7	17 / 5.2	12 / 3.7	7 / 2.1	NA
			2–1/2	62 / 18.9	60 / 18.3	58 / 17.7	56 / 17.1	55 / 16.8	53 / 16.2
	120,000	2 Pipe or 3–In. Concentric	3 one disk†	43 / 13.1	41 / 12.5	39 /11.9	37 / 11.3	35 / 10.7	34 / 10.4
ALTITUDE	UNIT SIZE (BTUH)	Termination Type	Pipe Dia (IN.)*	NUMBER OF 90° ELBOWS					
				1	2	3	4	5	6
9001 to 10000‡	60,000	2 Pipe or 2–In. Concentric	1–1/2	27 / 8.2	22 / 6.7	17 / 5.2	12 / 3.7	7 / 2.1	NA
			2	57 / 17.4	55 / 16.8	53 / 16.2	51 / 15.5	49 / 14.9	47 / 14.3
	80,000	2 Pipe or 2–In. Concentric	1–1/2	15 / 4.6	10 / 3.0	5 / 1.5	NA	NA	NA
			2	57 / 17.4	55 / 16.8	53 / 16.2	51 / 15.5	46 / 14.0	41 / 12.5
	100,000	2 Pipe or 2–In. Concentric	2	24 / 7.3	19 / 5.8	14 / 4.3	9 / 2.7	NA	NA
			2–1/2	57 / 17.4	55 / 16.8	53 / 16.2	51 / 15.5	49 / 14.9	47 / 14.3
	120,000	2 Pipe or 3–In. Concentric	3 one disk†	39 / 11.9	37 / 11.3	35 / 10.7	33 / 10.1	31 / 9.5	29 / 8.8

* Disk usage–Unless otherwise stated, use perforated disk assembly (factory–supplied in loose parts bag).
† Wide radius elbow.
‡ Vent sizing for Canadian installations over 4500 ft (1370m) above sea level are subject to acceptance by the local authorities having jurisdiction.
NA–Not Allowed; pressure switch will not make.

NOTES:
1. Do not use pipe size greater than those specified in table or incomplete combustion, flame disturbance, or flame sense lockout may occur.
2. Size both the combustion–air and vent pipe independently, determine the smallest diameter allowed by the table for each pipe, then use the larger diameter for both pipes.
3. Assume two 45° elbows equal one 90° elbow. Long radius elbows are desirable and may be required in some cases.
4. Elbows and pipe sections within the furnace casing and at the vent termination should not be included in vent length or elbow count.
5. The minimum pipe length is 5 ft for all applications.

MAXIMUM ALLOWABLE EXPOSED VENT PIPE LENGTH (FT / M) WITH INSULATION IN WINTER DESIGN TEMPERATURE AMBIENT*

UNIT SIZE	WINTER DESIGN TEMPERATURE	MAXIMUM PIPE DIAMETER (IN.)	INSULATION THICKNESS†				
			0	3/8	1/2	3/4	1
042060	20°F / –6.7°C	2	30 / 9.1	55 / 16.8	61 / 18.6	70 / 21.3	70 / 21.3
	0°F / –17.8°C	2	16 / 4.9	33 / 10.1	38 / 11.6	46 / 14.0	53 / 16.2
	–20°F / –28.9°C	2	9 / 2.7	23 / 7.0	26 / 7.9	33 / 10.1	38 / 11.6
042080 060080	20°F / –6.7°C	2	37 / 11.2	65 / 19.8	70 / 21.4	70 / 21.3	70 / 21.3
	0°F / –17.8°C	2	20 / 6.1	39 / 11.9	45 / 13.7	55 / 16.8	63 / 19.2
	–20°F / –28.9°C	2	11 / 3.4	27 / 8.3	31 / 9.4	39 / 11.9	45 / 13.7
060100	20°F / –6.7°C	2–1/2	41 / 12.5	70 / 21.3	70 / 21.3	70 / 21.3	70 / 21.3
	0°F / –17.8°C	2–1/2	21 / 6.4	42 / 12.8	48 / 14.6	59 / 18.0	68 / 20.7
	–20°F / –28.9°C	2–1/2	11 / 3.4	28 / 8.5	33 / 10.1	41 / 12.5	49 / 14.9
060120	20°F / –6.7°C	3	49 / 14.9	70 / 21.3	70 / 21.3	70 / 21.3	70 / 21.3
	0°F / –17.8°C	3	26 / 7.9	51 / 15.5	58 / 17.7	70 / 21.3	70 /21.3
	–20°F / –28.9°C	3	15 / 4.6	35 / 10.7	40 / 12.2	50 / 15.2	59 / 18.0

* Pipe length (ft/m) specified for maximum pipe lengths located in unconditioned spaces. Pipes located in unconditioned space cannot exceed total allowable pipe length as specified in Table.

†Insulation thickness based on R value of 3.5 per in.

CONCENTRIC VENT (DIRECT VENT/2-PIPE ONLY) (ALL MODEL SIZES)

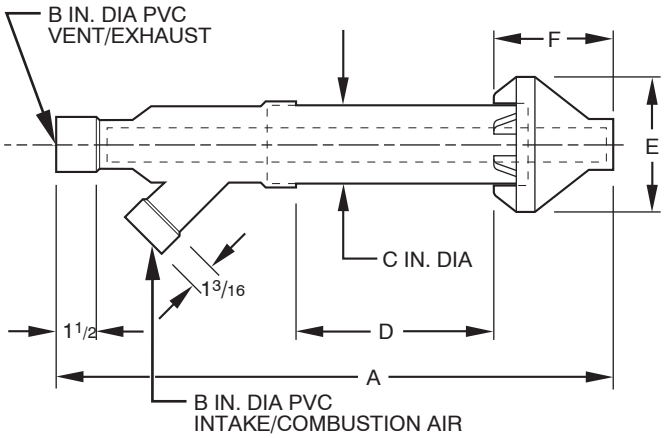

A97110

Dimensions (in.)

KIT PART NO.	A*	B	C	D†	E	F
KGAVT0701CVT	33–3/8	2	3–1/2	16–5/8	6–1/4	5–3/4
KGAVT0801CVT	38–7/8	3	4–1/2	21–1/8	7–3/8	6–1/2

* Dimension A will change proportionally as dimension D is lengthened or shortened.

† Dimension D may be lengthened to 60 in. maximum. Dimension D may also be shortened by cutting the pipes provided in the kit to 12 in. minimum.

CONDENSATE TRAP

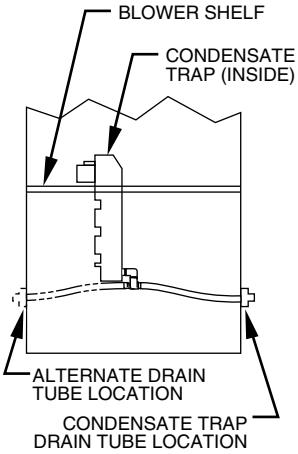

UPFLOW APPLICATIONS

A06519

TYPICAL WIRING SCHEMATIC

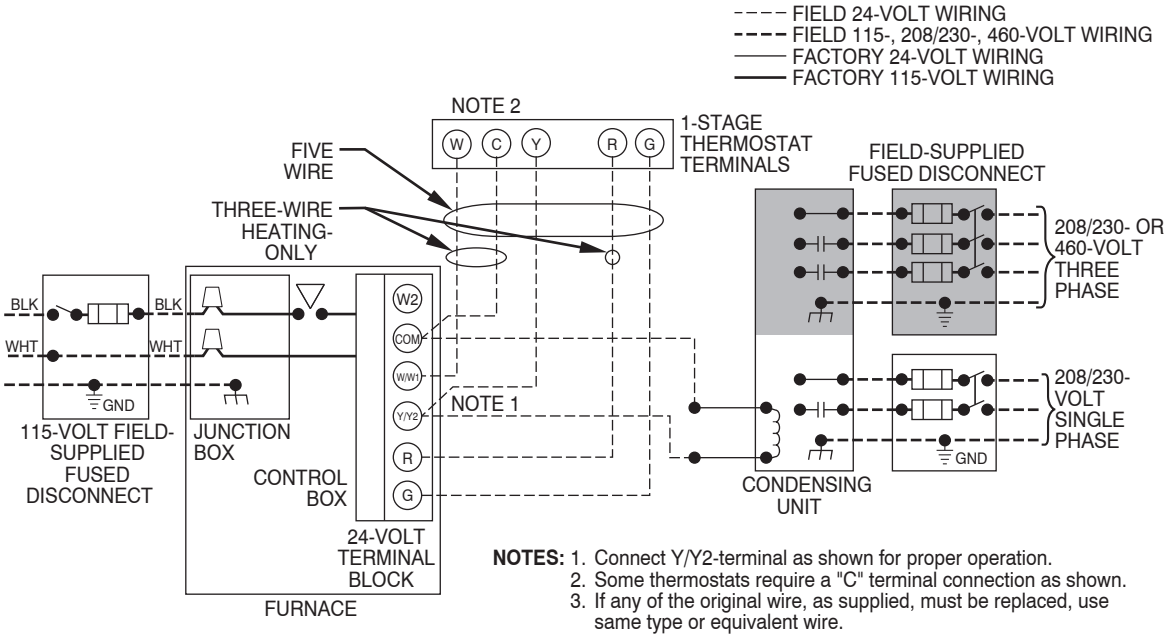

A95236

CLEARANCE TO COMBUSTIBLES

INSTALLATION

- This forced air furnace is equipped for use with natural gas at altitudes 0 - 10,000 ft (0 - 3,050m), except 140 size furnaces are only approved for altitudes 0 - 7,000 ft. (0 - 2,135m).
- An accessory kit, supplied by the manufacturer, shall be used to convert to propane gas use or may be required for some natural gas applications.
- This furnace is for indoor installation in a building constructed on site. This furnace may be installed in a manufactured (mobile) home when stated on rating plate and using factory authorized kit..
- This furnace may be installed on combustible flooring in alcove or closet at **Minimum Inches Clearance To Combustible Construction** as described below.
- This furnace requires a special venting system. Refer to the installation instructions for parts list and method of installation. This furnace is for use with schedule-40 PVC, PVC-DWV, CPVC, or ABS-DWV pipe, and must not be vented in common with other gas-fired appliances. Construction through which vent/air intake pipes may be installed is maximum 24 inches (610 mm), minimum 3/4 inches (19 mm) thickness (including roofing materials).

- Cette fournaise à air pulsé est équipée pour utilisation avec gaz naturel et altitudes comprises entre 0 - 3,050m (0 - 10,000 pi),excepté queles fournaises de 140 taille sont pour altitudes comprises entre 0 - 2,135m (0 - 7,000pi).
- Utiliser une trousse de conversion, fournie par le fabricant, pour passer au gaz propane ou pour certaines installations au gaz naturel.
- Cette fournaise à air pulsé est pour installation à l´intérieur dans un bâtiment construit sur place. Cette fournaise à air pulse peut être installée dans une maison préfabriquée (maison mobile) si prescrit par la plaque signalétique et si'l on utilise une trousse specifiée par le fabricant.
- Cette fournaise peut être installée sur un plancher combustible dans un enfoncement ou un placard en observant les **Dégagement Minimum En Pouces Avec. Éléments De Construction Combustibles.**
- Cette fournaise nécessite un système d´évacuation spécial. La méthode d´installation et la liste des pièces nécessaires figurent dans les instructions d´installation. Cette fournaise doit s´utiliser avec la tuyauterie des nomenclatures 40 PVC, PVC-DWV, CPVC, ou ABS-DWV et elle ne peut pas être ventilée conjointment avec d´autres appareils à gaz. Épaisseur de la construction au travers de laquelle il est possible de faire passer les tuyaux d'aération (admission/évacuation): 24 po (610 mm) maximum, 3/4 po (19mm) minimum (y compris la toiture).

MINIMUM INCHES CLEARANCE TO COMBUSTIBLE CONSTRUCTION

* Minimum front clearance for service 24 inches (610mm).

DÉGAGEMENT MINIMUM EN POUCES AVEC ÉLÉMENTS DE CONSTRUCTION COMBUSTIBLES

* Dégagement avant minimum de 24 po (610mm) pour l'entretien.

Furnace must be installed level, or pitched within 1/2" of level.

La fournaise doit être installée de niveau ou inclinée à pas plus de 1/2" du niveau.

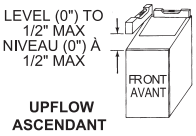

This furnace is approved for UPFLOW installations only.

Cette fournaise est approuvée pour l´installation et la circulation d´air VERS LE HAUT.

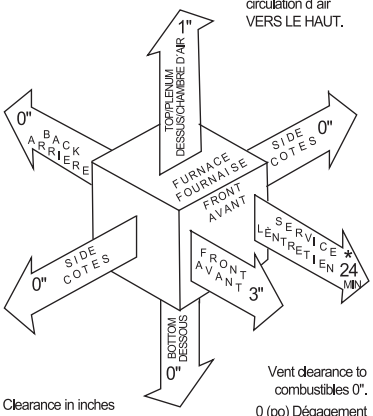

Clearance in inches
Dégagement (po).

Vent clearance to combustibles 0".
0 (po) Dégagement d´évent avec combustibles.

332713 -201 REV. B (LIT.TOP)

A09681

355BAV

TYPICAL INSTALLATIONS

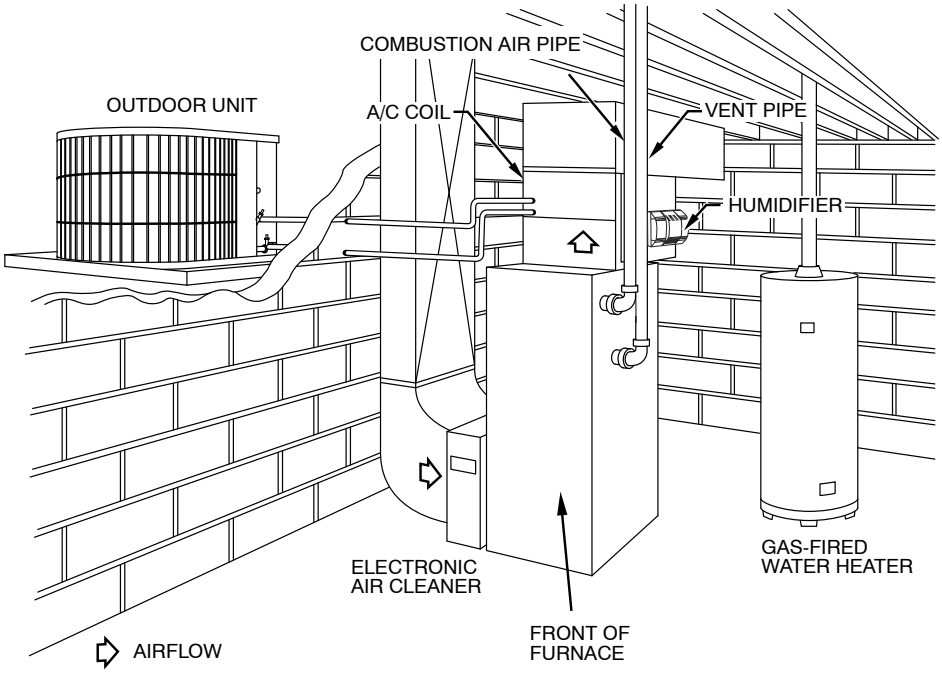

A06511

355BAV

General

System Description

Furnish a _____ (upflow) gas-fired condensing furnace for use with natural gas or propane (factory-authorized conversion kit required for propane); furnish cold air return plenum; furnish external media cabinet for use with accessory media filter or standard filter.

Quality Assurance

Unit will be designed, tested and constructed to the current ANSI Z 21.47/CSA 2.3 design standard for gas-fired central furnaces.

Unit will be third party certified by CSA to the current ANSI Z 21.47/CSA 2.3 design standard for gas-fired central furnaces. Unit will carry the CSA Blue Star® and Blue Flame® labels. Unit efficiency testing will be performed per the current DOE test procedure as listed in the Federal Register.

Unit will be certified for capacity and efficiency and listed in the latest GAMA Consumer's Directory of Certified Efficiency Ratings.

Unit will carry the current Federal Trade Commission Energy Guide efficiency label.

Delivery, Storage, and Handling

Unit will be shipped as single package only and is stored and handled per unit manufacturer's recommendations.

Warranty (for inclusion by specifying engineer)

U.S. and Canada only. Warranty certificate available upon request.

Equipment

Blower Wheel and ECM Blower Motor

Galvanized blower wheel shall be centrifugal type, statically and dynamically balanced. Blower motor of ECM type shall be permanently lubricated with sealed ball bearings, of _____hp, and have infinitely variable speed from 300-1300 RPM operating only when 24-VAC motor inputs are provided. Blower motor shall be direct drive and soft mounted to the blower scroll to reduce vibration transmission.

Filters

Furnace shall have reusable-type filters. Filter shall be _____ in. (X) _____ in. An accessory highly efficient Media Filter is available as an option. _____ Media Filter.

Casing

Casing shall be of .030 in. thickness minimum, pre-painted galvanized steel.

ECM Inducer Motor

ECM Inducer motor shall be variable speed design, soft mounted to assembly to reduce vibration transmission.

Primary Heat Exchangers

Primary heat exchangers shall be 3-Pass 20 gauge corrosion-resistant aluminized steel of fold-and-crimp sectional design and applied operating under negative pressure.

Secondary Heat Exchangers

Secondary heat exchangers shall be of a flow-through design having a patented interior laminate coating of polypropylene for greater corrosion resistance with fold-and-crimp design and applied operating under negative pressure.

Controls

Controls shall include a micro-processor-based integrated electronic control board with at least 16 service troubleshooting codes displayed via diagnostic flashing LED light on the control, a self-test feature that checks all major functions of the furnace, and a replaceable automotive-type circuit protection fuse. Multiple operational settings available, including separate blower speeds for low heat, high heat, low cooling, high cooling and continuous fan. Continuous fan speed may be adjusted from the thermostat. Cooling airflow will be selectable between 350 or 400 CFM per ton of air conditioning. Features will also include temporary reduced airflow in the cooling mode for improved dehumidification when a Thermidistat is selected as the thermostat.

Operating Characteristics

Heating capacity shall be _____ Btuh input; _____ Btuh output capacity.

Fuel Gas Efficiency shall be 95% AFUE.

Air delivery shall be _____ cfm minimum at 0.50 in. wc. external static pressure.

Dimensions shall be: depth_____in.; width _____in.; height_____in. (casing only). Height shall be _____in. with A/C coil and _____in. overall with plenum.

Electrical Requirements

Electrical supply shall be 115 volts, 60 Hz, single-phase (nominal). Minimum wire size shall be _____AWG; maximum fuse size of HACR-type designated circuit breaker shall be _____ amps.

Special Features

Refer to section of the product data identifying accessories and descriptions for specific features and available enhancements.

©Bryant Heating & Cooling Systems 7310 W. Morris St. Indianapolis, IN 46231 Printed in U.S.A. Edition Date: 09/10

Catalog No. PDS355B.40.2

Manufacturer reserves the right to discontinue, or change at any time, specifications or designs without notice and without incurring obligations.

Replaces: PDS355B.40.1