538KR / 619FB / 619KB / 619KC / 619KD / 619KF
MULTI- ZONE DUCTLESS SPLIT SYSTEM
SIZE 18K, 24K, 30K, 36K, 42K, 48K AND 56K

Product Data

INDUSTRY LEADING FEATURES / BENEFITS

AN INEXPENSIVE AND CREATIVE SOLUTION TO DESIGN PROBLEMS.

The 538KR / 619FB / 619KB / 619KC / 619KD / 619KF ductless inverter driven multi-split system provides individual comfort control for up to 9 separate zones. Two, three, four, five, six, seven, eight or nine space-saving cassette, floor console, high wall, or ducted fan coils can be matched with one outdoor heat pump. The indoor fan coils are connected to the outdoor unit by refrigerant tubing and wires.

The different styles of indoor units can be mounted in several locations to accommodate the application. This selection of fan coils permits inexpensive and creative solutions to design problems such as:

- When adding air conditioning to spaces that are heated by hydronic or electric heat and have no ductwork.
- Historical renovations or any application where preserving the look of the original structure is essential.
- Commercial add-on jobs where the existing air conditioning system cannot be stretched.

These compact indoor fan coil units take up very little space in the room and do not obstruct windows. The fan coils are attractively styled to blend with most room decors.

Advanced system components incorporate innovative technology to provide reliable cooling and heating performance at low sound levels.

INVERTER TECHNOLOGY

The inverter driven compressor is designed to run at various input power frequencies (Hz) which controls the motor speed of the compressor.

Even Temperature – The control package, including the inverter, monitors outdoor and indoor temperatures as they relate to the selected indoor set point and adjusts the speed of the compressor to match the load and keep the system operating continuously rather than cycling and creating temperature swings. This translates to higher comfort levels for the occupants.

Rapid Pull Down/Warm-Up – Comfort is increased by the ability to the inverter system to ramp up the compressor speed enabling the system to reach the user selected room temperature set point quicker.

Humidity Control – Running the system for longer periods and continuously varying the compressor speed enhances the humidity control.

INDIVIDUAL ROOM COMFORT

Maximum comfort is provided because each space can be controlled individually based on the usage pattern. The air sweep feature provided permits optimal room mixing to eliminate hot and cold spots for the occupant comfort.

LOW SOUND LEVELS

When noise is a concern, ductless split systems are the answer. The indoor units are whisper quiet. There are no compressors indoors, either in the conditioned space or directly over it, and there is none of the noise usually generated by air being forced through ductwork.

When sound ordinances and proximity to neighbors demand quiet operation, the 538KR unit is the right choice. With the inverter technology, these units run at lower speeds most of the time resulting in reduced sound levels.

INVERTER TECHNOLOGY – ENHANCED ECONOMICAL OPERATION

Ductless systems are inherently economical to operate. Individual rooms are heated or cooled only when required, and since the air is delivered directly to the space, there is no need to use additional energy to move the air in the ductwork. This economical operation is enhanced further when the inverter system output matches the load resulting in a more efficient system.

EASY-TO-USE CONTROLS

The multi-zone systems have microprocessor-based controls to provide the ultimate in comfort and efficiency. The user friendly wired and wireless remote controls provide the interface between the user and the unit.

SECURE OPERATION

If security is an issue, outdoor and indoor units are connected only by refrigerant piping and wiring to prevent intruders from crawling through ductwork or wall openings. In addition, since the 538KR can be installed close to an outside wall, coils are protected from vandals and severe weather.

FAST INSTALLATION

This compact ductless split system is simple to install. A mounting bracket is included with the indoor units and only wires and piping need to be run between the indoor and outdoor units. These units are fast and easy to install ensuring minimal disruption to customers in homes or workplace. This makes the 538KR / 619FB / 619KB / 619KC / 619KD / 619KF systems the equipment of choice for retrofit applications.

SIMPLE SERVICING AND MAINTENANCE

Removing the top panel of the outdoor unit provides immediate access to the control compartment, providing the service technician access to the diagnostic LEDs to facilitate the troubleshooting process. In addition, the draw-thru design of the outdoor unit means that dirt accumulates on the outside surface of the coil. Coils can be cleaned quickly from the inside using a pressure hose and detergent.

On the indoor units, service and maintenance expense is reduced due to the permanent easy to clean filters. Also, error codes are displayed on the front panel to alert the user to certain system malfunctions

BUILT-IN RELIABILITY

Ductless split system indoor and outdoor units are designed to provide years of trouble-free operation.

Both the indoor and outdoor units are well protected. Whenever the microprocessor detects abnormal conditions, the unit will stop and an error code is displayed.

Inverter systems provide additional reliability due to soft start. This refers to the ability of the inverter to start the compressor motor using reduced voltage and reduced current. This feature is beneficial from an electrical standpoint (eliminates current spikes) as well as an overall reliability standpoint due to reduced stress on all associated system components.

CONDENSATE PUMP

A condensate pump accessory is available (High Wall and Floor Console) to provide installation flexibility for those applications where gravity cannot be used to dispose of the condensate.
Factory installed condensate pump on the Ducted and Cassette fan coils provides installation flexibility.

AGENCY LISTINGS

All systems are listed with AHRI (Air conditioning, Heating, and Refrigeration Institute) and are ETL certified per UL 1995 standard.

MODEL NUMBER NOMENCLATURE

INDOOR UNIT

619 F E Q 009 B B GA

619 = FAN COIL UNIT

F/K = MODEL

VOLTAGE
E = 208–230/1/60

SYSTEM TYPE
Q = HEAT PUMP

NOMINAL CAPACITY
009 – 3/4TON
012 – 1TON
018 – 1–1/2TONS
021 – 1–3/4TONS
024 – 2TONS

GA = ALL MODELS

MAXIMUM NUMBER OF FAN COIL UNITS THAT CAN BE CONNECTED TO THE OUTDOOR UNIT
B=1:1

INDOOR FAN COIL TYPE
B = HIGH WALL (GRAY COLOR)
H = HIGH WALL (WHITE COLOR)
C = CASSETTE
D = DUCTED
F = FLOOR CONSOLE

OUTDOOR UNIT

538 K E Q 018 R C GA

538 = OUTDOOR UNIT

K = MODEL

VOLTAGE
E = 208–230/1/60

SYSTEM TYPE
Q = HEAT PUMP

NOMINAL CAPACITY
018 – 1–1/2TONS
024 – 2TONS
030 – 2–1/2TONS
036 – 3TONS
042 – 3–1/2TONS
048 – 4TONS
056 – 4 3/4TONS

GA = ALL MODELS

MAXIMUM NUMBER OF FAN COIL UNITS THAT CAN BE CONNECTED TO THE OUTDOOR UNIT
C = 1:2
D = 1:3
F = 1:4 or 1:5
G =1:6
K = 1:8
L = 1:9

UNIT TYPE
R = OUTDOOR UNIT

Use of the AHRI Certified TM Mark indicates a manufacturer's participation in the program For verification of certification for individual products, go to www.ahridirectory.org.

STANDARD FEATURES AND ACCESSORIES

Ease of Installation	
Mounting Bracket	S
Low Voltage Controls	S
Comfort Features	
Microprocessor Control	S
Wired Remote Control for High Walls, Cassette and Floor Console	A
Wired Remote Control for Ducted	S
Wireless Remote Control	S
Rapid Cooling and Heating	S
Automatic Air Sweep	S
Cold Blow Prevention	S
Continuous Fan	S
Auto Restart Function	S
Auto Changeover	S
Follow Me	S
Energy Saving Features	
Inverter Driven Compressor	S
Sleep Mode	S
24 Hour Stop/Start Timer	S
46° F Heating Mode (Heating Setback)	S
Safety And Reliability	
Indoor Coil Freeze Protection	S
3 Minute Time Delay For Compressor	S
High Compressor Discharge Temperature	S
Low Voltage Protection	S
Compressor Overload Protection	S
Compressor Over Current Protection	S
IPM Module Protection	S
Ease of Service	
Cleanable Filters	S
Diagnostic	S
Error Messages Displayed On Front Panel	S
Application Flexibility	
Condensate Pumps For High Walls and Floor Console	A
Condensate Pump For Cassette and Ducted	S
Crankcase Heater	S

Legend
S Standard
A Accessory

INDOOR UNITS

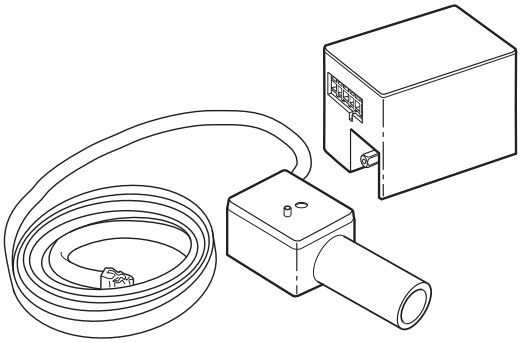

Fig. 1 – Condensate Pump Accessory

On high wall and floor console fan coils, the condensate pump accessory is recommended when adequate drain line pitch cannot be provided, or when the condensate must move up to exit.

The pump has a lift capability of 12 ft. (3.6 m) on the discharge side if the pump is mounted in the fan coil or 6 ft. (1.8 m) on the suction side if the pump is remote mounted.

OUTDOOR UNITS

CRANKCASE HEATER
Standard on all unit sizes. Heater clamps around compressor oil stump.

COMBINATION TABLE

Indoor Unit	Nominal Unit Btuh	Indoor Model Number	Outdoor Model Number
High Wall	9,000	619FEQ009BBGA	538KEQ018RCGA 538KEQ024RDGA
	12,000	619FEQ012BBGA	
	18,000	619FEQ018BBGA	
	9,000	619FEQ009HBGA	
	12,000	619FEQ012HBGA	
	18,000	619FEQ018HBGA	
High Wall	9,000	619KEQ009BBGA	
	12,000	619KEQ012BBGA	
	18,000	619KEQ018BBGA	
Cassette	12,000	619KEQ012CBGA	
	18,000	619KEQ018CBGA	
Ducted	9,000	619KEQ009DBGA	
	12,000	619KEQ012DBGA	
	18,000	619KEQ018DBGA	
Floor Console	9,000	619KEQ009FBGA	
	12,000	619KEQ012FBGA	
	18,000	619KEQ018FBGA	

Indoor Unit	Nominal Unit Btuh	Indoor Model Number	Outdoor Model Number
High Wall	9,000	619FEQ009BBGA	538KEQ030RFGA 538KEQ036RGGA 538KEQ042RGGA
	12,000	619FEQ012BBGA	
	18,000	619FEQ018BBGA	
	9,000	619FEQ009HBGA	
	12,000	619FEQ012HBGA	
	18,000	619FEQ018HBGA	
High Wall	9,000	619KEQ009BBGA	
	12,000	619KEQ012BBGA	
	18,000	619KEQ018BBGA	
	24,000	619KEQ024BBGA	
Cassette	12,000	619KEQ012CBGA	
	18,000	619KEQ018CBGA	
	24,000	619KEQ024CBGA	
Ducted	9,000	619KEQ009DBGA	
	12,000	619KEQ012DBGA	
	18,000	619KEQ018DBGA	
	21,000	619KEQ021DBGA	
	24,000	619KEQ024DBGA	
Floor Console	9,000	619KEQ009FBGA	
	12,000	619KEQ012FBGA	
	18,000	619KEQ018FBGA	

Indoor Unit	Nominal Unit Btuh	Indoor Model Number	Outdoor Model Number
High Wall	9,000	619FEQ009BBGA	538KEQ048RKGA 538KEQ056RLGA
	12,000	619FEQ012BBGA	
	18,000	619FEQ018BBGA	
	9,000	619FEQ009HBGA	
	12,000	619FEQ012HBGA	
	18,000	619FEQ018HBGA	
High Wall	9,000	619KEQ009BBGA	
	12,000	619KEQ012BBGA	
	18,000	619KEQ018BBGA	
	24,000	619KEQ024BBGA	
Cassette	12,000	619KEQ012CBGA	
	18,000	619KEQ018CBGA	
	24,000	619KEQ024CBGA	
Ducted	9,000	619KEQ009DBGA	
	12,000	619KEQ012DBGA	
	18,000	619KEQ018DBGA	
	21,000	619KEQ021DBGA	
	24,000	619KEQ024DBGA	
Floor Console	9,000	619KEQ009FBGA	
	12,000	619KEQ012FBGA	
	18,000	619KEQ018FBGA	

DIMENSIONS - INDOOR

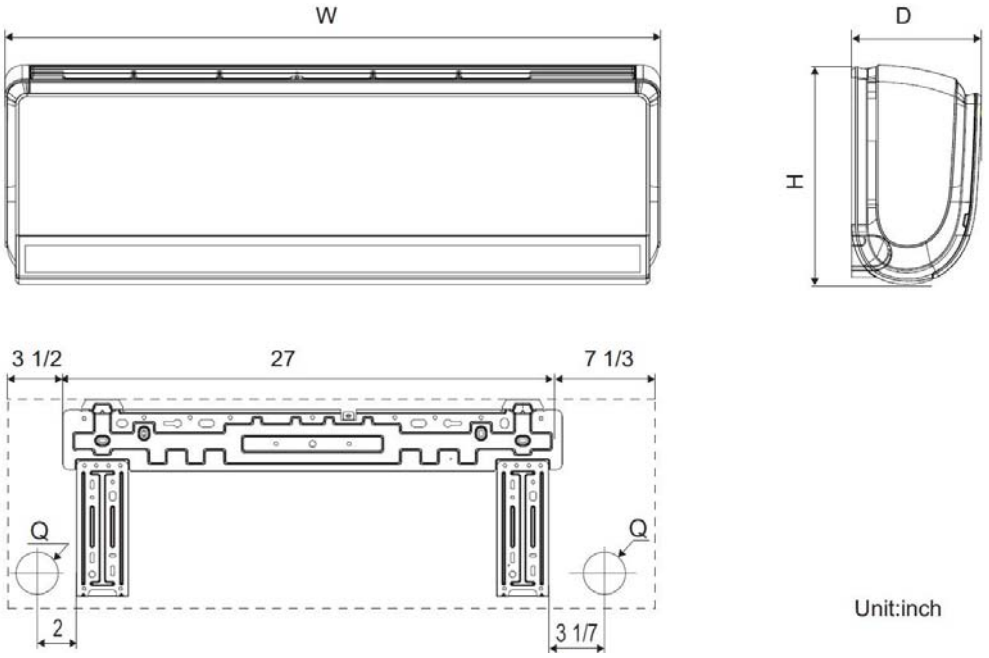

Fig. 2 – F High Wall Dimensions

Unit Size	W In. (mm)	D In. (mm)	H In. (mm)	Q In. (mm)	Operating Weight Lbs. (kg)
9k	37.8 (960)	8.07 (205)	12.6 (320)	2.16 (55)	33.07 (15)
12k	37.8 (960)	8.07 (205)	12.6 (320)	2.16 (55)	33.07 (15)
18k	37.8 (960)	8.07 (205)	12.6 (320)	2.75 (70)	33.07 (15)

DIMENSIONS - INDOOR (CONTINUED)

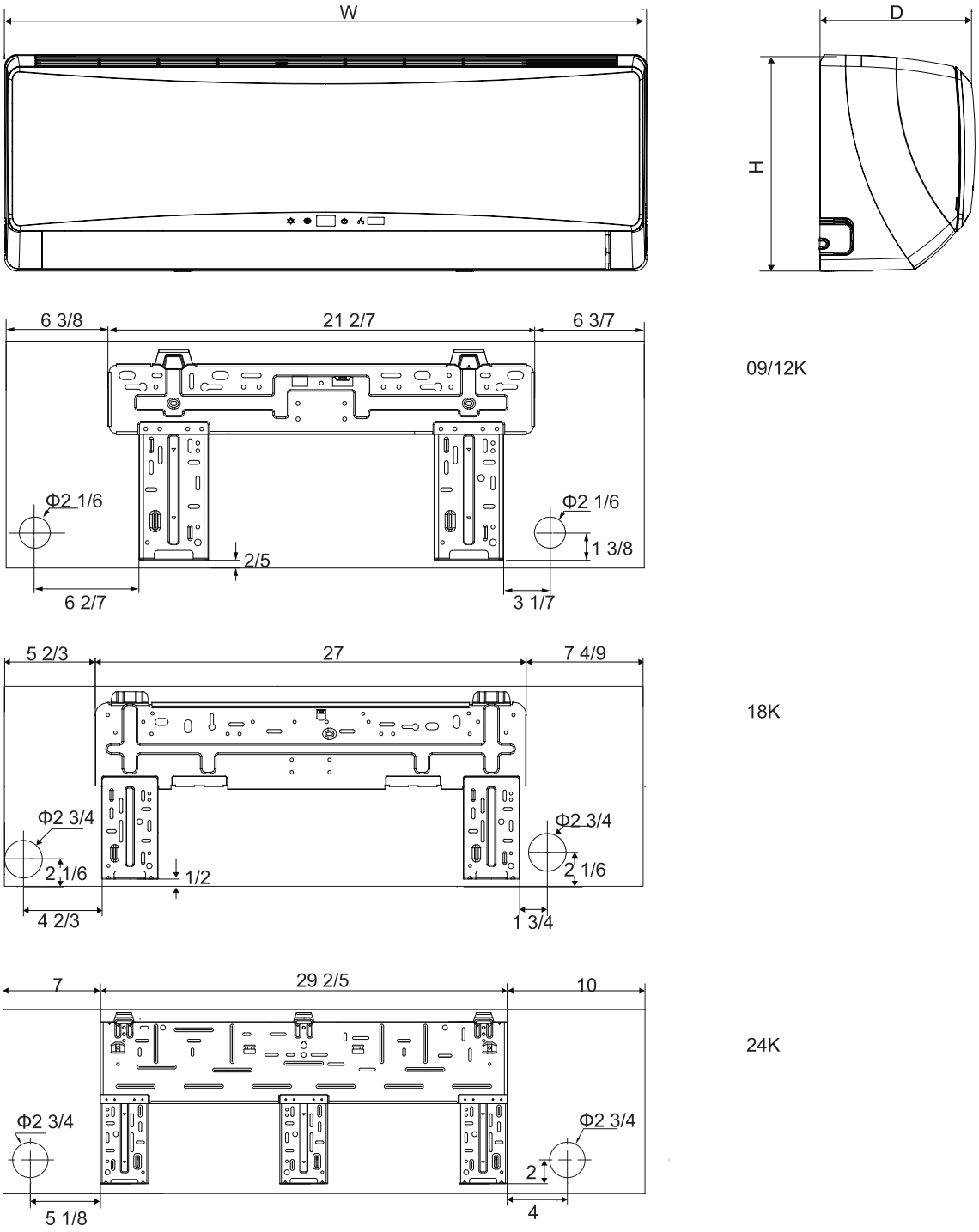

Fig. 3 – K*B High Wall Dimensions

40K*B High Wall				
Unit Size	**W In. (mm)**	**D In (mm)**	**H In. (mm)**	**Operating Weight**
9k	34.09	8.23	11.5	24.3
12k	34.09	8.23	11.5	24.3
18k	40.079	9.055	12.6	30.9
24	46.378	10.394	12.8	38.6

DIMENSIONS - INDOOR (CONTINUED)

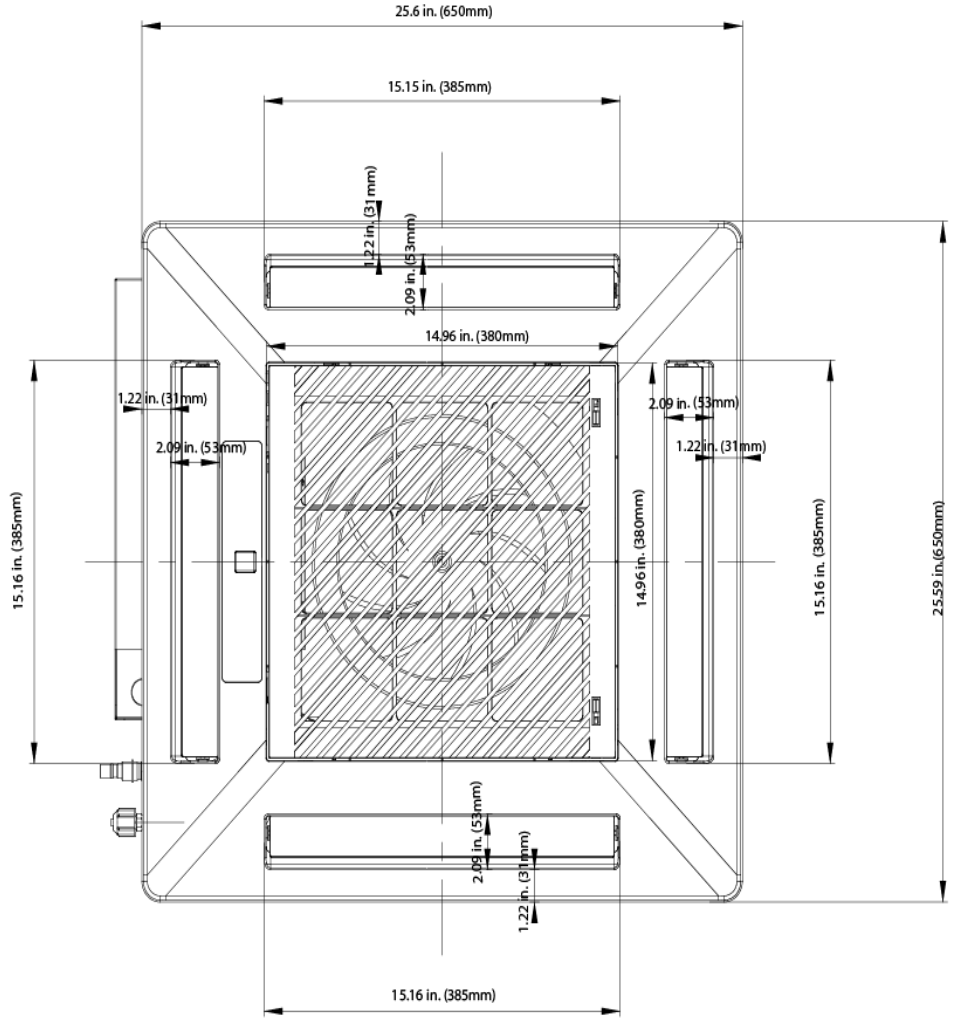

Fig. 4 – Cassette Grill Dimensions

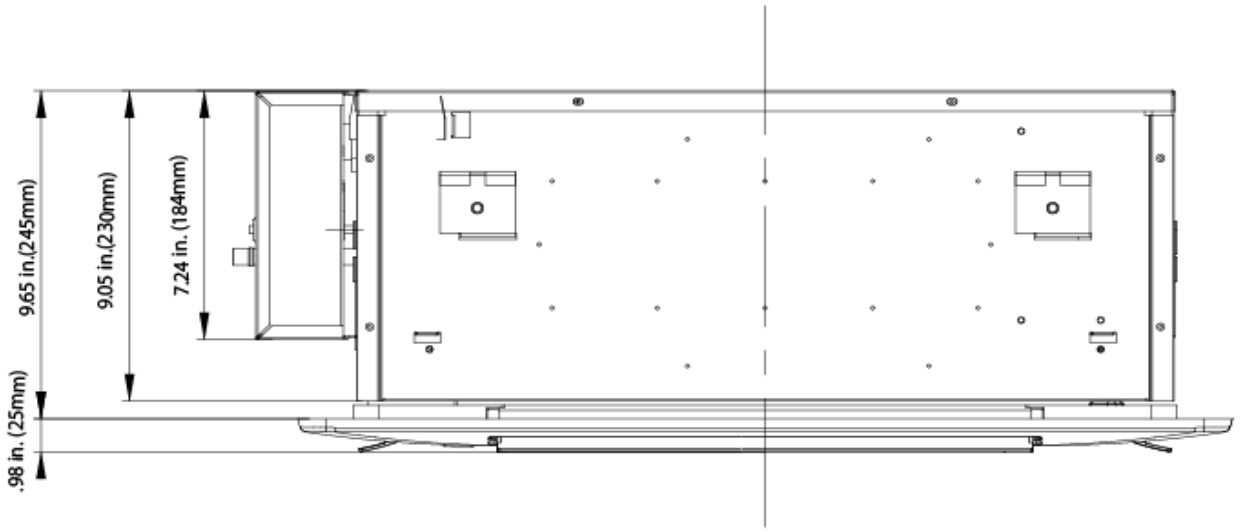

Fig. 5 – Cassette Side View Dimensions

DIMENSIONS - INDOOR (CONTINUED)

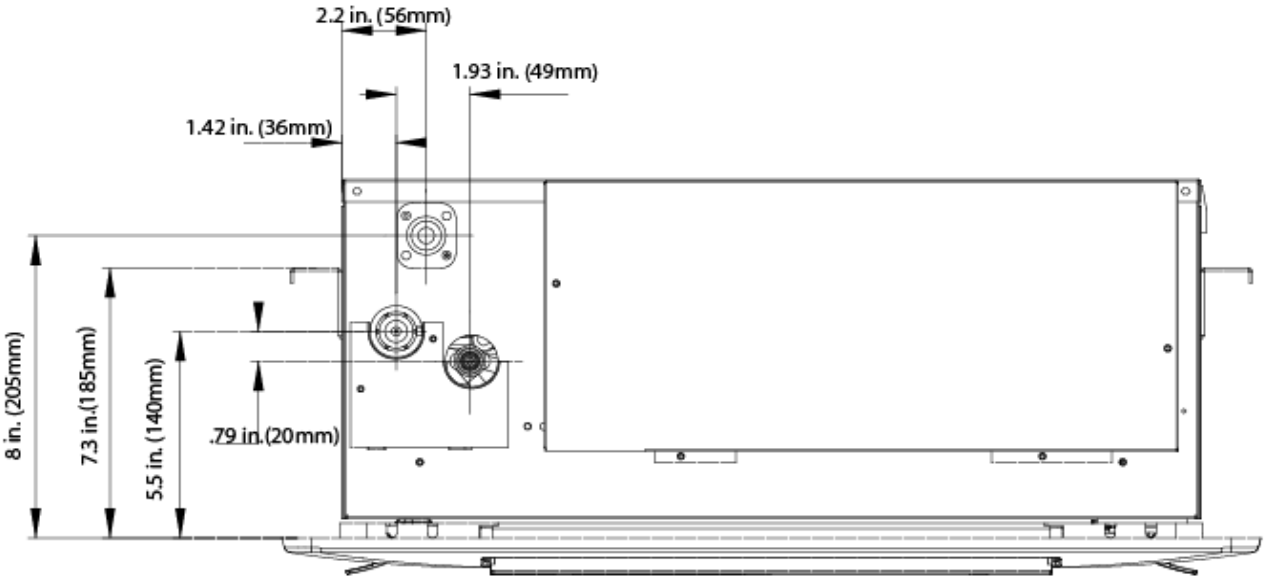

Fig. 6 – Cassette Connection Side View Dimensions

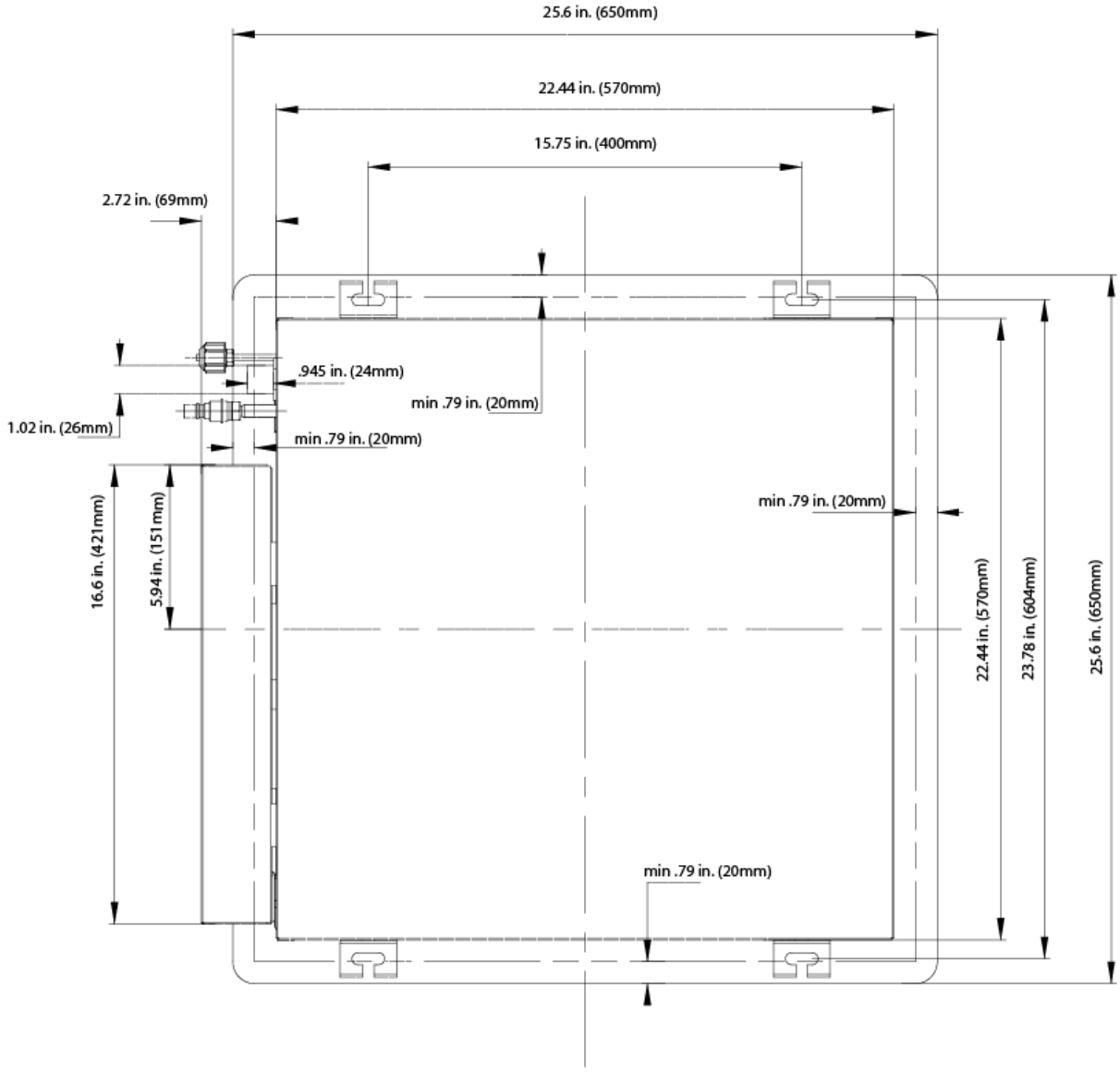

Fig. 7 – Cassette Top View Dimensions

DIMENSIONS - INDOOR (CONTINUED)

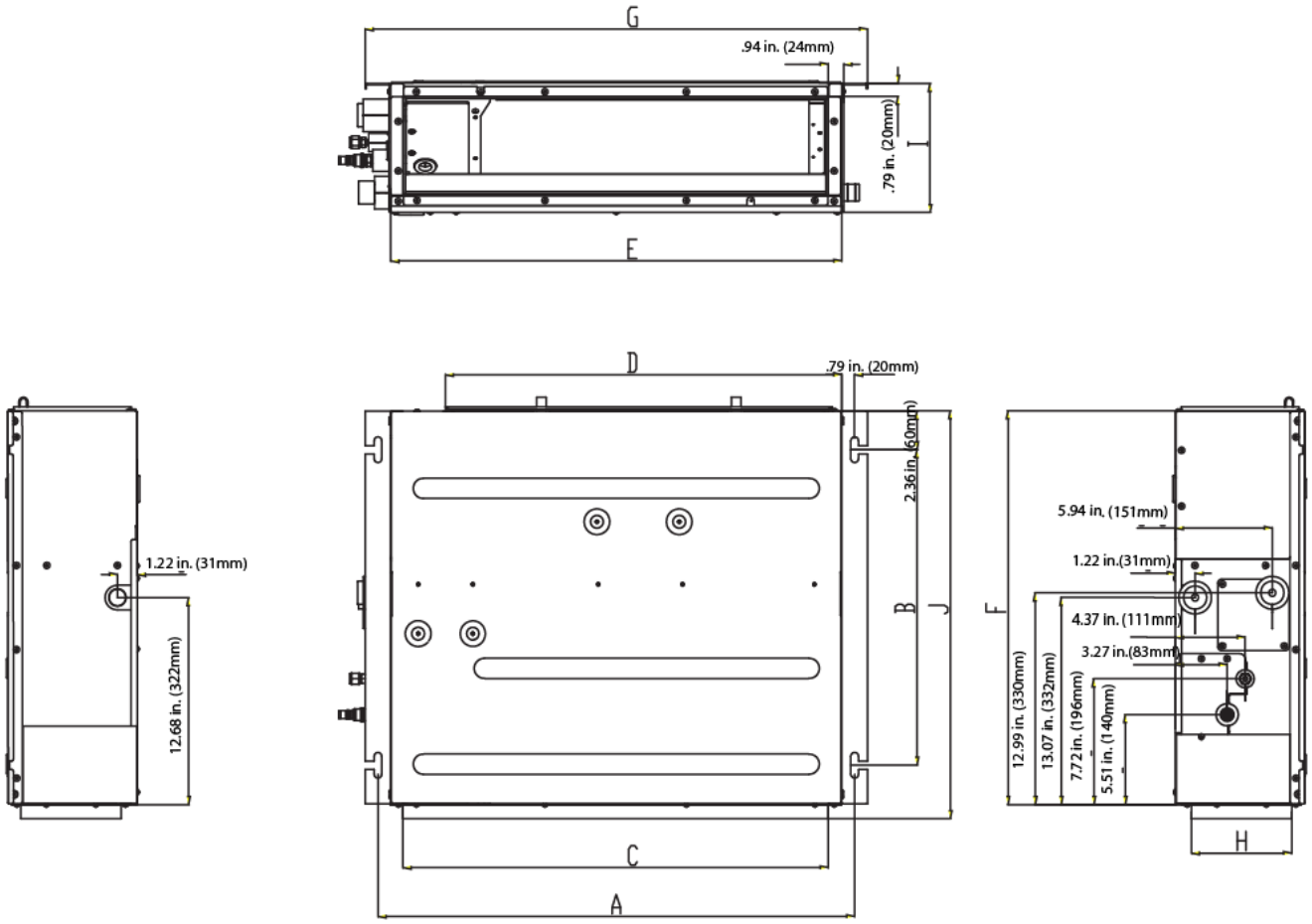

Fig. 8 – Ducted Dimensions

Unit Size	A	B	C	D	E	F	G	H	I	J
9k	742	491	662	620	700	615	782	156	200	635
12k										
18k	942	491	862	820	900	615	982	156	200	635
21k	1142	491	1062	1020	1100	615	1182	156	200	635
24k										

DIMENSIONS - INDOOR (CONTINUED)

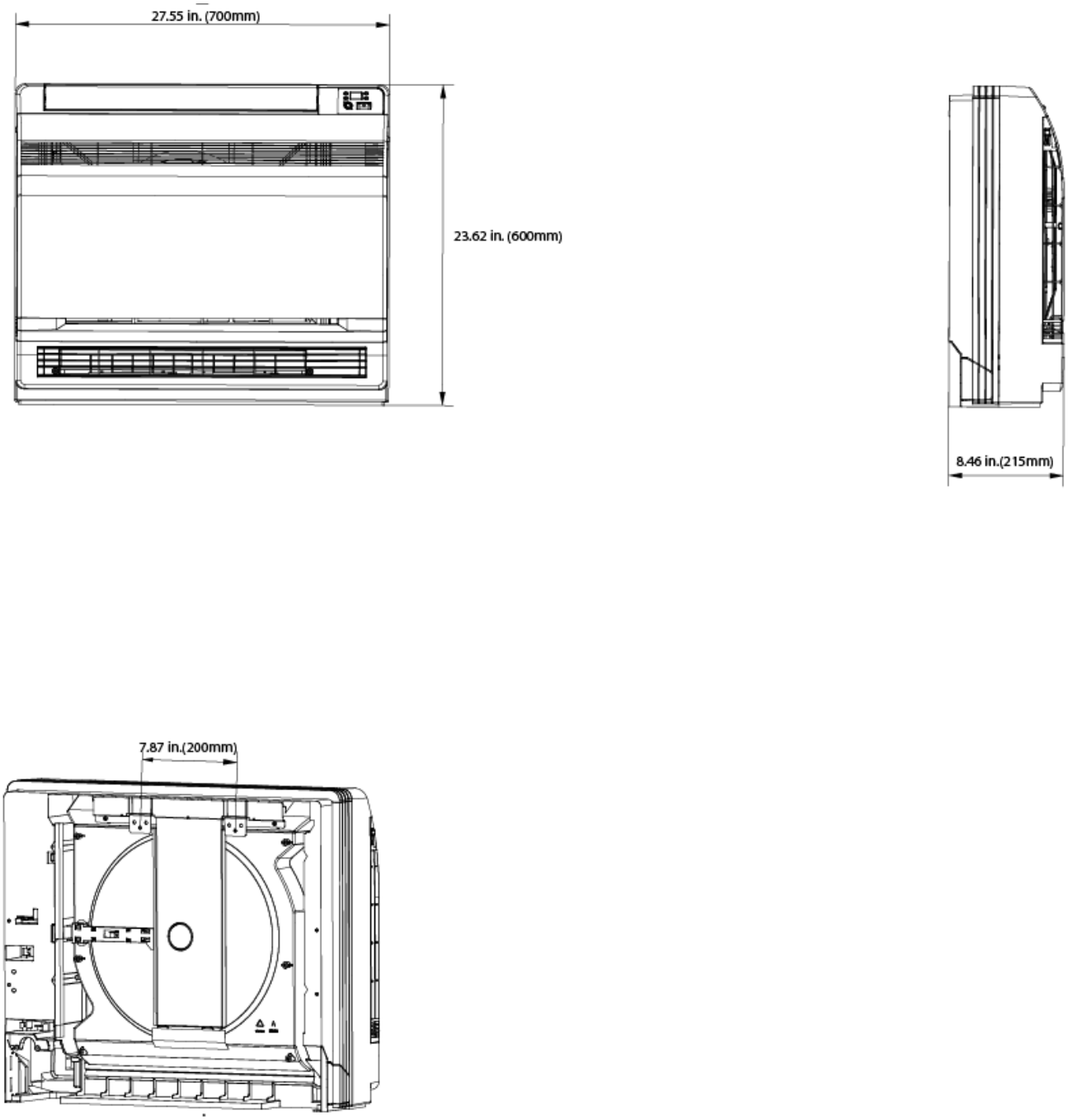

Fig. 9 – Floor Console Dimensions

DIMENSIONS - OUTDOOR

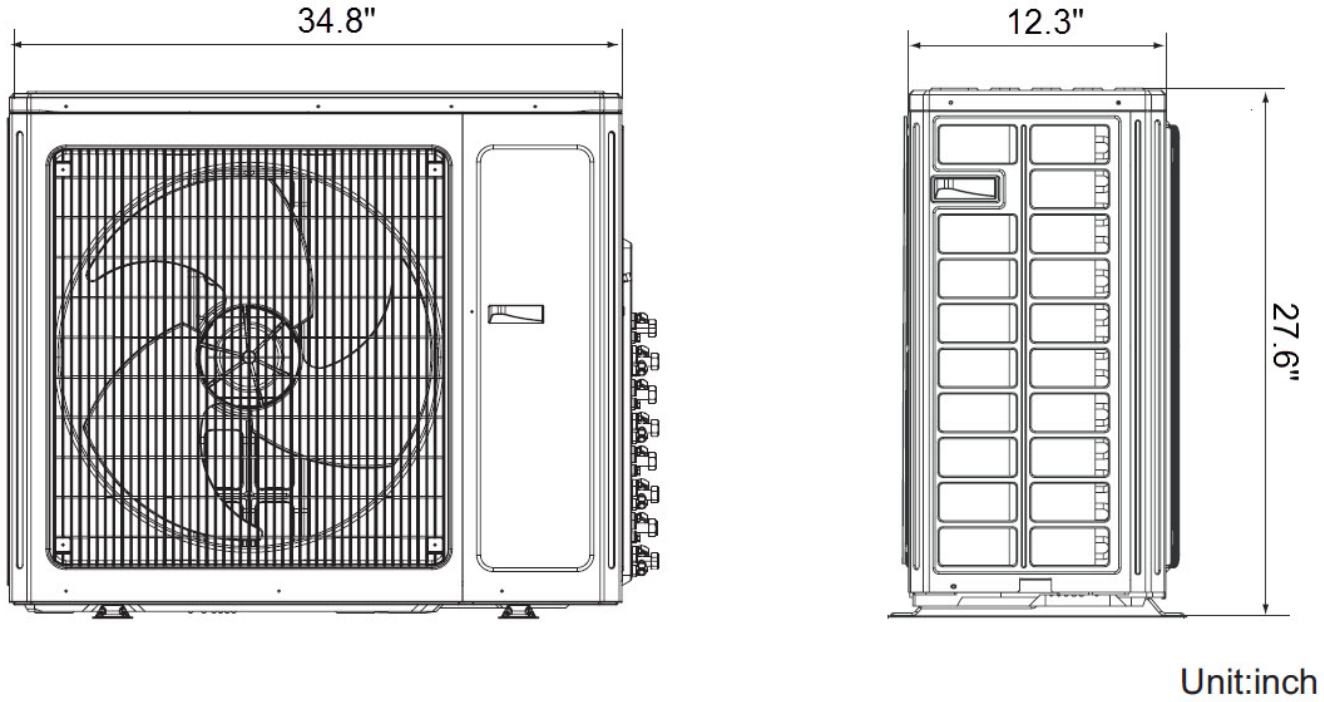

Fig. 10 – Outdoor Dimensions Size 18

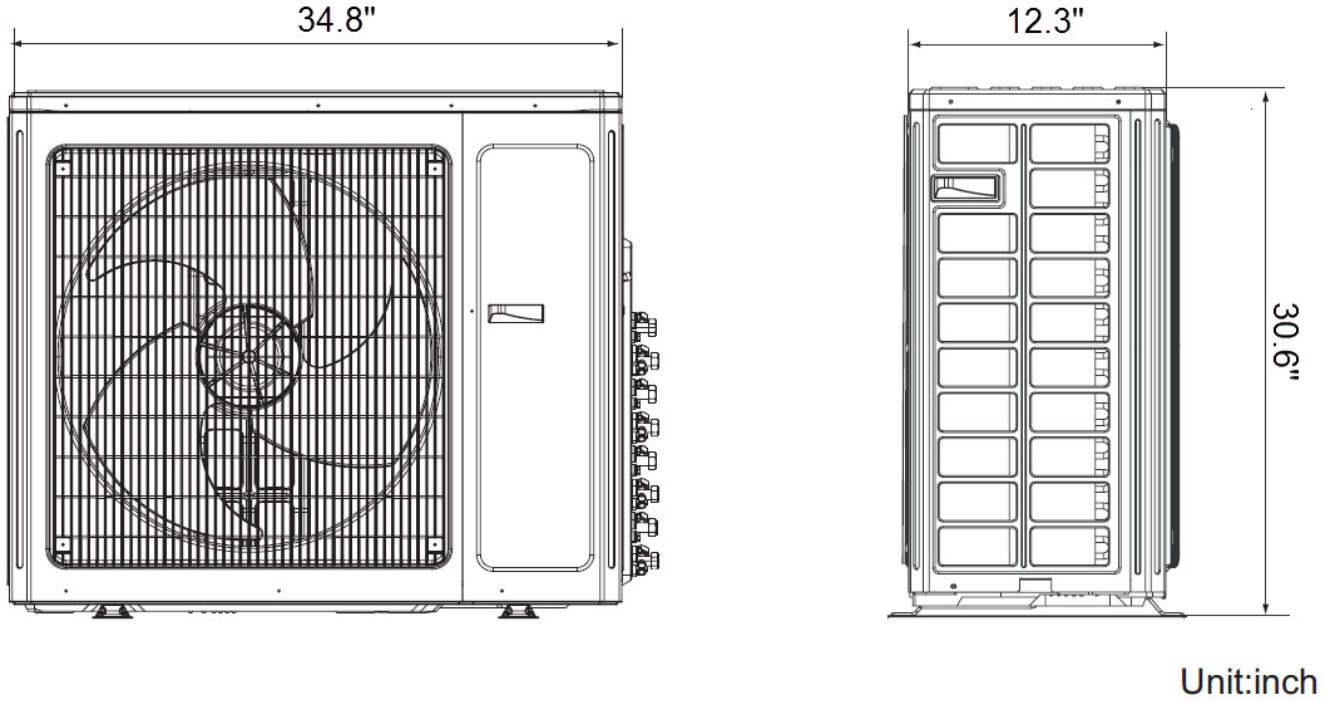

Fig. 11 – Outdoor Dimensions Size 24

DIMENSIONS - OUTDOOR (CONTINUED)

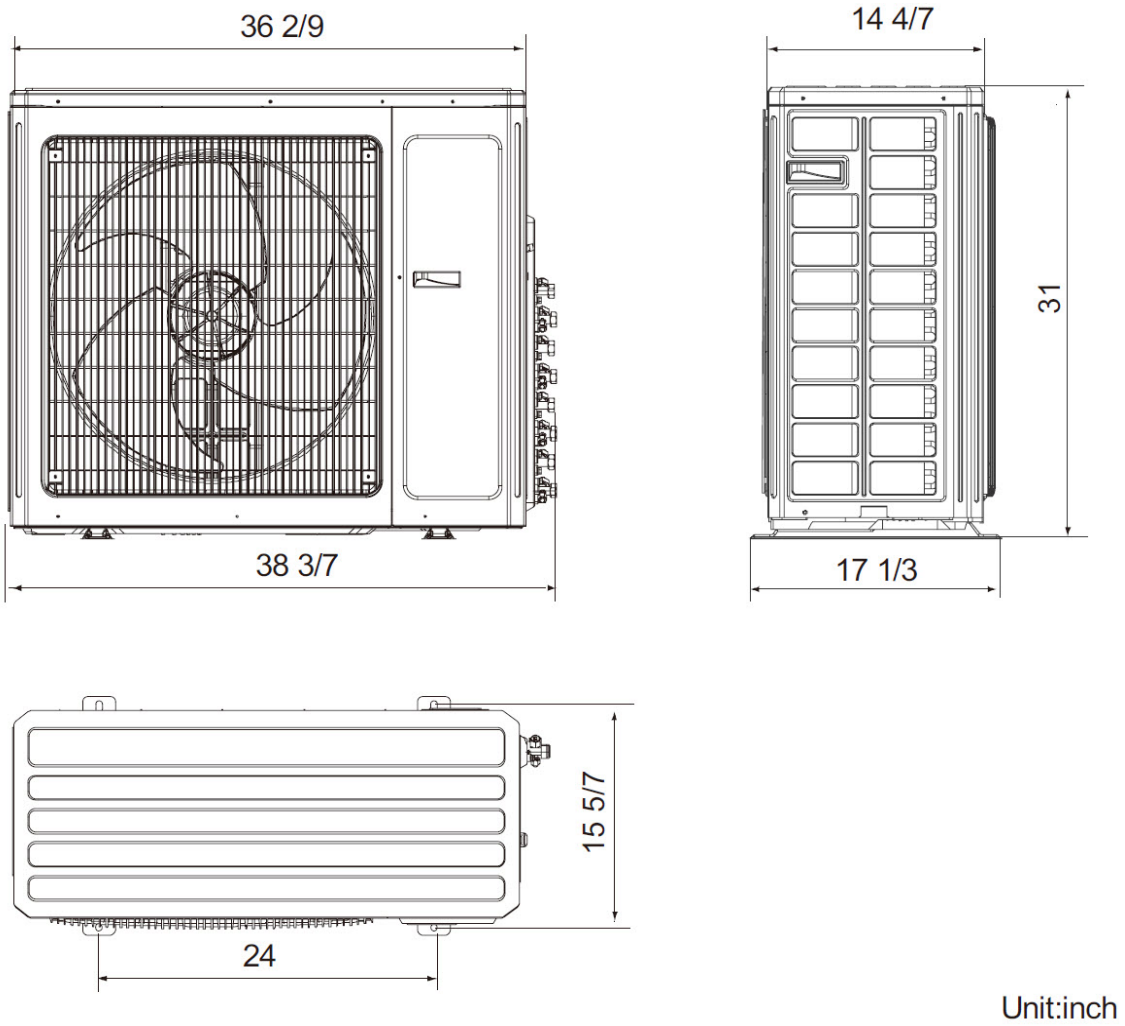

Fig. 12 – Outdoor Dimensions Size 30-42

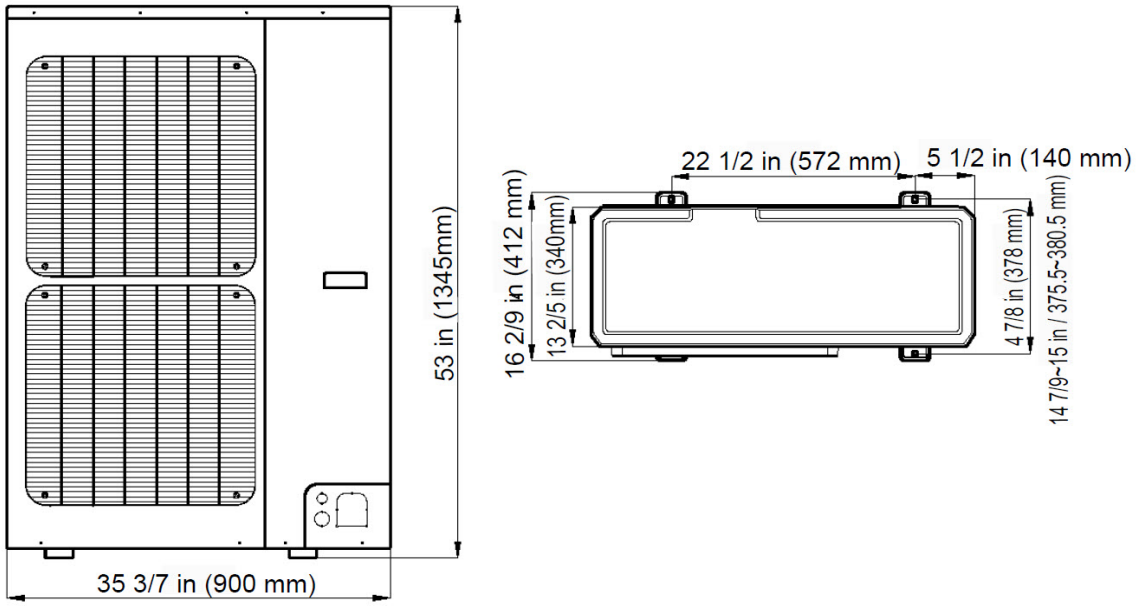

(unit: in/mm)

Fig. 13 – Outdoor Dimensions Size 48-56

DIMENSIONS - BRANCH BOXES (REQUIRED ON SIZES 48 AND 56)

OUTLINE DIMENSION AND SERVICING SPACE OF KSAUI0201AAA

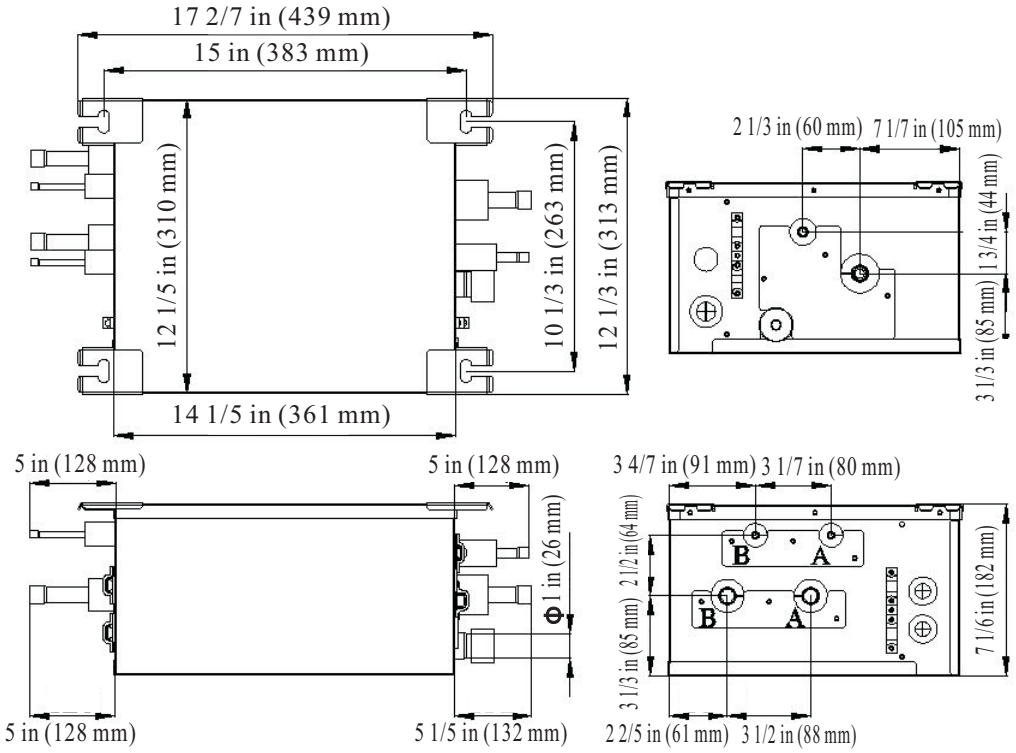

Fig. 14 – Outline Dimensions

Sorts	Indoor unit side (inch/mm)		Outdoor unit side (inch/mm)
	Port A	Port B	
Liquid Pipe	Φ 1/4 (6.5)	Φ 1/4 (6.5)	Φ 38/ (9.7)
Gas Pipe	Φ 5/8 (16.3)	Φ 5/8 (16.3)	Φ 5/8 (16.3)

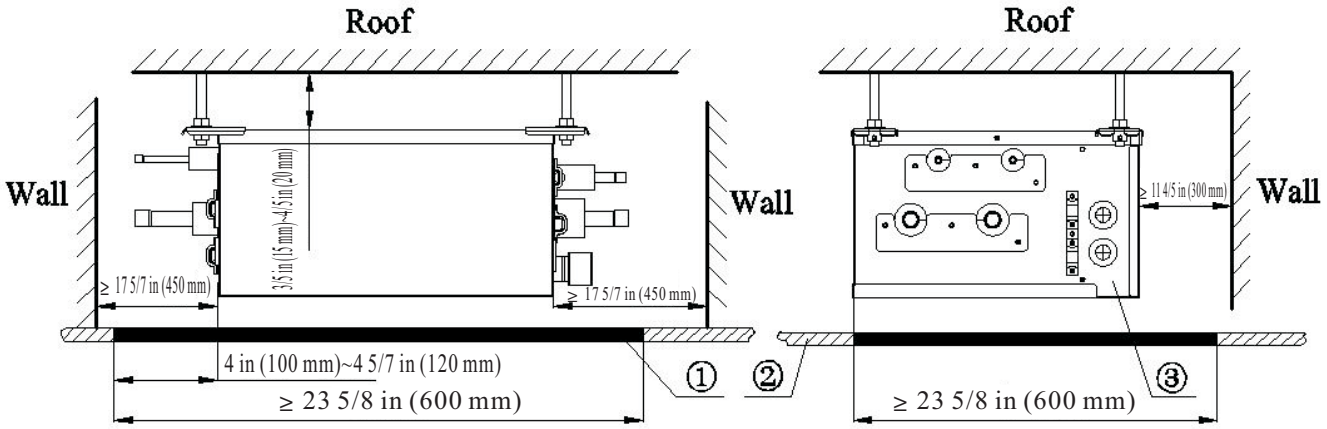

Fig. 15 – Installation and Service Space

No.	1	2	3
Name	Service space	Ceiling	Electrical box side

OUTLINE DIMENSION AND SERVICING SPACE OF KSAUI0401AAA

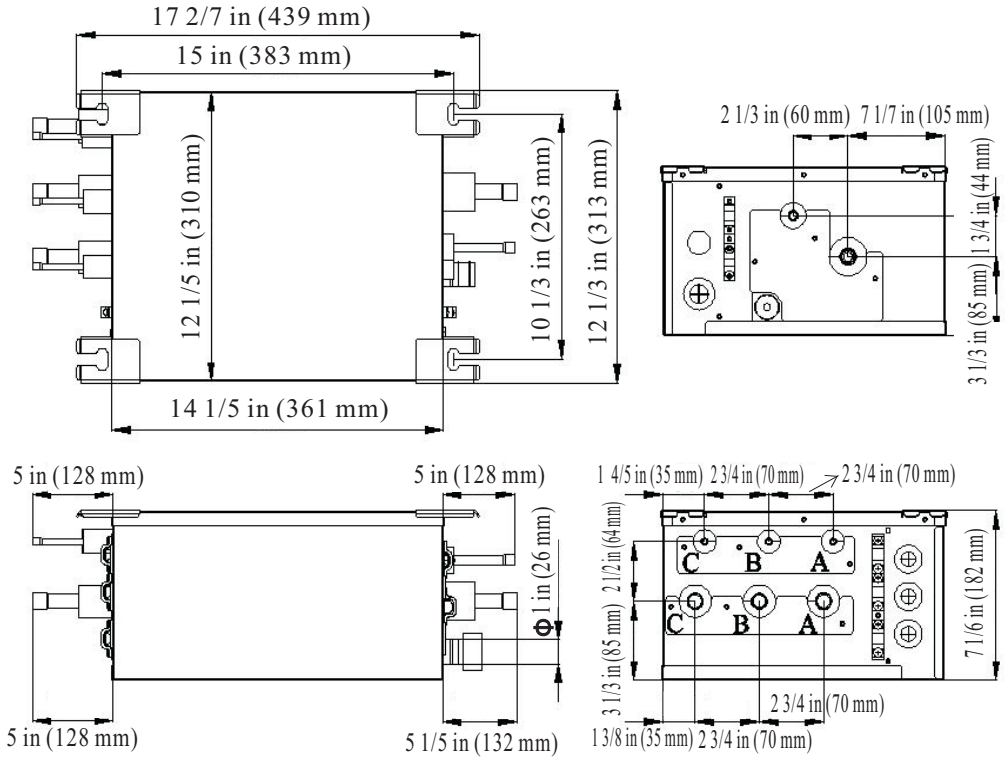

Fig. 16 – Outline Dimensions

Sorts	Indoor unit side (inch/mm)			Outdoor unit side (inch/mm)
	Port A	Port B	Port C	
Liquid pipe	Φ1/4 (6.5)	Φ1/4 (6.5)	Φ1/4 (6.5)	Φ3/8 (9.7)
Gas liquid	Φ5/8 (16.3)	Φ5/8 (16.3)	Φ5/8 (16.3)	Φ5/8 (16.3)

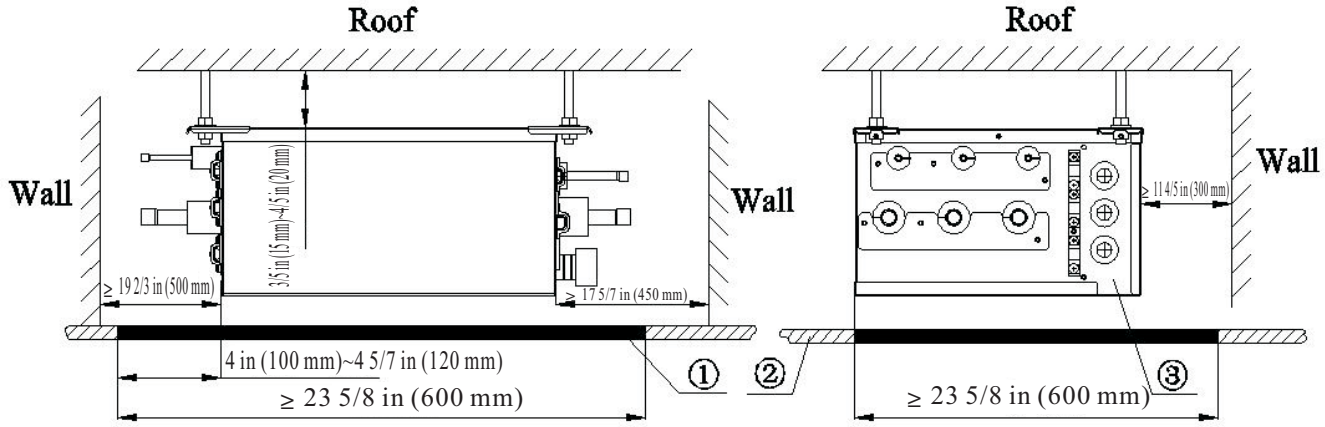

Fig. 17 – Installation and Service Space

No.	1	2	3
Name	Servicing Space	Ceiling	Electrical box side

CLEARANCES - INDOOR

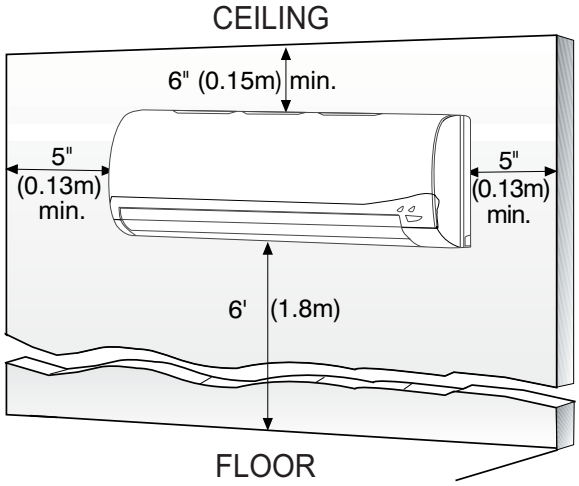

Fig. 18 – F and K*B High Wall Clearance

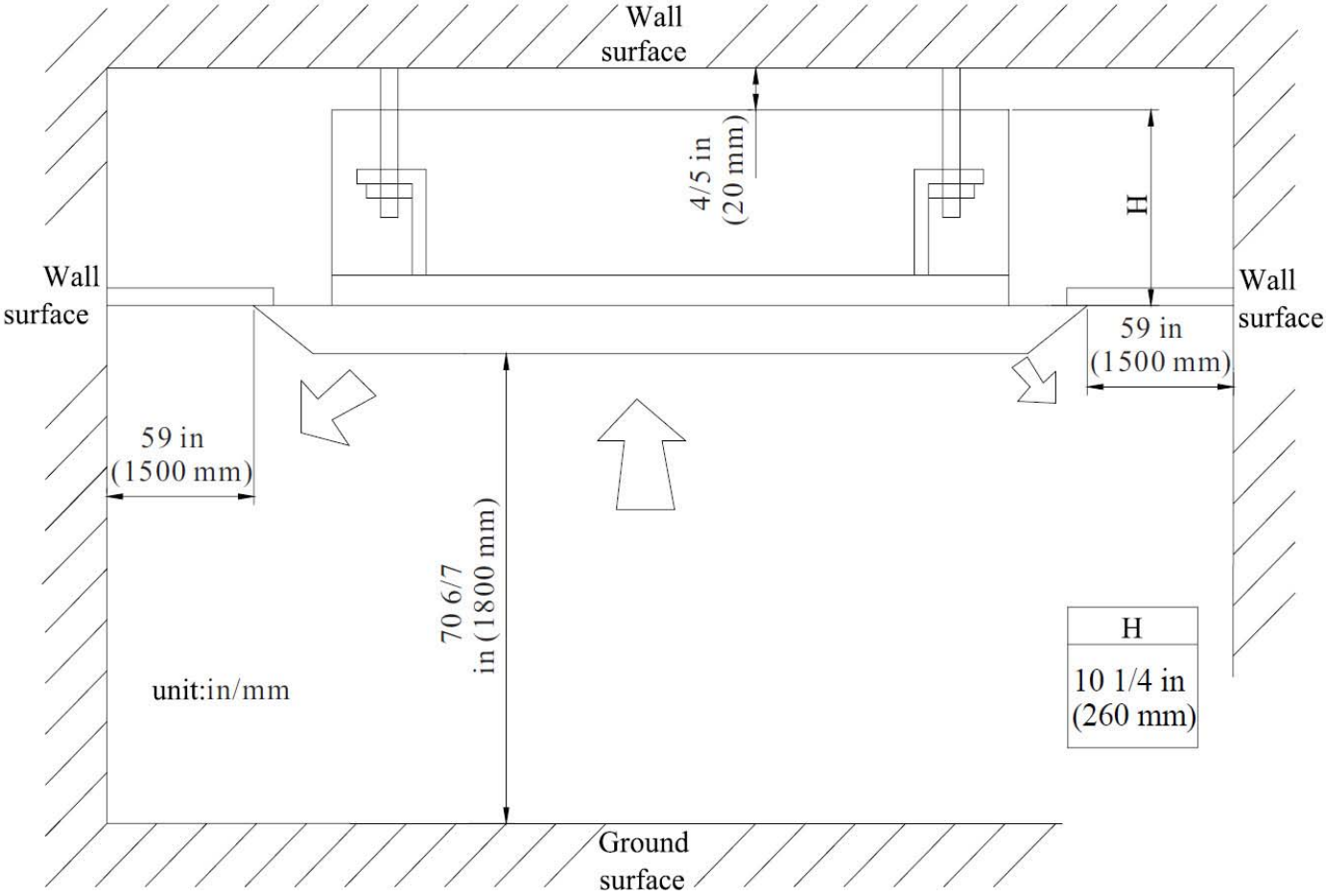

Fig. 19 – Cassette Clearance

CLEARANCES - INDOOR (CONTINUED)

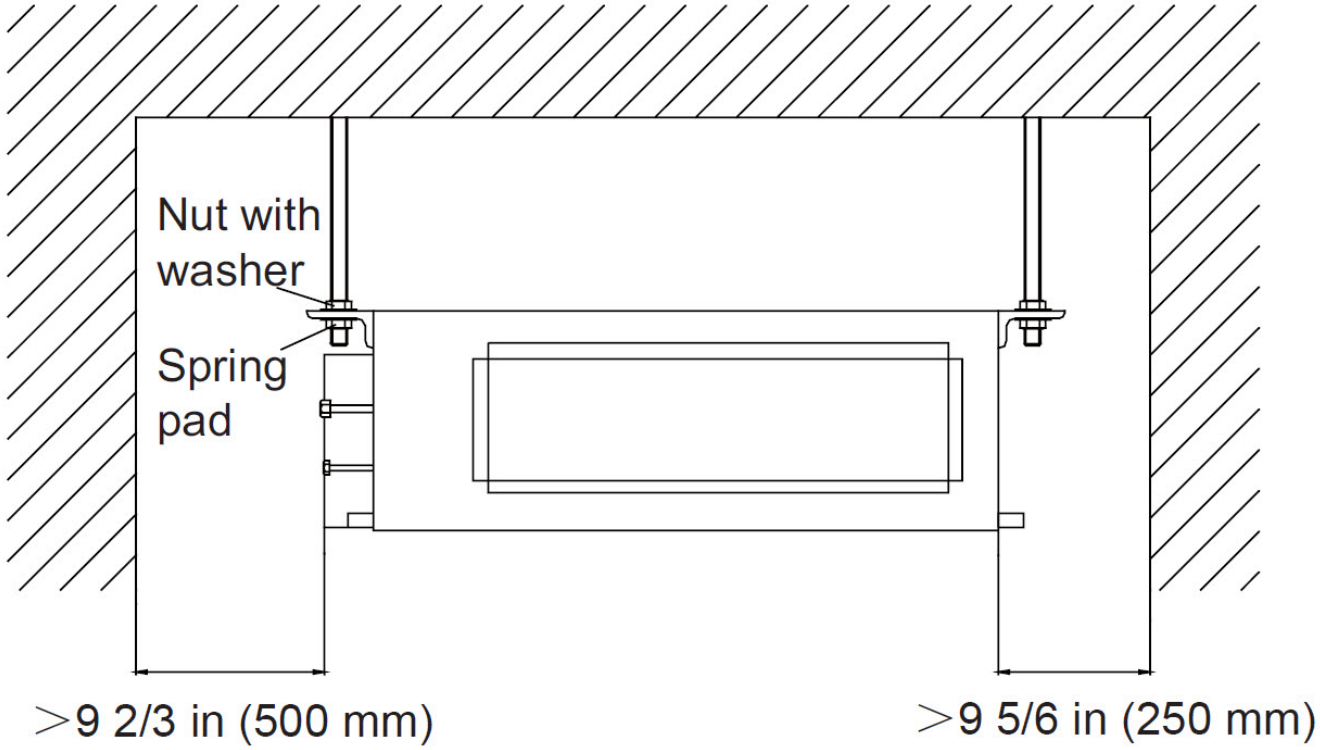

Fig. 20 – Ducted clearance

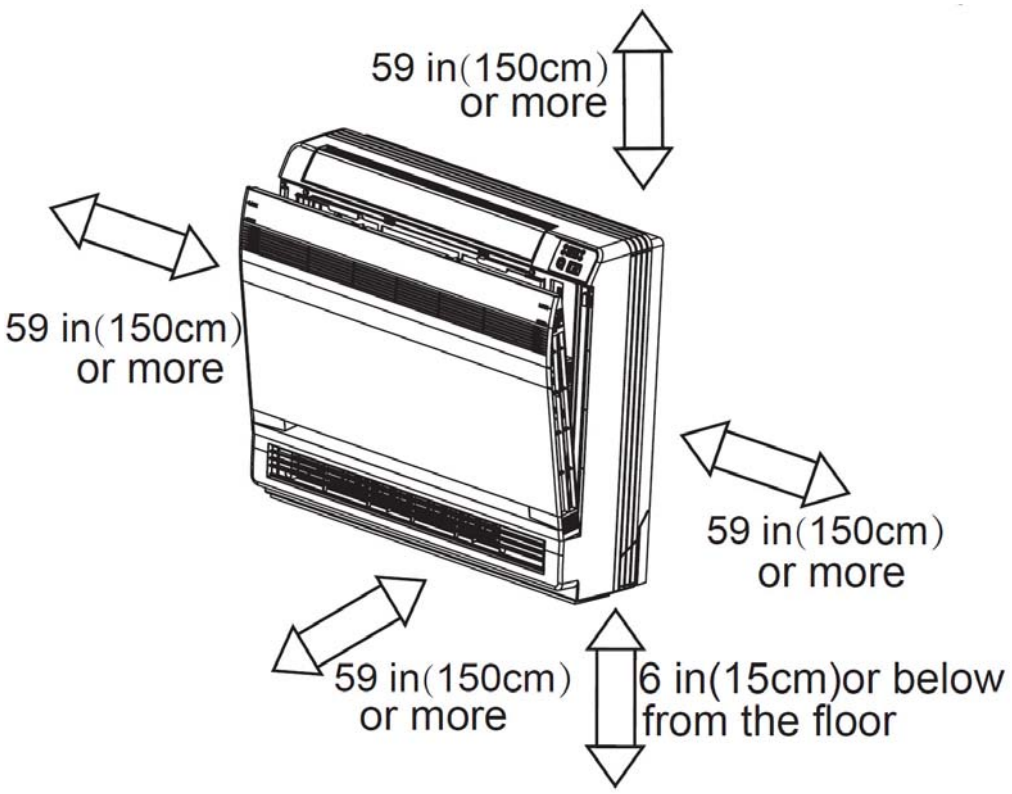

Fig. 21 – Floor console clearance

CLEARANCES - OUTDOOR (CONTINUED)

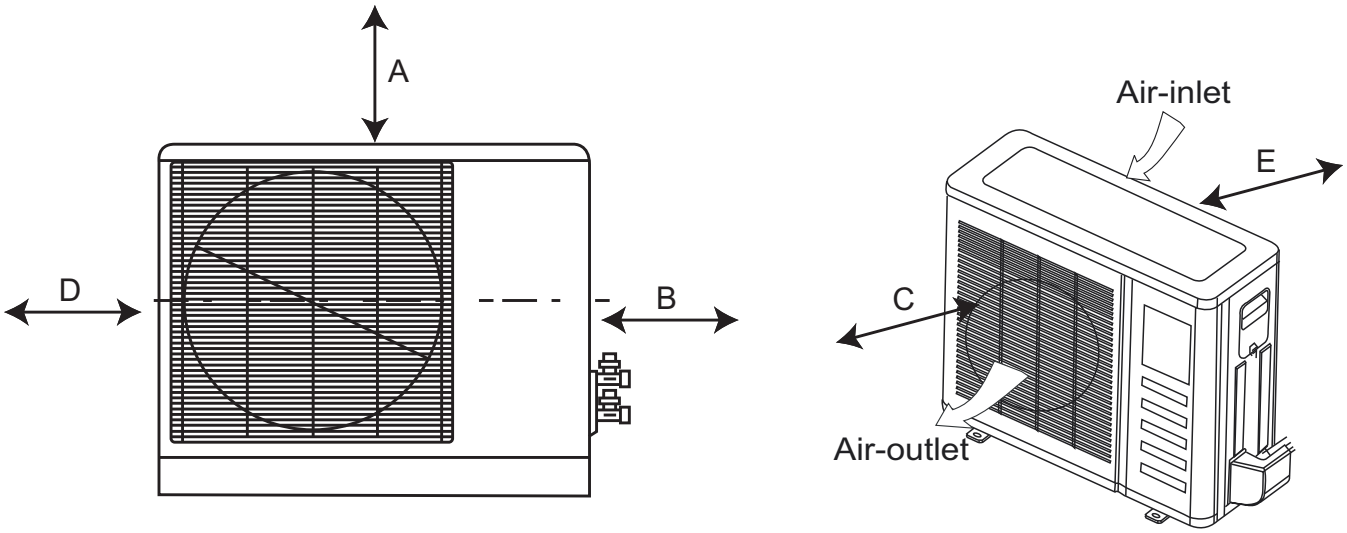

Fig. 22 – Clearances Outdoor 18 - 42

UNIT	Minimum Value in. (mm)
A	24 (609)
B	24 (609)
C	24 (609)
D	4 (101)
E	4 (101)

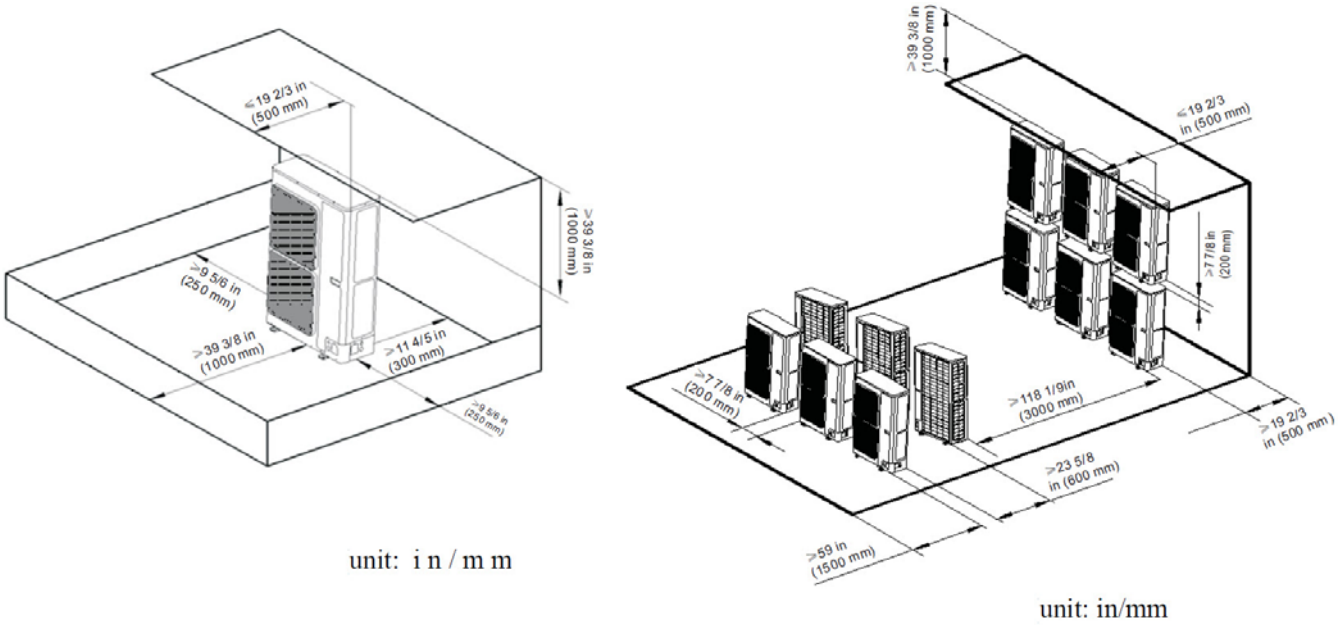

Fig. 23 – Clearances Outdoor 48-56

PHYSICAL DATA - OUTDOOR

	Model		538KEQ						
System	Size–Fan Coil Qty		18RCGA	24RDGA	30RFGA	36RGGA	42RGGA	48RKGA*	56RLGA*
	Max Number of Zones		2	3	4	5	5	8	9
	Energy Star®		YES	NO	NO	NO	NO	NO	NO
Performance Non–Ducted	Cooling Rated Capacity	Btu/h	18,000	26,000	29,000	34,000	39,000	48,000	53,000
	Cooling Cap. Range Min – Max	Btu/h	7000~21000	7500~33000	8189~33438	8871~35826	8871~40944	3412~54592	3412~61416
	SEER		22	20.5	21	21	21	16	16
	EER		12.5	9.5	12	12.4	10.43	9.56	9.45
	Heating Rated Capacity	Btu/h	19,000	29,000	31,600	42,500	45,000	54,500	61,500
	Heating Cap. Range Min – Max	Btu/h	8530~22600	7500~35000	8189~32414	8871~44356	8871~46062	4094~59368	4094~63122
	HSPF		9	10.2	10.2	10.2	10.2	8.2	8.2
	COP	W/W	3.47	3.67	3.75	3.72	3.61	3.64	3.46
Performance Combination Ducted and Non–Ducted	Cooling Rated Capacity	Btu/h	18,000	26,000	29,200	34,000	39,500	48,500	53000
	Cooling Cap. Range Min – Max	Btu/h	7000~21000	7500~33000	7195~32118	16511.5~36395.5	11335.5~41872	7706~53296	8456~58708
	SEER		18	17.25	17.75	17.9	17.85	15.75	15.75
	EER		11	8.75	10.55	11.25	10.1	9.2	9.1
	Heating Rated Capacity	Btu/h	19,000	29,000	31,800	43,000	46,000	54500	61000
	Heating Cap. Range Min – Max	Btu/h	8530~22600	7500~35000	7344.5~32457	8051~44550.5	8185.5~46531	10047~56934	10047~34611
	HSPF		9	9.6	10	9.9	9.9	8.2	8.2
	COP	W/W	3.28	3.32	3.52	3.42	3.36	3.37	3.23
Performance Ducted	Cooling Rated Capacity	Btu/h	18,000	26,000	29,200	34,000	39,500	48,500	52,500
	Cooling Cap. Range Min – Max	Btu/h	7000~21000	7500~33000	6200~30800	12706–36965	13800–42800	12000~52000	13500~56000
	SEER		14	14	14.5	14.8	14.7	15.5	15.5
	EER		9.5	8	9.1	10.1	9.8	8.8	8.7
	Heating Rated Capacity	Btu/h	19,000	29,000	32,000	43,500	46,500	54,500	60,500
	Heating Cap. Range Min – Max	Btu/h	8530~22600	7500~35000	6500–32500	7231–44745	7500–47000	16000~54500	16000~61000
	HSPF		9	9	9.8	9.6	9.6	8.2	8.2
	COP	W/W	3.08	3	3.28	2.96	3.1	3.1	3
Operating Range	Cooling Outdoor DB Min – Max	°F	0~119	0~119	0~119	0~119	0~119	5~119	5~119
	Heating Outdoor DB Min – Max	°F	–4~75	–4~75	–4~75	–4~75	–4~75	–4~75	–4~75
Piping	Total Piping Length	Ft.	65	196	230	246	246	443	476
	Piping to furthest FCU	Ft.	33	65	82	82	82	229	229
	Drop (OD above ID)	Ft.	32	32	49	49	49	98	98
	Lift (OD below ID)	Ft.	33	33	49	49	49	98	98
	Pipe Connection Size – Liquid	In.	1/4”	1/4”	1/4”	1/4”	1/4”	3/8”	3/8”
	Pipe Connection Size – Suction	In.	3/8”	3/8”	3/8”	3/8”	3/8”	5/8”	5/8”
Electrical	Voltage, Phase, Cycle	V/Ph/Hz	208/230–1–60	208/230–1–60	208/230–1–60	208/230–1–60	208/230–1–60	208/230–1–60	208/230–1–60
	Power Supply		Indoor unit powered from outdoor unit						
	MCA	A.	15	21	19	21	24	30	30
	MOCP – Fuse Rating	A.	25	35	30	35	40	50	50
Outdoor	Unit Width	In.	37.6	38.6	38.6	42.8	42.8	35.4	35.4
	Unit Height	In.	27.6	31.1	31.1	43.4	43.4	53	53
	Unit Depth	In.	15.6	16.8	17.3	17.3	17.3	13.4	13.4
	Net Weight	Lbs.	114.7	153.2	145.5	198.4	198.4	255.7	255.7
	Airflow	CFM	1883	2354	2330	4531	4531	3766	4119
	Sound Pressure	dB(A)	56	59	59	61	61	57	57

* Sizes 48 and 56 Require a Branch Box

PHYSICAL DATA - INDOOR

	Size		9	12	18
Indoor High Wall 619FB	Model (White)		619FEQ009HBGA	619FEQ012HBGA	619FEQ018HBGA
	Model (Silver)		619FEQ009BBGA	619FEQ012BBGA	619FEQ018BBGA
	Unit Width	In.	37.8	37.8	37.8
	Unit Height	In.	12.6	12.6	12.6
	Unit Depth	In.	8.1	8.1	8.1
	Net Weight	Lbs.	30.9	30.9	30.9
	Pipe Connection Size - Liquid	In.	1/4"	1/4"	1/4"
	Pipe Connection Size - Suction	In.	1/2"	1/2"	5/8"
	Number of Fan Speeds		7	7	7
	Airflow (lowest to highest)	CFM	206/235/294/324/353/383/412	265/294/353/383/412/441/471	324/353/412/441/471/500/530
	Sound Pressure (lowest to highest)	dB(A)	22/24/26/30/34/38/41	23/25/27/31/35/39/42	26/28/31/35/39/43/48
	Wireless Remote Controller (°F/°C Convertible)		Standard		
	Wired Remote Controller (°F/°C Convertible)		Not Available		

	Size		9	12	18	24
Indoor High Wall 619KB	Model		619KEQ009BBGA	619KEQ012BBGA	619KEQ018BBGA	619KEQ024BBGA
	Unit Width	In.	34.1	34.1	40.1	46.4
	Unit Height	In.	11.5	11.5	12.6	2.8
	Unit Depth	In.	8.2	8.2	9.1	10.4
	Net Weight	Lbs.	24.3	24.3	30.9	38.6
	Pipe Connection Size - Liquid	In.	1/4"	1/4"	1/4"	1/4"
	Pipe Connection Size - Suction	In.	1/2"	1/2"	5/8"	5/8"
	Number of Fan Speeds		7	7	7	7
	Airflow (lowest to highest)	CFM	224/241/271/312/359/394/430	224/241/271/312/659/394/453	282/330/371/418/465/512/589	294/353/412/471/530/588/647
	Sound Pressure (lowest to highest)	dB(A)	23/26/30/34/36/38/42	24/26/30/34/36/38/44	33/36/38/41/44/47/51	38/41/43/45/47/49/52
	Wireless Remote Controller (°F/°C Convertible)		Standard			
	Wired Remote Controller (°F/°C Convertible)		Optional			

	Size		12	18	24
Indoor Cassette	Model		619KEQ012CBGA	619KEQ018CBGA	619KEQ024CBGA
	Unit Width	In.	22.4	22.4	22.4
	Unit Height	In.	9.1	9.1	9.4
	Unit Depth	In.	22.4	22.4	33.1
	Net Weight	Lbs.	39.7	39.7	61.7
	Pipe Connection Size - Liquid	In.	1/4"	1/4"	3/8"
	Pipe Connection Size - Suction	In.	3/8"	1/2"	5/8"
	Number of Fan Speeds		3	3	3
	Airflow	CFM	265/294/353	265/294/353	500/ 559/694
	Sound Pressure (lowest to highest)	dB(A)	42/44/46	42/44/46	35/37/39
	Wireless Remote Controller (°F/°C Convertible)		Standard		
	Wired Remote Controller (°F/°C Convertible)		Standard		

	Size		9	12	18	21	24
Indoor Ducted	Model		619KEQ009DBGA	619KEQ012DBGA	619KEQ018DBGA	619KEQ021DBGA	619KEQ024DBGA
	Unit Width	In.	24.2	24.2	24.2	24.2	24.2
	Unit Height	In.	7.9	7.9	7.9	7.9	7.9
	Unit Depth	In.	27.6	27.6	35.4	43.3	43.3
	Net Weight	Lbs.	48.5	50.7	59.5	68.3	68.3
	Pipe Connection Size - Liquid	In.	1/4"	1/4"	1/4"	3/8"	3/8"
	Pipe Connection Size - Suction	In.	3/8"	3/8"	1/2"	5/8"	5/8"
	Number of Fan Speeds		3	3	3	3	3
	Airflow (lowest to highest)	CFM	147/176/264	176/235/323	294/353/411	323/441/588	323/441/588
	Sound Pressure (lowest to highest)	dB(A)	31/34/37	32/35/39	33/37/41	34/38/42	34/38/42
	Max Static Pressure	In.WG.	0.04	0.04	0.04	0.06	0.06
	Wireless Remote Controller (°F/°C Convertible)		Standard				
	Wired Remote Controller (°F/°C Convertible)		Standard				

	Size		9	12	18
Indoor Floor Console	Model		619KEQ009FBGA	619KEQ012FBGA	619KEQ018FBGA
	Unit Width	In.	8.5	8.5	8.5
	Unit Height	In.	23.6	23.6	23.6
	Unit Depth	In.	27.6	27.6	27.6
	Net Weight	Lbs.	33.1	33.1	33.1
	Pipe Connection Size - Liquid	In.	1/4"	1/4"	1/4"
	Pipe Connection Size - Suction	In.	3/8"	3/8"	1/2"
	Number of Fan Speeds		7	7	7
	Airflow (lowest to highest)	CFM	188/217/253/282/311/ 329/ 382	205/ 264/294/ 323/353/ 382/441	241/311/ 341/ 382/ 423/470/ 494
	Sound Pressure (lowest to highest)	dB(A)	25/ 26/ 30/ 33/ 36/ 38/ 40	27/ 32/ 35/ 37/ 38/ 40/43	33/ 35/ 37/ 41/ 44/ 46/ 48
	Wireless Remote Controller (°F/°C Convertible)		Standard		
	Wired Remote Controller (°F/°C Convertible)		Not Available		

COOLING PERFORMANCE

Model	Cooling			Outdoor conditions (DB)						
	Indoor Conditions									
	DB	WB		68F(20C)	77F(25C)	86F(30C)	95F(35C)	104F(40C)	113F(45C)	118F(48C)
18	70F(21C)	59F(15C)	TC	17.28	17.08	16.24	15.37	14.62	13.87	13.50
			SC	13.55	13.40	12.73	12.05	11.47	10.88	10.59
			Input	1.22	1.25	1.40	1.51	1.56	1.59	1.61
	75F(24C)	63F(17C)	TC	18.36	18.16	17.32	16.44	15.69	14.94	14.40
			SC	14.40	14.25	13.58	12.89	12.31	11.72	11.29
			Input	1.26	1.29	1.45	1.55	1.61	1.64	1.66
	80F(27C)	67F(19C)	TC	19.62	19.44	18.90	18.00	17.53	16.79	16.20
			SC	15.39	15.25	14.82	14.12	13.75	13.16	12.71
			Input	1.34	1.38	1.53	1.65	1.71	1.74	1.76
	90F(32C)	73F(23C)	TC	22.50	22.32	21.63	20.72	19.97	19.22	18.54
			SC	17.65	17.50	16.96	16.25	15.66	15.08	14.54
			Input	1.43	1.47	1.64	1.77	1.83	1.86	1.88
24	70F(21C)	59F(15C)	TC	24.96	24.67	23.45	22.20	21.12	20.04	19.50
			SC	19.58	19.35	18.39	17.41	16.57	15.71	15.29
			Input	2.03	2.08	2.33	2.50	2.58	2.64	2.67
	75F(24C)	63F(17C)	TC	26.52	26.24	25.01	23.75	22.66	21.58	20.80
			SC	20.80	20.58	19.62	18.62	17.78	16.93	16.31
			Input	2.09	2.15	2.40	2.58	2.67	2.72	2.75
	80F(27C)	67F(19C)	TC	28.34	28.08	27.30	26.00	25.33	24.25	23.40
			SC	22.23	22.03	21.41	20.39	19.87	19.02	18.36
			Input	2.22	2.28	2.55	2.74	2.83	2.90	2.92
	90F(32C)	73F(23C)	TC	32.50	32.24	31.24	29.93	28.85	27.77	26.78
			SC	25.49	25.28	24.50	23.47	22.62	21.78	21.01
			Input	2.37	2.45	2.73	2.93	3.03	3.10	3.12
30	70F(21C)	59F(15C)	TC	24.52	28.63	30.86	28.91	22.85	17.84	13.70
			SC	21.13	23.26	24.17	23.13	20.91	17.66	13.63
			Input	1.74	2.11	2.83	3.10	2.57	2.17	1.71
	75F(24C)	63F(17C)	TC	27.55	31.07	33.08	31.22	24.55	19.21	15.03
			SC	23.71	25.50	26.13	25.30	22.87	19.06	14.91
			Input	1.76	2.11	2.85	3.12	2.58	2.21	1.76
	80F(27C)	67F(19C)	TC	30.31	33.85	35.18	33.65	26.05	25.74	16.63
			SC	25.70	27.39	32.71	26.15	24.46	25.11	16.38
			Input	2.01	2.37	2.91	3.21	2.77	2.84	1.90
	90F(32C)	73F(23C)	TC	31.23	37.37	39.60	37.01	28.32	21.80	17.77
			SC	29.20	28.57	29.29	28.52	25.17	21.39	17.43
			Input	2.03	2.40	2.96	3.27	2.67	2.24	1.87
36	70F(21C)	59F(15C)	TC	32.62	35.15	35.49	32.18	27.45	23.54	16.38
			SC	29.56	30.30	30.37	28.78	26.44	23.20	16.23
			Input	2.01	2.45	3.12	3.30	3.08	2.77	1.86
	75F(24C)	63F(17C)	TC	33.42	39.24	38.44	35.83	30.10	25.64	17.50
			SC	30.04	31.41	32.36	31.26	28.54	24.93	17.24
			Input	2.00	2.44	3.13	3.40	3.09	2.79	1.91
	80F(27C)	67F(19C)	TC	34.58	38.80	38.98	36.08	30.79	26.96	19.04
			SC	31.73	32.79	33.01	31.92	29.86	25.78	18.35
			Input	2.01	2.44	3.16	3.34	3.12	2.80	1.99
	90F(32C)	73F(23C)	TC	41.53	45.04	45.21	41.01	35.45	29.69	20.19
			SC	33.69	34.87	34.65	34.27	32.67	28.83	19.92
			Input	2.03	2.43	3.19	3.41	3.15	2.83	2.02
42	70F(21C)	59F(15C)	TC	33.01	35.21	36.51	33.78	29.48	23.20	16.79
			SC	29.75	29.17	29.04	29.34	27.30	22.49	16.51
			Input	1.98	2.48	3.65	3.64	3.60	2.75	1.99
	75F(24C)	63F(17C)	TC	33.58	37.98	38.54	36.61	33.83	25.78	18.25
			SC	29.40	30.97	31.24	31.80	30.93	24.57	17.67
			Input	1.99	2.69	3.56	3.49	3.65	2.78	2.10
	80F(27C)	67F(19C)	TC	37.50	41.39	43.33	40.81	34.97	28.66	19.38
			SC	32.13	33.54	34.12	33.78	32.59	26.68	18.53
			Input	2.00	2.82	3.60	3.59	3.67	2.80	2.16
	90F(32C)	73F(23C)	TC	44.87	47.80	48.57	41.41	37.87	29.86	20.53
			SC	34.14	34.46	35.33	33.81	32.72	28.03	19.75
			Input	2.21	2.52	3.28	3.56	3.74	2.83	2.20
48	70F(21C)	59F(15C)	TC	44.21	47.63	48.09	43.61	37.20	31.91	23.72
			SC	39.83	39.10	38.71	37.20	34.34	30.76	22.87
			Input	3.23	3.94	5.01	5.30	4.94	4.44	3.30
	75F(24C)	63F(17C)	TC	45.29	53.18	52.09	48.55	40.79	34.75	24.97
			SC	39.18	42.57	42.25	41.32	37.56	33.40	23.92
			Input	3.20	3.91	5.02	5.46	4.96	4.48	3.31
	80F(27C)	67F(19C)	TC	46.87	52.58	52.83	48.90	41.73	36.53	25.96
			SC	39.51	41.85	42.32	40.64	38.52	34.94	24.69
			Input	3.23	3.92	5.08	5.36	5.00	4.50	3.36
	90F(32C)	73F(23C)	TC	56.28	61.04	61.27	55.58	48.05	40.23	26.61
			SC	44.74	47.12	46.96	45.86	41.56	38.38	25.50
			Input	3.25	3.90	5.12	5.47	5.05	4.54	3.41
56	70F(21C)	59F(15C)	TC	41.40	44.16	45.79	42.37	36.97	29.10	24.57
			SC	37.06	35.86	36.13	36.27	33.35	27.88	23.68
			Input	3.19	4.00	5.88	5.86	5.80	4.43	3.32
	75F(24C)	63F(17C)	TC	42.11	47.63	48.34	45.92	42.43	32.33	26.33
			SC	36.05	38.39	39.18	39.31	38.48	30.65	25.14
			Input	3.21	4.33	5.73	5.61	5.87	4.47	3.41
	80F(27C)	67F(19C)	TC	47.03	51.91	54.35	51.18	43.86	35.95	27.55
			SC	39.93	42.07	42.72	41.92	40.66	33.36	26.26
			Input	3.22	4.54	5.80	5.78	5.91	4.51	3.48
	90F(32C)	73F(23C)	TC	56.27	59.95	60.92	51.93	47.50	37.45	29.00
			SC	43.22	43.65	43.80	42.84	40.80	34.86	27.50
			Input	3.56	4.05	5.28	5.73	6.02	4.56	3.64

LEGEND
DB --- Dry Bulb
WB --- Wet Bulb
TC --- Total Net Cooling Capacity (1000 Btu/hour)
SC --- Sensible Capacity (1000 Btu/hour)
Input --- Total Power (kW)

HEATING PERFORMANCE

Model	Heating Indoor Conditions DB	Heating Indoor Conditions WB		Outdoor conditions (DB)/(WB) 0F(-18C) / 3.2F(-16C)	5F(-15C) / 3.2F(-16C)	7F(-13.88C) / 5F(-15C)	17F(-8.33C) / 15F(-9.4C)	28F(-2.2C) / 25F(-3.9C)	F(3.3C) / 35F(1.7C)	47F(8.3C) / 43F(6.1C)	57F(13.9C) / 55F(12.7C)
18	59F(15C)	F(10C)	TH	11.12	11.43	11.74	12.60	14.23	17.69	20.00	20.66
			SC	11.12	11.43	11.74	12.60	14.23	17.69	20.00	20.66
			Input	1.09	1.12	1.14	1.19	1.27	1.46	1.52	1.55
	F(18C)	54F(12C)	TH	10.80	11.10	11.40	12.23	13.86	17.32	19.39	20.03
			SC	10.80	11.10	11.40	12.23	13.86	17.32	19.39	20.03
			Input	1.12	1.14	1.17	1.22	1.30	1.49	1.55	1.58
	70F(21C)	59F(15C)	TH	10.60	10.89	11.18	12.00	13.46	16.93	19.01	19.64
			SC	10.60	10.89	11.18	12.00	13.46	16.93	19.01	19.64
			Input	1.16	1.18	1.21	1.26	1.35	1.55	1.61	1.64
	75F(24C)	63F(17C)	TH	10.32	10.61	10.89	11.68	13.30	16.76	18.48	19.09
			SC	10.32	10.61	10.89	11.68	13.30	16.76	18.48	19.09
			Input	1.18	1.21	1.24	1.29	1.38	1.58	1.65	1.68
24	59F(15C)	F(10C)	TH	16.97	17.44	17.91	19.22	21.72	27.00	30.52	31.52
			SC	16.97	17.44	17.91	19.22	21.72	27.00	30.52	31.52
			Input	1.58	1.61	1.65	1.72	1.83	2.11	2.19	2.23
	F(18C)	54F(12C)	TH	16.48	16.94	17.39	18.66	21.15	26.43	29.59	30.57
			SC	16.48	16.94	17.39	18.66	21.15	26.43	29.59	30.57
			Input	1.61	1.65	1.68	1.75	1.87	2.15	2.24	2.28
	70F(21C)	59F(15C)	TH	16.18	16.62	17.07	18.31	20.54	25.83	29.00	29.96
			SC	16.18	16.62	17.07	18.31	20.54	25.83	29.00	29.96
			Input	1.67	1.71	1.74	1.82	1.94	2.23	2.32	2.36
	75F(24C)	63F(17C)	TH	15.75	16.19	16.62	17.83	20.29	25.58	28.21	29.13
			SC	15.75	16.19	16.62	17.83	20.29	25.58	28.21	29.13
			Input	1.71	1.75	1.78	1.86	1.98	2.28	2.37	2.42
30	59F(15C)	F(10C)	TH	17.35	20.43	22.38	22.45	27.47	37.12	38.56	40.26
			SC	17.35	20.43	22.38	22.45	27.47	37.12	38.56	40.26
			Input	2.69	2.94	2.82	2.15	2.75	2.85	2.95	2.48
	F(18C)	54F(12C)	TH	16.68	19.72	21.84	22.28	27.98	30.71	37.70	39.58
			SC	16.68	19.72	21.84	22.28	27.98	30.71	37.70	39.58
			Input	2.77	3.06	2.95	2.28	2.98	2.95	3.10	2.63
	70F(21C)	59F(15C)	TH	16.12	19.25	22.01	22.01	26.96	30.20	36.68	39.07
			SC	16.12	19.25	22.01	22.01	26.96	30.20	36.68	39.07
			Input	2.84	3.12	3.10	2.40	3.08	3.10	3.22	2.75
	75F(24C)	63F(17C)	TH	15.79	18.92	21.84	21.77	27.13	29.17	36.34	37.81
			SC	15.79	18.92	21.84	21.77	27.13	29.17	36.34	37.81
			Input	2.96	3.19	3.15	2.50	3.13	3.20	3.40	2.93
36	59F(15C)	F(10C)	TH	21.45	23.37	25.52	30.30	33.17	41.12	38.90	40.95
			SC	21.45	23.37	25.52	30.30	33.17	41.12	38.90	40.95
			Input	3.37	3.59	3.45	3.20	2.96	3.28	2.37	2.00
	F(18C)	54F(12C)	TH	20.99	22.78	26.21	29.86	32.55	39.92	38.39	40.26
			SC	20.99	22.78	26.21	29.86	32.55	39.92	38.39	40.26
			Input	3.44	3.63	3.44	3.36	3.10	3.30	2.52	2.14
	70F(21C)	59F(15C)	TH	20.63	22.47	28.24	29.75	32.42	39.24	37.53	39.24
			SC	20.63	22.47	28.24	29.75	32.42	39.24	37.53	39.24
			Input	3.51	3.78	3.69	3.49	3.24	3.58	2.66	2.25
	75F(24C)	63F(17C)	TH	20.35	22.03	28.87	30.03	31.94	36.48	36.10	38.56
			SC	20.35	22.03	28.87	30.03	31.94	36.48	36.10	38.56
			Input	3.62	3.85	3.79	3.60	3.41	3.58	2.78	2.42
42	59F(15C)	F(10C)	TH	21.85	24.74	27.26	31.13	31.56	43.27	39.14	40.26
			SC	21.85	24.74	27.26	31.13	31.56	43.27	39.14	40.26
			Input	3.57	3.69	3.58	3.38	3.32	3.58	2.38	2.02
	F(18C)	54F(12C)	TH	21.74	23.61	27.64	30.98	32.07	43.33	38.39	39.92
			SC	21.74	23.61	27.64	30.98	32.07	43.33	38.39	39.92
			Input	3.65	3.76	3.55	3.40	3.30	3.63	2.53	2.15
	70F(21C)	59F(15C)	TH	21.62	23.49	28.42	30.89	31.89	41.63	37.53	38.97
			SC	21.62	23.49	28.42	30.89	31.89	41.63	37.53	38.97
			Input	3.73	3.82	3.66	3.57	3.40	3.76	2.65	2.30
	75F(24C)	63F(17C)	TH	21.55	23.15	28.08	30.57	29.86	41.29	36.92	38.90
			SC	21.55	23.15	28.08	30.57	29.86	41.29	36.92	38.90
			Input	3.82	3.90	3.76	3.69	3.40	3.91	2.82	2.42
48	59F(15C)	F(10C)	TH	26.65	32.18	37.12	44.07	48.24	52.98	56.58	59.56
			SC	26.65	36.85	37.12	44.07	48.24	52.98	56.58	59.56
			Input	5.17	5.29	5.18	4.80	4.44	4.92	4.94	4.30
	F(18C)	54F(12C)	TH	25.82	30.48	38.12	43.43	47.35	51.24	55.84	58.56
			SC	25.82	35.62	38.12	43.43	47.35	51.24	55.84	58.56
			Input	5.22	5.36	5.16	5.04	4.65	4.95	5.01	4.42
	70F(21C)	59F(15C)	TH	24.13	29.16	41.07	43.28	47.15	50.25	54.72	57.08
			SC	24.13	33.44	41.07	43.28	47.15	50.25	54.72	57.08
			Input	5.27	5.45	5.34	5.14	4.86	5.07	5.16	4.58
	75F(24C)	63F(17C)	TH	22.58	27.77	41.99	43.68	46.45	49.64	52.51	56.08
			SC	22.58	29.48	41.99	43.68	46.45	49.64	52.51	56.08
			Input	5.45	5.51	5.48	5.30	5.12	5.17	5.20	4.63
56	59F(15C)	F(10C)	TH	28.15	36.85	40.89	46.69	47.34	58.07	61.78	63.12
			SC	28.15	36.85	40.89	46.69	47.34	58.07	61.78	63.12
			Input	5.42	5.61	5.45	5.15	5.06	5.45	5.62	5.08
	F(18C)	54F(12C)	TH	27.14	35.62	41.46	46.47	48.11	54.76	61.33	62.27
			SC	27.14	35.62	41.46	46.47	48.11	54.76	61.33	62.27
			Input	5.55	5.66	5.41	5.18	5.02	5.52	5.85	5.27
	70F(21C)	59F(15C)	TH	26.85	33.44	42.62	46.34	47.83	54.25	60.74	61.86
			SC	26.85	33.44	42.62	46.34	47.83	54.25	60.74	61.86
			Input	5.60	5.75	5.57	5.44	5.18	5.73	5.94	5.50
	75F(24C)	63F(17C)	TH	23.64	29.48	42.12	45.86	44.78	54.08	58.79	60.74
			SC	23.64	29.48	42.12	45.86	44.78	54.08	58.79	60.74
			Input	5.72	5.81	5.73	5.62	5.18	5.95	6.19	5.68

LEGEND
DB --- Dry Bulb
WB --- Wet Bulb
TH --- Total Net Heating Capacity (1000 Btu/hour)
SC --- Sensible Capacity (1000 Btu/hour)
Input --- Total Power (kW)

PIPING REQUIREMENTS

SYSTEM SIZE			18	24	30	36	42	48	56
Piping	Min. Piping Length	ft	10	10	10	10	10	10	10
	Standard Piping Length	ft	32	98	131.2	131.2	131.2	98.42	98.42
	Max. outdoor−indoor height difference	ft	33	33	49.2	49.2	49.2	98.42	98.42
	Max. height distance between indoor and indoor	ft	33	33	24.6	24.6	24.6	49.21	49.21
	Max. height distance between indoor and outdoor and indoor	ft	32	32	49.2	49.2	49.2	98.42	98.42
	Max. height distance between indoor and outdoor and outdoor up	ft	33	33	49.2	49.2	49.2	98.42	98.42
	Max. equivalent piping outdoor to last indoor	ft	33	65	82	82	82	229	229
	Max. Piping Length with no additional refrigerant charge	ft	32	98	131.2	131.2	131.2	98.42	98.42
	Max. Piping Length	ft	65	196	229.7	246	246	442.9	475.7
	Gas Pipe (size − connection type)	in	3/8	3/8	3/8	3/8	3/8	5/8	5/8
	Liquid Pipe (size − connection type)	in	1/4	1/4	1/4	1/4	1/4	3/8	3/8
Refrigerant	Refrigerant Type		R−410A	R−410A	R−410A	R−410A	R−410A	R−410A	R−410A
	Heat Pump Models Charge Amount	Lbs	3.53	4.85	6.17	8.05	8.05	10.91	10.91

APPLICATION DATA

UNIT SELECTION

When selecting a variable speed system match the system capacity range to the anticipated load range. Since a variable speed system can accommodate a wide range of loads it is important to understand the percentage of time that the system will be required to run at the both the maximum and the minimum load points. This differential is most evident when a residential application is compared with a commercial application.

Generally there will be more load diversification in the residential application (shifting from low load to high load).

The commercial application will tend to be more steady during the normal day time hours, and will go to low load levels after normal business hours. If it is anticipated that the system will be required to run at the maximum load point for the majority of the time, the next larger system capacity should be selected.

The Application Table is a guideline for selecting the proper size for the application.

APPLICATION DATA 2 - 6 ZONE

Outdoor Unit Model 538KEQ	2–Zone	3–Zone	4–Zone	5–Zone	6–Zone
018RCGA	9+9				
	9+12				
024RDGA	9+9	9+9+9			
	9+12	9+9+12			
	9+18	9+9+18			
	12+12	9+12+12			
	12+18	12+12+12			
	18+18				
030RFGA	9+9	9+9+9	9+9+9+9		
	9+12	9+9+12	9+9+9+12		
	9+18	9+9+18	9+9+12+12		
	9+21	9+9+21			
	9+24	9+9+24			
	12+12	9+12+12			
	12+18	9+12+18			
	12+21	9+12+21			
	12+24	12+12+12			
	18+18	12+12+18			
	18+21				
	18+24				
	21+21				
036RGGA	9+9	9+9+9	9+9+9+9	9+9+9+9+9	
	9+12	9+9+12	9+9+9+12	9+9+9+9+12	
	9+18	9+9+18	9+9+9+18		
	9+21	9+9+21	9+9+9+21		
	9+24	9+9+24	9+9+12+12		
	12+12	9+12+12	9+9+12+18		
	12+18	9+12+18	9+12+12+12		
	12+21	9+12+21	12+12+12+12		
	12+24	9+12+24			
	18+18	9+18+18			
	18+21	9+18+21			
	18+24	12+12+12			
	21+21	12+12+18			
	21+24	12+12+21			
	24+24	12+12+24			
		12+18+18			
042RGGA	9+9	9+9+9	9+9+9+9	9+9+9+9+9	
	9+12	9+9+12	9+9+9+12	9+9+9+9+12	
	9+18	9+9+18	9+9+9+18		
	9+21	9+9+21	9+9+9+21		
	9+24	9+9+24	9+9+12+12		
	12+12	9+12+12	9+9+12+18		
	12+18	9+12+18	9+12+12+12		
	12+21	9+12+21	9+12+12+18		
	12+24	9+12+24	12+12+12+12		
	18+18	9+18+18			
	18+21	9+18+21			
	18+24	9+21+21			
	21+21	12+12+12			
	21+24	12+12+18			
	24+24	12+12+21			
		12+12+24			
		12+18+18			

APPLICATION DATA 2 - 6 ZONE (CONTINUED)

Outdoor Unit Model 538KEQ	2–Zone	3–Zone		4–Zone			5–Zone			6–Zone	
048RKGA	9+18	9+9+9	12+12+21	9+9+9+9	9+12+12+24	12+12+18+21	9+9+9+9+9	9+9+9+18+24	9+12+12+12+12	9+9+9+9+9+9	
	9+21	9+9+12	12+12+24	9+9+9+12	9+12+18+18	12+12+18+24	9+9+9+9+12	9+9+9+21+21	9+12+12+12+18	9+9+9+9+9+12	
	9+24	9+9+18	12+18+18	9+9+9+18	9+12+18+21	12+12+21+21	9+9+9+9+18	9+9+9+21+24	9+12+12+12+21	9+9+9+9+9+18	
	12+12	9+9+21	12+18+21	9+9+9+21	9+12+18+24	12+12+24+24	9+9+9+9+21	9+9+12+12+12	9+12+12+12+24	9+9+9+9+9+21	
	12+18	9+9+24	12+18+24	9+9+9+24	9+12+21+21	12+18+18+18	9+9+9+9+24	9+9+12+12+18	9+12+12+18+18	9+9+9+9+9+24	
	12+21	9+12+12	12+21+21	9+9+12+12	9+12+21+24	12+18+18+21	9+9+9+12+12	9+9+12+12+21	9+12+12+18+21	9+9+9+9+12+12	
	12+24	9+12+18	12+21+24	9+9+12+18	9+12+24+24	12+18+18+24	9+9+9+12+18	9+9+12+12+24	12+12+12+12+12	9+9+9+9+12+18	
	18+18	9+12+21	12+24+24	9+9+12+21	9+18+18+18	12+18+21+21	9+9+9+12+21	9+9+12+18+18	12+12+12+12+18	9+9+9+9+12+21	
	18+21	9+12+24	18+18+18	9+9+12+24	9+18+18+21		9+9+9+12+24	9+9+12+18+21	12+12+12+12+21	9+9+9+9+12+24	
	18+24	9+18+18	18+18+21	9+9+18+18	9+18+18+24		9+9+9+18+18	9+9+12+18+24	12+12+12+12+24	9+9+9+12+12+12	
	21+21	9+18+21	18+18+24	9+9+18+21	9+18+21+21		9+9+9+18+21	9+9+12+21+21	12+12+12+18+18	9+9+9+12+12+18	
	21+24	9+18+24	18+21+21	9+9+18+24	9+18+21+24					9+9+9+12+12+21	
	24+24	9+21+21	18+21+24	9+9+21+21	12+12+12+12					9+9+12+12+12+12	
		9+21+24	21+21+21	9+9+21+24	12+12+12+18					9+9+12+12+12+18	
		9+24+24	21+21+24	9+12+12+12	12+12+12+21						
		12+12+12	21+24+24	9+12+12+18	12+12+12+24						
		12+12+18	24+24+24	9+12+12+21	12+12+18+18						
056RLGA	9+18	9+9+12	12+12+24	9+9+9+9	9+12+18+21	12+12+18+21	9+9+9+9+9	9+9+12+12+24	9+12+12+18+21	9+9+9+9+9+9	9+9+12+12+12+21
	9+21	9+9+18	12+18+18	9+9+9+12	9+12+18+24	12+12+18+24	9+9+9+9+12	9+9+12+18+18	9+12+12+18+24	9+9+9+9+9+12	9+9+12+12+12+24
	9+24	9+9+21	12+18+21	9+9+9+18	9+12+21+21	12+12+21+21	9+9+9+9+18	9+9+12+18+21	9+12+12+21+21	9+9+9+9+9+18	9+9+12+12+18+18
	12+18	9+9+24	12+18+24	9+9+9+21	9+12+21+24	12+12+21+24	9+9+9+9+21	9+9+12+18+24	9+12+12+21+24	9+9+9+9+9+21	9+9+12+12+18+21
	12+21	9+12+12	12+21+21	9+9+9+24	9+12+24+24	12+12+24+24	9+9+9+9+24	9+9+12+21+21	9+12+12+24+24	9+9+9+9+9+24	9+12+12+12+12+12
	12+24	9+12+18	12+21+24	9+9+12+12	9+18+18+18	12+18+18+18	9+9+9+12+12	9+9+12+21+24	12+12+12+12+12	9+9+9+9+12+12	9+12+12+12+12+18
	18+18	9+12+21	12+24+24	9+9+12+18	9+18+18+21	12+18+18+21	9+9+9+12+18	9+9+12+24+24	12+12+12+12+18	9+9+9+9+12+18	9+12+12+12+12+21
	18+21	9+12+24	18+18+18	9+9+12+21	9+18+18+24	12+18+18+24	9+9+9+12+21	9+9+18+18+18	12+12+12+12+21	9+9+9+9+12+21	9+12+12+12+12+24
	18+24	9+18+18	18+18+21	9+9+18+21	9+18+21+24	12+18+21+21	9+9+9+12+24	9+9+18+18+21	12+12+12+12+24	9+9+9+9+12+24	9+12+12+12+18+18
	21+21	9+18+21	18+18+24	9+9+18+24	9+18+21+24	12+18+21+24	9+9+9+18+18	9+9+18+18+24	12+12+12+18+18	9+9+9+9+18+18	12+12+12+12+12+12
	21+24	9+18+24	18+21+21	9+9+18+21	9+18+24+24	12+18+24+24	9+9+9+18+21	9+9+18+21+21	12+12+12+18+21	9+9+9+9+18+21	12+12+12+12+12+18
	24+24	9+21+21	18+21+24	9+9+18+24	9+21+21+21	12+21+21+21	9+9+9+18+24	9+9+18+21+24	12+12+12+18+24	9+9+9+9+18+24	12+12+12+12+12+21
		9+21+24	18+24+24	9+9+21+21	9+21+21+24	12+21+21+24	9+9+9+21+21	9+12+12+12+12	12+12+12+21+21		
		9+24+24	21+21+21	9+9+21+24	9+21+24+24	12+21+24+24	9+9+9+21+24	9+12+12+12+18	12+12+12+21+24		
		12+12+12	21+21+24	9+9+24+24	9+24+24+24	18+18+18+18	9+9+12+12+12	9+12+12+12+21	12+12+18+18+18		
		12+12+18	21+24+24	9+12+12+12	12+12+12+12	18+18+18+21	9+9+12+12+18	9+12+12+12+24	12+12+18+18+21		
		12+12+21	24+24+24	9+12+12+18	12+12+12+18	18+18+18+24	9+9+12+12+21	9+12+12+18+18			
				9+12+12+21	12+12+12+21	18+18+21+21					
				9+12+12+24	12+12+12+24	18+18+21+24					
				9+12+18+18	12+12+18+18	18+21+21+21					

APPLICATION DATA 7-9 ZONE

Outdoor Unit Model 538KEQ	7–Zone	8–Zone	9–Zone
018RCGA			
024RDGA			
030RFGA			
036RGGA			
042RGGA			
048RKGA	9+9+9+9+9+9+9	9+9+9+9+9+9+9+9	
	9+9+9+9+9+9+12		
	9+9+9+9+9+9+18		
	9+9+9+9+9+12+12		
	9+9+9+9+12+12+12		
056RLGA	9+9+9+9+9+9+9	9+9+9+9+9+9+9+9	9+9+9+9+9+9+9+9+9
	9+9+9+9+9+9+12	9+9+9+9+9+9+9+12	
	9+9+9+9+9+9+18	9+9+9+9+9+9+9+18	
	9+9+9+9+9+9+21	9+9+9+9+9+9+12+12	
	9+9+9+9+9+9+24	9+9+9+9+9+12+12+12	
	9+9+9+9+9+12+12		
	9+9+9+9+9+12+18		
	9+9+9+9+9+12+21		
	9+9+9+9+9+12+24		
	9+9+9+9+9+18+18		
	9+9+9+9+12+12+12		
	9+9+9+9+12+12+18		
	9+9+9+9+12+12+21		
	9+9+9+12+12+12+12		
	9+9+9+12+12+12+18		
	9+9+12+12+12+12+12		
	9+12+12+12+12+12+12		

COMBINATIONS CAPACITY

Outdoor Unit Size	Combinations	# of Zones	Cooling Capacity (Btu/h)									Heating Capacity (Btu/h)								
			Zone 1	Zone 2	Zone 3	Zone 4	Zone 5	Zone 6	Zone 7	Zone 8	Zone 9	Zone 1	Zone 2	Zone 3	Zone 4	Zone 5	Zone 6	Zone 7	Zone 8	Zone 9
18	9K+9K	Dual	9,000	9,000								9,500	9,500							
	9K+12K		9,000	12,000								9,500	13,000							
24	9K+9K	Dual	9,000	9,000								9,500	9,500							
	9K+12K		9,000	12,000								9,500	13,000							
	9K+18K		8,400	16,600								9,000	18,000							
	12K+12K		12,000	12,000								13,000	13,000							
	12K+18K		10,000	15,000								11,200	16,800							
	18K+18K		12,750	12,750								14,250	14,250							
	9K+9K+9K	Triple	8,667	8,667	8,667							9,667	9,667	9,667						
	9K+9K+12K		8,000	8,000	10,000							9,000	9,000	11,000						
	9K+9K+18K		7,000	7,000	12,000							6,000	6,000	17,000						
	9K+12K+12K		6,000	10,000	10,000							6,000	11,500	11,500						
	12K+12K+12K		8,667	8,667	8,667							9,667	9,667	9,667						
30	9+9	Dual	9,000	9,000								9,500	9,500							
	9+12		9,000	12,000								9,500	13,000							
	9+18		7,650	15,300								8,460	16,920							
	9+21		7,560	18,060								8,370	19,950							
	9+24		7,380	20,400								8,280	22,560							
	12+12		12,000	12,000								13,000	13,000							
	12+18		10,200	15,300								11,280	16,920							
	12+21		9,960	17,220								10,800	18,900							
	12+24		9,420	19,440								9,900	20,000							
	18+18		14,180	14,180								15,100	15,100							
	18+21		13,200	15,700								14,580	17,000							
	18+24		12,000	17,100								13,300	18,500							
	21+21		14,450	14,450								15,800	15,800							
	9+9+9	Triple	8,500	8,500	8,500							9,500	9,500	9,500						
	9+9+12		8,000	8,000	10,200							8,800	8,800	11,200						
	9+9+18		7,650	7,650	14,500							7,900	7,900	15,300						
	9+9+21		7,000	7,000	16,000							7,200	7,200	16,800						
	9+9+24		6,300	6,300	17,200							6,750	6,750	18,000						
	9+12+12		8,200	10,000	10,000							8,500	10,200	10,200						
	9+12+18		7,000	8,600	14,000							7,200	9,000	14,500						
	9+12+21		6,000	7,500	15,200							6,400	8,500	15,750						
	12+12+12		9,500	9,500	9,500							9,900	9,900	9,900						
	12+12+18		8,600	8,600	13,000							9,000	9,000	13,500						
	9K+9K+9K+9K	Quad	7,400	7,400	7,400	7,400						7,700	7,700	7,700	7,700					
	9K+9K+9K+12K		7,100	7,100	7,100	8,400						7,300	7,300	7,300	9,400					
	9K+9K+12K+12K		6,800	6,800	8,000	8,000						6,800	6,800	9,000	9,000					
36	9+9	Dual	9,000	9,000								9,500	9,500							
	9+12		9,000	12,000								9,500	13,000							
	9+18		8,000	17,500								9,300	18,500							
	9+21		7,700	18,300								8,400	19,500							
	9+24		7,000	19,300								8,000	21,600							
	12+12		12,000	12,000								13,000	13,000							
	12+18		11,400	17,000								12,000	17,500							
	12+21		10,500	18,500								11,500	19,700							
	12+24		10,000	20,000								11,200	22,000							
	18+18		15,300	15,300								17,500	17,500							
	18+21		14,700	17,200								16,000	19,500							
	18+24		14,200	18,900								15,000	21,000							
	21+21		16,700	16,700								18,100	18,100							
	21+24		15,500	17,700								17,750	19,000							
	24+24		16,800	16,800								19,000	19,000							

COMBINATIONS CAPACITY (CONTINUED)

Outdoor Unit Size	Combinations	# of Zones	Cooling Capacity (Btu/h)									Heating Capacity (Btu/h)								
			Zone 1	Zone 2	Zone 3	Zone 4	Zone 5	Zone 6	Zone 7	Zone 8	Zone 9	Zone 1	Zone 2	Zone 3	Zone 4	Zone 5	Zone 6	Zone 7	Zone 8	Zone 9
36	9+9+9	Triple	8,200	8,200	8,200							9,000	9,000	9,000						
	9+9+12		7,500	7,500	9,900							9,000	9,000	10,800						
	9+9+18		7,200	7,200	15,300							8,800	8,800	17,400						
	9+9+21		7,000	7,000	16,400							8,380	8,380	19,300						
	9+9+24		6,600	6,600	17,700							7,800	7,800	21,000						
	9+12+12		8,000	10,800	10,800							9,000	12,000	12,000						
	9+12+18		7,400	9,800	14,700							8,650	11,200	15,300						
	9+12+21		7,000	9,360	16,400							8,200	10,400	18,500						
	9+12+24		6,800	9,100	18,200							7,900	9,240	20,500						
	9+18+18		6,500	13,700	13,700							7,560	15,200	15,200						
	9+18+21		6,390	12,780	14,900							7,200	14,500	16,800						
	12+12+12		10,400	10,400	10,400							12,000	12,000	12,000						
	12+12+18		9,360	9,360	14,000							10,600	10,600	16,000						
	12+12+21		8,760	8,760	15,330							9,960	9,960	17,800						
	12+12+24		8,300	8,300	16,300							9,500	9,500	19,000						
	12+18+18		8,160	12,300	12,300							9,300	14,500	14,500						
	9+9+9+9	Quad	8,500	8,500	8,500	8,500						10,500	10,500	10,500	10,500					
	9+9+9+12		7,830	7,830	7,830	10,800						9,600	9,600	9,600	13,200					
	9+9+9+18		6,824	6,824	6,824	13,600						8,400	8,400	8,400	16,740					
	9+9+9+21		6,450	6,450	6,450	14,900						7,920	7,920	7,920	18,480					
	9+9+12+12		7,300	7,300	9,720	9,720						9,000	9,000	12,000	12,000					
	9+9+12+18		6,500	6,500	8,640	12,960						8,000	8,000	10,680	16,000					
	9+12+12+12		6,840	9,200	9,200	9,200						8,100	10,900	10,900	10,900					
	12+12+12+12		8,760	8,760	8,760	8,760						10,680	10,680	10,680	10,680					
	9+9+9+9+9	Penta	6,900	6,900	6,900	6,900	6,900					8,550	8,550	8,550	8,550	8,550				
	9+9+9+9+12		6,500	6,500	6,500	6,500	6,640					7,920	7,920	7,920	7,920	10,560				
42	9+12	Dual	9,000	12,000								9,500	13,000							
	9+18		8,000	17,500								9,300	18,500							
	9+21		7,700	18,300								8,400	19,500							
	9+24		7,000	19,300								8,000	21,600							
	12+12		12,000	12,000								13,000	13,000							
	12+18		11,400	17,000								12,000	17,500							
	12+21		10,500	19,500								11,500	19,800							
	12+24		10,000	22,700								11,200	23,600							
	18+18		15,840	15,840								17,400	17,300							
	18+21		14,900	17,200								16,560	19,270							
	18+24		14,240	18,950								16,200	21,600							
	21+21		16,900	16,900								18,920	18,920							
	21+24		15,830	18,520								17,740	20,250							
	24+24		17,560	17,560								19,200	19,200							
	9+9+9	Triple	8,200	8,200	8,200							9,000	9,000	9,000						
	9+9+12		7,500	7,500	9,900							9,000	9,000	10,800						
	9+9+18		7,200	7,200	15,800							8,800	8,800	17,400						
	9+9+21		7,000	7,000	18,400							8,380	8,380	19,500						
	9+9+24		6,600	6,600	21,700							7,900	7,900	23,800						
	9+12+12		8,000	10,800	10,800							9,000	12,000	12,000						
	9+12+18		7,400	9,800	15,700							8,650	11,200	16,300						
	9+12+21		7,100	9,460	18,400							8,550	10,900	20,500						
	9+12+24		6,800	9,100	20,200							7,900	10,240	22,800						
	9+18+18		6,500	14,800	14,800							7,560	16,730	16,730						
	9+18+21		6,390	14,280	16,330							7,200	16,100	18,800						
	9+21+21		6,120	15,940	15,940							6,900	18,300	18,300						
	12+12+12		10,400	10,400	10,400							12,000	12,000	12,000						
	12+12+18		9,960	9,960	15,180							11,400	11,400	17,300						

COMBINATIONS CAPACITY (CONTINUED)

Outdoor Unit Size	Combinations	# of Zones	Cooling Capacity (Btu/h)									Heating Capacity (Btu/h)								
			Zone 1	Zone 2	Zone 3	Zone 4	Zone 5	Zone 6	Zone 7	Zone 8	Zone 9	Zone 1	Zone 2	Zone 3	Zone 4	Zone 5	Zone 6	Zone 7	Zone 8	Zone 9
42	12+12+21	Triple	9,760	9,760	16,980							11,060	11,060	19,380						
	12+12+24		9,300	9,300	18,900							10,620	10,620	21,260						
	12+18+18		8,900	14,300	14,300							10,130	16,185	16,185						
	12+18+21		8,460	13,500	16,540							9,530	15,300	19,000						
	9+9+9+9	Quad	8,870	8,870	8,870	8,870						11,000	11,000	11,000	11,000					
	9+9+9+12		8,460	8,460	8,460	11,110						10,260	10,260	10,260	13,420					
	9+9+9+18		7,650	7,650	7,650	15,400						8,920	8,920	8,920	18,200					
	9+9+9+21		7,290	7,290	7,290	17,130						8,460	8,460	13,690	13,690					
	9+9+12+12		8,300	8,300	11,200	11,200						9,630	9,630	12,870	12,870					
	9+9+12+18		7,470	7,470	9,960	14,940						8,550	8,550	11,400	17,100					
	9+12+12+12		7,000	10,760	10,760	10,760						8,120	12,390	12,390	12,390					
	9+12+12+18		6,760	9,600	9,600	14,050						8,010	10,680	10,680	16,200					
	12+12+12+12		9,950	9,950	9,950	9,950						11,470	11,470	11,470	11,470					
	9+9+9+9+9	Penta	7,920	7,920	7,920	7,920	7,920					9,100	9,100	9,100	9,100	9,100				
	9+9+9+9+12		7,430	7,430	7,430	7,430	9,980					8,540	8,540	8,540	8,540	11,480				
48	9+18	Dual	8,506	16,719								9,103	18,452							
	9+21		8,506	20,145								9,103	21,943							
	9+24		8,506	23,086								9,103	24,620							
	12+12		10,236	10,236								12,637	12,637							
	12+18		10,236	16,207								12,637	18,452							
	12+21		10,236	20,145								12,637	21,943							
	12+24		10,236	23,086								12,637	24,620							
	18+18		16,207	16,207								18,452	18,452							
	18+21		16,207	20,145								18,452	21,943							
	18+24		16,207	23,086								18,452	24,620							
	21+21		20,145	20,145								21,943	21,943							
	21+24		20,145	23,086								21,943	24,620							
	24+24		23,086	23,086								24,620	24,620							
	9+9+9	Triple	8,189	8,189	8,189							9,547	9,547	9,547						
	9+9+12		8,189	8,189	11,771							9,547	9,547	12,637						
	9+9+18		8,189	8,189	16,157							9,547	9,547	18,452						
	9+9+21		8,189	8,189	16,463							9,547	9,547	21,943						
	9+9+24		8,189	8,189	17,084							9,547	9,547	24,620						
	9+12+12		8,189	11,771	11,771							9,547	12,637	12,637						
	9+12+18		8,189	11,771	16,157							9,547	12,637	18,452						
	9+12+21		8,189	11,771	16,463							9,547	12,637	21,943						
	9+12+24		8,189	11,771	17,084							9,547	12,637	24,620						
	9+18+18		8,189	16,157	16,157							9,547	18,452	18,452						
	9+18+21		8,189	16,157	16,463							9,547	18,452	21,943						
	9+18+24		8,189	16,157	17,084							9,547	18,452	24,620						
	9+21+21		8,189	16,463	16,463							9,547	21,943	21,943						
	9+21+24		8,189	16,463	16,463							9,547	21,943	24,620						
	9+24+24		8,189	17,084	17,084							9,547	24,620	24,620						
	12+12+12		11,771	11,771	11,771							12,637	12,637	12,637						
	12+12+18		11,771	11,771	16,157							12,637	12,637	18,452						
	12+12+21		11,771	11,771	16,463							12,637	12,637	21,943						
	12+12+24		11,771	11,771	17,084							12,637	12,637	24,620						
	12+18+18		11,771	16,157	16,157							12,637	18,452	18,452						
	12+18+21		11,771	16,157	16,463							12,637	18,452	21,943						
	12+18+24		11,771	16,157	17,084							12,637	18,452	24,620						
	12+21+21		11,771	16,463	16,463							12,637	21,943	21,943						
	12+21+24		11,771	16,463	17,084							12,637	21,943	24,620						
	12+24+24		11,771	17,084	17,084							12,637	24,620	24,620						
	18+18+18		16,157	16,157	16,157							17,139	17,139	17,139						

COMBINATIONS CAPACITY (CONTINUED)

Outdoor Unit Size	Combinations	# of Zones	Cooling Capacity (Btu/h)									Heating Capacity (Btu/h)								
			Zone 1	Zone 2	Zone 3	Zone 4	Zone 5	Zone 6	Zone 7	Zone 8	Zone 9	Zone 1	Zone 2	Zone 3	Zone 4	Zone 5	Zone 6	Zone 7	Zone 8	Zone 9
48	18+18+21	Triple	16,157	16,157	16,463							17,139	17,139	20,634						
	18+18+24		16,157	16,157	17,084							17,139	17,139	23,351						
	18+21+21		16,157	16,463	16,463							17,139	20,634	20,634						
	18+21+24		16,157	16,463	17,084							17,139	20,634	23,351						
	21+21+21		16,463	16,463	16,463							19,438	19,438	19,438						
	21+21+24		16,463	16,463	17,084							19,438	19,438	21,370						
	21+24+24		16,463	17,084	17,084							19,438	20,491	20,491						
	24+24+24		17,084	17,084	17,084							20,491	20,491	20,491						
	9+9+9+9	Quad	8,674	8,674	8,674	8,674						9,547	9,547	9,547	9,547					
	9+9+9+12		8,674	8,674	8,674	11,974						9,547	9,547	9,547	12,162					
	9+9+9+18		8,674	8,674	8,674	17,974						9,547	9,547	9,547	17,623					
	9+9+9+21		8,674	8,674	8,674	19,631						9,547	9,547	9,547	20,763					
	9+9+9+24		8,674	8,674	8,674	22,495						9,547	9,547	9,547	23,174					
	9+9+12+12		8,135	8,135	11,874	11,874						9,547	9,547	12,162	12,162					
	9+9+12+18		8,135	8,135	11,674	17,549						9,547	9,547	12,162	17,623					
	9+9+12+21		8,135	8,135	11,674	17,549						9,547	9,547	12,162	20,763					
	9+9+12+24		8,135	8,135	11,674	20,530						9,547	9,547	12,162	23,174					
	9+9+18+18		8,135	8,135	17,374	17,374						9,547	9,547	17,623	17,623					
	9+9+18+21		8,135	8,135	17,374	17,549						9,547	9,547	17,623	20,763					
	9+9+18+24		8,135	8,135	17,374	20,530						9,547	9,547	17,623	23,174					
	9+9+21+21		8,135	8,135	20,530	20,530						9,547	9,547	20,763	20,763					
	9+9+21+24		8,135	8,135	20,530	22,530						9,547	9,547	20,763	21,532					
	9+12+12+12		8,135	9,836	9,836	9,836						9,067	12,896	12,896	12,896					
	9+12+12+18		8,135	9,836	9,836	14,263						9,067	12,896	12,896	17,623					
	9+12+12+21		8,135	9,836	9,836	17,834						9,067	12,896	12,896	21,532					
	9+12+12+24		8,135	9,836	9,836	19,769						9,067	12,896	12,896	23,174					
	9+12+18+18		8,135	9,836	14,263	14,263						9,067	12,896	17,623	17,623					
	9+12+18+21		8,135	9,836	14,263	17,334						9,067	12,896	17,623	20,591					
	9+12+18+24		8,135	9,836	13,963	19,469						9,067	12,428	17,123	21,856					
	9+12+21+21		8,135	9,836	17,134	17,134						8,867	12,028	19,591	19,591					
	9+12+21+24		8,135	9,836	17,134	19,469						8,867	12,028	19,591	21,856					
	9+12+24+24		8,135	9,836	19,469	19,469						8,867	11,096	21,413	21,413					
	9+18+18+18		8,135	13,963	13,963	13,963						8,583	16,223	16,223	16,223					
	9+18+18+21		8,135	13,963	13,963	17,134						8,583	16,223	16,223	20,591					
	9+18+18+24		8,135	13,963	13,963	19,469						8,583	16,223	16,223	21,413					
	9+18+21+21		8,135	13,963	17,134	17,134						8,583	16,223	18,223	18,223					
	9+18+21+24		8,135	13,963	17,134	19,469						8,106	15,892	17,952	20,432					
	12+12+12+12		11,674	11,674	11,674	11,474						12,028	12,028	12,028	12,028					
	12+12+12+18		10,824	10,824	10,824	13,963						12,028	12,028	12,028	18,223					
	12+12+12+21		9,762	9,762	9,762	17,134						12,028	12,028	12,028	20,374					
	12+12+12+24		9,162	9,162	9,162	19,469						11,783	11,783	11,783	21,413					
	12+12+18+18		8,836	8,836	14,463	14,463						11,783	11,783	17,496	17,496					
	12+12+18+21		8,836	8,836	14,463	15,134						11,783	11,783	17,496	20,374					
	12+12+18+24		8,836	8,836	13,463	16,469						11,783	11,783	17,496	21,413					
	12+12+21+21		8,836	8,836	15,134	15,134						11,358	11,358	19,664	19,664					
	12+12+24+24		8,836	8,836	16,469	16,469						10,726	10,726	20,374	20,374					
	12+18+18+18		8,836	13,463	14,463	14,463						10,726	17,183	17,183	17,183					
	12+18+18+21		8,836	13,463	13,863	15,734						10,619	16,583	16,583	18,664					
	12+18+18+24		8,836	13,463	13,463	16,469						10,350	16,183	16,183	19,753					
	12+18+21+21		8,836	13,463	15,134	15,134						10,350	16,034	18,291	18,291					
	9+9+9+9+9	Penta	8,615	8,615	8,615	8,615	8,615					9,482	9,482	9,482	9,482	9,482				
	9+9+9+9+12		8,615	8,615	8,615	8,615	8,915					9,482	9,482	9,482	9,482	12,397				
	9+9+9+9+18		8,615	8,615	8,615	8,615	14,417					9,482	9,482	9,482	9,482	18,172				
	9+9+9+9+21		8,615	8,615	8,615	8,615	15,732					9,482	9,482	9,482	9,482	20,571				

COMBINATIONS CAPACITY (CONTINUED)

Outdoor Unit Size	Combinations	# of Zones	Cooling Capacity (Btu/h)									Heating Capacity (Btu/h)								
			Zone 1	Zone 2	Zone 3	Zone 4	Zone 5	Zone 6	Zone 7	Zone 8	Zone 9	Zone 1	Zone 2	Zone 3	Zone 4	Zone 5	Zone 6	Zone 7	Zone 8	Zone 9
48	9+9+9+9+24	Penta	8,615	8,615	8,615	8,615	16,718					9,482	9,482	9,482	9,482	24,372				
	9+9+9+12+12		8,615	8,615	8,615	8,715	8,715					9,108	9,108	9,108	12,469	12,469				
	9+9+9+12+18		8,615	8,615	8,615	8,715	13,328					9,108	9,108	9,108	12,469	18,472				
	9+9+9+12+21		8,615	8,615	8,615	8,715	15,261					9,108	9,108	9,108	12,469	21,470				
	9+9+9+12+24		8,615	8,615	8,615	8,715	16,643					8,752	8,752	8,752	11,453	23,759				
	9+9+9+18+18		8,615	8,615	8,615	13,426	14,417					8,752	8,752	8,752	17,642	17,642				
	9+9+9+18+21		8,615	8,615	8,615	13,417	14,861					8,197	8,197	8,197	16,449	19,874				
	9+9+9+18+24		8,243	8,243	8,243	13,217	14,361					8,197	8,197	8,197	16,449	20,471				
	9+9+9+21+21		8,243	8,243	8,243	14,361	14,861					8,197	8,197	8,197	18,357	18,357				
	9+9+9+21+24		8,243	8,243	8,243	14,161	14,961					7,543	7,543	7,543	18,357	20,471				
	9+9+12+12+12		8,615	8,615	8,714	8,714	8,714					9,482	9,482	11,745	11,745	11,745				
	9+9+12+12+18		8,615	8,615	8,714	8,714	14,417					9,482	9,482	11,745	11,745	18,357				
	9+9+12+12+21		8,615	8,615	8,714	8,714	15,829					9,482	9,482	11,745	11,745	19,723				
	9+9+12+12+24		8,615	8,615	8,714	8,714	18,846					8,752	8,752	10,952	10,652	22,736				
	9+9+12+18+18		8,323	8,323	8,524	13,328	13,328					8,752	8,752	10,473	16,817	16,817				
	9+9+12+18+21		8,323	8,323	8,524	13,328	15,246					8,247	8,247	9,645	16,284	19,439				
	9+9+12+18+24		8,323	8,323	8,524	13,328	16,120					8,247	8,247	9,645	16,284	19,672				
	9+9+12+21+21		8,013	8,013	8,224	14,618	14,618					7,864	7,864	9,363	18,357	18,357				
	9+12+12+12+12		8,615	8,915	8,915	8,915	8,915					8,752	10,952	10,952	10,952	10,952				
	9+12+12+12+18		8,615	8,915	8,915	8,915	13,328					8,752	10,952	10,952	10,952	16,817				
	9+12+12+12+21		8,615	8,915	8,915	8,915	15,736					8,752	10,952	10,952	10,952	18,763				
	9+12+12+12+24		8,615	8,915	8,915	8,915	18,462					8,752	10,952	10,952	10,952	20,439				
	9+12+12+18+18		8,323	8,524	8,524	13,328	13,328					8,439	10,364	10,364	16,273	16,273				
	9+12+12+18+21		8,323	8,524	8,524	13,328	15,736					8,197	9,482	9,482	16,273	18,443				
	12+12+12+12+12		9,604	9,604	9,604	9,604	9,604					11,745	11,745	11,745	11,745	11,745				
	12+12+12+12+18		9,604	9,604	9,604	9,604	13,328					10,952	10,952	10,952	10,952	16,817				
	12+12+12+12+21		9,604	9,604	9,604	9,604	14,736					10,364	10,364	10,364	10,364	19,482				
	12+12+12+12+24		9,604	9,604	9,604	9,604	16,472					10,364	10,364	10,364	10,364	20,649				
	12+12+12+18+18		9,604	9,604	9,604	13,147	13,147					9,482	9,482	9,482	16,817	16,817				
	9+9+9+9+9+9	Hexa	8,013	8,013	8,013	8,013	8,013	8,013				9,482	9,482	9,482	9,482	9,482	9,482			
	9+9+9+9+9+12		8,013	8,013	8,013	8,013	8,013	8,413				9,482	9,482	9,482	9,482	9,482	12,367			
	9+9+9+9+9+18		8,013	8,013	8,013	8,013	8,013	13,513				8,629	8,629	8,629	8,629	8,629	17,592			
	9+9+9+9+9+21		7,926	7,926	7,926	7,926	7,926	14,625				8,629	8,629	8,629	8,629	8,629	18,627			
	9+9+9+9+9+24		7,926	7,926	7,926	7,926	7,926	15,640				8,438	8,438	8,438	8,438	8,438	19,720			
	9+9+9+9+12+12		7,926	7,926	7,926	7,926	8,207	8,207				8,876	8,876	8,876	8,876	11,263	11,263			
	9+9+9+9+12+18		7,926	7,926	7,926	7,926	8,207	13,513				8,876	8,876	8,876	8,876	10,682	16,346			
	9+9+9+9+12+21		7,926	7,926	7,926	7,926	8,207	14,625				8,438	8,438	8,438	8,438	9,953	18,473			
	9+9+9+9+12+24		7,926	7,926	7,926	7,926	8,207	15,340				8,142	8,142	8,142	8,142	9,671	19,720			
	9+9+9+12+12+12		7,926	7,926	7,926	8,207	8,207	8,207				8,876	8,876	8,876	11,263	11,263	11,263			
	9+9+9+12+12+18		7,926	7,926	7,926	8,207	8,207	13,256				8,438	8,438	8,438	9,953	9,953	16,346			
	9+9+9+12+12+21		7,926	7,926	7,926	8,207	8,207	14,327				8,438	8,438	8,438	9,953	9,953	17,953			
	9+9+12+12+12+12		7,926	7,926	8,207	8,207	8,207	8,207				8,438	8,438	11,263	11,263	11,263	11,263			
	9+9+12+12+12+18		7,926	7,926	8,207	8,207	8,207	13,256				8,438	8,438	9,953	9,953	9,953	15,472			
	9+9+9+9+9+9+9	Hepta	7,168	7,168	7,168	7,168	7,168	7,168	7,168			8,438	8,438	8,438	8,438	8,438	8,438	8,438		
	9+9+9+9+9+9+12		7,168	7,168	7,168	7,168	7,168	7,168	7,868			8,134	8,134	8,134	8,134	8,134	8,134	10,461		
	9+9+9+9+9+9+18		6,832	6,832	6,832	6,832	6,832	6,832	11,430			7,629	7,629	7,629	7,629	7,629	7,629	15,493		
	9+9+9+9+9+12+12		7,168	7,168	7,168	7,168	7,168	7,868	7,868			7,629	7,629	7,629	7,629	7,629	10,133	10,133		
	9+9+9+9+12+12+12		7,168	7,168	7,168	7,168	7,868	7,868	7,868			7,629	7,629	7,629	7,629	10,133	10,133	10,133		
	9+9+9+9+9+9+9+9	Octa	6,832	6,832	6,832	6,832	6,832	6,832	6,832	6,832		7,629	7,629	7,629	7,629	7,629	7,629	7,629	7,629	
56	9+18	Dual	8,576	17,462								9,176	18,637							
	9+21		8,576	20,456								9,176	21,469							
	9+24		8,576	23,194								9,176	24,573							
	12+18		11,390	17,462								12,379	18,637							
	12+21		11,390	20,456								12,379	21,469							

COMBINATIONS CAPACITY (CONTINUED)

Outdoor Unit Size	Combinations	# of Zones	Cooling Capacity (Btu/h)									Heating Capacity (Btu/h)								
			Zone 1	Zone 2	Zone 3	Zone 4	Zone 5	Zone 6	Zone 7	Zone 8	Zone 9	Zone 1	Zone 2	Zone 3	Zone 4	Zone 5	Zone 6	Zone 7	Zone 8	Zone 9
56	12+24	Dual	11,390	23,194								12,379	24,573							
	18+18		16,728	16,728								18,637	18,637							
	18+21		16,728	20,456								18,637	21,469							
	18+24		16,728	23,194								18,637	24,573							
	21+21		20,456	20,456								21,469	21,469							
	21+24		20,456	23,194								21,469	24,573							
	24+24		23,194	23,194								24,573	24,573							
	9+9+12	Triple	8,576	8,576	11,390							9,176	9,176	12,379						
	9+9+18		8,576	8,576	16,728							9,176	9,176	18,637						
	9+9+21		8,576	8,576	20,456							9,176	9,176	21,469						
	9+9+24		8,576	8,576	23,194							9,176	9,176	24,573						
	9+12+12		8,576	11,390	11,390							9,176	12,379	12,379						
	9+12+18		8,576	11,390	16,728							9,176	12,379	18,637						
	9+12+21		8,576	11,390	20,456							9,176	12,379	21,469						
	9+12+24		8,576	11,390	23,194							9,176	12,379	24,573						
	9+18+18		8,576	16,728	16,728							9,176	18,637	18,637						
	9+18+21		8,576	16,728	20,456							9,176	18,637	21,469						
	9+18+24		8,576	16,728	23,194							9,176	18,637	24,573						
	9+21+21		8,576	20,456	20,456							9,176	21,469	21,469						
	9+21+24		8,576	20,456	23,194							9,176	21,469	24,573						
	9+24+24		8,576	22,684	22,684							9,176	24,573	24,573						
	12+12+12		11,390	11,390	11,390							12,379	12,379	12,379						
	12+12+18		11,390	11,390	16,728							12,379	12,379	18,637						
	12+12+21		11,390	11,390	20,456							12,379	12,379	21,469						
	12+12+24		11,390	11,390	23,194							12,379	12,379	24,573						
	12+18+18		11,390	16,728	16,728							12,379	18,637	18,637						
	12+18+21		11,390	16,728	20,456							12,379	18,637	21,469						
	12+18+24		11,390	16,728	23,194							12,379	18,637	24,573						
	12+21+21		11,390	19,748	19,748							12,379	21,469	21,469						
	12+21+24		11,390	19,748	22,493							12,379	21,469	24,573						
	12+24+24		11,390	22,493	22,493							12,379	24,573	24,573						
	18+18+18		16,728	16,728	16,728							18,637	18,637	18,637						
	18+18+21		16,728	16,728	19,748							18,637	18,637	21,469						
	18+18+24		16,728	16,728	21,720							18,637	18,637	24,573						
	18+21+21		16,728	19,748	19,748							17,693	20,421	20,421						
	18+21+24		16,728	19,748	21,720							17,693	20,421	23,633						
	18+24+24		16,728	21,720	21,720							17,693	23,633	23,633						
	21+21+21		19,253	19,253	19,253							20,421	20,421	20,421						
	21+21+24		18,974	18,974	20,469							20,421	20,421	23,633						
	21+24+24		18,974	20,469	20,469							20,421	23,633	23,633						
	24+24+24		20,469	20,469	20,469							23,154	23,154	23,154						
	9+9+9+9	Quad	8,576	8,576	8,576	8,576						9,176	9,176	9,176	9,176					
	9+9+9+12		8,576	8,576	8,576	11,390						9,176	9,176	9,176	12,379					
	9+9+9+18		8,576	8,576	8,576	16,492						9,176	9,176	9,176	18,637					
	9+9+9+21		8,576	8,576	8,576	19,857						9,176	9,176	9,176	21,469					
	9+9+9+24		8,576	8,576	8,576	20,479						9,176	9,176	9,176	24,573					
	9+9+12+12		8,576	8,576	11,390	11,390						9,176	9,176	12,379	12,379					
	9+9+12+18		8,576	8,576	11,390	16,492						9,176	9,176	12,379	18,637					
	9+9+12+21		8,576	8,576	11,390	19,857						9,176	9,176	12,379	21,469					
	9+9+12+24		8,576	8,576	11,390	20,479						9,176	9,176	12,379	24,573					
	9+9+18+18		8,576	8,576	16,492	16,492						9,176	9,176	18,637	18,637					
	9+9+18+21		8,576	8,576	16,492	19,857						9,176	9,176	18,637	21,469					
	9+9+18+24		8,576	8,576	16,492	20,479						9,176	9,176	18,637	24,573					
	9+9+21+21		8,576	8,576	19,857	19,857						9,176	9,176	21,469	21,469					

COMBINATIONS CAPACITY (CONTINUED)

Outdoor Unit Size	Combinations	# of Zones	Cooling Capacity (Btu/h)									Heating Capacity (Btu/h)								
			Zone 1	Zone 2	Zone 3	Zone 4	Zone 5	Zone 6	Zone 7	Zone 8	Zone 9	Zone 1	Zone 2	Zone 3	Zone 4	Zone 5	Zone 6	Zone 7	Zone 8	Zone 9
56	9+9+21+24	Quad	8,576	8,576	19,857	20,479						9,176	9,176	21,469	24,573					
	9+9+24+24		8,576	8,576	20,479	20,479						9,176	9,176	24,573	24,573					
	9+12+12+12		8,576	11,390	11,390	11,390						9,176	12,379	12,379	12,379					
	9+12+12+18		8,576	11,390	11,390	16,492						9,176	12,379	12,379	18,637					
	9+12+12+21		8,576	11,390	11,390	19,857						9,176	12,379	12,379	21,469					
	9+12+12+24		8,576	11,390	11,390	20,479						9,176	12,379	12,379	24,573					
	9+12+18+18		8,576	11,390	16,492	16,492						9,176	12,379	18,637	18,637					
	9+12+18+21		8,576	11,390	16,492	19,857						9,176	12,379	18,637	21,469					
	9+12+18+24		8,576	11,390	16,492	20,479						9,176	12,379	18,637	24,573					
	9+12+21+21		8,576	11,390	19,857	19,857						9,176	12,379	21,469	21,469					
	9+12+21+24		8,576	11,390	19,857	20,479						9,176	12,379	21,469	24,573					
	9+12+24+24		8,576	11,390	20,479	20,479						9,176	12,379	24,573	24,573					
	9+18+18+18		8,147	15,782	15,782	15,782						8,654	17,325	17,325	17,325					
	9+18+18+21		8,147	15,782	15,782	18,420						8,654	17,325	17,325	20,397					
	9+18+18+24		8,147	15,782	15,782	19,734						8,654	17,325	17,325	22,963					
	9+18+21+21		8,147	15,782	18,420	18,420						8,654	17,325	20,397	20,397					
	9+18+21+24		8,147	15,782	18,420	19,734						8,654	17,325	20,397	21,964					
	9+18+24+24		8,147	15,428	19,073	19,073						8,029	16,758	21,964	21,964					
	9+21+21+21		7,538	17,243	17,243	17,243						8,029	19,469	19,469	19,469					
	9+21+21+24		7,538	17,243	17,243	18,413						8,029	19,469	19,469	20,385					
	9+21+24+24		7,538	17,243	18,413	18,413						8,029	19,469	20,385	20,385					
	9+24+24+24		7,538	18,413	18,413	18,413						8,029	20,385	20,385	20,385					
	12+12+12+12		11,390	11,390	11,390	11,390						12,379	12,379	12,379	12,379					
	12+12+12+18		11,390	11,390	11,390	16,492						12,379	12,379	12,379	17,325					
	12+12+12+21		11,390	11,390	11,390	18,420						12,379	12,379	12,379	20,397					
	12+12+12+24		11,390	11,390	11,390	19,073						12,379	12,379	12,379	21,964					
	12+12+18+18		11,390	11,390	16,492	16,492						12,379	12,379	17,325	17,325					
	12+12+18+21		11,390	11,390	16,492	18,420						12,379	12,379	17,325	20,397					
	12+12+18+24		11,390	11,390	16,492	19,073						12,379	12,379	17,325	21,964					
	12+12+21+21		11,390	11,390	18,420	18,420						11,758	11,758	20,397	20,397					
	12+12+21+24		11,390	11,390	18,420	19,073						11,758	11,758	20,397	21,964					
	12+12+24+24		11,390	11,390	19,073	19,073						11,758	11,758	21,964	21,964					
	9+9+9+9+9	Penta	8,576	8,576	8,576	8,576	8,576					9,176	9,176	9,176	9,176	9,176				
	9+9+9+9+12		8,576	8,576	8,576	8,576	11,390					9,176	9,176	9,176	9,176	12,379				
	9+9+9+9+18		8,576	8,576	8,576	8,576	16,492					9,176	9,176	9,176	9,176	17,325				
	9+9+9+9+21		8,576	8,576	8,576	8,576	19,857					9,176	9,176	9,176	9,176	20,397				
	9+9+9+9+24		8,576	8,576	8,576	8,576	20,479					9,176	9,176	9,176	9,176	21,964				
	9+9+9+12+12		8,576	8,576	8,576	11,390	11,390					9,176	9,176	9,176	12,379	12,379				
	9+9+9+12+18		8,576	8,576	8,576	11,390	16,492					9,176	9,176	9,176	12,379	17,325				
	9+9+9+12+21		8,576	8,576	8,576	11,390	19,857					9,176	9,176	9,176	12,379	20,397				
	9+9+9+12+24		8,576	8,576	8,576	11,390	20,479					9,176	9,176	9,176	12,379	21,964				
	9+9+9+18+18		8,576	8,576	8,576	16,492	16,492					9,176	9,176	9,176	17,325	17,325				
	9+9+9+18+21		8,576	8,576	8,576	16,492	19,857					9,176	9,176	9,176	17,325	20,397				
	9+9+9+18+24		8,576	8,576	8,576	16,492	20,479					9,176	9,176	9,176	17,325	21,964				
	9+9+9+21+21		8,143	8,143	8,143	19,361	19,361					9,176	9,176	9,176	20,397	20,397				
	9+9+9+21+24		8,143	8,143	8,143	19,361	20,263					9,176	9,176	9,176	20,397	21,964				
	9+9+12+12+12		8,143	8,143	11,390	11,390	11,390					9,176	9,176	12,379	12,379	12,379				
	9+9+12+12+18		8,143	8,143	11,390	11,390	16,492					9,176	9,176	12,379	12,379	17,325				
	9+9+12+12+21		8,143	8,143	11,390	11,390	19,857					9,176	9,176	12,379	12,379	20,397				
	9+9+12+12+24		8,143	8,143	11,390	11,390	20,263					9,176	9,176	12,379	12,379	21,964				
	9+9+12+18+18		7,861	7,861	10,682	16,273	16,273					8,564	8,564	11,293	16,945	16,945				
	9+9+12+18+21		7,861	7,861	10,682	16,273	17,896					8,564	8,564	11,293	16,945	19,758				
	9+9+12+18+24		7,861	7,861	10,682	16,273	18,432					8,564	8,564	11,293	16,945	21,964				
	9+9+12+21+21		7,359	7,359	9,738	17,682	17,682					8,564	8,564	11,293	19,758	19,758				

COMBINATIONS CAPACITY (CONTINUED)

Outdoor Unit Size	Combinations	# of Zones	Cooling Capacity (Btu/h)									Heating Capacity (Btu/h)								
			Zone 1	Zone 2	Zone 3	Zone 4	Zone 5	Zone 6	Zone 7	Zone 8	Zone 9	Zone 1	Zone 2	Zone 3	Zone 4	Zone 5	Zone 6	Zone 7	Zone 8	Zone 9
56	9+9+12+21+24	Penta	7,359	7,359	9,738	17,682	18,361					8,275	8,275	10,818	18,966	21,964				
	9+9+12+24+24		7,359	7,359	9,738	18,361	18,361					8,275	8,275	10,818	20,864	20,864				
	9+9+18+18+18		7,359	7,359	14,663	14,663	14,663					8,275	8,275	16,351	16,351	16,351				
	9+9+18+18+21		7,359	7,359	14,663	14,663	16,835					8,275	8,275	15,947	15,947	18,966				
	9+9+18+18+24		7,359	7,359	14,663	14,663	18,361					8,275	8,275	15,947	15,947	20,864				
	9+9+18+21+21		7,182	7,182	14,113	16,235	16,235					7,963	7,963	15,947	18,966	18,966				
	9+9+18+21+24		7,182	7,182	14,113	16,235	18,361					7,963	7,963	15,947	18,241	20,208				
	9+12+12+12+12		8,576	11,390	11,390	11,390	11,390					9,176	12,379	12,379	12,379	12,379				
	9+12+12+12+18		8,576	11,390	11,390	11,390	16,273					9,176	12,379	12,379	12,379	17,325				
	9+12+12+12+21		8,143	10,682	10,682	10,682	18,346					9,176	12,379	12,379	12,379	20,864				
	9+12+12+12+24		8,143	10,682	10,682	10,682	19,651					9,176	12,379	12,379	12,379	21,964				
	9+12+12+18+18		8,143	10,682	10,682	14,663	14,663					8,564	11,293	11,293	16,351	16,351				
	9+12+12+18+21		8,143	10,682	10,682	14,663	16,835					8,564	11,293	11,293	16,351	20,864				
	9+12+12+18+24		7,359	9,738	9,738	14,663	19,651					8,564	11,293	11,293	16,351	21,964				
	9+12+12+21+21		7,359	9,738	9,738	16,835	16,835					8,275	10,818	10,818	18,966	18,966				
	9+12+12+21+24		7,359	9,738	9,738	16,835	19,651					8,275	10,818	10,818	18,966	21,117				
	9+12+12+24+24		7,359	9,357	9,357	18,632	18,632					8,275	10,818	10,818	20,496	20,496				
	12+12+12+12+12		11,390	11,390	11,390	11,390	11,390					11,293	11,293	11,293	11,293	11,293				
	12+12+12+12+18		10,682	10,682	10,682	10,682	14,663					11,293	11,293	11,293	11,293	16,855				
	12+12+12+12+21		10,682	10,682	10,682	10,682	16,835					11,293	11,293	11,293	11,293	19,535				
	12+12+12+12+24		10,682	10,682	10,682	10,682	19,651					11,293	11,293	11,293	11,293	22,314				
	12+12+12+18+18		9,738	9,738	9,738	14,663	14,663					10,879	10,879	10,879	16,228	16,228				
	12+12+12+18+21		9,738	9,738	9,738	14,663	16,835					10,879	10,879	10,879	16,228	18,854				
	12+12+12+18+24		9,738	9,738	9,738	14,663	18,743					10,879	10,879	10,879	16,228	21,030				
	12+12+12+21+21		9,357	9,357	9,357	16,763	16,763					10,492	10,492	10,492	17,950	17,950				
	12+12+12+21+24		9,357	9,357	9,357	16,763	18,743					10,492	10,492	10,492	17,950	20,410				
	12+12+18+18+18		9,357	9,357	14,663	14,663	14,663					10,492	10,492	15,933	15,933	15,933				
	12+12+18+18+21		9,357	9,357	14,138	14,138	16,231					10,492	10,492	15,933	15,933	17,851				
	9+9+9+9+9+9	Hexa	8,576	8,576	8,576	8,576	8,576	8,576				9,176	9,176	9,176	9,176	9,176	9,176			
	9+9+9+9+9+12		8,576	8,576	8,576	8,576	8,576	11,390				9,176	9,176	9,176	9,176	9,176	12,379			
	9+9+9+9+9+18		8,576	8,576	8,576	8,576	8,576	14,663				9,176	9,176	9,176	9,176	9,176	17,325			
	9+9+9+9+9+21		8,576	8,576	8,576	8,576	8,576	16,273				9,176	9,176	9,176	9,176	9,176	18,966			
	9+9+9+9+9+24		8,576	8,576	8,576	8,576	8,576	19,651				9,176	9,176	9,176	9,176	9,176	21,117			
	9+9+9+9+12+12		8,576	8,576	8,576	8,576	11,390	11,390				9,176	9,176	9,176	9,176	12,379	12,379			
	9+9+9+9+12+18		8,576	8,576	8,576	8,576	11,390	14,663				9,176	9,176	9,176	9,176	12,379	17,325			
	9+9+9+9+12+21		8,143	8,143	8,143	8,143	10,682	16,835				8,852	8,852	8,852	8,852	11,763	18,966			
	9+9+9+9+12+24		8,143	8,143	8,143	8,143	10,682	19,651				8,852	8,852	8,852	8,852	11,763	21,117			
	9+9+9+9+18+18		7,359	7,359	7,359	7,359	14,663	14,663				8,634	8,634	8,634	8,634	16,825	16,825			
	9+9+9+9+18+21		7,359	7,359	7,359	7,359	14,663	16,835				8,634	8,634	8,634	8,634	16,825	18,516			
	9+9+9+9+18+24		7,359	7,359	7,359	7,359	14,663	19,238				8,634	8,634	8,634	8,634	16,825	19,341			
	9+9+9+9+21+21		7,359	7,359	7,359	7,359	16,835	16,835				8,274	8,274	8,274	8,274	18,216	18,216			
	9+9+9+9+21+24		7,359	7,359	7,359	7,359	15,963	18,426				8,274	8,274	8,274	8,274	18,216	19,025			
	9+9+9+12+12+12		8,143	8,143	8,143	10,682	10,682	10,682				8,852	8,852	8,852	11,763	11,763	11,763			
	9+9+9+12+12+18		8,143	8,143	8,143	10,682	10,682	14,663				8,852	8,852	8,852	11,763	11,763	17,325			
	9+9+9+12+12+21		8,143	8,143	8,143	10,251	10,251	16,196				8,852	8,852	8,852	11,763	11,763	18,461			
	9+9+9+12+12+24		7,359	7,359	7,359	9,675	9,675	19,238				8,852	8,852	8,852	11,763	11,763	20,175			
	9+9+9+12+18+18		7,359	7,359	7,359	9,675	14,663	14,663				8,395	8,395	8,395	11,089	16,457	16,457			
	9+9+9+12+18+21		7,359	7,359	7,359	9,675	14,663	16,196				7,923	7,923	7,923	10,714	16,054	19,205			
	9+9+9+12+18+24		7,164	7,164	7,164	9,083	14,261	17,826				7,653	7,653	7,653	10,714	15,768	19,851			
	9+9+9+12+21+21		6,924	6,924	6,924	9,083	15,750	15,750				7,653	7,653	7,653	10,313	18,127	18,127			
	9+9+12+12+12+12		8,143	8,143	10,251	10,251	10,251	10,251				8,852	8,852	11,763	11,763	11,763	11,763			
	9+9+12+12+12+18		8,143	8,143	10,251	10,251	10,251	14,663				8,395	8,395	11,354	11,354	11,354	16,457			
	9+9+12+12+12+21		8,143	8,143	10,251	10,251	10,251	16,196				8,395	8,395	11,354	11,354	11,354	18,461			
	9+9+12+12+12+24		7,359	7,359	10,251	10,251	10,251	18,838				8,395	8,395	11,354	11,354	11,354	19,851			

COMBINATIONS CAPACITY (CONTINUED)

Outdoor Unit Size	Combinations	# of Zones	Cooling Capacity (Btu/h)									Heating Capacity (Btu/h)								
			Zone 1	Zone 2	Zone 3	Zone 4	Zone 5	Zone 6	Zone 7	Zone 8	Zone 9	Zone 1	Zone 2	Zone 3	Zone 4	Zone 5	Zone 6	Zone 7	Zone 8	Zone 9
56	9+9+12+12+18+18	Hexa	7,359	7,359	9,675	9,675	14,663	14,663				7,653	7,653	10,714	10,714	16,053	16,053			
	9+9+12+12+18+21		7,359	7,359	9,675	9,675	14,663	15,750				7,653	7,653	10,451	10,451	16,053	18,060			
	9+12+12+12+12+12		7,359	9,675	9,675	9,675	9,675	9,675				7,653	10,451	10,451	10,451	10,451	10,451			
	9+12+12+12+12+18		7,359	9,675	9,675	9,675	9,675	14,459				7,653	10,451	10,451	10,451	10,451	16,053			
	9+12+12+12+12+21		7,359	9,675	9,675	9,675	9,675	16,824				7,653	10,451	10,451	10,451	10,451	18,060			
	9+12+12+12+12+24		7,359	9,675	9,675	9,675	9,675	18,123				7,653	10,451	10,451	10,451	10,451	19,851			
	9+12+12+12+18+18		6,924	9,083	9,083	9,083	14,663	14,663				7,653	10,206	10,206	10,451	15,753	15,753			
	12+12+12+12+12+12		9,083	9,083	9,083	9,083	9,083	9,083				10,206	10,206	10,206	10,206	10,206	10,206			
	12+12+12+12+12+18		9,083	9,083	9,083	9,083	9,083	14,459				10,206	10,206	10,206	10,206	10,206	16,053			
	12+12+12+12+12+21		9,083	9,083	9,083	9,083	9,083	16,824				10,206	10,206	10,206	10,206	10,206	18,060			
	9+9+9+9+9+9	Hepta	7,650	7,650	7,650	7,650	7,650	7,650	7,650			8,852	8,852	8,852	8,852	8,852	8,852	8,852		
	9+9+9+9+9+12		7,650	7,650	7,650	7,650	7,650	7,650	10,263			8,852	8,852	8,852	8,852	8,852	8,852	11,763		
	9+9+9+9+9+18		7,650	7,650	7,650	7,650	7,650	7,650	15,362			8,395	8,395	8,395	8,395	8,395	8,395	16,053		
	9+9+9+9+9+21		7,650	7,650	7,650	7,650	7,650	7,650	17,856			8,395	8,395	8,395	8,395	8,395	8,395	19,335		
	9+9+9+9+9+24		7,550	7,550	7,550	7,550	7,550	7,550	18,920			8,395	8,395	8,395	8,395	8,395	8,395	20,157		
	9+9+9+9+12+12		7,150	7,150	7,150	7,150	7,150	9,654	9,654			8,395	8,395	8,395	8,395	8,395	10,206	10,206		
	9+9+9+9+12+18		7,150	7,150	7,150	7,150	7,150	9,654	14,423			8,395	8,395	8,395	8,395	8,395	10,206	15,074		
	9+9+9+9+12+21		7,150	7,150	7,150	7,150	7,150	9,654	16,827			8,395	8,395	8,395	8,395	8,395	10,206	17,430		
	9+9+9+9+12+24		7,150	7,150	7,150	7,150	7,150	9,654	18,149			8,242	8,242	8,242	8,242	8,242	10,153	19,054		
	9+9+9+9+18+18		7,150	7,150	7,150	7,150	7,150	13,561	13,561			7,628	7,628	7,628	7,628	7,628	15,203	15,203		
	9+9+9+12+12+12		7,150	7,150	7,150	7,150	9,411	9,411	9,411			8,395	8,395	8,395	8,395	10,206	10,206	10,206		
	9+9+9+12+12+18		7,150	7,150	7,150	7,150	9,411	9,411	13,561			8,395	8,395	8,395	8,395	10,206	10,206	15,074		
	9+9+9+12+12+21		7,150	7,150	7,150	7,150	9,411	9,411	16,827			7,961	7,961	7,961	7,961	10,206	10,206	17,430		
	9+9+9+12+12+12		7,150	7,150	7,150	9,411	9,411	9,411	9,411			7,961	7,961	7,961	10,206	10,206	10,206	10,206		
	9+9+9+12+12+18		7,150	7,150	7,150	9,411	9,411	9,411	9,411			7,961	7,961	7,961	10,206	10,206	10,206	15,074		
	9+9+12+12+12+12		7,150	7,150	9,411	9,411	9,411	9,411	9,411			7,961	7,961	10,206	10,206	10,206	10,206	10,206		
	9+12+12+12+12+12		7,150	9,411	9,411	9,411	9,411	9,411	9,411			7,961	10,206	10,206	10,206	10,206	10,206	10,206		
	9+9+9+9+9+9+9	Octa	7,550	7,550	7,550	7,550	7,550	7,550	7,550	7,550		7,961	7,961	7,961	7,961	7,961	7,961	7,961	7,961	
	9+9+9+9+9+9+12		7,550	7,550	7,550	7,550	7,550	7,550	7,550	10,120		7,961	7,961	7,961	7,961	7,961	7,961	7,961	10,206	
	9+9+9+9+9+9+18		7,150	7,150	7,150	7,150	7,150	7,150	7,150	13,561		7,961	7,961	7,961	7,961	7,961	7,961	7,961	15,074	
	9+9+9+9+9+12+12		7,150	7,150	7,150	7,150	7,150	7,150	10,120	10,120		7,961	7,961	7,961	7,961	7,961	7,961	10,206	10,206	
	9+9+9+9+9+12+12+12		7,150	7,150	7,150	7,150	7,150	9,602	9,602	9,602		7,961	7,961	7,961	7,961	7,961	10,206	10,206	10,206	
	9+9+9+9+9+9+9+9	Nona	6,924	6,924	6,924	6,924	6,924	6,924	6,924	6,924	6,924	7,759	7,759	7,759	7,759	7,759	7,759	7,759	7,759	7,759

UNIT MOUNTING (INDOOR)

Mounting Bracket – The fan coil units are furnished with mounting brackets or dedicated mounting holes to hang the unit.

Support – Adequate support must be provided to handle the weight of all fan coils. Refer to the Physical Data section for weights, and the base unit dimensional drawings.

Unit Leveling – For reliable operation, units should be level in all planes.

Clearances – Minimum clearance as shown in Fig. 18-22.

Unit location – Select a location which will provide the best air circulation for the room. These units should be positioned as high to have adequate air circulation. The unit return and discharge should not be obstructed by furniture, curtains, or anything which may cause the unit to short cycle or air to recycle.

UNIT MOUNTING (OUTDOOR)

Support – A location which can bear the weight of outdoor unit. Refer to the Physical Data section for weights, and base dimensional drawings.

Unit Leveling – For reliable operation, units should be level in all planes.

Clearances – Minimum clearances, as shown in Fig. 22, must be provided for airflow. The outdoor units are designed for free-blow applications. Air inlets and outlets should not be restricted.

Unit location – A location which is convenient to installation and not exposed to strong wind.

SYSTEM OPERATING CONDITIONS

Operating range:

Operating Range Min / Max °F (°C)		
	Cooling	Heating
Outdoor DB	18K-42K: 0 / 118 (-18 / 48) 48K-56K: 5 / 118 (-15 / 48)	18K-42K: 0 / 118 (-18 / 48) 48K-56K: 5 / 118 (-15 / 48)
Indoor DB	64 / 95 (18 / 35)	32 / 86 (0 / 30)
Indoor WB	55 (13)	

METERING DEVICES

The outdoor unit has multiple electronic expansion valves to manage the refrigerant flow to the different indoor fan coils connected to that unit.

REFRIGERANT LINES

General Guidelines:

1. The outdoor units are shipped with full charge of R-410A refrigerant. All charges, line sizing, and capacities are based on runs of 25 ft. (7.6 m). For runs over 25 ft. (7.6m), consult long-line section on this page for proper charge adjustments.
2. Refrigerant lines should not be buried in the ground. If it is necessary to bury the lines, not more than 36 inches (914 mm) should be buried. Provide a minimum of 6 inch (152 mm) vertical rise to service valves to prevent refrigerant migration.
3. Both lines must be insulated. Use a minimum of ½-inch (12.7 mm) thick insulation. Closed-cell insulation is recommended in all long-line applications.
4. Special consideration should be given to isolating interconnecting tubing from the building structure. Isolate the tubing so that vibration or noise is not transmitted into the structure.

Long Line Applications:

1. No change in line sizing is required.
2. Add refrigerant per table below.

	Total Line Length ft		Additional Charge, 1/4" Liquid Line / 3/8" Liquid Line, oz/ft. ft (m)								
Unit Size	Min	Max	10 - 32 (3 - 10)	>32 - 66 (10 - 20)	>66 - 98 (20 - 30)	>98 - 131.2 (30 - 40)	>131.2 - 196 (40 - 60)	>196 - 230 (60 - 70)	>230 - 246 (70 - 75)	>246 - 443 (75 - 135)	>443 - 476 (135 - 145)
18	10	66	None	0.20 / 0.20							
24	10	196		None	None	0.20 / 0.20	0.20 / 0.20				
30	10	230		None	None	None	0.24 / 0.58	0.24 / 0.58			
36	10	246		None	None	None	0.24 / 0.58	0.24 / 0.58	0.24 / 0.58		
42	10	246		None	None	None	0.24 / 0.58	0.24 / 0.58	0.24 / 0.58		
48	10	443		None	None	0.24 / 0.58	0.24 / 0.58	0.24 / 0.58	0.24 / 0.58	0.24 / 0.58	
56	10	476		None	None	0.24 / 0.58	0.24 / 0.58	0.24 / 0.58	0.24 / 0.58	0.24 / 0.58	0.24 / 0.58

Additional Refrigerant Calculation Sizes 30K, 36K and 42K:

Sum Total Liquid Pipe 1/4" (ft) x 0.24 + Sum Total Pipe 3/8" (ft) x 0.58 – 31 oz

Additional Refrigerant Calculation Sizes 48K and 56K:

Sum Total Liquid Pipe 1/4" (ft) x 0.24 + Sum Total Pipe 3/8" (ft) x 0.58 – 51.7 oz

NOTE: If the calculation results in a negative number no additional refrigerant is required.

DRAIN CONNECTIONS

Install drains to meet the local sanitation codes. If adequate gravity drainage cannot be provided, a field installed condensate pump accessory should be used. Refer to the Installation Instructions of the condensate pump for detailed specifications. (Condensate Pump built-in on Ducted and Cassette indoor units).

NOTE: The high wall fan coils have internal condensate trap. An external trap is not required.

WIRING

The main power is supplied to the outdoor unit. Four field supplied connecting cables from the outdoor unit to each of the indoor units are: L1, L2, Ground, and S for communication between the outdoor unit and each indoor unit.

CONTROL SYSTEM

The 538KR / 619FB / 619KB / 619KC / 619KD / 619KF unit is equipped with a microprocessor control to operate the system and give optimum levels of comfort and operating efficiency.

There are microprocessor boards and thermistors located in both the indoor and outdoor units. The thermistors monitor the system operation and control the operating mode. The change in the settings or the modes of operation, use the factory supplied wireless remote control.

The 538KR / 619FB / 619KB / 619KC / 619KD / 619KF unit has the following operating modes:

- Fan Only
- Auto
- Heating (on Heat Pumps only)
- Cooling
- Dehumidification (Dry)

FAN ONLY - In Fan Only mode, the system filters and circulates the room air without changing the room air temperature.

AUTO - In Auto mode, the system automatically selects one of the following operating modes: cooling, heating or fan only based on the difference between the room temperature and the set point temperature.

HEATING - In the Heating mode, the system heats and filters room air.

COOLING - When in Cooling mode, the fan runs all the time and the system cools, dries and filters room air.

DEHUMIDIFICATION (DRY) - In Dehumidification (Dry) mode, the system dries, filters and slightly cools room temperature. This mode does not take place of a dehumidifier.

In addition to the above modes that are selected by using the remote control, the unit can run in emergency mode by using a manual button. This mode is used when the remote is misplaced or the batteries in the remote have died. In this mode, the unit runs in AUTO mode with a predetermined set point (76°F/24.4°C).

WIRELESS REMOTE CONTROL

1. A wireless remote control is supplied for system operation.
2. Each battery-operated wireless remote control may be used to control more than one unit.
3. The wireless remote control has a range of 25 ft. (7.6 m).

Fig. 24 – Wireless remote control

WIRED REMOTE CONTROL (STANDARD ON DUCTED AND CASSETTE UNITS)

1. Optional wired remote controller used for system operation of all high-wall, cassette and floor console units.
2. Kit includes a wired remote controller and a connecting cable.
3. Connect with wire terminal between remote controller and indoor unit.
4. Display in °F or °C and temperature increments every 1°F or every 1°C.

Fig. 25 – Wired remote control

SEQUENCE OF OPERATION

Simultaneous heating and cooling is not allowed. At start-up, the first indoor unit to call for operation (heating or cooling) will control from the preset position, the mode of operation for the rest of the indoor units connected to the same outdoor unit. If the other units conflict in mode with the first unit an error message will be displayed on those units.

When a unit is set to COOL, HEAT or DRY mode, the electronic expansion valve is first initialized (closed) and then is opened to a preset position.

Superheat heat for each fan coil (the ones that are energized) is monitored and the position of the electronic expansion valve is adjusted to ensure that each fan coil gets the appropriate amount of refrigerant to maintain the required superheat. After the set point is satisfied and the fan coil shuts off, the electronic expansion valve stays open for a specified time to ensure that system pressures equalize.

When the system is set for COOL, HEAT or DRY mode, the compressor speed is varied by comparing the indoor air temperature with the set point and continuously adjusting the compressor speed (to keep the compressor running as long as possible) in an effort to maintain the greatest comfort possible.

The indoor fan can be running in MANUAL or AUTO mode. When the fan is running in AUTO mode, the speed is determined by comparing the room temperature to the set point.

When the unit goes through the defrost cycle, the indoor fans are de-energized and the refrigerant is circulated through all the fan coils (even if they were off or on standby before the defrost cycle) to maximize the heat transfer surface area available for defrost operation.

AIR FLOW DATA

F High Wall				
System size		**9**	**12**	**18**
SS	CFM	470	480	530
H	CFM	440	450	500
MH	CFM	410	425	470
M	CFM	380	395	440
ML	CFM	355	365	40
L	CFM	295	310	355
SL	CFM	265	275	325

K*B High Wall					
System size		**9**	**12**	**18**	**24**
SS	CFM	430	453	589	647
H	CFM	394	394	512	588
MH	CFM	359	659	465	530
M	CFM	312	312	418	471
ML	CFM	271	271	371	412
L	CFM	241	241	330	353
SL	CFM	224	224	282	294

Cassette				
System size		**12**	**18**	**24**
H	CFM	353	353	694
M	CFM	294	294	559
L	CFM	265	265	500

Console				
System size		**9**	**12**	**18**
SS	CFM	382	441	494
H	CFM	329	382	470
MH	CFM	311	353	423
M	CFM	282	323	382
ML	CFM	253	294	341
L	CFM	217	264	311
SL	CFM	188	205	241

Ducted						
System size		**9**	**12**	**18**	**21**	**24**
H	CFM	264	323	411	588	588
M	CFM	176	235	353	441	441
L	CFM	147	176	294	323	323

Multi Zone Outdoor Unit								
System size		**18**	**24**	**30**	**36**	**42**	**48**	**56**
Voltage		208-230/1/60	208-230/1/60	208-230/1/60	208-230/1/60	208-230/1/60	208-230/1/60	208-230/1/60
H	CFM	1883	2354	2330	4531	4531	3766	4119

SOUND PRESSURE

F High Wall					
System size			**9**	**12**	**18**
Indoor Sound Pressure HP Cooling mode	SH	dBa	41	42	49
	H	dBa	38	39	43
	MH	dBa	34	35	40
	M	dBa	32	33	35
	ML	dBa	30	31	33
	L	dBa	28	29	31
	SL	dBa	26	27	29
Indoor Sound Pressure HP Heating mode	SH	dBa	42	41	47
	H	dBa	41	38	41
	MH	dBa	38	33	39
	M	dBa	36	30	34
	ML	dBa	34	27	30
	L	dBa	25	25	27
	SL	dBa	24	23	25

K*B High Wall						
System size			**9**	**12**	**18**	**24**
Indoor Sound Pressure HP Cooling mode	SS	dBa	42	44	51	52
	H	dBa	38	38	47	49
	MH	dBa	36	36	44	47
	M	dBa	34	34	41	45
	ML	dBa	30	30	38	43
	L	dBa	26	26	36	41
	SL	dBa	23	24	33	38
Indoor Sound Pressure HP Heating mode	SS	dBa	44	45.7	51	50
	H	dBa	37.2	37.5	48	50
	MH	dBa	35	35.3	45	47
	M	dBa	33	33.9	42	45
	ML	dBa	31.7	32.3	40	42
	L	dBa	28.9	29.8	35	37
	SL	dBa	27.2	28.5	31	34

Cassette					
System size			**12**	**18**	**24**
Indoor Sound Pressure HP Cooling mode	SS	dBa	46	46	39
	H	dBa	44	44	37
	M	dBa	42	42	35
Indoor Sound Pressure HP Heating mode	SS	dBa	53	46	49
	H	dBa	54	41	47
	M	dBa	52	38	45

Ducted							
System size			**9**	**12**	**18**	**21**	**24**
Indoor Sound Pressure HP Cooling mode	H	dBa	37	39	41	42	42
	M	dBa	34	35	37	38	38
	L	dBa	31	32	33	34	34
Indoor Sound Pressure HP Heating mode	H	dBa	47	49	51	52	52
	M	dBa	44	45	47	48	48
	L	dBa	41	42	43	44	44

Floor Console					
System size			**9**	**12**	**18**
Indoor Sound Pressure HP Cooling mode	SS	dBa	40	43	48
	H	dBa	38	40	46
	MH	dBa	36	38	44
	M	dBa	33	37	41
	ML	dBa	30	35	37
	L	dBa	26	32	35
	SL	dBa	25	27	33
Indoor Sound Pressure HP Heating mode	SS	dBa	50	53	58
	H	dBa	48	50	56
	MH	dBa	46	48	54
	M	dBa	43	47	51
	ML	dBa	40	45	47
	L	dBa	36	42	45
	SL	dBa	35	37	43

Multi Zone Outdoor Unit								
System size		**18**	**24**	**30**	**36**	**42**	**48**	**56**
H	dBa	56	59	59	61	61	55	57

ELECTRICAL DATA

F High Wall						
UNIT SIZE	SYSTEM VOLTAGE	OPERATING VOLTAGE	INDOOR FAN			
	VOLT / PHASE / HZ	MAX / MIN	V-PH-HZ	FLA	HP	W
9	208-230/1/60	253 / 187	208-230/1/60	0.1	0.0268	20
12				0.1	0.0268	20
18				0.1	0.0268	20

K*B High Wall						
UNIT SIZE	System Voltage	OPERATING VOLTAGE	INDOOR FAN			
	VOLT / PHASE / HZ	MAX / MIN	V-PH-HZ	FLA	HP	W
9	208-230/1/60	253 / 187	208-230/1/60	0.17	1/72	10
12				0.17	1/72	10
18				0.3	1/29	25
24				0.38	1/10	70

Cassette						
UNIT SIZE	System Voltage	OPERATING VOLTAGE	INDOOR FAN			
	VOLT / PHASE / HZ	MAX / MIN	V-PH-HZ	FLA	HP	W
12	208-230/1/60	253 / 187	208-230/1/60	0.18	1/72	46
18				0.18	1/72	46
24				0.43	1/20	46

Ducted						
UNIT SIZE	System Voltage	OPERATING VOLTAGE	INDOOR FAN			
	VOLT / PHASE / HZ	MAX / MIN	V-PH-HZ	FLA	HP	W
9	208-230/1/60	253 / 187	208-230/1/60	0.28	1/24	80
12				0.31	1/18	80
18				0.41	1/12	100
21				0.5	1/36'	124
24				0.5	1/36'	124

Floor Console						
UNIT SIZE	System Voltage	OPERATING VOLTAGE	INDOOR FAN			
	VOLT / PHASE / HZ	MAX / MIN	V-PH-HZ	FLA	HP	W
9	208-230/1/60	253 / 187	208-230/1/60	0.14	1/24	30
12				0.14	1/24	30
18				0.14	1/24	30

MULTI ZONE OUTDOOR UNIT								
UNIT SIZE	System Voltage	OPERATING VOLTAGE	COMPRESSOR	OUTDOOR FAN			MCA	MAX FUSE/CB AMP
	VOLT / PHASE / HZ	MAX / MIN	RLA	FLA	HP	W		
18	208-230/1/60	253 / 187	7.32	0.62	1/12	60	15	25
24			12.16	0.59	1/8	90	21	35
30			10.5	0.68	1/6	150	19	30
36			12.5	0.82	2/9	240	21	30
42			16.5	0.82	2/9	240	24	30
48			22	1	1/6	150	30	40
56			24	1	1/6	150	30	40

*Permissible limits of the voltage range at which the unit will operate satisfactorily.

LEGEND
FLA - Full Load Amps
LRA - Locked Rotor Amps
MCA - Minimum Circuit Amps
RLA - Rated Load Amps

MAX STATIC PRESSURE - DUCTED

System size		9	12	18	21	24
Max static pressure	Pa	10	10	10	15	15
	In.WG	0.04	0.04	0.04	0.06	0.06

FAN PERFORMANCES (DUCTED UNITS)

Static pressure curve (static pressure deducted)

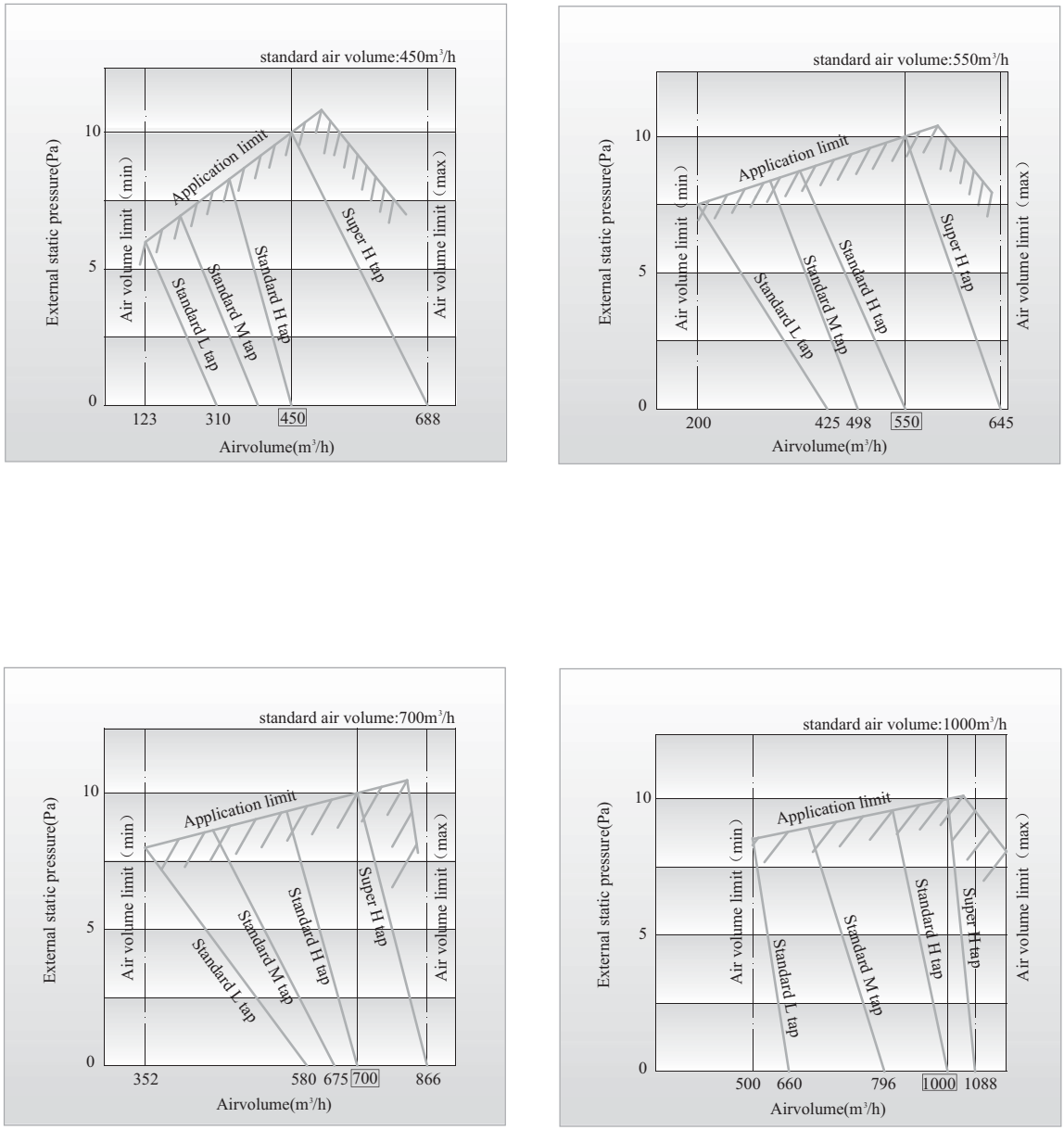

Fig. 22 – Fan performances

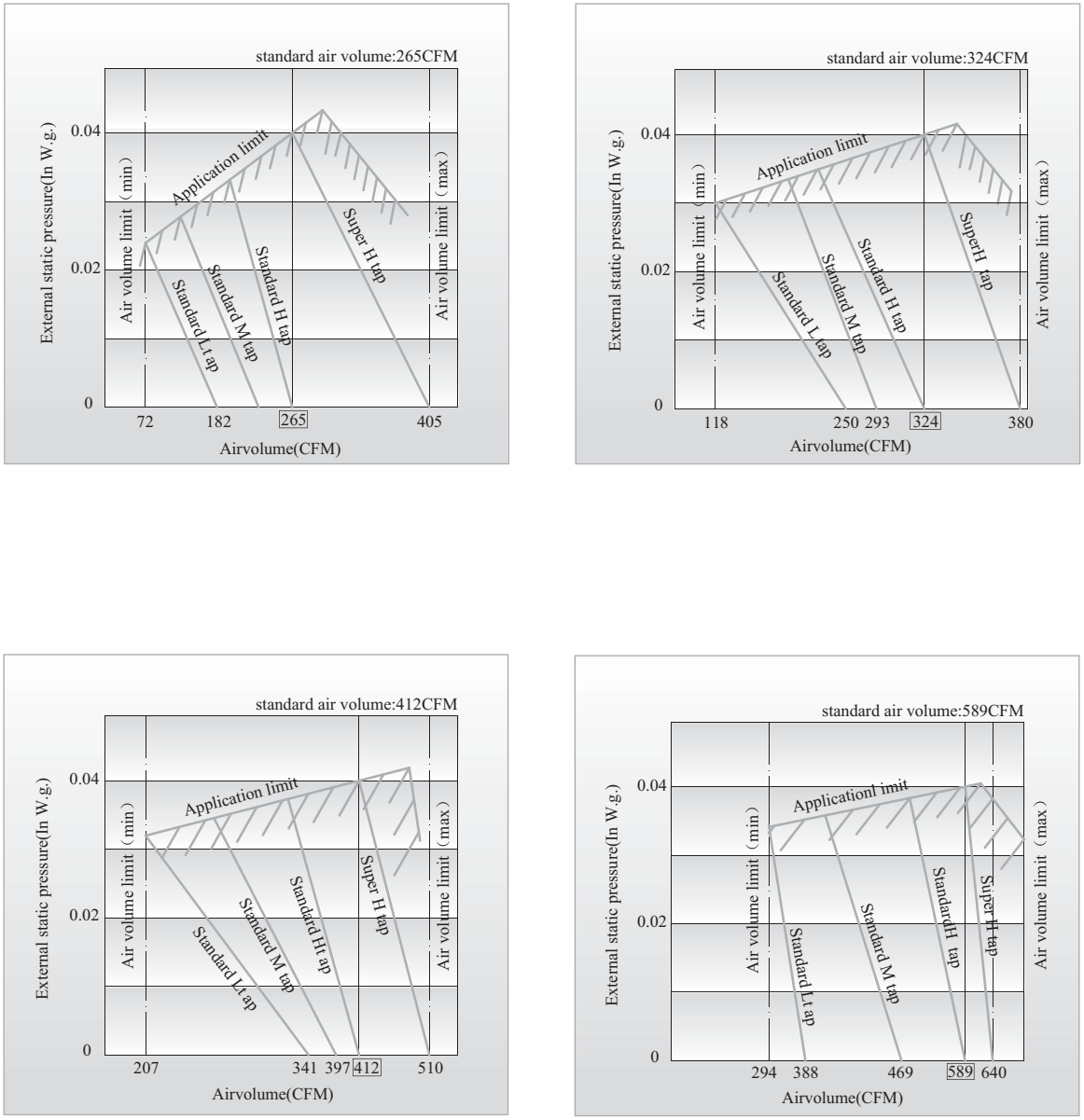

Fig. 23 – Fan performances

WIRING DIAGRAMS

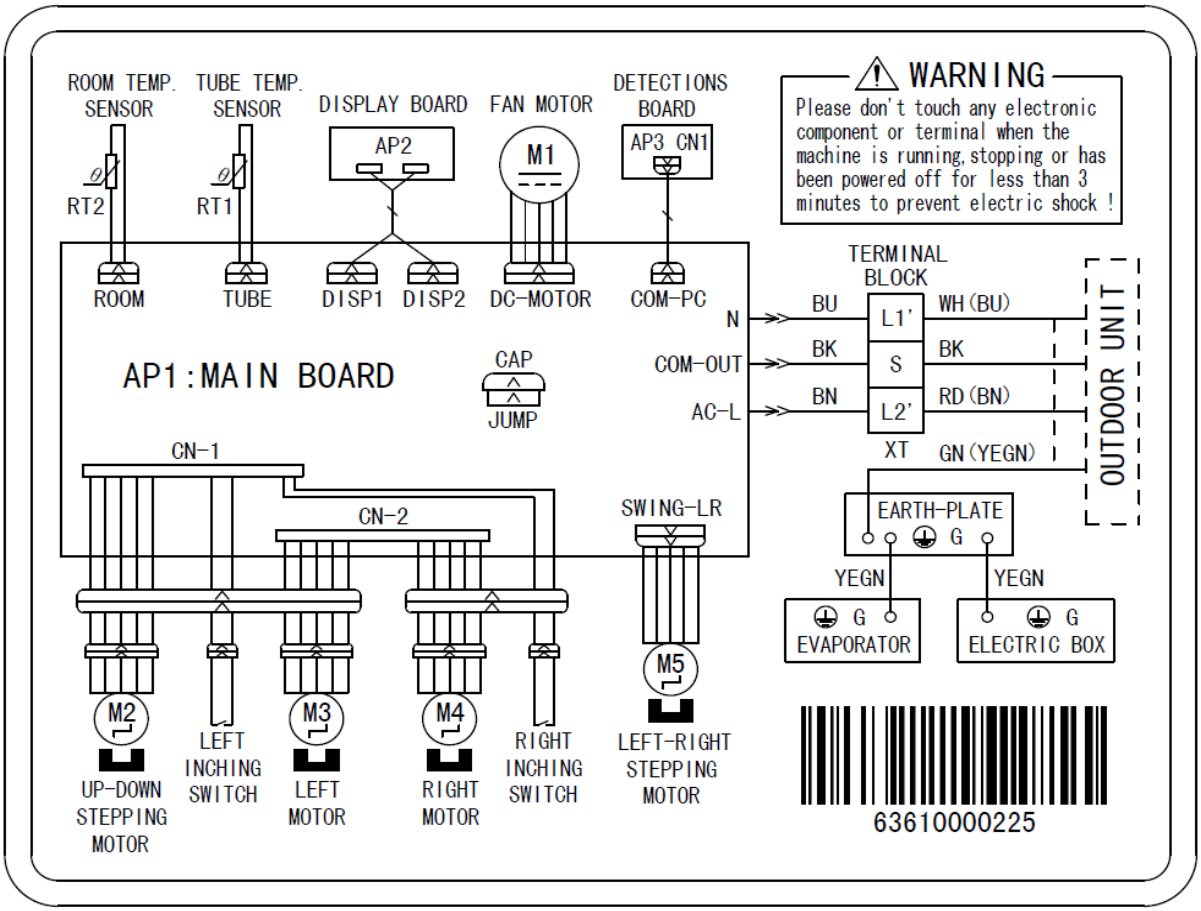

Fig. 24 – Wiring Diagrams F High Wall 9k, 12k and 18k

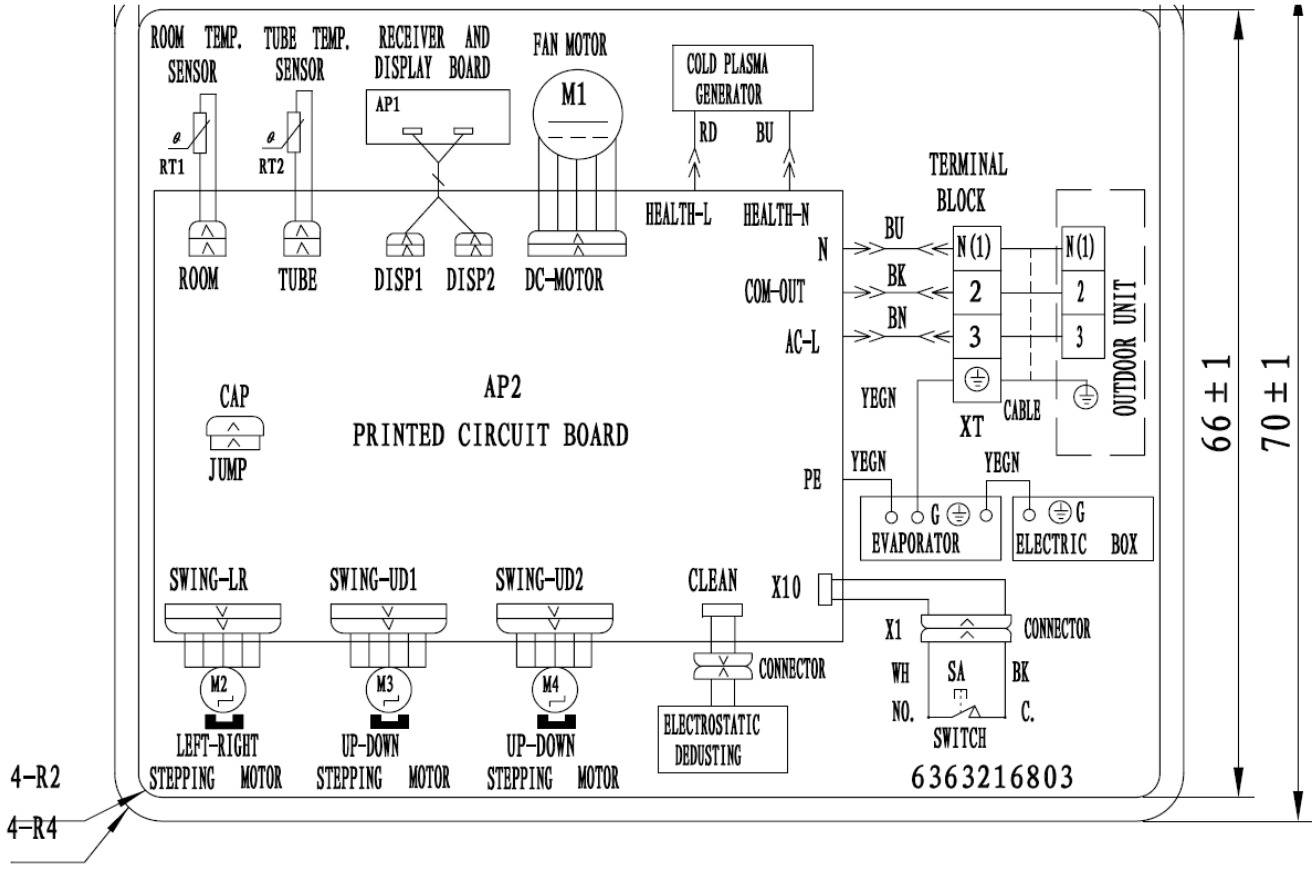

Fig. 18 – Wiring Diagrams K*B High Wall 9k, 12k, 18k and 24k

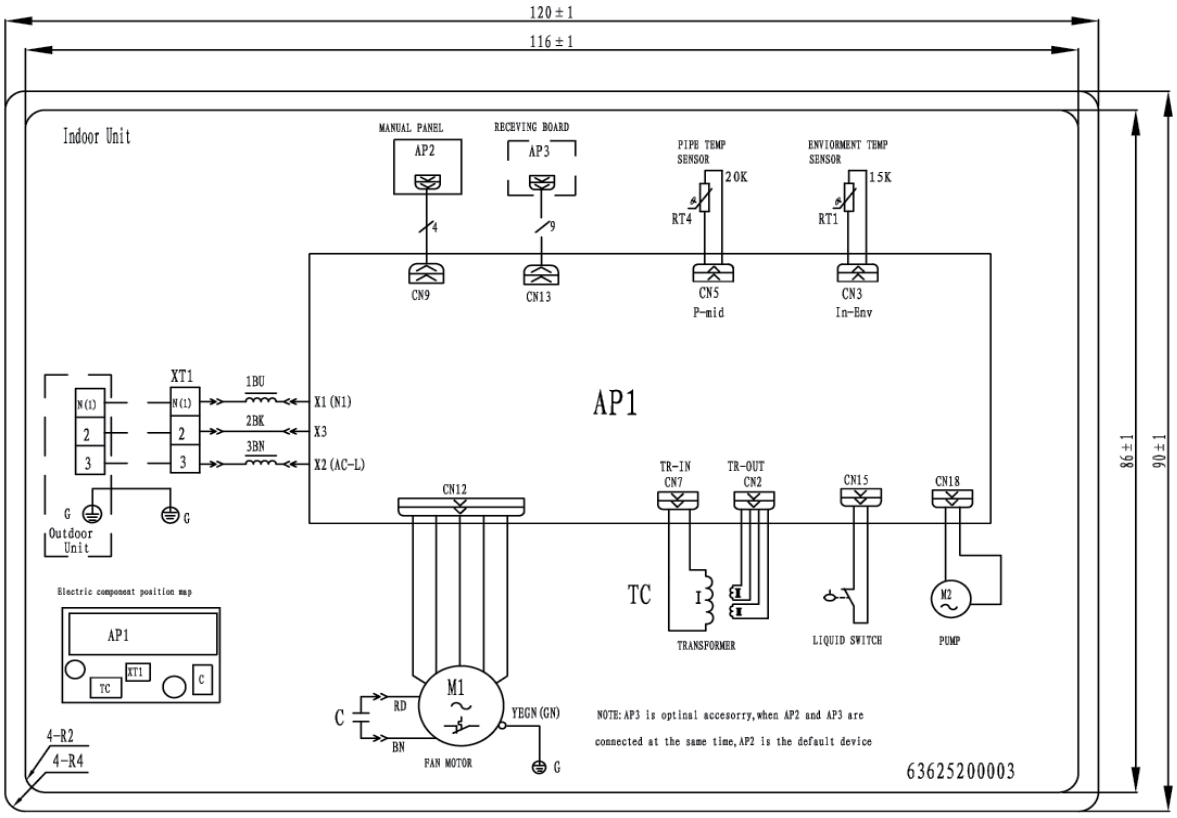

Fig. 19 – Wiring Diagram Ducted 9k, 12k, 18, 21k and 24k

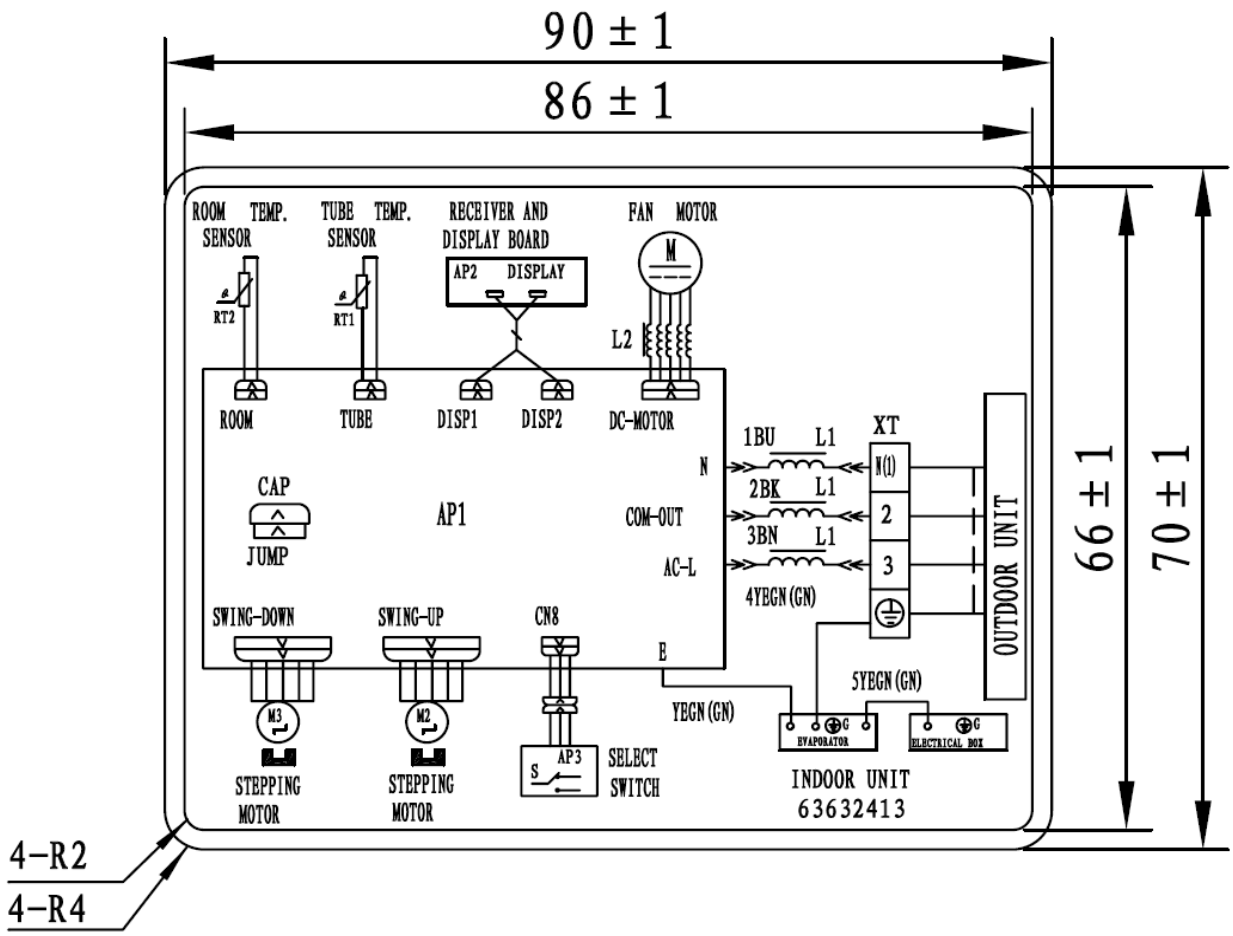

Fig. 20 – Wiring Diagrams Floor Console 9k, 12k and 18k

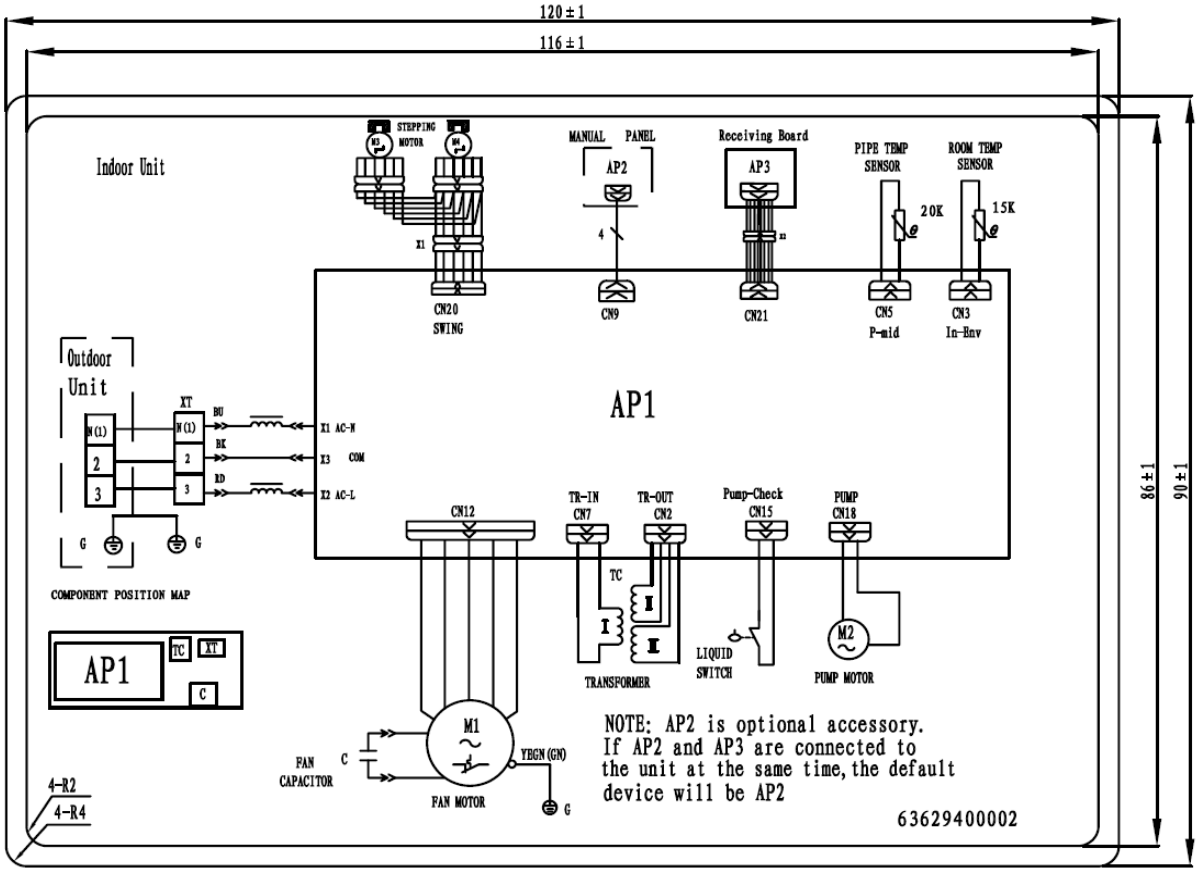

Fig. 23 – Wiring Diagram Cassette 12k, 18k

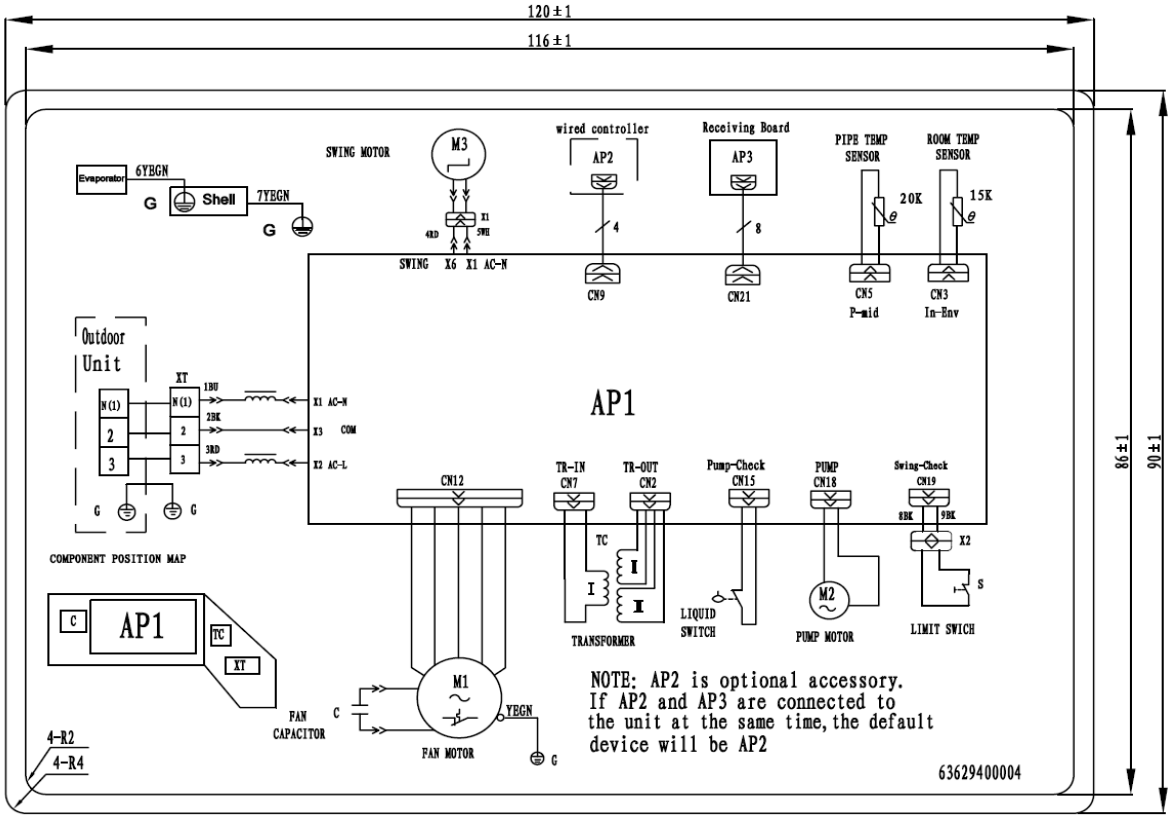

Fig. 24 – Wiring Diagram Cassette 24k

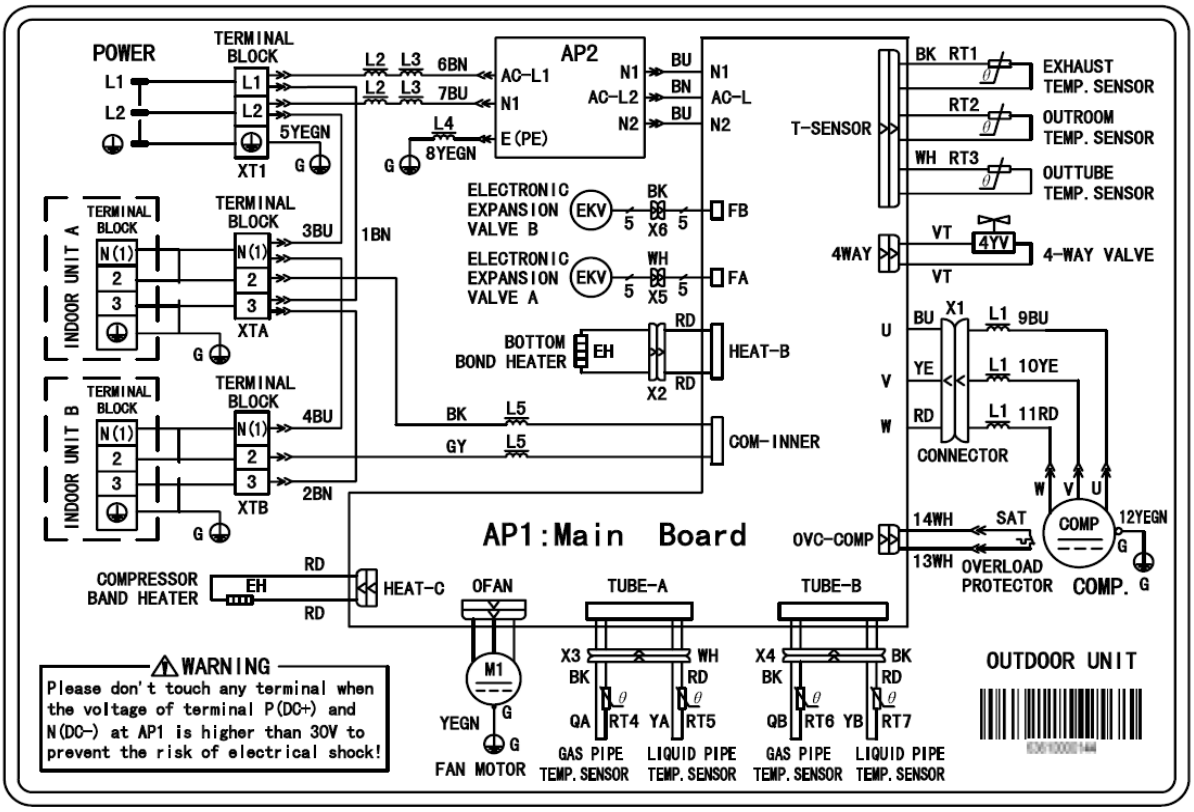

Fig. 25 – Wiring Diagram Outdoor 18k

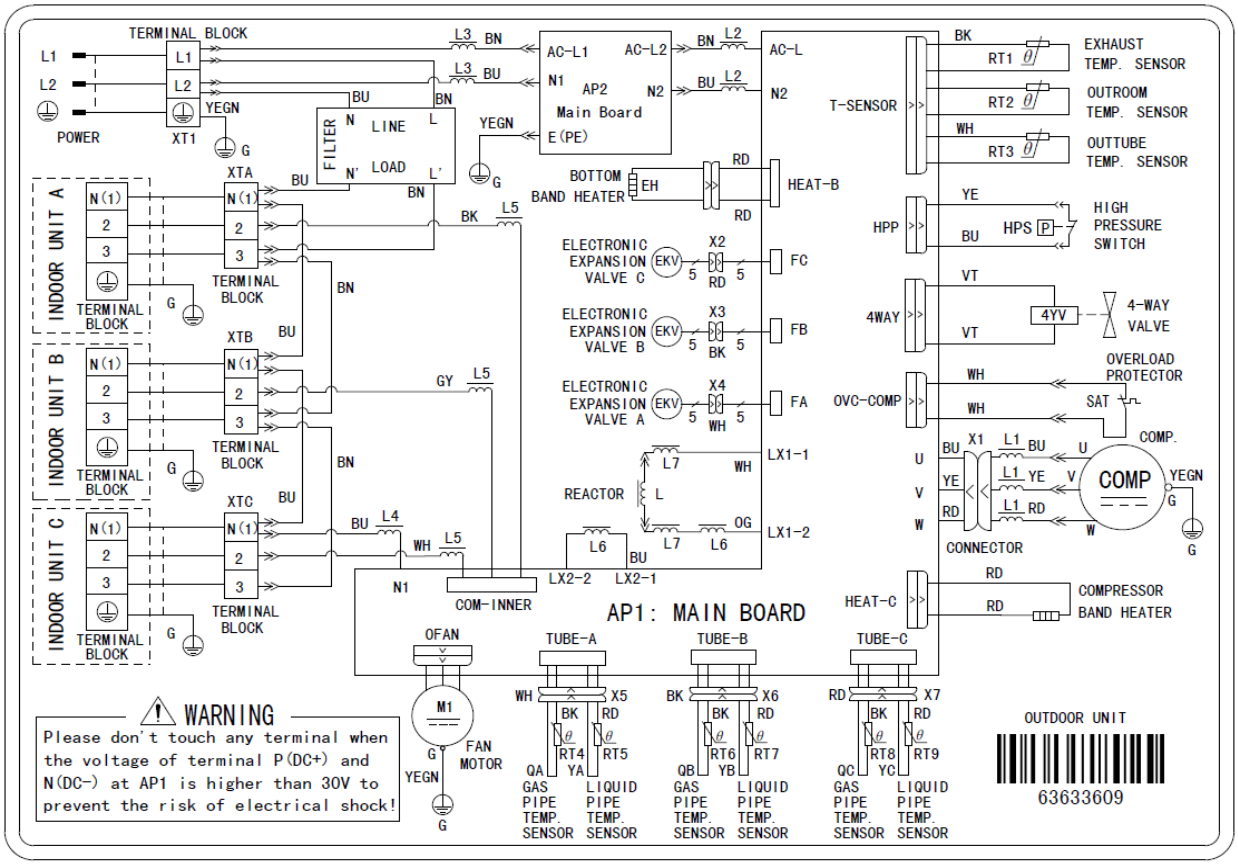

Fig. 25 – Wiring Diagram Outdoor 24k

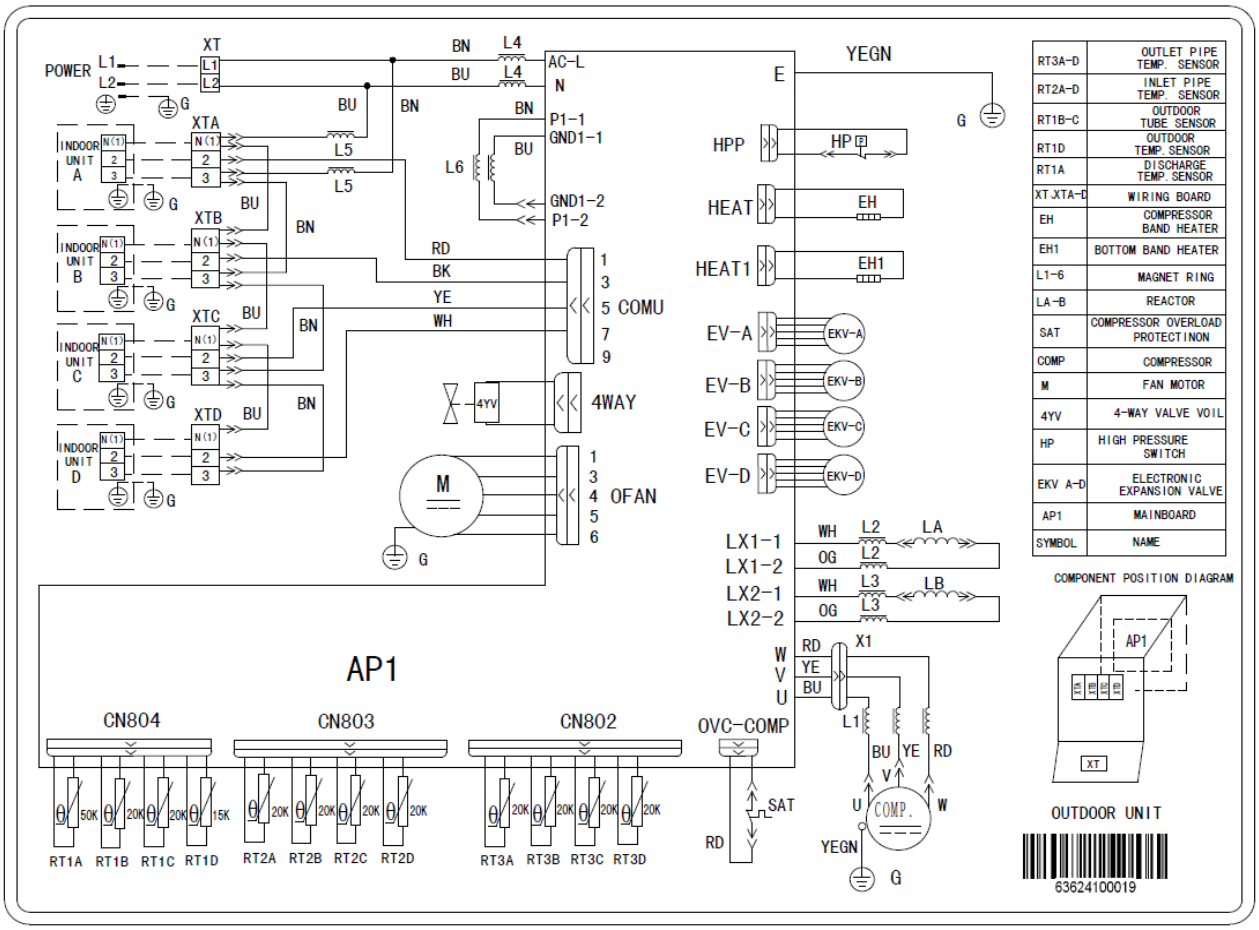

RT3A-D	OUTLET PIPE TEMP. SENSOR
RT2A-D	INLET PIPE TEMP. SENSOR
RT1B-C	OUTDOOR TUBE SENSOR
RT1D	OUTDOOR TEMP. SENSOR
RT1A	DISCHARGE TEMP. SENSOR
XT.XTA-D	WIRING BOARD
EH	COMPRESSOR BAND HEATER
EH1	BOTTOM BAND HEATER
L1-6	MAGNET RING
LA-B	REACTOR
SAT	COMPRESSOR OVERLOAD PROTECTINON
COMP	COMPRESSOR
M	FAN MOTOR
4YV	4-WAY VALVE VOIL
HP	HIGH PRESSURE SWITCH
EKV A-D	ELECTRONIC EXPANSION VALVE
AP1	MAINBOARD
SYMBOL	NAME

Fig. 28 – Wiring Diagram Outdoor 30k

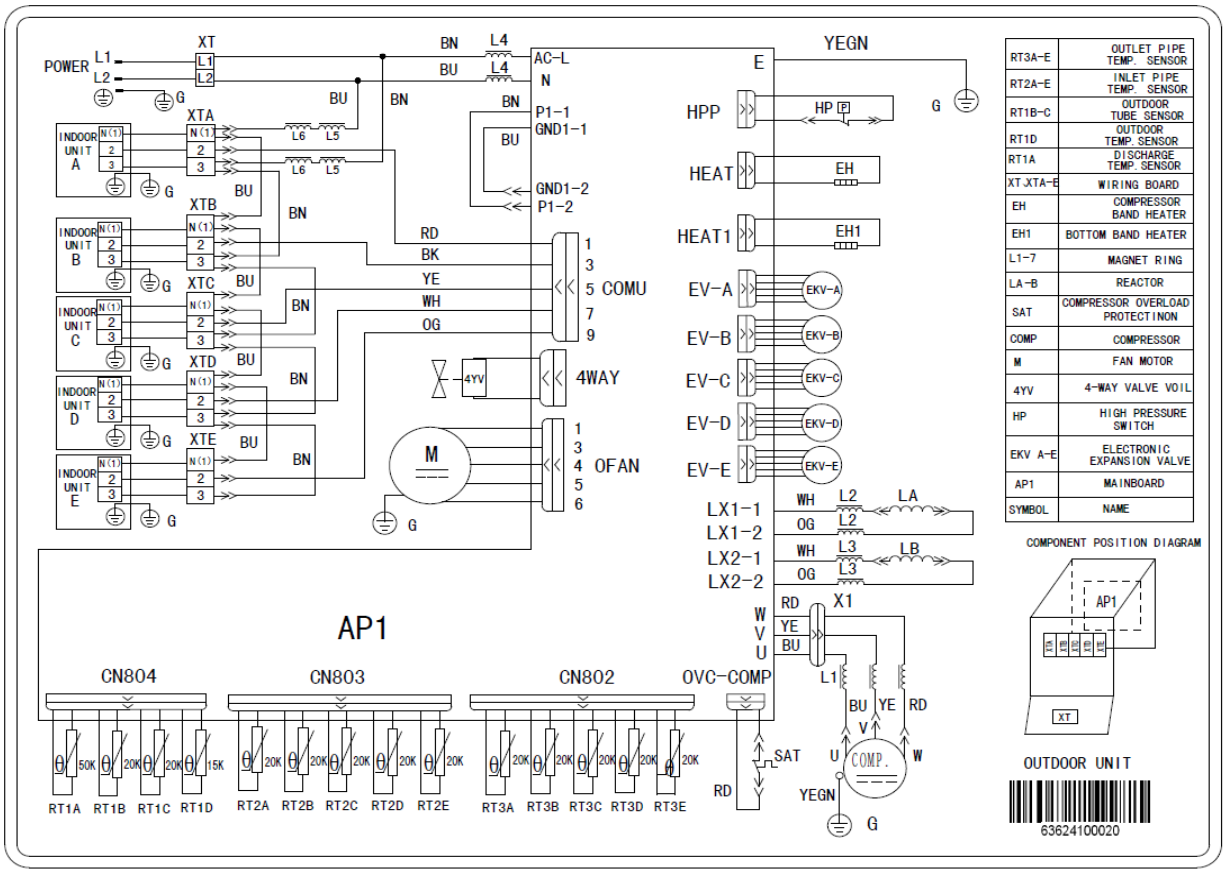

RT3A-E	OUTLET PIPE TEMP. SENSOR
RT2A-E	INLET PIPE TEMP. SENSOR
RT1B-C	OUTDOOR TUBE SENSOR
RT1D	OUTDOOR TEMP. SENSOR
RT1A	DISCHARGE TEMP. SENSOR
XT.XTA-E	WIRING BOARD
EH	COMPRESSOR BAND HEATER
EH1	BOTTOM BAND HEATER
L1-7	MAGNET RING
LA-B	REACTOR
SAT	COMPRESSOR OVERLOAD PROTECTINON
COMP	COMPRESSOR
M	FAN MOTOR
4YV	4-WAY VALVE VOIL
HP	HIGH PRESSURE SWITCH
EKV A-E	ELECTRONIC EXPANSION VALVE
AP1	MAINBOARD
SYMBOL	NAME

Fig. 29 – Wiring Diagram Outdoor 36k and 42k

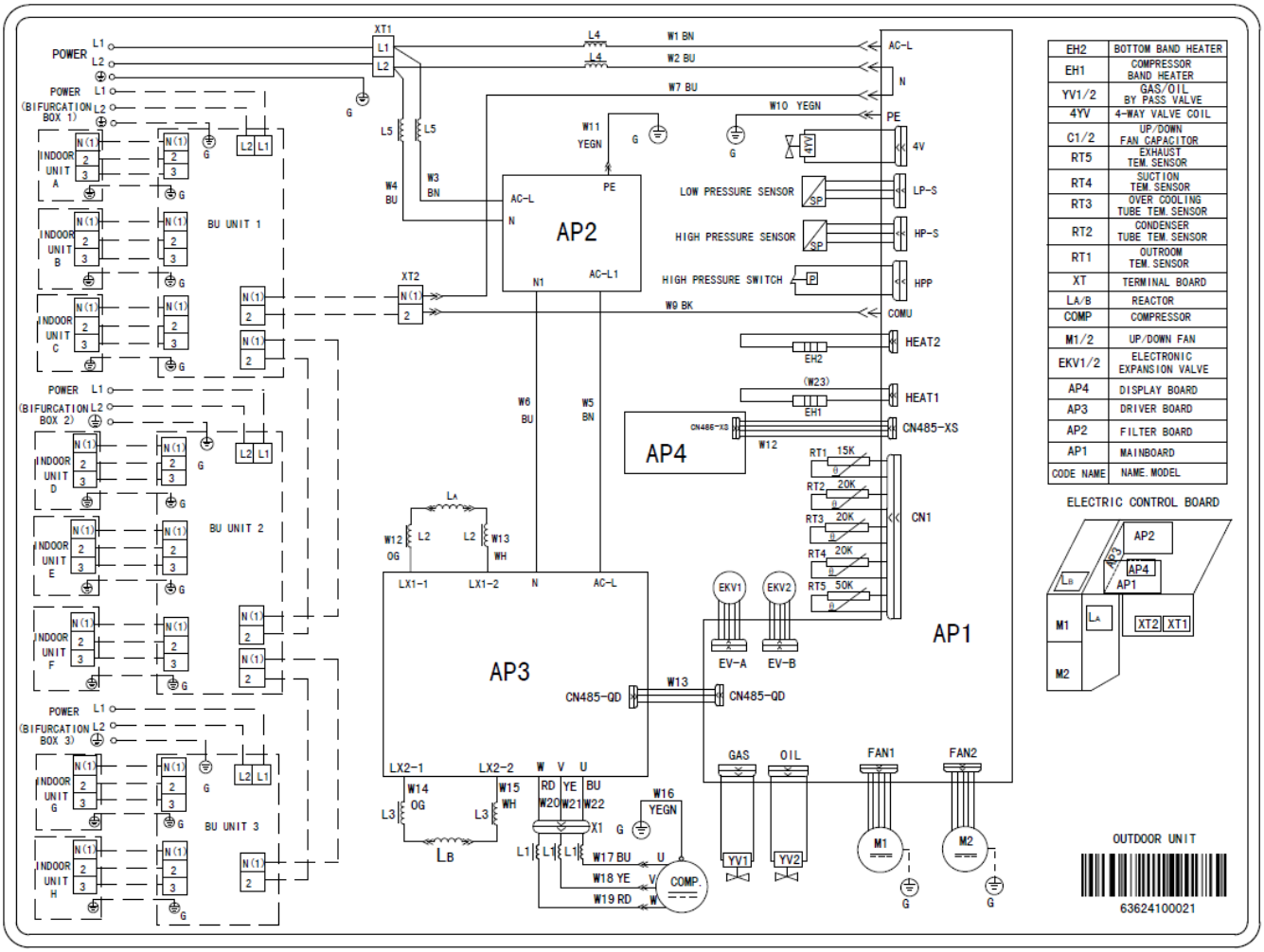

Fig. 31 – Wiring Diagram Outdoor 48k and 56k

GUIDE SPECIFICATIONS

HORIZONTAL DISCHARGE OUTDOOR UNITS

Size Range:1 ½, 2 ¼, 3 and 4 Ton Nominal Cooling and Heating Capacity

Model Number: **538KR**

PART 1 – GENERAL

1.01 System Description

A. Outdoor air-cooled split system compressor sections suitable for on-the-ground, rooftop, wall hung or balcony mounting. Units shall consist of a variable speed rotary compressor, an air-cooled coil, propeller-type draw-through outdoor fan, reversing valve, accumulator, electronic expansion valves, multiple service valves, and controls that allows multiple indoor units to be connected to the outdoor unit. Units shall discharge horizontally as shown on the contract drawings. Units shall function as the outdoor component of an air-to-air heat pump system.

B. Units shall be used in a refrigeration circuit matched to two, three, four, five, six, seven, eight or nine multi style heat pump fan coil units.

1.02 Agency Listings

A. Unit construction shall comply with ANSI/ASHRAE 15, latest revision, and with NEC.

B. Units shall be evaluated in accordance with UL standard 1995.

C. Units shall be listed in CEC directory.

D. Unit cabinet shall be capable of withstanding 500-hour salt spray test per Federal Test Standard no. 141 (method 6061).

E. Air-cooled condenser coils shall be leak tested at 550 psig.

1.03 Delivery, Storage, And Handling

Units shall be shipped in one piece and shall be stored and handled per manufacturer's recommendations.

1.04 Warranty (For Inclusion By Specifying Engineer)

PART 2 – PRODUCTS

2.01 Equipment

A. General:

Factory assembled, single piece, air-cooled outdoor unit. Contained within the enclosure shall be all factory wiring, piping, controls, and compressor.

B. Unit Cabinet:

1. Unit cabinet shall be constructed of galvanized steel, bonderized and coated with baked-enamel finish on inside and outside.
2. Unit access panel should be removable with minimal screws and shall provide full access to the compressor, fan, and control components.
3. Outdoor compartment shall be isolated and have an acoustic lining to assure quiet operation.

C. Fans:

1. Outdoor fans shall be direct-drive propeller type, and shall discharge air horizontally. Fan shall draw air through the outdoor coil.
2. Outdoor fan motors shall be multi-speed, totally-enclosed, single phase motors with permanently lubricated ball bearings. Motor shall be protected by internal thermal overload protection.
3. Shaft shall have inherent corrosion resistance.
4. Outdoor fan openings shall be equipped with metal/mesh PVC coated protection grille over fan.

D. Compressor

1. Compressor shall be fully hermetic variable speed rotary type.
2. Compressor shall be single phase, inverter driven.
3. Compressor shall be equipped with oil system, operating oil charge, and motor.
4. Motor shall be suitable for operation in refrigerant and oil atmosphere.
5. Compressor assembly shall be installed on rubber vibration isolators.
6. The inverter and compressor shall be protected against over temperature and over current.

E. Outdoor Coil:

Coil shall be constructed of Aluminum fins mechanically bonded to seamless copper tubes, which are cleaned, dehydrated and sealed.

F. Refrigerant Components:

Refrigerant circuit components shall include multiple brass external liquid line service valves with service gauge connection port, multiple suction line service valves with service gage connection port, accumulator, reversing valve, electronic expansion valves.

G. Safeties:

Operating safeties shall be factory selected, assembled, and tested. The minimum functions shall include the following:

1. Compressor discharge over temperature protection.
2. System low voltage protection.
3. Compressor overload protection.
4. Compressor over current protection.
5. IPM module protection.

H. Electrical Requirements:

1. Units shall operate on single-phase, 60 Hz power at 208/230 v.
2. Unit electrical power shall be a single point connection.
3. All power and control wiring must be installed per NEC and all local electrical codes.
4. Units shall have multiple terminal blocks to connect to multiple indoor units.

GUIDE SPECIFICATIONS

INDOOR WALL-MOUNTED DUCTLESS UNITS

Size Range: ¾ to 1 ½ Ton Nominal Cooling and Heating Capacity

Model Number: 619FB

PART 1 – GENERAL

1.01 System Description

Indoor, wall-mounted, direct expansion fan coils are matched with heat pump outdoor units.

1.02 Agency Listings

Unit shall be rated per AHRI Standards 210/240 and listed in the AHRI directory as a matched system.

1.03 Delivery, Storage, And Handling

Units shall be shipped in one piece and shall be stored and handled per manufacturer's recommendations.

1.04 Warranty (For Inclusion By Specifying Engineer)

PART 2 – PRODUCTS

2.01 Equipment

A. General:

Indoor, direct-expansion, wall-mounted fan coil. Unit shall be complete with cooling/heating coil, fan, fan motor, piping connectors, electrical controls, microprocessor control system, and integral temperature sensing. Unit shall be furnished with integral wall mounting bracket and mounting hardware.

B. Unit Cabinet:

Cabinet discharge and inlet grilles shall be attractively styled, high-impact polystyrene. Cabinet shall be fully insulated for improved thermal / acoustic performance.

C. Fans:

1. Fan shall be tangential direct-drive blower type with air intake at the top of the unit and discharge at the bottom front. Automatic, motor-driven vertical air sweep shall be provided standard.
2. Air sweep operation shall be useable selectable. The vertical sweep may be adjusted (using the remote control) and the horizontal air direction maybe be set manually.

D. Coil:

Coil shall be copper tube with aluminum fins and galvanized steel tube sheets. Fins shall be bonded to the tubes by mechanical expansion. A drip pan under the coil shall have a drain connection for hose attachment to remove condensate. Condensate pan shall have internal trap.

E. Motors:

Motors shall be totally enclosed, permanently lubricated ball bearing with inherent overload protection. Fan motors shall be 7-speed.

F. Controls:

Controls shall consist of a microprocessor-based control system which shall control space temperature, determine optimum fan speed, and run self diagnostics. The temperature control range shall be from 62°F to 86°F (17°C to 30°C) in increments of 1°F or 1°C, and have 46°F Heating Mode (Heating Setback). The wireless remote controller shall have the ability to act as the temperature sensing location for room comfort.

The unit shall have the following functions as a minimum:

- An automatic restart after power failure at the same operating conditions as at failure.
- A timer function to provide a minimum 24-hour timer cycle for system Auto Start/Stop.
- Temperature-sensing controls shall sense return air temperature.
- Indoor coil freeze protection.
- Wireless infrared remote control to enter set points and operating conditions.
- Automatic air sweep control to provide on or off activation of air sweep louvers.
- Dehumidification mode shall provide increased latent removal capability by modulating system operation and set point temperature.
- Fan-only operation to provide room air circulation when no cooling is required.
- Diagnostics shall provide continuous checks of unit operation and warn of possible malfunctions. Error messages shall be displayed at the unit.
- Fan speed control shall be user-selectable: Super High to Super Low, or microprocessor controlled automatic operation during all operating modes.
- Automatic heating-to-cooling changeover in heat pump mode. Control shall include deadband to prevent rapid mode cycling between heating and cooling.
- Indoor coil high temperature protection shall be provided to detect excessive indoor discharge temperature when unit is in heat pump mode.

G. Filters:

Units shall have filter track with factory-supplied cleanable filters.

H. Electrical Requirements:

Indoor fan motor to operate on 208-230V. Power is supplied from the outdoor unit on sizes 18 trough 42 and from the branch box on sizes 48 and 56.

I. Operating Characteristics:

The system shall have a minimum SEER (Seasonal Energy Efficiency Ratio) and HSPF at AHRI conditions, as listed on the specifications table.

J. Refrigerant Lines:

All units should have refrigerant lines that can be oriented to connect from the left, right or back of unit. Both refrigerant lines need to be insulated.

K. Special Features (Field Installed):

- Condensate Pump:
  The condensate pump shall remove condensate from the drain pan when gravity drainage cannot be used. Pump shall be designed for quiet operation. Pump shall consist of two parts: an internal reservoir/sensor assembly, and a remote sound-shielded pump assembly. A liquid level sensor in the reservoir shall stop cooling operation if the liquid level in the reservoir is unacceptable.

GUIDE SPECIFICATIONS

INDOOR WALL-MOUNTED DUCTLESS UNITS

Size Range: ¾ to 2 Ton Nominal Cooling and Heating Capacity

Model Number: 619KB

PART 1 – GENERAL

1.01 System Description

Indoor, wall-mounted, direct expansion fan coils are matched with heat pump outdoor units.

1.02 Agency Listings

Unit shall be rated per AHRI Standards 210/240 and listed in the AHRI directory as a matched system.

1.03 Delivery, Storage, And Handling

Units shall be shipped in one piece and shall be stored and handled per manufacturer's recommendations.

1.04 Warranty (For Inclusion By Specifying Engineer)

PART 2 – PRODUCTS

2.01 Equipment

A. General:

Indoor, direct-expansion, wall-mounted fan coil. Unit shall be complete with cooling/heating coil, fan, fan motor, piping connectors, electrical controls, microprocessor control system, and integral temperature sensing. Unit shall be furnished with integral wall mounting bracket and mounting hardware.

B. Unit Cabinet:

Cabinet discharge and inlet grilles shall be attractively styled, high-impact polystyrene. Cabinet shall be fully insulated for improved thermal / acoustic performance.

C. Fans:

1. Fan shall be tangential direct-drive blower type with air intake at the top of the unit and discharge at the bottom front. Automatic, motor-driven vertical air sweep shall be provided standard.
2. Air sweep operation shall be useable selectable. The vertical sweep may be adjusted (using the remote control) and the horizontal air direction maybe be set manually.

D. Coil:

Coil shall be copper tube with aluminum fins and galvanized steel tube sheets. Fins shall be bonded to the tubes by mechanical expansion. A drip pan under the coil shall have a drain connection for hose attachment to remove condensate. Condensate pan shall have internal trap.

E. Motors:

Motors shall be totally enclosed, permanently lubricated ball bearing with inherent overload protection. Fan motors shall be 7-speed.

F. Controls:

Controls shall consist of a microprocessor-based control system which shall control space temperature, determine optimum fan speed, and run self diagnostics. The temperature control range shall be from 62°F to 86°F (17°C to 30°C) in increments of 1°F or 1°C, and have 46°F Heating Mode (Heating Setback). The wireless remote controller shall have the ability to act as the temperature sensing location for room comfort.

The unit shall have the following functions as a minimum:

- An automatic restart after power failure at the same operating conditions as at failure.
- A timer function to provide a minimum 24-hour timer cycle for system Auto Start/Stop.
- Temperature-sensing controls shall sense return air temperature.
- Indoor coil freeze protection.
- Wireless infrared remote control to enter set points and operating conditions.
- Automatic air sweep control to provide on or off activation of air sweep louvers.
- Dehumidification mode shall provide increased latent removal capability by modulating system operation and set point temperature.
- Fan-only operation to provide room air circulation when no cooling is required.
- Diagnostics shall provide continuous checks of unit operation and warn of possible malfunctions. Error messages shall be displayed at the unit.
- Fan speed control shall be user-selectable: Super High to Super Low, or microprocessor controlled automatic operation during all operating modes.
- Automatic heating-to-cooling changeover in heat pump mode. Control shall include deadband to prevent rapid mode cycling between heating and cooling.
- Indoor coil high temperature protection shall be provided to detect excessive indoor discharge temperature when unit is in heat pump mode.

G. Filters:

Units shall have filter track with factory-supplied cleanable filters.

H. Electrical Requirements:

Indoor fan motor to operate on 208-230V. Power is supplied from the outdoor unit on sizes 18 trough 42 and from the branch box on sizes 48 and 56.

I. Operating Characteristics:

The system shall have a minimum SEER (Seasonal Energy Efficiency Ratio) and HSPF at AHRI conditions, as listed on the specifications table.

J. Refrigerant Lines:

All units should have refrigerant lines that can be oriented to connect from the left, right or back of unit. Both refrigerant lines need to be insulated.

K. Special Features (Field Installed):

1. Condensate Pump:
   The condensate pump shall remove condensate from the drain pan when gravity drainage cannot be used. Pump shall be designed for quiet operation. Pump shall consist of two parts: an internal reservoir/sensor assembly, and a remote sound-shielded pump assembly. A liquid level sensor in the reservoir shall stop cooling operation if the liquid level in the reservoir is unacceptable.

GUIDE SPECIFICATIONS

INDOOR CASSETTE DUCTLESS UNITS

Size Range: 1 to 2 Ton Nominal Cooling and Heating Capacity

Model Number: 619KC

PART 1 - GENERAL

1.01 System Description

Indoor, in-ceiling cassette, direct-expansion fan coils are matched with heat pump outdoor unit.

1.02 Agency Listings

Unit shall be rated per AHRI Standards 210/240 and listed in the AHRI directory as a matched system.

1.03 Delivery, Storage, And Handling

Units shall be stored and handled per unit manufacturer's recommendations.

1.04 Warranty (For Inclusion By Specifying Engineer)

PART 2 - PRODUCTS

2.01 Equipment

General:

Indoor, direct-expansion, in-ceiling cassette fan coil. Unit shall be complete with cooling/heating coil, fan, fan motor, piping connectors, electrical controls, microprocessor control system, and integral temperature sensing.

Unit Cabinet:

Cabinet shall be constructed of zinc-coated steel. Fully insulated discharge and inlet grilles shall be attractively styled, high-impact polystyrene. Grille shall have hinges and can be opened to obtain access to the cleanable filters, indoor fan motor and control box.

Fans:

- Fan shall be centrifugal direct--drive blower type with air intake in the center of the unit and discharge at the perimeter. Automatic, motor-driven vertical air sweep shall be provided standard. Automatic motor--driven louvers shall be provided standard and shall be adjustable for 2, 3 or 4-way discharge.
- Air sweep operation shall be user selectable.

Coil:

Coil shall be copper tube with aluminum fins and galvanized steel tube sheets. Fins shall be bonded to the tubes by mechanical expansion and specially coated for enhanced wet-ability. A drip pan under the coil shall have a factory installed condensate pump and drain connection for hose attachment to remove condensate.

Motors:

Motors shall be open drip-proof, permanently lubricated ball bearing with inherent overload protection. Fan motors shall be 3-speed.

Controls:

Controls shall consist of a microprocessor-based control system which shall control space temperature, determine optimum fan speed, and run self diagnostics. The temperature control range shall be from 62°F to 86°F (17°C to 30°C) in increments of 1°F or 1°C, and have 46°F Heating Mode (Heating Setback). The wireless remote controller, shall have the ability to act as the temperature sensing location for room comfort.

The unit shall have the following functions as a minimum:

- An automatic restart after power failure at the same operating conditions as at failure.
- A timer function to provide a minimum 24-hour timer cycle for system Auto Start/Stop.
- Temperature-sensing controls shall sense return air temperature.
- Indoor coil freeze protection.
- Wireless infrared remote control and/or wired remote control to enter set points and operating conditions.
- Automatic air sweep control to provide on or off activation of air sweep louvers.
- Dehumidification mode shall provide increased latent removal capability by modulating system operation and set point temperature.
- Fan-only operation to provide room air circulation when no cooling is required.
- Diagnostics shall provide continuous checks of unit operation and warn of possible malfunctions. Error messages shall be displayed at the unit.
- Fan speed control shall be user-selectable: high, medium, low, or microprocessor controlled automatic operation during all operating modes.
- Automatic heating-to-cooling changeover in heat pump mode. Control shall include deadband to prevent rapid mode cycling between heating and cooling.
- Indoor coil high temperature protection shall be provided to detect excessive indoor discharge temperature when unit is in heat pump mode.

Filters:

Unit shall have filter track with factory-supplied cleanable filters.

Electrical Requirements:

Indoor fan motor to operate on 208-230V. Power is supplied from the outdoor unit on sizes 18 trough 42 and from the branch box on sizes 48 and 56.

Operating Characteristics:

The system shall have a minimum SEER (Seasonal Energy Efficiency Ratio) and HSPF at AHRI conditions, as listed on the specifications table.

Refrigerant Lines:

All units should have refrigerant lines that can be oriented to connect from the side of unit. Both refrigerant lines need to be insulated.

GUIDE SPECIFICATIONS

INDOOR DUCTED UNITS

Size Range: ¾ to 2 Ton Nominal Cooling and Heating Capacity

Model Number: 619KD

PART 1 - GENERAL

1.01 System Description

Indoor, ceiling-mounted, direct-expansion fan coils are matched with a heat pump outdoor unit.

1.02 Agency Listings

Unit shall be rated per AHRI Standards 210/240 and listed in the AHRI directory as a matched system.

1.03 Delivery, Storage, And Handling

Units shall be stored and handled per unit manufacturer's recommendations.

1.04 Warranty (For Inclusion By Specifying Engineer)

PART 2 - PRODUCTS

2.01 Equipment

A. General:

Indoor, direct-expansion, ceiling-mounted fan coil. Unit shall be complete with cooling/heating coil, fan, fan motor, piping connectors, electrical controls, microprocessor control system, and integral temperature sensing.

B, Unit Cabinet:

Unit cabinet shall be constructed of galvanized steel. Cabinet shall be fully insulated for improved thermal and acoustic performance.

C. Fans:

Fan shall be tangential direct-drive blower type with air intake at the rear or bottom of the unit and discharge at the front.

D. Coil:

Coil shall be copper tube with aluminum fins and galvanized steel tube sheets. Fins shall be bonded to the tubes by mechanical expansion. A drip pan under the coil shall have a factory installed condensate pump and drain connection for hose attachment to remove condensate.

E. Motors:

Motors shall be open drip-proof, permanently lubricated ball bearing with inherent overload protection. Fan motors shall be 3-speed.

F. Controls:

Controls shall consist of a microprocessor-based control system which shall control space temperature, determine optimum fan speed, and run self diagnostics. The temperature control range shall be from 62°F to 86°F (17°C to 30°C) in increments of 1°F or 1°C, and have 46°F Heating Mode (Heating Setback). The wireless remote controller shall have the ability to act as the temperature sensing location for room comfort.

The unit shall have the following functions as a minimum:

1. An automatic restart after power failure at the same operating conditions as at failure.
2. A timer function to provide a minimum 24-hour timer cycle for system Auto Start/Stop.
3. Temperature-sensing controls shall sense return air temperature.
4. Indoor coil freeze protection.
5. Wireless infrared remote control and/or Wired remote control to enter set points and operating conditions.
6. De-humidification mode shall provide increased latent removal capability by modulating system operation and set point temperature.
7. Fan-only operation to provide room air circulation when no cooling is required.
8. Diagnostics shall provide continuous checks of unit operation and warn of possible malfunctions. Error messages shall be displayed at the unit.
9. Fan speed control shall be user-selectable: high, medium, low, or microprocessor controlled automatic operation during all operating modes.
10. Automatic heating-to-cooling changeover in heat pump mode. Control shall include deadband to prevent rapid mode cycling between heating and cooling.
11. Indoor coil high temperature protection shall be provided to detect excessive indoor discharge temperature when unit is in heat pump mode.

G. Electrical Requirements:

Indoor fan motor to operate on 208-230V. Power is supplied from the outdoor unit on sizes 18 trough 42 and from the branch box on sizes 48 and 56.

H. Operating Characteristics:

The system shall have a minimum SEER (Seasonal Energy Efficiency Ratio) and HSPF at AHRI conditions, as listed on the specifications table.

I. Refrigerant Lines:

All units should have refrigerant lines that can be oriented to connect from the side of the unit. Both refrigerant lines need to be insulated.

PART 1 - GENERAL

1.01 System Description

Indoor, wall-mounted, direct-expansion fan coils are matched with a heat pump outdoor unit.

1.02 Agency Listings

Unit shall be rated per AHRI Standards 210/240 and listed in the AHRI directory as a matched system.

1.03 Delivery, Storage, And Handling

Units shall be stored and handled per unit manufacturer's recommendations.

1.04 Warranty (For Inclusion By Specifying Engineer)

PART 2 - PRODUCTS

2.01 Equipment

A. General:

Indoor, direct-expansion, floor-mounted fan coil. Unit shall be complete with cooling/heating coil, fan, fan motor, piping connectors, electrical controls, microprocessor control system, and integral temperature sensing. Unit shall be furnished with integral mounting bracket and mounting hardware.

B. Unit Cabinet:

Cabinet discharge and inlet grilles shall be attractively styled, high-impact polystyrene. Cabinet shall be fully insulated for improved thermal and acoustic performance.

C Fans:

1. Fan shall be tangential direct-drive blower type with air intake in the center of the unit and discharge at the top and bottom front. Automatic, motor-driven vertical air sweep shall be provided standard.

2. Air sweep operation shall be user selectable. The vertical sweep may be adjusted (using the remote control) and the horizontal air direction may be set manually.

D. Coil:

Coil shall be copper tube with aluminum fins and galvanized steel tube sheets. Fins shall be bonded to the tubes by mechanical expansion. A drip pan under the coil shall have a drain connection for hose attachment to remove condensate. Condensate pan shall have internal trap.

E. Motors:

Motors shall be open drip-proof, permanently lubricated ball bearing with inherent overload protection. Fan motors shall be 7-speed.

F Controls:

Controls shall consist of a microprocessor-based control system which shall control space temperature, determine optimum fan speed, and run self diagnostics. The temperature control range shall be from 62°F to 86°F (17°C to 30°C) in increments of 1°F or 1°C, and have 46°F Heating Mode (Heating Setback). The wireless remote controller shall have the ability to act as the temperature sensing location for room comfort.

The unit shall have the following functions as a minimum:

1. An automatic restart after power failure at the same operating conditions as at failure.

2. A timer function to provide a minimum 24-hour timer cycle for system Auto Start/Stop.

3.Temperature-sensing controls shall sense return air temperature.

4. Indoor coil freeze protection.

5.Wireless infrared remote control to enter set points and operating conditions.

6. Automatic air sweep control to provide on or off activation of air sweep louvers.

7. De humidification mode shall provide increased latent removal capability by modulating system operation and set point temperature.

8. Fan-only operation to provide room air circulation when no cooling is required.

9. Diagnostics shall provide continuous checks of unit operation and warn of possible malfunctions. Error messages shall be displayed at the unit.

10. Fan speed control shall be user-selectable: Super high to super low, or microprocessor controlled automatic operation during all operating modes.

11. Automatic heating-to-cooling changeover in heat pump mode. Control shall include deadband to prevent rapid mode cycling between heating and cooling.

12. Indoor coil high temperature protection shall be provided to detect excessive indoor discharge temperature when unit is in heat pump mode.

G. Filters: Unit shall have filter track with factory-supplied cleanable filters.

H. Electrical Requirements: Indoor fan motor to operate on 208-230V as specified. Power is supplied from the outdoor unit on sizes 18 trough 42 and from the branch box on sizes 48 and 56.

I. Operating Characteristics: The system shall have a minimum SEER (Seasonal Energy Efficiency Ratio) and HSPF at AHRI conditions, as listed on the specifications table.

J. Refrigerant Lines:

All units should have refrigerant lines that can be oriented to connect from the left, right or back of unit. Both refrigerant lines need to be insulated.

K. Special Features (Field Installed):

1. Condensate Pump: The condensate pump shall remove condensate from the drain pan when gravity drainage cannot be used. Pump shall be designed for quiet operation. Pump shall consist of two parts: an internal reservoir/sensor assembly, and a remote sound-shielded pump assembly. A liquid level sensor in the reservoir shall stop cooling operation if the liquid level in the reservoir is unacceptable.

© 2015 Bryant Heating & Cooling Systems 7310 W. Morris St. Indianapolis, IN 46231
Edition Date:06/15
Catalog No.PDS538KE-01
Replaces: NEW
Manufacturer reserves the right to discontinue, or change at any time, specifications or designs without notice and without incurring obligations.