548J
PACKAGED ROOFTOP HEAT PUMP UNITS 15 AND 20 TONS

bryant®

Product Data

LEGACY™ LINE

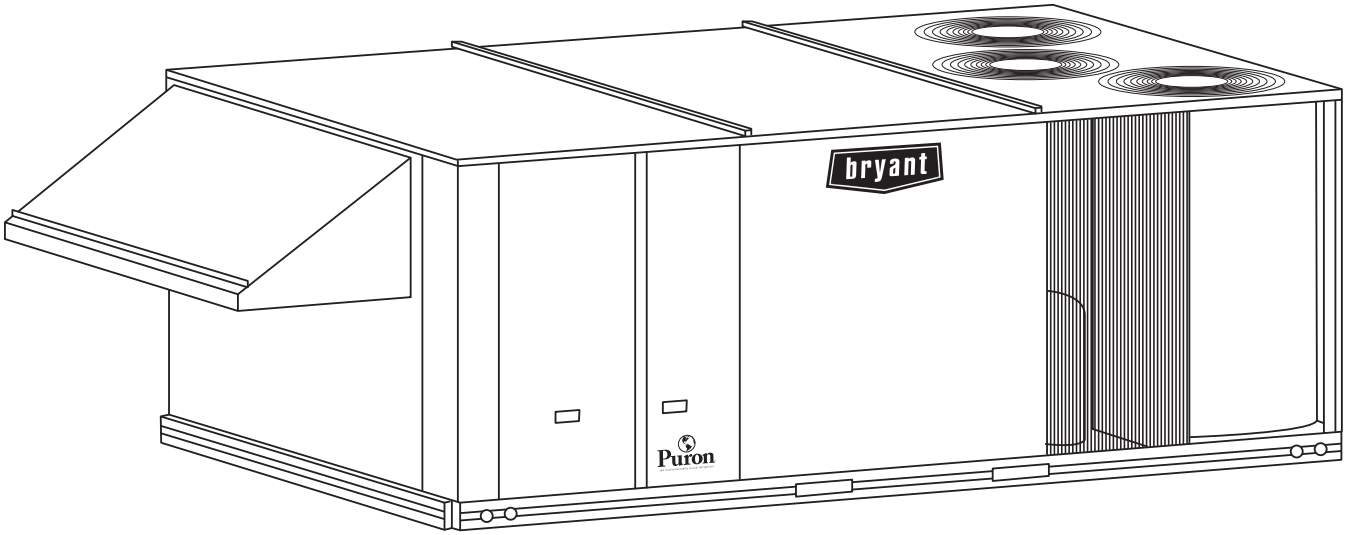

C09316

(Unit shown with optional economizer.)

C ETL LISTED US

Certified System™ ISO 9001 QMI-SAI Global

Puron™ the environmentally sound refrigerant

ASHRAE 90.1 COMPLIANT

AHRI CERTIFIED™ www.ahridirectory.org

Use of the AHRI Certified TM Mark indicates a manufacturer's participation in the program For verification of certification for individual products, go to www.ahridirectory.org.

TABLE OF CONTENTS

	PAGE
FEATURES AND BENEFITS	3
MODEL NUMBER NOMENCLATURE	4
FACTORY OPTIONS & ACCESSORIES	6
AHRI CAPACITY RATING	8
SOUND PERFORMANCE	8
PHYSICAL DATA	9
ELECTRIC HEAT-ELECTRICAL DATA	11
DIMENSIONS	13
OPTION/ACCESSORY WEIGHTS	19
APPLICATION/SELECTION DATA	20
COOLING CAPACITIES	21
HEATING CAPACITIES	23
STATIC PRESSURE TABLES	24
FAN PERFORMANCE	25
DAMPER, BAROMETRIC RELIEF & PE PERF	28
ELECTRICAL INFORMATION	29
MCA / MOCP	30
TYPICAL WIRING DIAGRAM	35
SEQUENCE OF OPERATION	37
GUIDE SPECIFICATIONS	39

548J

bryant®

Heating & Cooling Systems

Your new 15 or 20 ton Legacy Line Bryant rooftop unit (RTU) was designed by customers for customers. With a newly designed cabinet that integrates “no-strip” screw collars, handled access panels, and more, we’ve made your unit easy to install, easy to maintain and easy to use and reliable.

Easy to install:

These new Legacy Line™ units are designed for dedicated factory supplied vertical or horizontal air flow duct configurations. No special field kits are required. Designed to fit on pre-installed curbs by another manufacturer, these units also fit on past designed Bryant installed curbs with a new certified and authorized adapter curb. This new cabinet design also integrates a large control box that gives you room to work and room to mount Bryant accessory controls.

Easy to maintain:

Easy access handles by Bryant provide quick and easy access to all major, normally serviced components. Our “no-strip” screw system has superior holding power and guides screws into position while preventing the screw from stripping the unit’s metal. Take accurate pressure readings by reading condenser pressure with panels in place as compressors are strategically located to eliminate any air bypass.

Easy to use:

The newly designed, central terminal board by Bryant puts all your connections and troubleshooting points in one convenient place, standard. Most low voltage connections are made to the same board and make it easy to find what you’re looking for and easy to access it.

Reliable:

Each unit comes with precision sized and tested scroll compressor that is internally protected from over temperature and pressures. Each refrigerant circuit is further protected with a high pressure, loss of charge and freeze protection switch. In addition, a liquid line filter drier and suction line accumulator protects each circuit. Each unit is factory tested prior to shipment to help ensure units operation once properly installed.

FEATURES AND BENEFITS

- Two stage cooling capacity with independent circuits and control.
- EER's up to 10.8.
- IEER's up to 11.5.
- COP's up to 3.3.
- Dedicated vertical and horizontal air flow duct configuration models. No field kits required.
- Utility connections through the side or bottom. Bottom connections are also in an enclosed environment to help prevent water entry.
- Standardized components and control box layout. Standardized components and controls make stocking parts and service easier.
- Scroll compressors on all units with crankcase heaters. This makes service, stocking parts, replacement, and trouble-shooting easier.
- Proven Acutrol refrigerant metering system.
- 4-way reversing valve rapidly changes the flow of refrigerant to quickly changeover from cooling to heating, heating to cooling and defrost.
- Easy-adjust, belt-drive motor available. Bryant provides a factory solution for most points in the fan performance table. Motor assembly also contains a fan belt break protection system on all models and reliable pillow block bearing system that allows lubrication thru front of the unit.
- Capable of thru-the-base or thru-the-curb electrical routing.
- Full range of electric heaters and single point electric kits – pre engineered and approved for field installation.
- Single-point electrical connection.
- Sloped, composite drain pan sheds water; and won't rust.
- Standardized controls and control box layout. Standardized components and controls make stocking parts and service easier.
- Dependable time/temperature defrost logic provides a defrost cycle, if needed, every 30, 60, 90, or 120 minutes and is adjustable.
- Clean, easy to use control box.
- Color-coded wiring.
- Large, laminated wiring and power wiring drawings which are affixed to unit make troubleshooting easy.
- Single, central terminal board for test and wiring connections.
- Fast-access, handled, panels for easy access on normally accessed service panels.
- "No-strip" screw system guides screws into the panel and captures them tightly without stripping the screw, the panel, or the unit.
- Standard mechanical cooling operation from 115 F (46 C) to 30 F (-1 C) ambient temperatures. Low ambient controls are available for cooling operation below 30 F (-1 C).
- 2-in (51mm) disposable filters on all units, with 4-in (102mm) filter track - field installed.
- Refrigerant filter-drier and suction line accumulator on each circuit.
- High pressure switch, loss of charge switch and freeze protection adds greater unit reliability.
- Many factory-installed options ranging from air management economizers, 2 position dampers, manual outdoor air dampers, plus convenience outlets, disconnect switch and smoke detectors.
- Standard Parts Warranty: 5 year compressor parts, 5 year electric heater parts 1 year others.

MODEL NUMBER NOMENCLATURE

1	2	3	4	5	6	7	8	9	10	11	12	13	14	15	16	17
5	4	8	J	P	1	7	D	0	0	0	A	1	B	0	A	A

Unit Type
548J = Packaged Heat Pump with optional electric heat

Voltage
E = 460–3–60
J = 208/230–1–60
P = 208/230–3–60
T = 575–3–60

Cooling Tons
17 = 15 Ton
24 = 20 Ton

Refrig. System Options
D = Two–Stage Cooling Models

Heat Level (Field–installed electric heaters available)
000 = No Heat

Coil Options (Outdoor – Indoor – Hail Guard)
A = Al/Cu –Al/Cu
B = Precoat Al/Cu – Al/Cu
C = E–coat Al/Cu – Al/Cu
D = E–coat Al/Cu – E–coat Al/Cu
E = Cu/Cu – Al/Cu
F = Cu/Cu – Cu/Cu
M = Al/Cu – Al/Cu – Louvered Hail guards
N = Precoat Al/Cu – Al/Cu – Louvered Hail Guards
P = E coat Al/Cu – Al/Cu – Louvered Hail Guards
Q = E coat Al/Cu – E coat Al/Cu – Louvered Hail Guards
R = Cu/Cu – Al/Cu – Louvered Hail Guards
S = Cu/Cu – Cu/Cu – Louvered Hail Guards

Indoor Fan Options
1 = Standard static option, Vertical
2 = Medium static option, Vertical
3 = High static option, Vertical
B = Medium static, High eff motor option, vertical
C = High static, High eff motor option, vertical

5 = Standard static option, horizontal
6 = Medium static option, horizontal
7 = High static option, horizontal
F = Medium static, High eff motor option, horizontal
G = High static, High eff motor option, horizontal

Outdoor Air Options
A = None
B = Temp econo w/ baro relief
E = Temp econo w/ baro relief & CO_2
L = Enthalpy econo w/ baro relief & CO_2
H = Enthalpy econo w/ baro relief
P = Manual outdoor air damper
Q = Motorized 2 pos damper

Factory Installed Options
See price pages for complete list

Packaging
A = Standard

548J

Table 1 – FACTORY-INSTALLED OPTIONS AND FIELD-INSTALLED ACCESSORIES

CATEGORY	ITEM	FACTORY INSTALLED OPTION	FIELD INSTALLED ACCESSORY
Cabinet	Dedicated Vertical Air Flow Duct Configuration	X	
	Dedicated Horizontal Air Flow Duct Configuration	X	
	Thru–the–base electrical connections	X	
Coil Options	Cu/Cu (indoor and outdoor) coils	X	
	E–coated (indoor & outdoor) coils	X	
	Pre–coated (indoor & outdoor) coils	X	
Condenser Protection	Condenser coil hail guard (louvered design)	X	X
Controls	Thermostats, temperature sensors, and subbases		X
	RTU Open Multi protocol controller	X	
	Smoke detector (supply and/or return air)	X	
	Time Guard II compressor delay control circuit		X
	Phase Monitor		X
Economizers & Outdoor Air Dampers	EconoMi$er IV (for electro–mechanical controlled RTUs)	X	X
	EconoMi$er2 (for DDC controlled RTUs)	X	X
	Motorized 2 position outdoor–air damper	X	X
	Manual outdoor–air damper (25%)		X
	Barometric relief[1]	X	X
	Power exhaust	X	X
	Barometric relief hood (Horizontal economizer only)		X
Economizer Sensors & IAQ Devices	Single dry bulb temperature sensors[2]	X	X
	Differential dry bulb temperature sensors[2]		X
	Single enthalpy sensors[2]	X	X
	Differential enthalpy sensors[2]		X
	CO_2 sensor (wall, duct, or unit mounted)[3]	X	X
Electric Heat	Electric Resistance Heaters		X
	Single Point Kit		X
Indoor Motor & Drive	Multiple motor and drive packages	X	
Low Ambient Control	Motormaster head pressure controller[3]		X
Power Options	Convenience outlet (powered)	X	
	Convenience outlet (unpowered)	X	
	Non–fused disconnect	X	
Roof Curbs	Roof curb 14–in (356mm)		X
	Roof curb 24–in (610mm)		X

NOTES:
1. Included with economizer.
2. Sensors for optimizing economizer.
3. See application data for assistance.

FACTORY OPTIONS AND/OR ACCESSORIES

Economizer (dry-bulb or enthalpy)

Economizers save money. They bring in fresh, outside air for ventilation; and provide cool, outside air to cool your building. This is the preferred method of low-ambient cooling. When coupled to CO_2 sensors, Economizers can provide even more savings by coupling the ventilation air to only that amount required.

Economizers are available, installed and tested by the factory, with either enthalpy or dry-bulb temperature inputs. There are also models for electromechanical as well as direct digital controllers. Additional sensors are available as accessories to optimize the economizers.

Economizers include gravity controlled, barometric relief equalizes building pressure and ambient air pressures. This can be a cast effective solution to prevent building pressurization. If further control of exhaust air is required, a dual centrifugal fan power exhaust system is also available.

CO_2 Sensor

Improves productivity and saves money by working with the economizer to intake only the correct amount of outside air for ventilation. As occupants fill your building, the CO_2 sensor detects their presence through increasing CO_2 levels, and opens the economizer appropriately.

When the occupants leave, the CO_2 levels decrease, and the sensor appropriately closes the economizer. This intelligent control of the ventilation air, called Demand Control Ventilation (DCV) reduces the overall load on the rooftop, saving money.

Smoke Detectors

Trust the experts. Smoke detectors make your application safer and your job easier. Bryant smoke detectors immediately shut down the rooftop unit when smoke is detected. They are available, installed by the factory, for supply air, return air, or both.

Louvered Hail Guards

Sleek, louvered panels protect the condenser coil from hail damage, foreign objects, and incidental contact.

Convenience Outlet (powered or un-powered)

Reduce service and/or installation costs by including a convenience outlet in your specification. Bryant will install this service feature at our factory. Provides a convenient, 15 amp, 115v GFCI receptacle with “Wet in Use” cover. The “powered” option allows the installer to power the outlet from the line side of the disconnect as required by code. The “unpowered” option is to be powered from a separate 115/120v power source.

Non-Fused Disconnect

This OSHA-compliant, factory-installed, safety switch allows a service technician to locally secure power to the rooftop.

Power Exhaust with Barometric Relief

Superior internal building pressure control. This field-installed accessory or factory-installed option may eliminate the need for costly, external pressure control fans.

RTU Open, Multi-Protocol Controller

Connect the rooftop to an existing BAS without needing complicated translators or adapter modules using the RTU Open controller. This new controller speaks the 4 most common building automation system languages (Bacnet, Modbus, N2, and Lonworks). Use this controller when you have an existing BAS.

Time Guard II Control Circuit

This accessory protects your compressor by preventing short-cycling in the event of some other failure, prevents the compressor from restarting for 30 seconds after stopping. Not required with RTU Open or authorized commercial thermostats.

Filter or Fan Status Switches

Use these differential pressure switches to detect a filter clog or indoor fan motor failure. When used in conjunction with a compatible unit controller/thermostat, the switches will activate an alarm to warn the appropriate personnel.

Motorized 2-Position Damper

The new Bryant 2-position, motorized outdoor air damper admits up to 100% outside air. Using reliable, gear-driven technology, the 2-position damper opens to allow ventilation air and closes when the rooftop stops, stopping unwanted infiltration.

Manual OA Damper

Manual outdoor air dampers are an economical way to bring in ventilation air. The dampers are available in 25% versions.

Motormaster Head Pressure Controller

The Motormaster motor controller is a low ambient, head pressure controller kit that is designed to maintain the unit's condenser head pressure during periods of low ambient cooling operation. This device should be used as an alternative to economizer free cooling not when economizer usage is either not appropriate or desired. The Motormaster will either cycle the outdoor-fan motors or operate them at reduced speed to maintain the unit operation, depending on the model.

Alternate Motors and Drives

Some applications need larger horsepower motors, some need more airflow, and some need both. Regardless of the case, your Bryant expert has a factory installed combination to meet your application. A wide selection of motors and pulleys (drives) are available, factory installed, to handle nearly any application.

Thru-the-Base Connections

Thru-the-base connections, available as a factory option, are necessary to ensure proper connection and seal when routing wire and piping through the rooftop's basepan and curb. These couplings eliminate roof penetration and should be considered for main power lines, as well as control power.

Electric Heaters / Single Point Kit

Bryant offers a full-line of field-installed accessory heaters and single point kits when required. The heaters are very easy to use, install and are all pre-engineered and certified.

Barometric Hood

For Horizontal Economizer applications where relief damper is installed in duct work. This kit provides the needed protection.

TABLE 2 – AHRI COOLING RATING TABLE 2-STAGE COOLING

COOLING MODE					
UNIT	NOM. CAPACITY (TONS)	NET COOLING CAPACITY (BTUH)	TOTAL POWER (kW)	EER	IEER
17	15	172,000	14.6	10.8	11.5
24	20	232,000	20.5	10.5	11.3

HEATING MODE				
UNIT	HEATING, LOW (BTUH)		HEATING, HIGH (BTUH)	
	CAPACITY (BTUH)	COP	CAPACITY (BTUH)	COP
17	103,000	2.4	166,000	3.3
24	134,000	2.3	220,000	3.3

LEGEND

AHRI – Air Conditioning, Heating and Refrigeration Institute
ASHRAE – American Society of Heating, Refrigerating and Air Conditioning, Inc.
COP – Coefficient of performance
EER – Energy Efficiency Ratio
IEER – Integrated Energy Efficiency

NOTES

1. Rated and certified under AHRI Standard 340/360, as appropriate.
2. Ratings are based on:
   Cooling Standard: 80°F (27°C) db, 67°F (19°C) wb indoor air temp and 95°F db outdoor air temp.
   IEER Standard: A measure that expresses cooling part–load EER efficiency for commercial unitary air conditioning and heat pump equipment on the basis of weighted operation at various load capacities.
3. All 548J units comply with ASHRAE 90.1 Energy Standard for minimum EER and IEER requirements.
4. Where appropriate, 548J units comply with US Energy Policy Act (2005). Refer to state and local codes or visit the following website: http://bcap–energy. org to determine if compliance with this standard pertains to your state, territory, or municipality.

548J

Table 3 – SOUND PERFORMANCE TABLE

MODEL SIZE	COOLING STAGES	OUTDOOR SOUND (dB)									
		A–Wtg.	AHRI 370 Rating	63	125	250	500	1000	2000	4000	8000
17	2	84.1	84	92.2	83.9	80.4	81.8	78.7	76.5	72.2	65.4
24	2	86.5	87	95.6	87.5	84.2	84.2	81.7	77.9	73.2	66.3

LEGEND

dB – Decibel

NOTES:

1. Outdoor sound data is measure in accordance with AHRI standard 270–2008.
2. Measurements are expressed in terms of sound power. Do not compare these values to sound pressure values because sound pressure accounts for specific environmental factors which do not match individual applications. Sound power values are independent of the environment and therefore more accurate.
3. A–weighted sound ratings filter out very high and very low frequencies, to better approximate the response of an “average” human ear. A–weighted measurements for Bryant units are taken in accordance with 270–2008.

Table 4 – PHYSICAL DATA (COOLING) 15 and 20 TONS

		548J17	548J24
Refrigeration System			
	# Circuits / # Comp. / Type	2 / 2 / Scroll	2 / 2 / Scroll
	R–410a charge A/B (lbs)	16.0/16.5	23.4/23.4
	High–press. Trip / Reset (psig)	630 / 505	630 / 505
	Low–press. Trip / Reset (psig)	24 / 45	24 / 45
	Compressor Capacity Staging (%)	50 / 100	50 / 100
Evap. Coil			
Material		Cu / Al	Cu / Al
Tube Diameter		3/8–in	3/8–in
Rows / FPI		3 / 15	4 / 15
Total face area (ft2)		19.56	22.00
Condensate drain conn. size		3/4–in	3/4–in
Evap. fan and motor VERTICAL			
Standard Static	Motor Qty / Drive type	1 / Belt	1 / Belt
	Max BHP	2.2	4.9
	RPM range	514–680	690–863
	Motor frame size	56	56
	Fan Qty / Type	2 / Centrifugal	2 / Centrifugal
	Fan Diameter (in)	15 x 15	15 x 15
Medium Static	Motor Qty / Drive type	1 / Belt	1 / Belt
	Max BHP	3.3	6.5
	RPM range	679–863	835–1021
	Motor frame size	56	184T
	Fan Qty / Type	2 / Centrifugal	2 / Centrifugal
	Fan Diameter (in)	15 x 15	15 x 15
High Static	Motor Qty / Drive type	1 / Belt	1 / Belt
	Max BHP	4.9	8.7
	RPM range	826–1009	941–1176
	Motor frame size	56	213T
	Fan Qty / Type	2 / Centrifugal	2 / Centrifugal
	Fan Diameter (in)	15 x 15	15 x 15
Medium Static High Eff*	Motor Qty / Drive type	n/a	1 / Belt
	Max BHP	n/a	6.5
	RPM range	n/a	835–1021
	Motor frame size	n/a	184T
	Fan Qty / Type	n/a	2 / Centrifugal
	Fan Diameter (in)	n/a	15 x 15
High Static High Eff*	Motor Qty / Drive type	n/a	1 / Belt
	Max BHP	n/a	8.7
	RPM range	n/a	941–1176
	Motor frame size	n/a	213T
	Fan Qty / Type	n/a	2 / Centrifugal
	Fan Diameter (in)	n/a	15 x 15

* Section 313 of the Energy Independence and Security Act of 2007 (EISA 2007) mandates that the efficiency of general purpose motors we use in our Light Commercial Rooftops rated at 5.0 HP and larger be increased on or after December 19, 2010. We will offer both high and standard efficient motors until inventory is depleted and then shift over solely to the high efficient motors only.

Table 4 – PHYSICAL DATA (cont.) (COOLING) 15 and 20 TONS

		548J17	548J24
HORIZONTAL			
Standard Static	Motor Qty / Drive type	1 / Belt	1 / Belt
	Max BHP	2.2	4.9
	RPM range	514 – 680	690 – 863
	Motor frame size	56	56
	Fan Qty / Type	2 / Centrifugal	2 / Centrifugal
	Fan Diameter (in)	18 x 15/15 X 11	18 x 15/15 X 11
Medium Static	Motor Qty / Drive type	1 / Belt	1 / Belt
	Max BHP	3.3	6.5
	RPM range	614 – 780	835 – 1021
	Motor frame size	56	184T
	Fan Qty / Type	2 / Centrifugal	2 / Centrifugal
	Fan Diameter (in)	18 x 15/15 X 11	18 x 15/15 X 11
High Static	Motor Qty / Drive type	1 / Belt	1 / Belt
	Max BHP	4.9	8.7
	RPM range	746 – 912	941 – 1176
	Motor frame size	56	213T
	Fan Qty / Type	2 / Centrifugal	2 / Centrifugal
	Fan Diameter (in)	18 x 15/15 X 11	18 x 15/15 X 11
Medium Static High Eff*	Motor Qty / Drive type	n/a	1 / Belt
	Max BHP	n/a	6.5
	RPM range	n/a	814 – 1021
	Motor frame size	n/a	184T
	Fan Qty / Type	n/a	2 / Centrifugal
	Fan Diameter (in)	n/a	15 x 15
High Static High Eff*	Motor Qty / Drive type	n/a	1 / Belt
	Max BHP	n/a	8.7
	RPM range	n/a	941 – 1176
	Motor frame size	n/a	213T
	Fan Qty / Type	n/a	2 / Centrifugal
	Fan Diameter (in)	n/a	15 x 15
Cond. Coil (Circuit A)			
	Coil type	RTPF	RTPF
	Coil Length (in)	70	82
	Coil Height (in)	44	44
	Rows / FPI	2 Rows / 17 FPI	2 Rows / 17 FPI
	Total face area (ft2)	21.4	25.1
Cond. Coil (Circuit B)			
	Coil type	RTPF	RTPF
	Coil Length (in)	70	82
	Coil Height (in)	44	44
	Rows / FPI	2 Rows / 17 FPI	2 Rows / 17 FPI
	Total face area (ft2)	21.4	25.1
Cond. fan / motor			
	Qty / Motor drive type	3 / direct	4 / direct
	Motor HP / RPM	1/4 / 1100	1/4 / 1100
	Fan diameter (in)	22	22
Filters			
	RA Filter # / size (in)	6 / 20 x 25 x 2	6 / 20 x 25 x 2
	OA inlet screen # / size (in)	4 / 16 x 25 x 1	4 / 16 x 25 x 1

RTPF – Round tube / plate fin design

* Section 313 of the Energy Independence and Security Act of 2007 (EISA 2007) mandates that the efficiency of general purpose motors we use in our Light Commercial Rooftops rated at 5.0 HP and larger be increased on or after December 19, 2010. We will offer both high and standard efficient motors until inventory is depleted and then shift over solely to the high efficient motors only.

Table 5 – ELECTRIC HEAT - ELECTRICAL DATA 15 and 20 TONS

UNIT	NOM. V–PH–HZ	IFM TYPE	ELECTRIC HEATER PART NUMBER CRHEATER	NOMINAL (KW)	APPLICATION (KW)	APPLICATION OUTPUT (MBH)
548J–17D	208/230–3–60	STD	279A00 / 270A00	25.0	18.8/23.0	64.1/78.3
			280A00 / 271A00	50.0	37.6/45.9	128.1/156.7
			281A00 / 272A00	75.0	56.3/68.9	192.2/235.0
		MED	279A00 / 270A00	25.0	18.8/23.0	64.1/78.3
			280A00 / 271A00	50.0	37.6/45.9	128.1/156.7
			281A00 / 272A00	75.0	56.3/68.9	192.2/235.0
		HIGH	279A00 / 270A00	25.0	18.8/23.0	64.1/78.3
			280A00 / 271A00	50.0	37.6/45.9	128.1/156.7
			281A00 / 272A00	75.0	56.3/68.9	192.2/235.0
	460–3–60	STD	282A00 / 273A00	25.0	23.0	78.3
			283A00 / 274A00	50.0	45.9	156.7
			284A00 / 275A00	75.0	68.9	235.0
		MED	282A00 / 273A00	25.0	23.0	78.3
			283A00 / 274A00	50.0	45.9	156.7
			284A00 / 275A00	75.0	68.9	235.0
		HIGH	282A00 / 273A00	25.0	23.0	78.3
			283A00 / 274A00	50.0	45.9	156.7
			284A00 / 275A00	75.0	68.9	235.0
	575–3–60	STD	285A00 / 276A00	24.8	22.8	77.7
			286A00 / 277A00	49.6	45.6	155.4
			287A00 / 278A00	74.4	68.3	233.1
		MED	285A00 / 276A00	24.8	22.8	77.7
			286A00 / 277A00	49.6	45.6	155.4
			287A00 / 278A00	74.4	68.3	233.1
		HIGH	285A00 / 276A00	24.8	22.8	77.7
			286A00 / 277A00	49.6	45.6	155.4
			287A00 / 278A00	74.4	68.3	233.1

LEGEND

APP PWR – 208 / 230V / 460V / 575V
C.O. – Convenient outlet
FLA – Full load amps
IFM – Indoor fan motor
NOM PWR – 240V / 480V / 600V
P.E. – Power exhaust
PWRD – Powered convenient outlet
UNPWRD – Unpowered convenient outlet

Table 5 - ELECTRIC HEAT - ELECTRICAL DATA (con't) **15 and 20 TONS**

UNIT	NOM. V–PH–HZ	IFM TYPE	ELECTRIC HEATER PART NUMBER CRHEATER	NOMINAL (KW)	APPLICATION (KW)	APPLICATION OUTPUT (MBH)
548J–24D	208/230–3–60	STD	279A00 / 270A00	25.0	18.8/23.0	64.1/78.3
			280A00 / 271A00	50.0	37.6/45.9	128.1/156.7
			281A00 / 272A00	75.0	56.3/68.9	192.2/235.0
		MED	279A00 / 270A00	25.0	18.8/23.0	64.1/78.3
			280A00 / 271A00	50.0	37.6/45.9	128.1/156.7
			281A00 / 272A00	75.0	56.3/68.9	192.2/235.0
		HIGH	279A00 / 270A00	25.0	18.8/23.0	64.1/78.3
			280A00 / 271A00	50.0	37.6/45.9	128.1/156.7
			281A00 / 272A00	75.0	56.3/68.9	192.2/235.0
		MED–High Eff	279A00 / 270A00	25.0	18.8/23.0	64.1/78.3
			280A00 / 271A00	50.0	37.6/45.9	128.1/156.7
			281A00 / 272A00	75.0	56.3/68.9	192.2/235.0
		HIGH–High Eff	279A00 / 270A00	25.0	18.8/23.0	64.1/78.3
			280A00 / 271A00	50.0	37.6/45.9	128.1/156.7
			281A00 / 272A00	75.0	56.3/68.9	192.2/235.0
	460–3–60	STD	282A00 / 273A00	25.0	23.0	78.3
			283A00 / 274A00	50.0	45.9	156.7
			284A00 / 275A00	75.0	68.9	235.0
		MED	282A00 / 273A00	25.0	23.0	78.3
			283A00 / 274A00	50.0	45.9	156.7
			284A00 / 275A00	75.0	68.9	235.0
		HIGH	282A00 / 273A00	25.0	23.0	78.3
			283A00 / 274A00	50.0	45.9	156.7
			284A00 / 275A00	75.0	68.9	235.0
		MED–High Eff	282A00 / 273A00	25.0	23.0	78.3
			283A00 / 274A00	50.0	45.9	156.7
			284A00 / 275A00	75.0	68.9	235.0
		HIGH–High Eff	282A00 / 273A00	25.0	23.0	78.3
			283A00 / 274A00	50.0	45.9	156.7
			284A00 / 275A00	75.0	68.9	235.0
	575–3–60	STD	285A00 / 276A00	24.8	22.8	77.7
			286A00 / 277A00	49.6	45.6	155.4
			287A00 / 278A00	74.4	68.3	233.1
		MED	285A00 / 276A00	24.8	22.8	77.7
			286A00 / 277A00	49.6	45.6	155.4
			287A00 / 278A00	74.4	68.3	233.1
		HIGH	285A00 / 276A00	24.8	22.8	77.7
			286A00 / 277A00	49.6	45.6	155.4
			287A00 / 278A00	74.4	68.3	233.1
		MED–High Eff	285A00 / 276A00	24.8	22.8	77.7
			286A00 / 277A00	49.6	45.6	155.4
			287A00 / 278A00	74.4	68.3	233.1
		HIGH–High Eff	285A00 / 276A00	24.8	22.8	77.7
			286A00 / 277A00	49.6	45.6	155.4
			287A00 / 278A00	74.4	68.3	233.1

DIMENSIONS

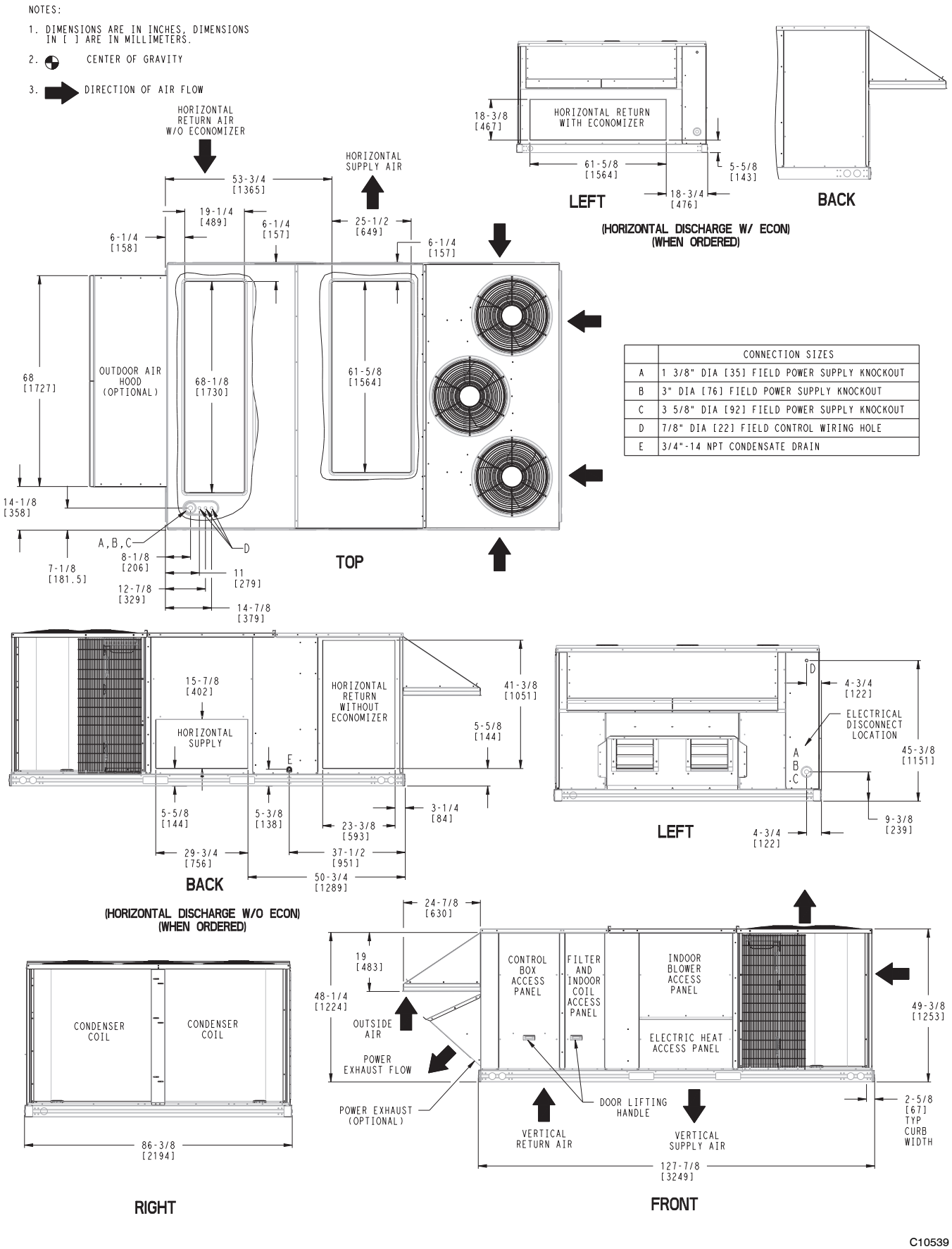

	CONNECTION SIZES
A	1 3/8" DIA [35] FIELD POWER SUPPLY KNOCKOUT
B	3" DIA [76] FIELD POWER SUPPLY KNOCKOUT
C	3 5/8" DIA [92] FIELD POWER SUPPLY KNOCKOUT
D	7/8" DIA [22] FIELD CONTROL WIRING HOLE
E	3/4"-14 NPT CONDENSATE DRAIN

Fig. 1 - Dimensions 548J-17

DIMENSIONS (cont.)

UNIT	STD UNIT WEIGHT *		CORNER WEIGHT (A)		CORNER WEIGHT (B)		CORNER WEIGHT (C)		CORNER WEIGHT (D)		C.G.		
	LBS.	KG.	LBS.	KG.	LBS.	KG.	LBS.	KG.	LBS.	KG.	X	Y	Z
548J17	1775	807	479	218	364	166	403	183	530	241	45 1/4 [1149]	55 1/4 [1403]	16 1/2 [419]

* STANDARD UNIT WEIGHT IS WITHOUT ELECTRIC HEAT AND WITHOUT PACKAGING.
FOR OTHER OPTIONS AND ACCESSORIES, REFER TO THE PRODUCT DATA CATALOG.

548J

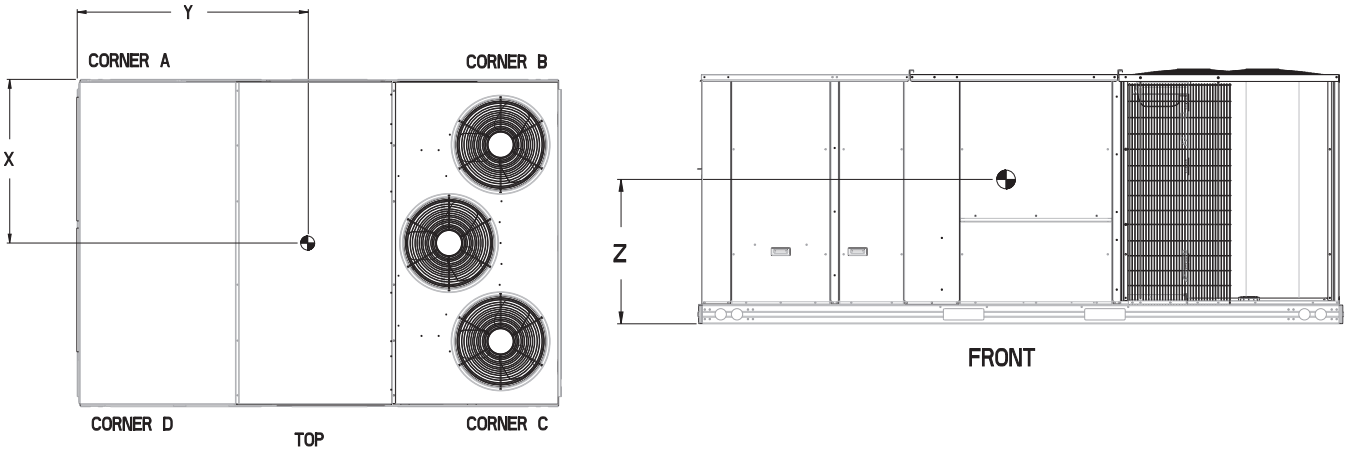

C11088

Fig. 2 - Dimensions 548J-17

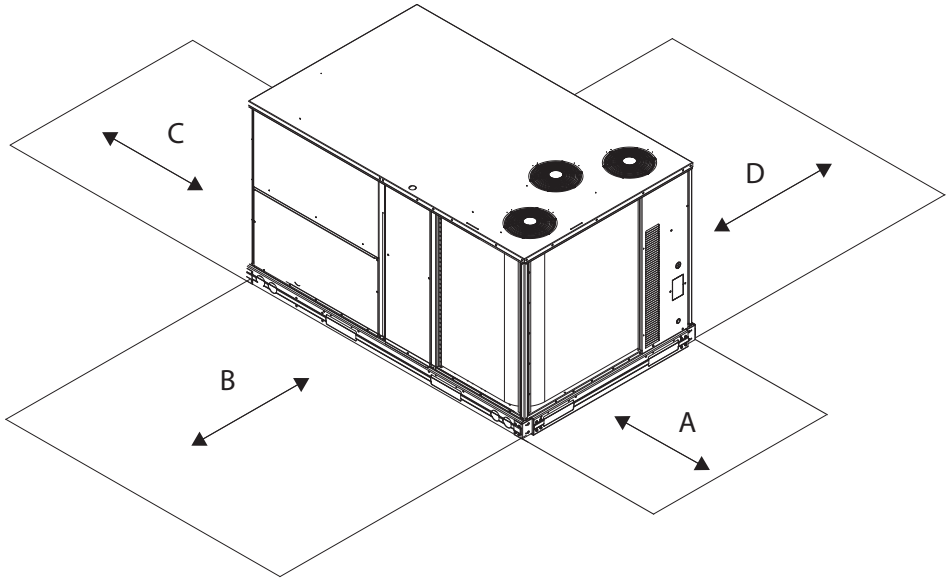

C10578

Fig. 3 - Service Clearance

LOC	DIMENSION	CONDITION
A	48–in. (1219 mm)	Unit disconnect is mounted on panel
	18–in. (457 mm)	No disconnect, convenience outlet option
	18–in. (457 mm)	Recommended service clearance
	12–in. (305 mm)	Minimum clearance
B	42–in. (1067 mm)	Surface behind servicer is grounded (e.g., metal, masonry wall)
	36–in. (914 mm)	Surface behind servicer is electrically non–conductive (e.g., wood, fiberglass)
	Special	Check for sources of flue products within 10–ft of unit fresh air intake hood
C	36–in. (914 mm)	Side condensate drain is used
	18–in. (457 mm)	Minimum clearance
D	42–in. (1067 mm)	Surface behind servicer is grounded (e.g., metal, masonry wall, another unit)
	36–in. (914 mm)	Surface behind servicer is electrically non–conductive (e.g., wood, fiberglass)

DIMENSIONS (cont.)

UNIT SIZE	"A"	ROOF CURB ACCESSORY
17	1′-2" [356.0] 2′-0" [610.0]	CRRFCURB045A00 CRRFCURB046A00

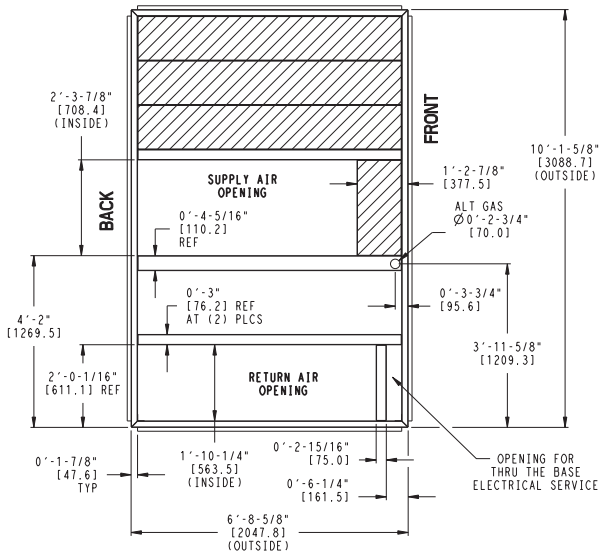

NOTES:

1 ROOF CURB ACCESSORY IS SHIPPED UNASSEMBLED.

2 DIMENSIONS IN [ ] ARE IN MILLIMETERS.

3 ROOF CURB GALVANIZED STEEL.

4 ATTACH DUCTWORK TO CURB (FLANGES ON DUCT REST ON CURB)

5 SERVICE CLEARANCE 4 ft ON EACH SIDE

DIRECTION OF AIR FLOW

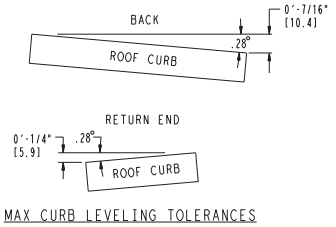

MAX CURB LEVELING TOLERANCES

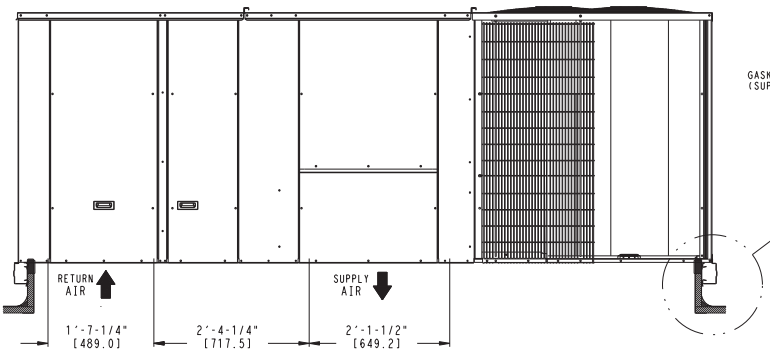

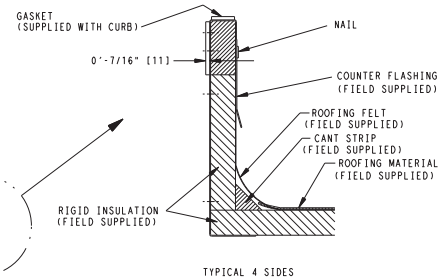

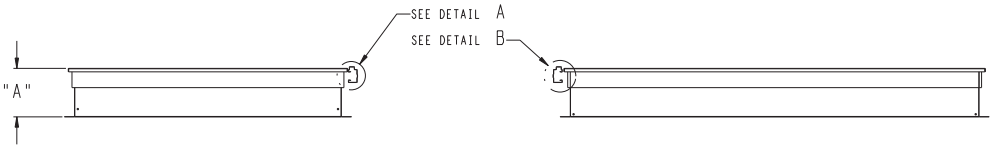

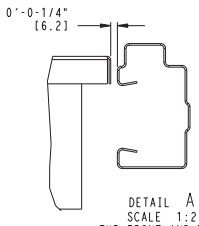

DETAIL A
SCALE 1:2
TYP FRONT AND BACK

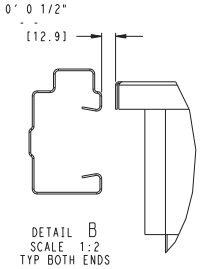

DETAIL B
SCALE 1:2
TYP BOTH ENDS

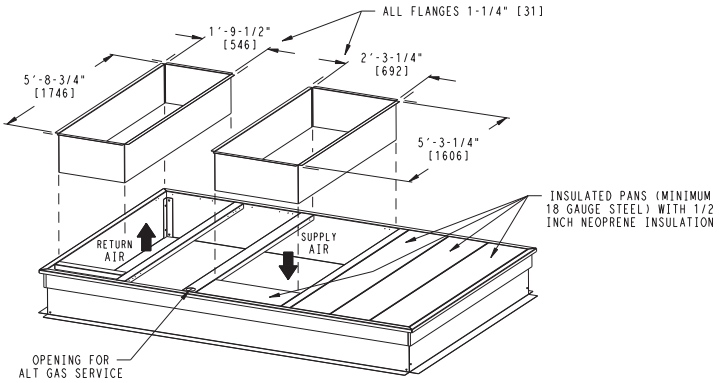

C10139

Fig. 4 - Roof Curb Dimensions - 548J-17

548J

DIMENSIONS (cont.)

548J

NOTES:

1. DIMENSIONS ARE IN INCHES, DIMENSIONS IN [ ] ARE IN MILLIMETERS.
2. CENTER OF GRAVITY
3. DIRECTION OF AIR FLOW

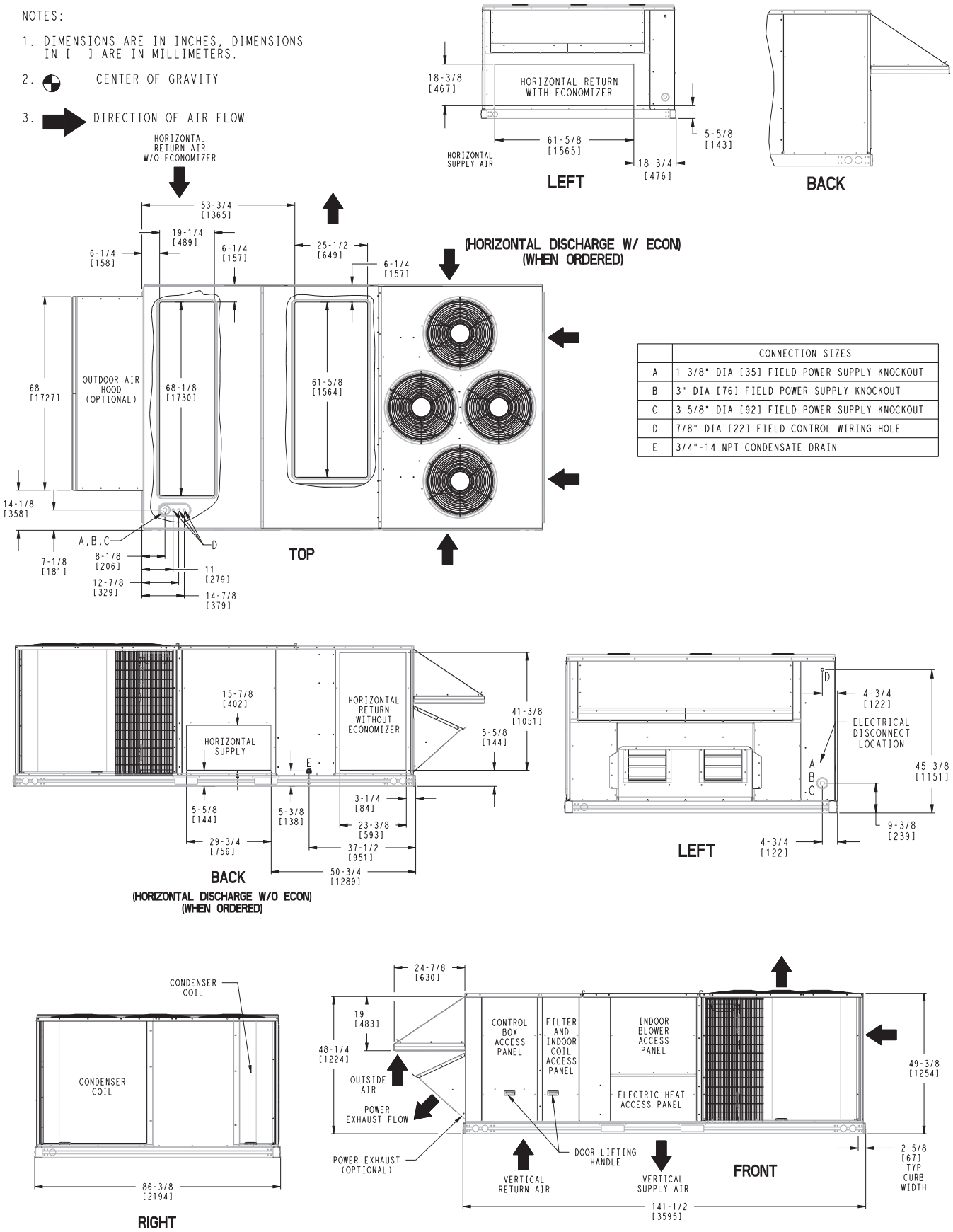

	CONNECTION SIZES
A	1 3/8" DIA [35] FIELD POWER SUPPLY KNOCKOUT
B	3" DIA [76] FIELD POWER SUPPLY KNOCKOUT
C	3 5/8" DIA [92] FIELD POWER SUPPLY KNOCKOUT
D	7/8" DIA [22] FIELD CONTROL WIRING HOLE
E	3/4"-14 NPT CONDENSATE DRAIN

Fig. 5 - Dimensions 548J-24

DIMENSIONS (cont.)

UNIT	STD UNIT WEIGHT *		CORNER WEIGHT (A)		CORNER WEIGHT (B)		CORNER WEIGHT (C)		CORNER WEIGHT (D)		C.G.		
	LBS.	KG.	LBS.	KG.	LBS.	KG.	LBS.	KG.	LBS.	KG.	X	Y	Z
548J24	2100	955	534	243	517	235	516	235	533	242	43 [1092]	69 1/2 [1765]	16.5 [419]

* STANDARD UNIT WEIGHT IS WITHOUT ELECTRIC HEAT AND WITHOUT PACKAGING.
FOR OTHER OPTIONS AND ACCESSORIES, REFER TO THE PRODUCT DATA CATALOG.

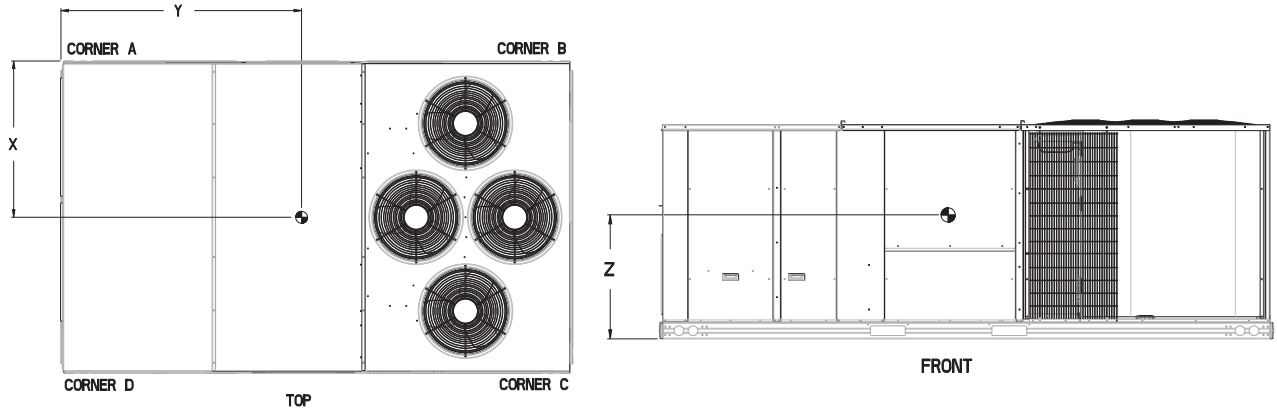

C11089

Fig. 6 - Dimensions 548J24

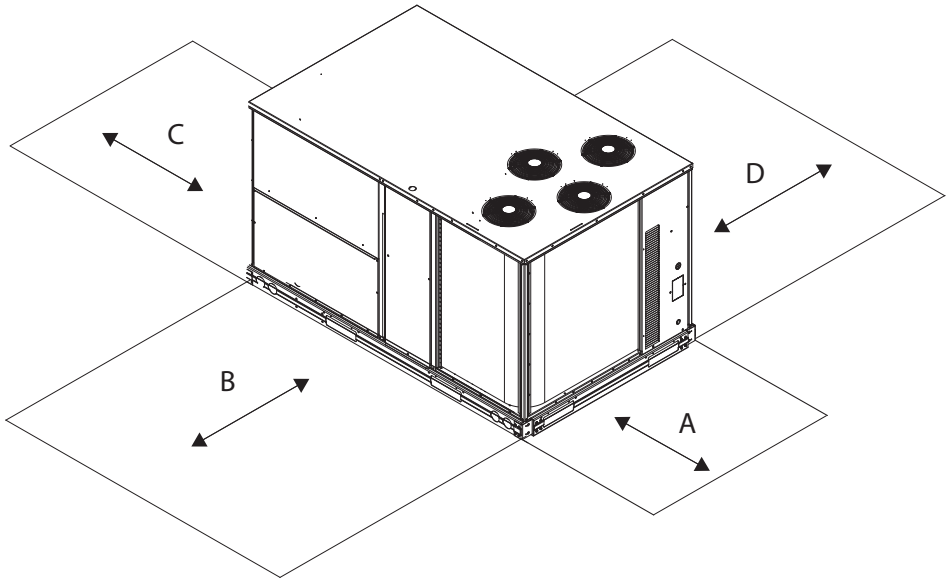

C10579

Fig. 7 - Service Clearance

LOC	DIMENSION	CONDITION
A	48–in. (1219 mm)	Unit disconnect is mounted on panel
	18–in. (457 mm)	No disconnect, convenience outlet option
	18–in. (457 mm)	Recommended service clearance
	12–in. (305 mm)	Minimum clearance
B	42–in. (1067 mm)	Surface behind servicer is grounded (e.g., metal, masonry wall)
	36–in. (914 mm)	Surface behind servicer is electrically non–conductive (e.g., wood, fiberglass)
	Special	Check for sources of flue products within 10–ft of unit fresh air intake hood
C	36–in. (914 mm)	Side condensate drain is used
	18–in. (457 mm)	Minimum clearance
D	42–in. (1067 mm)	Surface behind servicer is grounded (e.g., metal, masonry wall, another unit)
	36–in. (914 mm)	Surface behind servicer is electrically non–conductive (e.g., wood, fiberglass)

DIMENSIONS (cont.)

UNIT SIZE	"A"	ROOF CURB ACCESSORY
24	1′-2" [356.0] 2′-0" [610.0]	CRRFCURB047A00 CRRFCURB048A00

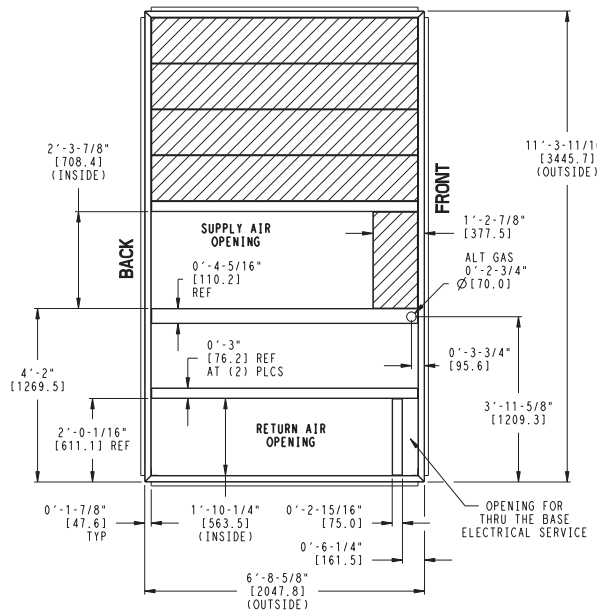

NOTES:

1 ROOF CURB ACCESSORY IS SHIPPED UNASSEMBLED.

2 DIMENSIONS IN [ ] ARE IN MILLIMETERS.

3 ROOF CURB GALVANIZED STEEL.

4 ATTACH DUCTWORK TO CURB (FLANGES ON DUCT REST ON CURB)

5 SERVICE CLEARANCE 4 ft ON EACH SIDE

DIRECTION OF AIR FLOW

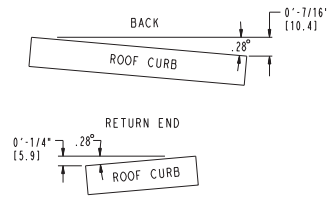

MAX CURB LEVELING TOLERANCES

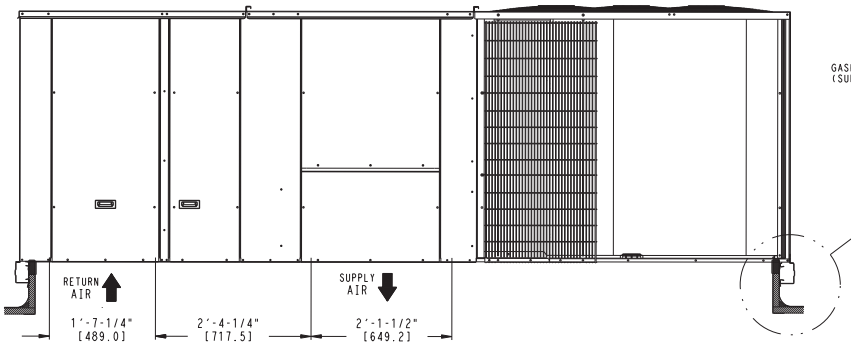

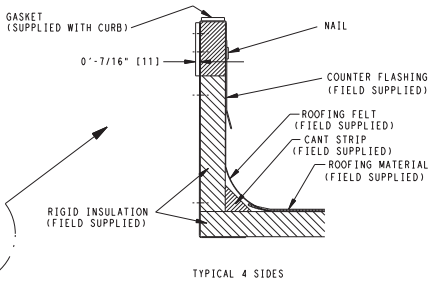

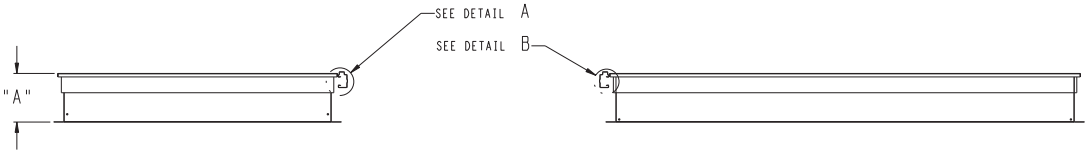

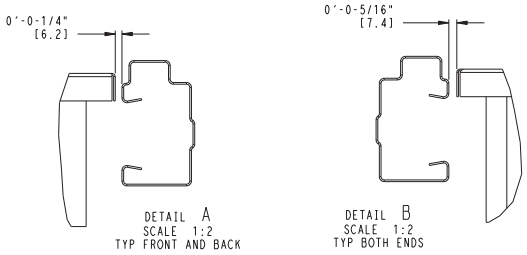

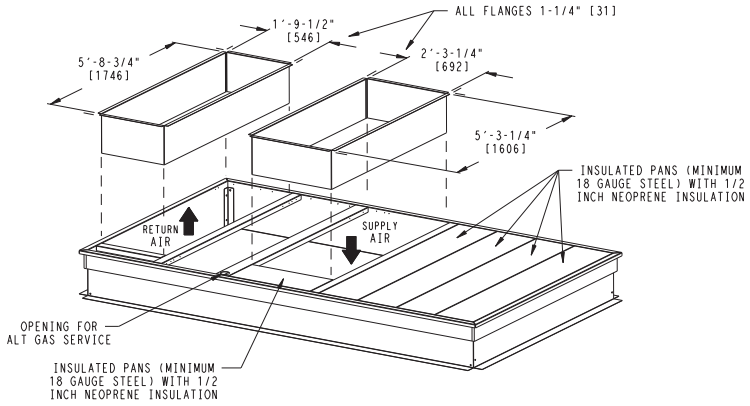

C10140

Fig. 8 – Roof Curb Dimensions 548J-24

OPTION / ACCESSORY WEIGHTS

BASE UNIT WITH OPTIONS AND ACCESSORIES (Weight Adders)	MAX WEIGHT ADD			
	548J*17		548J*24	
	lb	kg	lb	kg
Power Exhaust	125	57	125	57
Economizer	170	77	170	77
Copper Tube/Fin Evaporator Coil	110	50	135	61
Roof Curb (14 inch)	240	109	240	109
Roof Curb (24 inch)	340	154	340	154
Louvered Hail Guard	60	27	120	54
CO_2 sensor	5	2	5	2
Return Smoke Detector	5	2	5	2
Supply Smoke Detector	5	2	5	2
Fan/Filter Status Switch	2	1	2	1
Non–Fused Disconnect	15	7	15	7
Powered Convenience outlet	35	16	35	16
Non–Powered Convenience outlet	5	2	5	2
Enthalpy Sensor	2	1	2	1
Differential Enthalpy Sensor	3	1	3	1
Two Position Motorized Damper	50	23	50	23
Manual Damper	35	16	35	16
4–in Field Filter Track	12	5	12	5
MotorMaster Controller	35	16	35	16
Medium Static Motor/Drive	5	2	6	3
High Static Motor/Drive	11	5	16	7

NOTE: Where multiple variations are available, the heaviest combination is listed.

Min operating ambient temp (cooling):

In mechanical cooling mode, your Bryant rooftop can safely operate down to an outdoor ambient temperature of 30°F (-1°C). It is possible to provide cooling at lower outdoor ambient temperatures by using less outside air, economizers, and/or accessory low ambient kits.

Max operating ambient temp (cooling):

The maximum operating ambient temperature for cooling mode is 115°F (46°C). While cooling operation above 115°F (46°C) may be possible, it could cause either a reduction in performance, reliability, or a protective action by the unit's internal safety devices.

Min and max airflow (cooling mode):

To maintain safe and reliable operation of your rooftop, operate within the cooling airflow limits. Operating above the max may cause blow-off, undesired airflow noise, or airflow related problems with the rooftop unit. Operating below the min may cause problems with coil freeze-up.

Airflow:

All units are draw-though in cooling mode.

Outdoor air application strategies:

Economizers reduce operating expenses and compressor run time by providing a free source of cooling and a means of ventilation to match application changing needs. In fact, they should be considered for most applications. Also, consider the various economizer control methods and their benefits, as well as sensors required to accomplish your application goals. Please contact your local Bryant representative for assistance.

Motor limits, break horsepower (BHP):

Due to Bryant's internal unit design, air path, and specially designed motors, the full horsepower (maximum continuous BHP) band, as listed in the Physical Data, can be used with the utmost confidence. There is no need for extra safety factors, as Bryant's motors are designed and rigorously tested to use the entire, listed BHP range without either nuisance tripping or premature motor failure.

Sizing a rooftop

Bigger isn't necessarily better. While an air conditioner needs to have enough capacity to meet the load, it doesn't need excess capacity. In fact, having excess capacity typically results in very poor part load performance and humidity control.

Using higher design temperatures than ASHRAE recommends for your location, adding "safety factors" to the calculated load, and rounding up to the next largest unit, are all signs of oversizing air conditioners. Oversizing can cause short-cycling, and short cycling leads to poor humidity control, reduced efficiency, higher utility bills, drastic indoor temperature swings, excessive noise, and increased wear and tear on the air conditioner.

Rather than oversizing an air conditioner, wise contractors and engineers "right-size" or even slightly undersize air conditioners. Correctly sizing an air conditioner controls humidity better; promotes efficiency; reduces utility bills; extends equipment life, and maintains even, comfortable temperatures.

Low ambient applications

When equipped with a Bryant economizer, your rooftop unit can cool your space by bringing in fresh, cool outside air. In fact, when so equipped, accessory low-ambient kit may not be necessary. In low ambient conditions, unless the outdoor air is excessively humid or contaminated, economizer-based "free cooling" is the preferred less costly and energy conscious method.

In low ambient applications where outside air might not be desired (such as contaminated or excessively humid outdoor environments), your Bryant rooftop can operate to ambient temperatures down to -20°F (-29°C) using the recommended accessory Motormaster low ambient controller.

Application/Selection Option

Selection software by Bryant saves time by performing many of the steps above. Contact your Bryant sales representative for assistance.

TABLE 6 – COOLING CAPACITIES 2-STAGE COOLING 15 TONS

548J–17				AMBIENT TEMPERATURE											
				85			95			105			115		
				EA (db)			EA (db)			EA (db)			EA (db)		
				75	80	85	75	80	85	75	80	85	75	80	85
4500 CFM	EAT (wb)	58	TC	152.7	153.6	161.2	145.9	147.8	155.6	138.8	141.9	149.5	131.2	135.6	143.0
			SHC	135.5	153.6	161.2	132.0	147.8	155.6	128.4	141.9	149.5	124.4	135.6	143.0
		62	TC	164.1	163.9	164.2	156.9	156.7	157.1	149.2	149.0	150.0	141.0	140.8	143.1
			SHC	118.5	139.2	158.6	115.2	135.9	155.1	111.7	132.3	150.0	108.1	128.4	143.1
		67	TC	179.4	179.2	179.0	171.6	171.4	171.1	163.2	162.9	162.7	154.2	154.0	153.6
			SHC	96.7	117.5	138.3	93.5	114.3	135.0	90.0	110.8	131.6	86.5	107.2	127.9
		72	TC	195.8	195.6	195.3	187.2	187.0	186.7	178.0	177.8	177.5	168.2	167.9	167.6
			SHC	74.1	95.4	116.2	71.1	92.1	113.0	67.9	88.8	109.6	64.5	85.2	106.0
		76	TC	–	209.5	209.2	–	200.2	199.9	–	190.2	190.0	–	179.6	179.3
			SHC	–	77.4	98.2	–	74.2	95.0	–	70.9	91.7	–	67.4	88.2
5250 CFM	EAT (wb)	58	TC	157.5	161.1	169.6	150.4	155.2	163.5	143.0	148.9	156.9	135.1	142.0	149.8
			SHC	146.1	161.1	169.6	142.4	155.2	163.5	138.2	148.9	156.9	133.5	142.0	149.8
		62	TC	169.1	168.8	170.2	161.5	161.2	163.7	153.3	153.2	157.1	144.6	144.6	149.9
			SHC	127.1	150.6	170.2	123.7	147.0	163.7	120.1	143.1	157.1	116.4	138.7	149.9
		67	TC	184.7	184.4	184.1	176.3	176.1	175.7	167.5	167.2	166.8	158.0	157.7	157.3
			SHC	102.2	126.0	149.7	98.9	122.6	146.3	95.4	119.1	142.7	91.7	115.4	138.8
		72	TC	201.2	201.0	200.7	192.1	191.9	191.5	182.4	182.2	181.8	172.1	171.8	171.3
			SHC	77.0	100.7	124.5	73.7	97.4	121.2	70.3	94.0	117.8	66.7	90.4	114.1
		76	TC	–	215.0	214.7	–	205.1	204.8	–	194.7	194.3	–	183.5	183.1
			SHC	–	80.3	104.1	–	77.0	100.8	–	73.7	97.4	–	70.1	93.9
6000 CFM	EAT (wb)	58	TC	161.4	167.8	176.7	154.1	161.5	170.2	146.9	154.7	163.1	139.3	147.4	155.5
			SHC	155.5	167.8	176.7	151.8	161.5	170.2	145.6	154.7	163.1	139.3	147.4	155.5
		62	TC	172.9	172.7	176.9	164.9	164.9	170.3	156.4	156.7	163.3	147.4	148.2	155.6
			SHC	135.1	160.8	176.9	131.7	156.8	170.3	128.0	152.3	163.3	124.2	146.4	155.6
		67	TC	188.7	188.3	187.9	180.0	179.6	179.2	170.7	170.4	170.0	160.9	160.5	160.2
			SHC	107.3	133.9	160.4	103.9	130.5	156.8	100.4	126.9	152.9	96.6	123.2	148.7
		72	TC	205.4	205.1	204.7	195.9	195.6	195.1	185.8	185.5	185.0	175.1	174.7	174.2
			SHC	79.1	105.7	132.4	75.8	102.4	129.0	72.3	98.9	125.5	68.7	95.2	121.8
		76	TC	–	219.2	218.9	–	209.0	208.5	–	198.0	197.6	–	186.5	186.0
			SHC	–	82.9	109.6	–	79.7	106.3	–	76.2	102.8	–	72.7	99.2
6750 CFM	EAT (wb)	58	TC	165.1	173.4	182.8	158.0	166.8	175.9	150.9	159.6	168.4	143.5	151.9	160.3
			SHC	163.2	173.4	182.8	158.0	166.8	175.9	150.9	159.6	168.4	143.5	151.9	160.3
		62	TC	176.0	176.2	182.9	167.7	168.2	176.0	158.9	160.0	168.5	149.6	152.0	160.4
			SHC	142.8	169.9	182.9	139.3	165.7	176.0	135.6	160.0	168.5	131.6	152.0	160.4
		67	TC	191.9	191.5	191.1	182.9	182.5	182.1	173.3	172.9	172.7	163.2	162.7	162.8
			SHC	112.2	141.5	170.3	108.7	138.1	166.5	105.1	134.4	162.2	101.3	130.6	157.1
		72	TC	208.8	208.4	207.9	198.9	198.5	198.0	188.5	188.1	187.5	177.4	177.0	176.4
			SHC	81.1	110.5	139.9	77.8	107.1	136.5	74.3	103.6	132.9	70.6	99.9	129.2
		76	TC	–	222.6	222.2	–	212.0	211.5	–	200.7	200.2	–	188.8	188.3
			SHC	–	85.4	114.8	–	82.1	111.5	–	78.7	108.0	–	75.1	104.4
7500 CFM	EAT (wb)	58	TC	168.7	178.2	187.9	161.9	171.2	180.7	154.7	163.7	172.8	147.0	155.6	164.4
			SHC	168.7	178.2	187.9	161.9	171.2	180.7	154.7	163.7	172.8	147.0	155.6	164.4
		62	TC	178.5	179.4	188.1	170.0	171.6	180.8	160.9	163.8	172.9	151.4	155.8	164.5
			SHC	150.2	177.3	188.1	146.6	171.6	180.8	142.6	163.8	172.9	138.3	155.8	164.5
		67	TC	194.5	194.1	193.8	185.3	184.8	184.6	175.5	174.9	175.1	165.0	164.5	165.4
			SHC	116.8	148.8	179.5	113.3	145.3	175.2	109.7	141.7	170.2	105.8	137.8	163.5
		72	TC	211.5	211.1	210.6	201.4	201.0	200.3	190.7	190.2	189.6	179.4	178.8	178.2
			SHC	83.1	115.1	147.2	79.7	111.6	143.7	76.1	108.1	140.1	72.4	104.3	136.3
		76	TC	–	225.4	224.9	–	214.5	213.9	–	202.9	202.3	–	190.8	190.1
			SHC	–	87.8	119.9	–	84.5	116.5	–	81.0	113.0	–	77.4	109.3

LEGEND:

– – Do not operate
Cfm – Cubic feet per minute (supply air)
EAT(db) – Entering air temperature (dry bulb)
EAT(wb) – Entering air temperature (wet bulb)
SHC – Sensible heat capacity
TC – Total capacity

$$h_{lwb} = h_{ewb} - \frac{\text{total capacity (Btuh)}}{4.5 \times \text{cfm}}$$

Where: h_{ewb} = Enthalpy of air entering evaporator coil

TABLE 7 – COOLING CAPACITIES 2-STAGE COOLING 20 TONS

548J–24				AMBIENT TEMPERATURE											
				85 EAT (db)			95 EAT (db)			105 EAT (db)			115 EAT (db)		
				75	80	85	75	80	85	75	80	85	75	80	85
6000 CFM	EAT (wb)	58	TC	211.1	214.4	225.9	201.2	206.2	217.5	190.5	197.3	208.3	179.4	187.7	198.3
			SHC	191.5	214.4	225.9	186.3	206.2	217.5	180.6	197.3	208.3	173.1	187.7	198.3
		62	TC	227.4	227.1	228.8	216.8	216.4	219.2	205.2	204.9	208.6	192.8	192.6	198.5
			SHC	168.0	197.4	222.1	163.1	192.4	215.5	157.8	186.9	208.6	152.3	180.9	198.5
		67	TC	249.2	248.8	248.4	237.7	237.2	236.8	225.1	224.6	224.1	211.5	211.0	210.5
			SHC	137.5	167.2	196.8	132.7	162.4	191.9	127.5	157.2	186.7	122.0	151.7	181.0
		72	TC	272.6	272.1	271.6	259.9	259.5	258.9	246.2	245.7	245.1	231.3	230.8	230.2
			SHC	106.0	136.2	165.9	101.4	131.4	161.1	96.4	126.3	156.0	91.2	120.9	150.6
		76	TC	–	291.8	291.3	–	278.2	277.6	–	263.3	262.7	–	247.4	246.7
			SHC	–	110.8	140.7	–	106.1	136.0	–	101.1	130.9	–	95.8	125.6
7000 CFM	EAT (wb)	58	TC	218.0	225.8	238.1	207.9	217.0	229.0	197.5	207.4	219.0	186.3	196.9	208.1
			SHC	206.7	225.8	238.1	199.7	217.0	229.0	192.4	207.4	219.0	184.6	196.9	208.1
		62	TC	234.3	234.0	238.5	223.0	222.9	229.2	210.8	211.0	219.2	197.6	199.1	208.3
			SHC	180.8	214.0	238.5	175.7	208.4	229.2	170.3	201.5	219.2	164.6	193.2	208.3
		67	TC	256.5	256.0	255.4	244.2	243.7	243.1	230.9	230.4	229.8	216.6	216.0	215.6
			SHC	145.7	179.8	213.7	140.8	174.8	208.6	135.5	169.5	203.0	129.9	163.9	196.9
		72	TC	280.1	279.5	278.9	266.7	266.1	265.4	252.2	251.6	250.9	236.6	236.0	235.2
			SHC	109.9	144.2	178.3	105.1	139.3	173.4	99.9	134.1	168.2	94.4	128.6	162.6
		76	TC	–	299.4	298.7	–	285.0	284.2	–	269.4	268.6	–	252.6	251.7
			SHC	–	115.2	149.4	–	110.4	144.6	–	105.3	139.5	–	99.9	134.0
8000 CFM	EAT (wb)	58	TC	224.7	235.3	248.4	214.6	225.9	238.6	203.6	215.6	227.9	192.8	204.4	216.2
			SHC	218.0	235.3	248.4	211.0	225.9	238.6	203.6	215.6	227.9	192.8	204.4	216.2
		62	TC	239.6	239.8	248.6	227.8	229.0	238.8	215.0	217.3	228.1	201.4	204.7	216.4
			SHC	192.9	228.6	248.6	187.7	220.5	238.8	182.1	212.7	228.1	176.2	204.7	216.4
		67	TC	262.1	261.5	260.9	249.2	248.6	248.1	235.4	234.7	234.5	220.5	219.8	220.1
			SHC	153.4	191.8	229.5	148.4	186.7	224.0	143.0	181.3	217.8	137.3	175.6	209.5
		72	TC	285.9	285.2	284.4	271.9	271.2	270.4	256.9	256.1	255.2	240.7	239.9	239.0
			SHC	113.2	151.7	190.2	108.3	146.8	185.2	103.0	141.5	179.9	97.5	135.9	174.2
		76	TC	–	305.2	304.4	–	290.2	289.3	–	274.0	273.0	–	256.6	255.6
			SHC	–	119.2	157.8	–	114.3	152.9	–	109.1	147.6	–	103.7	142.1
9000 CFM	EAT (wb)	58	TC	230.7	243.3	256.9	220.3	233.4	246.5	209.9	222.5	235.2	198.6	210.7	222.8
			SHC	228.5	243.3	256.9	220.3	233.4	246.5	209.9	222.5	235.2	198.6	210.7	222.8
		62	TC	243.8	245.9	257.1	231.6	234.7	246.7	218.5	222.7	235.4	204.5	210.8	223.0
			SHC	204.4	238.9	257.1	199.0	231.3	246.7	193.2	222.7	235.4	186.8	210.8	223.0
		67	TC	266.5	265.8	265.4	253.2	252.5	252.4	239.0	238.1	239.0	223.6	222.7	224.9
			SHC	160.8	203.3	243.9	155.6	198.2	237.6	150.2	192.6	228.9	144.4	186.7	219.9
		72	TC	290.5	289.7	288.8	276.1	275.3	274.3	260.6	259.7	258.6	243.9	243.0	241.9
			SHC	116.3	159.0	201.6	111.3	154.0	196.5	106.0	148.6	191.2	100.4	142.9	185.4
		76	TC	–	309.8	308.8	–	294.3	293.2	–	277.6	276.5	–	259.8	258.6
			SHC	–	123.0	165.8	–	118.1	160.8	–	112.8	155.5	–	107.3	149.9
10,000 CFM	EAT (wb)	58	TC	236.3	250.2	264.2	226.3	239.7	253.3	215.4	228.3	241.4	203.6	216.0	228.5
			SHC	236.3	250.2	264.2	226.3	239.7	253.3	215.4	228.3	241.4	203.6	216.0	228.5
		62	TC	247.3	251.2	264.4	234.8	239.9	253.5	221.4	228.5	241.6	207.2	216.1	228.7
			SHC	215.3	249.0	264.4	209.6	239.9	253.5	203.4	228.5	241.6	196.2	216.1	228.7
		67	TC	270.1	269.3	269.5	256.5	255.6	256.9	241.8	240.9	243.4	226.1	225.2	229.0
			SHC	167.8	214.4	256.5	162.7	209.1	247.6	157.1	203.4	238.8	151.3	197.1	229.0
		72	TC	294.3	293.4	292.3	279.5	278.5	277.4	263.5	262.5	261.3	246.5	245.4	244.2
			SHC	119.1	165.9	212.7	114.1	160.9	207.5	108.8	155.5	202.0	103.1	149.7	196.1
		76	TC	–	313.5	312.4	–	297.6	296.4	–	280.5	279.2	–	262.3	261.0
			SHC	–	126.6	173.5	–	121.7	168.5	–	116.4	163.1	–	110.8	157.5

LEGEND:

– – Do not operate
Cfm – Cubic feet per minute (supply air)
EAT(db) – Entering air temperature (dry bulb)
EAT(wb) – Entering air temperature (wet bulb)
SHC – Sensible heat capacity
TC – Total capacity

TABLE 8 – HEATING CAPACITIES — 15 TONS

548J17 RETURN AIR (°F db)	CFM (STANDARD AIR)		TEMPERATURE AIR ENTERING OUTDOOR COIL (° F db at 70% RH)								
			–5	0	10	17	30	40	47	50	60
55	4500	Capacity	72.8	80.1	95.8	107.6	132.6	155.3	171.2	175.7	195.4
		Int. Cap.	67.1	73.7	87.9	98.1	116.2	155.3	171.2	175.7	195.4
	6000	Capacity	75.8	83.1	99.3	111.6	137.6	160.5	174.1	178.4	197.5
		Int. Cap.	69.9	76.5	91.1	101.7	120.6	160.5	174.1	178.4	197.5
	7500	Capacity	79.4	86.7	103.2	116.0	142.4	164.0	176.9	181.1	199.6
		Int. Cap.	73.2	79.8	94.7	105.8	124.8	164.0	176.9	181.1	199.6
70	4500	Capacity	65.8	73.0	88.9	100.5	124.7	145.1	163.1	168.7	190.3
		Int. Cap.	60.6	67.2	81.6	91.6	109.2	145.1	163.1	168.7	190.3
	6000	Capacity	68.9	76.4	92.6	104.5	129.6	151.5	169.0	174.0	193.0
		Int. Cap.	63.5	70.3	85.0	95.3	113.6	151.5	169.0	174.0	193.0
	7500	Capacity	72.6	80.2	96.6	108.8	134.5	157.3	173.2	177.4	195.7
		Int. Cap.	66.9	73.8	88.7	99.2	117.9	157.3	173.2	177.4	195.7
80	4500	Capacity	60.3	67.5	83.8	95.4	118.8	139.0	156.5	162.2	186.4
		Int. Cap.	55.5	62.1	76.9	87.0	104.1	139.0	156.5	162.2	186.4
	6000	Capacity	63.3	70.8	87.5	99.4	123.8	144.7	163.0	168.5	189.9
		Int. Cap.	58.4	65.2	80.3	90.6	108.5	144.7	163.0	168.5	189.9
	7500	Capacity	67.0	74.7	91.5	103.6	128.8	149.9	168.5	173.6	192.8
		Int. Cap.	61.7	68.7	84.0	94.5	112.8	149.9	168.5	173.6	192.8

LEGEND
Capacity – Instantaneous Capacity (1000 Btuh) includes indoor fan motor heat @AHRI static conditions
Int. Cap. – Integrated Capacity is Instantaneous Capacity minus the effects of frost on the outdoor coil and the heat required to defrost
RH – Relative Humidity
db – Dry Bulb

548J

TABLE 9 – HEATING CAPACITIES — 20 TONS

548J24 RETURN AIR (°F db)	CFM (STANDARD AIR)		TEMPERATURE AIR ENTERING OUTDOOR COIL (° F db at 70% RH)								
			–5	0	10	17	30	40	47	50	60
55	6000	Capacity	93.4	104.1	125.2	141.7	177.0	206.9	229.0	235.4	261.4
		Int. Cap.	86.1	95.8	114.9	129.2	155.1	206.9	229.0	235.4	261.4
	8000	Capacity	98.8	109.5	131.2	160.8	184.4	214.6	233.4	238.4	264.3
		Int. Cap.	91.0	100.8	120.4	146.6	161.6	214.6	233.4	238.4	264.3
	10000	Capacity	104.8	115.7	137.8	155.0	191.2	221.0	236.8	242.2	267.3
		Int. Cap.	96.65	106.4	126.4	141.4	167.5	221.0	236.8	242.2	267.3
70	6000	Capacity	81.1	92.2	114.9	131.1	165.6	195.1	219.1	226.5	256.2
		Int. Cap.	74.7	84.9	105.5	119.5	145.1	195.1	219.1	226.5	256.2
	8000	Capacity	86.1	97.5	120.3	137.0	173.1	203.3	227.0	233.8	259.2
		Int. Cap.	79.3	89.7	110.4	124.9	151.7	203.3	227.0	233.8	259.2
	10000	Capacity	91.9	103.5	126.4	143.5	179.7	211.8	233.6	239.8	262.9
		Int. Cap.	84.7	95.2	116.0	130.8	157.5	211.8	233.6	239.8	262.9
80	6000	Capacity	72.6	84.0	107.3	124.4	157.7	187.2	210.7	218.5	250.8
		Int. Cap.	66.9	77.3	98.5	113.5	138.2	187.2	210.7	218.5	250.8
	8000	Capacity	77.2	88.9	112.8	129.9	164.8	195.8	219.6	227.2	256.7
		Int. Cap.	71.2	81.8	103.5	118.4	144.4	195.8	219.6	227.2	256.7
	10000	Capacity	82.8	94.7	118.9	136.0	172.0	203.8	227.4	234.5	261.7
		Int. Cap.	76.3	87.1	109.2	124.0	150.7	203.8	227.4	234.5	261.7

LEGEND
Capacity – Instantaneous Capacity (1000 Btuh) includes indoor fan motor heat @AHRI static conditions
Int. Cap. – Integrated Capacity is Instantaneous Capacity minus the effects of frost on the outdoor coil and the heat required to defrost
RH – Relative Humidity
db – Dry Bulb

TABLE 10 – STATIC PRESSURE ADDERS (FACTORY OPTIONS AND/OR ACCESSORIES)

Economizer - Vertical and Horizontal Duct Configuration

Model Sizes 17 and 24								
CFM	**4500**	**5000**	**5500**	**6000**	**6500**	**7000**	**7500**	**8000**
	0.047	0.052	0.057	0.062	0.067	0.072	0.077	0.082

Model Sizes 17 and 24									
CFM	**8500**	**9000**	**9500**	**10000**	**10500**	**11000**	**11500**	**12000**	**12500**
	0.088	0.093	0.098	0.103	0.109	0.114	0.119	0.125	0.131

Electric Heaters - Vertical and Horizontal Duct Configuration

Model Sizes 17 and 24								
CFM	**4500**	**5000**	**5500**	**6000**	**6500**	**7000**	**7500**	**8000**
25 kW Heater	0.010	0.010	0.015	0.020	0.025	0.030	0.035	0.040
50 kW Heater	0.020	0.020	0.030	0.040	0.050	0.060	0.070	0.080
75 kW Heater	0.030	0.040	0.050	0.060	0.070	0.080	0.100	0.120

Model Sizes 17 and 24									
CFM	**8500**	**9000**	**9500**	**10000**	**10500**	**11000**	**11500**	**12000**	**12500**
25 kW Heater	0.045	0.050	0.055	0.060	0.070	0.080	0.090	0.100	0.105
50 kW Heater	0.090	0.100	0.120	0.130	0.150	0.160	0.180	0.200	0.230
75 kW Heater	0.140	0.150	0.180	0.200	0.230	0.250	0.270	0.300	0.330

General fan performance notes:

1. Interpolation is permissible. Do not extrapolate.
2. External static pressure is the static pressure difference between the return duct and the supply duct plus the static pressure caused by any FIOPs or accessories.
3. Tabular data accounts for pressure loss due to clean filters, unit casing, and wet coils. Factory options and accessories may add static pressure losses, as shown in the tables above. Selection software is available, through your salesperson, to help you select the best motor/drive combination for your application.
4. The Fan Performance tables offer motor/drive recommendations. In cases when two motor/drive combinations would work, Bryant recommended the lower horsepower option.
5. For information on the electrical properties of Bryant motors, please see the Electrical information section of this book.
6. For more information on the performance limits of Bryant motors, see the Application Data section of this book.

FAN PERFORMANCE

Table 11 – 548J-17D **15 TON VERTICAL SUPPLY / RETURN**

CFM	AVAILABLE EXTERNAL STATIC PRESSURE (IN. WG)									
	0.2		0.4		0.6		0.8		1.0	
	RPM	BHP	RPM	BHP	RPM	BHP	RPM	BHP	RPM	BHP
3900	409	0.46	509	0.73	594	1.03	670	1.36	**738**	**1.71**
4400	430	0.57	525	0.86	607	1.18	681	1.52	**748**	**1.89**
4800	451	0.69	542	1.00	622	1.34	693	1.70	**758**	**2.08**
5300	473	0.83	560	1.16	637	1.51	706	1.89	**770**	**2.30**
5700	496	0.98	579	1.34	653	1.71	720	2.11	**782**	**2.53**
6100	519	1.16	599	1.54	670	1.94	**735**	**2.35**	**796**	**2.79**
6600	543	1.37	619	1.76	688	2.18	**751**	**2.62**	**810**	**3.07**
7000	567	1.59	640	2.01	**707**	**2.45**	**768**	**2.91**	826	3.38
7400	592	1.84	662	2.28	**726**	**2.74**	**785**	**3.22**	842	3.72
7900	616	2.12	**683**	**2.59**	**746**	**3.07**	804	3.56	858	4.08

CFM	AVAILABLE EXTERNAL STATIC PRESSURE (IN. WG)									
	1.2		1.4		1.6		1.8		2.0	
	RPM	BHP	RPM	BHP	RPM	BHP	RPM	BHP	RPM	BHP
3900	**801**	**2.08**	**860**	**2.47**	915	2.88	967	3.31	1017	3.75
4400	**809**	**2.27**	**867**	**2.68**	922	3.10	973	3.55	1022	4.01
4800	**819**	**2.48**	**876**	**2.91**	929	3.35	980	3.80	1028	4.28
5300	**829**	**2.72**	885	3.16	938	3.61	988	4.09	1036	4.57
5700	**840**	**2.97**	895	3.43	947	3.90	996	4.39	1043	4.89
6100	**853**	**3.25**	906	3.72	957	4.21	1006	4.72	– – – –	– – – –
6600	866	3.55	918	4.04	968	4.55	– – – –	– – – –	– – – –	– – – –
7000	880	3.88	931	4.38	980	4.90	– – – –	– – – –	– – – –	– – – –
7400	895	4.23	945	4.76	– – – –	– – – –	– – – –	– – – –	– – – –	– – – –
7900	910	4.61	– – – –	– – – –	– – – –	– – – –	– – – –	– – – –	– – – –	– – – –

White background with black font – Field–supplied drive
Light shading – Standard static motor and drive
– – – – Outside operating range
Bold font – Medium static motor and drive
Med shade – High static motor and drive

Table 12 – 548J-17D **15 TON HORIZONTAL SUPPLY / RETURN**

CFM	AVAILABLE EXTERNAL STATIC PRESSURE (IN. WG)									
	0.2		0.4		0.6		0.8		1.0	
	RPM	BHP	RPM	BHP	RPM	BHP	RPM	BHP	RPM	BHP
4000	422	0.66	510	1.07	582	1.52	646	2.00	**703**	**2.51**
4500	451	0.83	535	1.27	605	1.75	**667**	**2.27**	**723**	**2.81**
5000	482	1.04	561	1.51	629	2.02	**690**	**2.57**	745	3.15
5500	518	1.28	588	1.78	**654**	**2.32**	**713**	**2.91**	767	3.52
6000	546	1.57	617	2.10	**680**	**2.67**	738	3.29	790	3.93
6500	579	1.90	**646**	**2.46**	**707**	**3.07**	763	3.71	814	4.39
7000	613	2.20	**677**	**2.87**	735	3.51	789	4.19	839	4.89
7500	**648**	**2.71**	**708**	**3.34**	764	4.01	816	4.72	865	5.46
8000	**683**	**3.20**	740	3.86	794	4.57	844	5.30	892	6.08

CFM	AVAILABLE EXTERNAL STATIC PRESSURE (IN. WG)									
	1.2		1.4		1.6		1.8		2.0	
	RPM	BHP	RPM	BHP	RPM	BHP	RPM	BHP	RPM	BHP
4000	754	3.05	802	3.62	847	4.21	889	4.82	929	5.45
4500	774	3.39	822	3.98	866	4.60	908	5.25	948	5.91
5000	795	3.75	842	4.38	886	5.03	928	5.71	967	6.40
5500	817	4.15	863	4.82	907	5.50	948	6.21	987	6.93
6000	839	4.60	885	5.29	928	6.01	969	6.75	1008	7.51
6500	862	5.09	907	5.82	950	6.57	990	7.34	– – – –	– – – –
7000	886	5.63	930	6.39	972	7.17	– – – –	– – – –	– – – –	– – – –
7500	911	6.22	954	7.01	– – – –	– – – –	– – – –	– – – –	– – – –	– – – –
8000	936	6.87	979	7.69	– – – –	– – – –	– – – –	– – – –	– – – –	– – – –

White background with black font – Field–supplied drive
Light shading – Standard static motor and drive
– – – – Outside operating range
Bold font – Medium static motor and drive
Med shade – High static motor and drive

FAN PERFORMANCE (cont.)

Table 13 – 548J-24D **20 TON VERTICAL SUPPLY / RETURN**

CFM	AVAILABLE EXTERNAL STATIC PRESSURE (IN. WG)									
	0.2		0.4		0.6		0.8		1.0	
	RPM	BHP	RPM	BHP	RPM	BHP	RPM	BHP	RPM	BHP
4500	429	0.57	528	0.81	612	1.06	685	1.32	751	1.60
5000	454	0.72	549	0.99	629	1.26	701	1.54	765	1.84
5500	480	0.91	570	1.19	648	1.49	718	1.79	781	2.10
6000	506	1.12	593	1.43	668	1.74	736	2.07	798	2.40
6500	533	1.36	616	1.70	689	2.04	754	2.39	815	2.74
7000	561	1.64	640	2.01	710	2.37	774	2.74	**833**	**3.11**
7500	588	1.96	664	2.35	732	2.74	795	3.13	**852**	**3.53**
8000	617	2.32	689	2.74	755	3.15	816	3.57	**872**	**3.99**
8500	645	2.73	715	3.17	779	3.60	**837**	**4.04**	**892**	**4.49**
9000	676	3.18	741	3.64	803	4.10	**860**	**4.57**	**913**	**5.04**
9500	703	3.67	767	4.16	**827**	**4.65**	**883**	**5.14**	**935**	**5.64**
10000	732	4.22	794	4.74	**852**	**5.25**	**906**	**5.77**	**957**	**6.29**

CFM	AVAILABLE EXTERNAL STATIC PRESSURE (IN. WG)									
	1.2		1.4		1.6		1.8		2.0	
	RPM	BHP	RPM	BHP	RPM	BHP	RPM	BHP	RPM	BHP
4500	811	1.90	**868**	**2.20**	**921**	**2.52**	**971**	**2.86**	1019	3.20
5000	**825**	**2.15**	**881**	**2.47**	**933**	**2.80**	**982**	**3.15**	1029	3.51
5500	**840**	**2.43**	**894**	**2.77**	**946**	**3.12**	**995**	**3.48**	1041	3.86
6000	**855**	**2.75**	**909**	**3.11**	**959**	**3.47**	**1008**	**3.85**	1054	4.24
6500	**871**	**3.11**	**924**	**3.48**	**974**	**3.87**	1022	4.26	1067	4.67
7000	**888**	**3.50**	**940**	**3.89**	**989**	**4.30**	1036	4.71	1081	5.13
7500	**906**	**3.94**	**957**	**4.35**	**1005**	**4.77**	1052	5.20	1096	5.64
8000	**925**	**4.42**	**975**	**4.85**	1022	5.29	1068	5.74	1111	6.20
8500	**944**	**4.94**	**993**	**5.40**	1040	5.86	1084	6.33	1127	6.81
9000	**964**	**5.51**	1012	5.99	1058	6.48	1102	6.97	1144	7.46
9500	**984**	**6.13**	1032	6.64	1077	7.14	1120	7.65	1161	8.17
10000	**1006**	**6.81**	1052	7.33	1096	7.86	1138	8.40	– – – –	– – – –

White background with black font – Field–supplied drive
Light shading – Standard static motor and drive
– – – – Outside operating range
Bold font – Medium static motor and drive
Med shade – High static motor and drive

Table 14 – 548J-24D **20 TON HORIZONTAL SUPPLY / RETURN**

CFM	AVAILABLE EXTERNAL STATIC PRESSURE (IN. WG)									
	0.2		0.4		0.6		0.8		1.0	
	RPM	BHP	RPM	BHP	RPM	BHP	RPM	BHP	RPM	BHP
6000	546	1.57	617	2.10	680	2.67	738	3.29	790	3.93
6500	579	1.90	646	2.46	707	3.07	763	3.71	814	4.39
7000	613	2.28	677	2.87	735	3.51	789	4.19	**839**	**4.89**
7500	648	2.71	708	3.34	764	4.01	816	4.72	**865**	**5.46**
8000	683	3.20	740	3.86	794	4.57	**846**	**5.30**	**892**	**6.08**
8500	718	3.76	773	4.45	**825**	**5.18**	**873**	**5.95**	919	6.75
9000	754	4.37	**814**	**5.10**	**856**	**5.87**	903	6.67	947	7.50
9500	790	5.06	**840**	**5.82**	**887**	**6.51**	933	7.45	976	8.31
10000	826	5.82	**874**	**6.50**	920	7.44	965	8.30	– – – –	– – – –

CFM	AVAILABLE EXTERNAL STATIC PRESSURE (IN. WG)									
	1.2		1.4		1.6		1.8		2.0	
	RPM	BHP	RPM	BHP	RPM	BHP	RPM	BHP	RPM	BHP
6000	**839**	**4.60**	**885**	**5.29**	**928**	**6.01**	969	6.75	1008	7.51
6500	**862**	**5.09**	**907**	**5.82**	950	6.57	990	7.34	1028	8.13
7000	**886**	**5.63**	**930**	**6.39**	972	7.17	1012	7.97	1050	8.70
7500	**911**	**6.22**	954	7.01	995	7.83	1035	8.66	– – – –	– – – –
8000	936	6.87	979	7.69	1019	8.54	– – – –	– – – –	– – – –	– – – –
8500	965	7.58	1004	8.44	– – – –	– – – –	– – – –	– – – –	– – – –	– – – –
9000	990	8.36	– – – –	– – – –	– – – –	– – – –	– – – –	– – – –	– – – –	– – – –
9500	– – – –	– – – –	– – – –	– – – –	– – – –	– – – –	– – – –	– – – –	– – – –	– – – –
10000	– – – –	– – – –	– – – –	– – – –	– – – –	– – – –	– – – –	– – – –	– – – –	– – – –

White background with black font – Field–supplied drive
Light shading – Standard static motor and drive
– – – – Outside operating range
Bold font – Medium static motor and drive
Med shade – High static motor and drive

Table 15 – PULLEY ADJUSTMENT

UNIT	MOTOR/DRIVE COMBO	MOTOR PULLEY TURNS OPEN										
		0.0	0.5	1.0	1.5	2.0	2.5	3.0	3.5	4.0	4.5	5.0
17	Standard Static	680	663	647	630	614	597	580	564	547	531	514
	Medium Static	863	845	826	808	789	771	753	734	716	697	679
	High Static	1009	991	972	954	936	918	899	881	863	844	826
24	Standard Static	863	846	828	811	794	777	759	742	725	707	690
	Medium Static	1021	1002	984	965	947	928	909	891	872	854	835
	High Static	1176	1153	1129	1106	1082	1059	1035	1012	988	965	941

NOTE: Do not adjust pulley further than 5 turns open.

– Factory settings

DAMPER, BAROMETRIC RELIEF AND PE PERFORMANCE

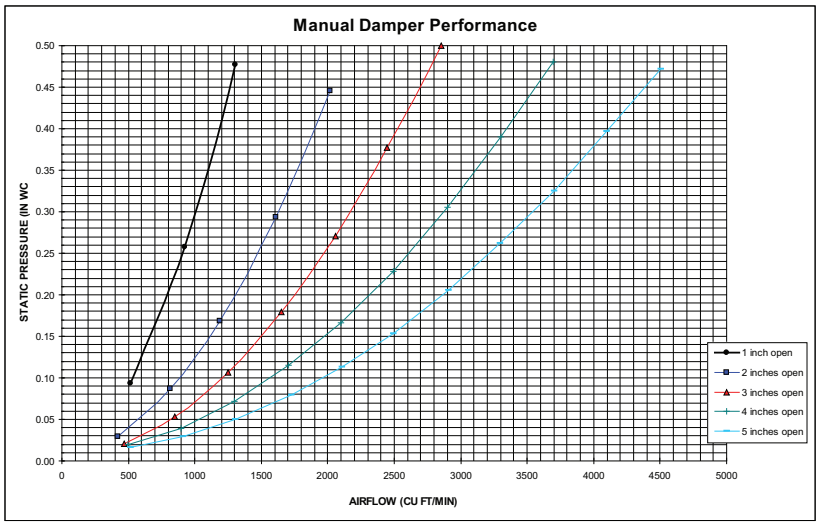

C09264

Fig. 9 - Manual Damper Performance

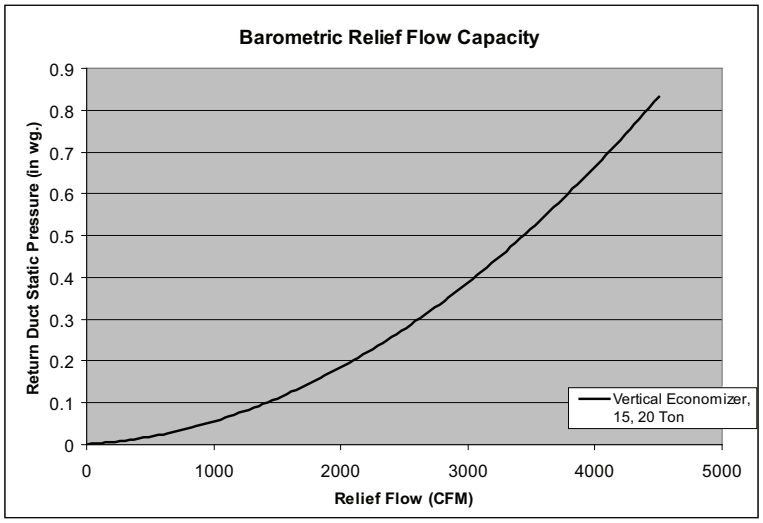

C10583

Fig. 10 - Barometric Relief Flow Capacity

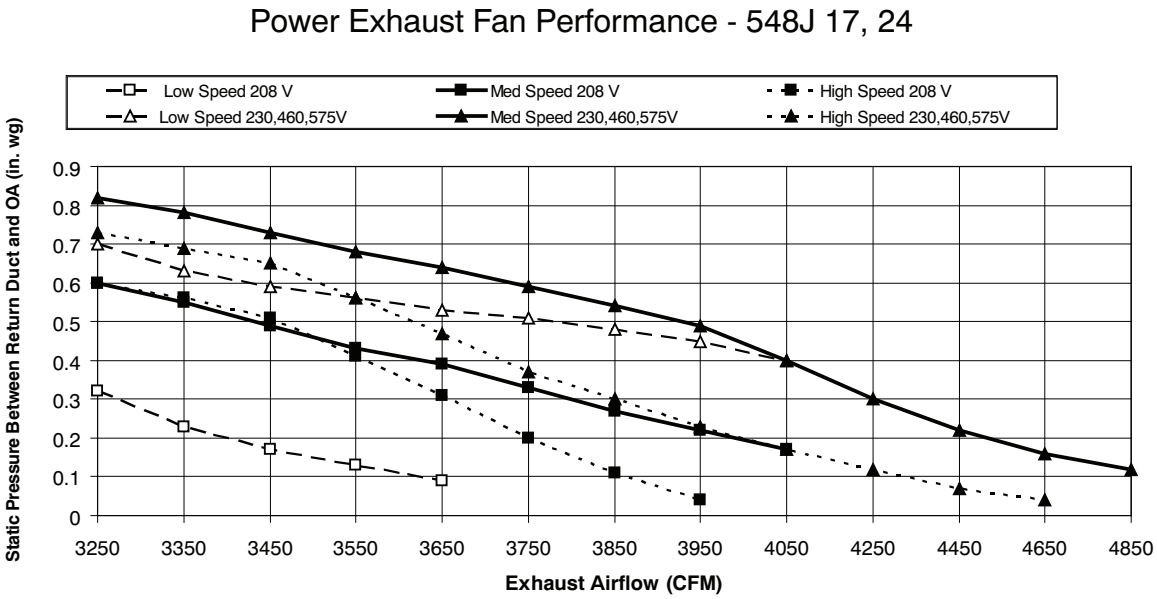

C10769

Fig. 11 - Power Exhaust Fan Performance

TABLE 16 – 2-STAGE COOLING **15 AND 20 TONS**

UNIT	V–PH–HZ	VOLTAGE RANGE		COMP 1		COMP 2		OFM (ea)		IFM	IFM	IFM
		MIN	MAX	RLA	LRA	RLA	LRA	WATTS	FLA	TYPE	EFF at Full Load	FLA
548J–17	208–3–60	187	253	25.0	164.0	25.0	164.0	350	1.5	STD	81.3%	7.5
										MED	83.8%	10.2
										HIGH	83.6%	15.0
	230–3–60	187	253	25.0	164.0	25.0	164.0	350	1.5	STD	81.3%	7.5
										MED	83.8%	10.2
										HIGH	83.6%	15.0
	460–3–60	414	506	12.2	100.0	12.2	100.0	277	0.9	STD	81.3%	3.4
										MED	83.8%	4.8
										HIGH	83.6%	7.4
	575–3–60	518	633	9	78	9	78	397	0.6	STD	81.1%	2.8
										MED	81.1%	2.8
										HIGH	83.6%	5.6
548J–24	208–3–60	187	253	33.3	239.0	30.1	225.0	350	1.5	STD	83.6%	15.0
										MED	87.5%	12.8
										HIGH	88.5%	19.4
										MED–High Eff	89.5%	20.4
										HIGH–High Eff	91.7%	33.1
	230–3–60	187	253	33.3	239.0	30.1	225.0	350	1.5	STD	83.6%	15.0
										MED	87.5%	12.8
										HIGH	88.5%	19.4
										MED–High Eff	89.5%	20.4
										HIGH–High Eff	91.7%	33.1
	460–3–60	414	506	17.9	125	16.7	114.0	277	0.9	STD	83.6%	7.4
										MED	87.5%	6.4
										HIGH	88.5%	9.7
										MED–High Eff	89.5%	20.4
										HIGH–High Eff	91.7%	33.1
	575–3–60	518	633	12.8	80	12.2	80	397	0.6	STD	83.6%	5.6
										MED	87.5%	5.1
										HIGH	88.5%	7.8
										MED–High Eff	89.5%	9.0
										HIGH–High Eff	91.7%	9.5

Table 17 – MCA/MOCP DETERMINATION NO C.O. OR UNPWRD C.O.

UNIT	NOM. V–PH–HZ	IFM TYPE	ELECTRIC HEATER		NO C.O. or UNPWR C.O.							
					NO P.E.				w/ P.E. (pwrd fr/unit)			
			Nom (kW)	FLA	MCA	MOCP	DISC. SIZE		MCA	MOCP	DISC. SIZE	
							FLA	LRA			FLA	LRA
548J–17	208/230–3–60	STD	–	–	68.3	90.0	71.0	393.0	80.1	100.0	85.0	413.0
			18.8/25.0	52.1/60.1	133.4/143.4	150/150	131/140	445/453	145.2/155.2	150/175	145/154	465/473
			37.6/50.0	104.2/120.3	198.5/188.6	200/200	191/210	497/513	210.3/200.4	225/225	205/223	517/533
			56.3/75.0	156.4/180.4	224.7/248.7	250/300	251/279	549/573	236.5/260.5	250/300	265/292	569/593
		MED	–	–	71.0	90.0	74.0	410.0	82.8	100.0	88.0	430.0
			18.8/25.0	52.1/60.1	136.1/146.1	150/150	134/144	462/470	147.9/157.9	150/175	148/157	482/490
			37.6/50.0	104.2/120.3	201.2/191.3	225/200	194/213	514/530	213.0/203.1	225/225	208/226	534/550
			56.3/75.0	156.4/180.4	227.4/251.4	250/300	254/282	566/590	239.2/263.2	250/300	268/295	586/610
		HIGH	–	–	75.8	100.0	80.0	419.0	87.6	100.0	93.0	439.0
			18.8/25.0	52.1/60.1	140.9/150.9	150/175	140/149	471/479	152.7/162.7	175/175	153/163	491/499
			37.6/50.0	104.2/120.3	206.0/196.1	225/225	200/218	523/539	217.8/207.9	225/225	213/232	543/559
			56.3/75.0	156.4/180.4	232.2/256.2	250/300	260/287	575/599	244.0/268.0	300/300	273/301	595/619
	460–3–60	STD	–	–	33.6	45.0	35.0	234.0	39.8	50.0	42.0	246.0
			25.0	30.1	71.2	80.0	70.0	264.0	77.4	80.0	77.0	276.0
			50.0	60.1	93.7	100.0	104.0	294.0	99.9	110.0	111.0	306.0
			75.0	90.2	123.8	150	139	324	130.0	150	146	336
		MED	–	–	35.0	45.0	37.0	243.0	41.2	50.0	44.0	255.0
			25.0	30.1	72.6	80.0	71.0	273.0	78.8	80.0	78.0	285.0
			50.0	60.1	95.1	100.0	106.0	303.0	101.3	110.0	113.0	315.0
			75.0	90.2	125.2	150	140	333	131.4	150	148.0	345.0
		HIGH	–	–	37.6	45.0	40.0	247.0	43.8	50.0	47.0	259.0
			25.0	30.1	75.2	80.0	74.0	277.0	81.4	90.0	81.0	289.0
			50.0	60.1	97.7	110.0	109.0	307.0	103.9	110.0	116.0	319.0
			75.0	90.2	127.8	150	143	337	134.0	150	151	349
	575–3–60	STD	–	–	24.9	30.0	26.0	184.0	29.7	35.0	32.0	192.0
			24.8	23.9	54.7	60.0	53.0	208.0	59.5	60.0	59.0	216.0
			49.6	47.7	84.5	90.0	81.0	232.0	89.3	90.0	86.0	240.0
			74.4	71.6	96.5	100	108	256	101.3	110	114	264
		MED	–	–	24.9	30.0	26.0	184.0	29.7	35.0	32.0	192.0
			24.8	23.9	54.7	60.0	53.0	208.0	59.5	60.0	59.0	216.0
			49.6	47.7	84.5	90.0	81.0	232.0	89.3	90.0	86.0	240.0
			74.4	71.6	96.5	100	108	256	101.3	110	114	264
		HIGH	–	–	27.7	30.0	29.0	198.0	32.5	40.0	35.0	206.0
			24.8	23.9	57.5	60.0	57.0	222.0	62.3	70.0	62.0	230.0
			49.6	47.7	87.3	90.0	84.0	246.0	92.1	100.0	90.0	254.0
			74.4	71.6	99.3	110	112	270	104.1	110	117	278

TABLE 17 – (cont.) MCA/MOCP DETERMINATION NO C.O. OR UNPWRD C.O.

UNIT	NOM. V–PH–HZ	IFM TYPE	ELECTRIC HEATER		NO C.O. or UNPWR C.O.							
					NO P.E.				w/ P.E. (pwrd fr/unit)			
			Nom (kW)	FLA	MCA	MOCP	DISC. SIZE		MCA	MOCP	DISC. SIZE	
							FLA	LRA			FLA	LRA
548J–24	208/230–3–60	STD	–	–	92.7	125.0	97.0	558.0	104.5	125.0	111.0	578.0
			18.8/25.0	52.1/60.1	157.9/167.9	175/175	157/166	610/618	169.7/179.7	175/200	171/180	630/638
			37.6/50.0	104.2/120.3	223.0/213.0	225/225	217/235	662/678	234.8/224.8	250/250	230/249	682/698
			56.3/75.0	156.4/180.4	249.1/273.1	300/300	277/305	714/738	260.9/284.9	300/300	290/318	734/758
		MED	–	–	90.5	100.0	95.0	560.0	102.3	125.0	108.0	580.0
			18.8/25.0	52.1/60.1	155.7/165.7	175/175	154/164	612/620	167.5/177.5	175/200	168/177	632/640
			37.6/50.0	104.2/120.3	220.8/210.8	225/225	214/233	664/680	232.6/222.6	250/250	228/246	684/700
			56.3/75.0	156.4/180.4	246.9/270.9	300/300	274/302	716/740	258.7/282.7	300/300	288/316	736/760
		HIGH	–	–	97.1	125.0	102.0	596.0	108.9	125.0	116.0	616.0
			18.8/25.0	52.1/60.1	162.3/172.3	175/175	162/171	648/656	174.1/184.1	175/200	176/185	668/676
			37.6/50.0	104.2/120.3	227.4/217.4	250/250	222/240	700/716	239.2/229.2	250/250	236/254	720/736
			56.3/75.0	156.4/180.4	253.5/277.5	300/300	282/310	752/776	265.3/289.3	300/300	296/323	772/796
		MED–High Eff	–	–	98.1	125.0	103.0	568.0	109.9	125.0	117.0	588.0
			18.8/25.0	52.1/60.1	163.3/173.3	175/175	163/172	620/628	175.1/185.1	200/200	177/186	640/648
			37.6/50.0	104.2/120.3	228.4/218.4	250/250	223/242	672/688	240.2/230.2	250/250	237/255	692/708
			56.3/75.0	156.4/180.4	254.5/278.5	300/300	283/311	724/748	266.3/290.3	300/300	297/324	744/768
		HIGH–High Eff	–	–	110.8	125.0	118.0	642.0	122.6	150.0	131.0	662.0
			18.8/25.0	52.1/60.1	176.0/186.0	200/200	178/187	694/702	187.8/197.8	200/200	191/201	714/722
			37.6/50.0	104.2/120.3	241.1/231.1	250/250	238/256	746/762	252.9/242.9	300/300	251/270	766/782
			56.3/75.0	156.4/180.4	267.2/291.2	300/300	298/325	798/822	279.0/303.0	300/350	311/339	818/842
	460–3–60	STD	–	–	50.1	60.0	52.0	288.0	56.3	70.0	60.0	300.0
			25.0	30.1	87.7	90.0	87.0	318.0	93.9	100.0	94.0	330.0
			50.0	60.1	110.2	125.0	122.0	348.0	116.4	125.0	129.0	360.0
			75.0	90.2	140.3	150	156	378	146.5	175	163	390
		MED	–	–	49.1	60.0	51.0	289.0	55.3	60.0	58.0	301.0
			25.0	30.1	86.7	90.0	86.0	319.0	92.9	100.0	93.0	331.0
			50.0	60.1	109.2	125.0	120.0	349.0	115.4	125.0	128.0	361.0
			75.0	90.2	139.3	150	155	379	145.5	150	162	391
		HIGH	–	–	52.4	60.0	55.0	307.0	58.6	70.0	62.0	319.0
			25.0	30.1	90.0	100.0	90.0	337.0	96.2	100.0	97.0	349.0
			50.0	60.1	112.5	125.0	124.0	367.0	118.7	125.0	131.0	379.0
			75.0	90.2	142.6	150	159	397	148.8	175	166	409
		MED–High Eff	–	–	52.9	60.0	56.0	293.0	59.1	70.0	63.0	305.0
			25.0	30.1	90.5	100.0	90.0	323.0	96.7	100.0	97.0	335.0
			50.0	60.1	113.0	125.0	125.0	353.0	119.2	125.0	132.0	365.0
			75.0	90.2	143.1	150	159	383	149.3	175	167	395
		HIGH–High Eff	–	–	58.9	70.0	63.0	330.0	65.1	80.0	70.0	342.0
			25.0	30.1	96.5	100.0	97.0	360.0	102.7	110.0	104.0	372.0
			50.0	60.1	119.0	125.0	132.0	390.0	125.2	150.0	139.0	402.0
			75.0	90.2	149.1	175	166	420	155.3	175	173	432
	575–3–60	STD	–	–	36.2	45.0	38.0	204.0	41.0	50.0	43.0	212.0
			24.8	23.9	66.1	70.0	65.0	228.0	70.9	80.0	71.0	236.0
			49.6	47.7	95.8	100.0	93.0	252.0	100.6	110.0	98.0	260.0
			74.4	71.6	107.8	125	120	276	112.6	125	126	284
		MED	–	–	35.7	45.0	37.0	193.0	40.5	50.0	43.0	201.0
			24.8	23.9	65.6	70.0	65.0	217.0	70.4	80.0	70.0	225.0
			49.6	47.7	95.3	100.0	92.0	241.0	100.1	110.0	98.0	249.0
			74.4	71.6	107.3	125	120	265	112.1	125	125	273
		HIGH	–	–	38.4	50.0	40.0	219.0	43.2	50.0	46.0	227.0
			24.8	23.9	68.3	70.0	68.0	243.0	73.1	80.0	73.0	251.0
			49.6	47.7	98.0	100.0	95.0	267.0	102.8	110.0	101.0	275.0
			74.4	71.6	110.0	125	123	291	114.8	125	128	299
		MED–High Eff	–	–	39.6	50.0	42.0	202.0	44.4	50.0	47.0	210.0
			24.8	23.9	69.5	70.0	69.0	226.0	74.3	80.0	75.0	234.0
			49.6	47.7	99.2	100.0	97.0	250.0	104.0	110.0	102.0	258.0
			74.4	71.6	111.2	125	124	274	116.0	125	130	282
		HIGH–High Eff	–	–	40.1	50.0	42.0	229.0	44.9	50.0	48.0	237.0
			24.8	23.9	70.0	70.0	70.0	253.0	74.8	80.0	75.0	261.0
			49.6	47.7	99.7	100.0	97.0	277.0	104.5	110.0	103.0	285.0
			74.4	71.6	111.7	125	125	301	116.5	125	130	309

Table 18 – MCA/MOCP DETERMINATION W/ PWRD C.O.

UNIT	NOM. V–PH–HZ	IFM TYPE	ELECTRIC HEATER		w/ PWRD C.O.							
					NO P.E.				w/ P.E. (pwrd fr/unit)			
			Nom (kW)	FLA	MCA	MOCP	DISC. SIZE		MCA	MOCP	DISC. SIZE	
							FLA	LRA			FLA	LRA
548J–17	208/230–3–60	STD	–	–	73.1	90.0	77.0	398.0	84.9	100.0	90.0	418.0
			18.8/25.0	52.1/60.1	138.2/148.2	150/150	137/146	450/458	150.0/160.0	150/175	150/160	470/478
			37.6/50.0	104.2/120.3	203.3/193.4	225/200	197/215	502/518	215.1/205.2	225/225	210/229	522/538
			56.3/75.0	156.4/180.4	229.5/253.5	250/300	257/284	554/578	241.3/265.3	250/300	270/298	574/598
		MED	–	–	75.8	100.0	80.0	415.0	87.6	100.0	93.0	435.0
			18.8/25.0	52.1/60.1	140.9/150.9	150/175	140/149	467/475	152.7/162.7	175/175	153/163	487/495
			37.6/50.0	104.2/120.3	206.0/196.1	225/225	200/218	519/535	217.8/207.9	225/225	213/232	539/555
			56.3/75.0	156.4/180.4	232.2/256.2	250/300	260/287	571/595	244.0/268.0	300/300	273/301	591/615
		HIGH	–	–	80.6	100.0	85.0	424.0	92.4	100.0	99.0	444.0
			18.8/25.0	52.1/60.1	145.7/155.7	150/175	145/155	476/484	157.5/167.5	175/175	159/168	496/504
			37.6/50.0	104.2/120.3	210.8/200.9	225/225	205/224	528/544	222.6/212.7	225/225	219/237	548/564
			56.3/75.0	156.4/180.4	237.0/261.0	250/300	265/293	580/604	248.8/272.8	300/300	279/306	600/624
	460–3–60	STD	–	–	35.8	45.0	38.0	236.0	42.0	50.0	45.0	248.0
			25.0	30.1	73.4	80.0	72.0	266.0	79.6	80.0	79.0	278.0
			50.0	60.1	95.9	100.0	107.0	296.0	102.1	110.0	114.0	308.0
			75.0	90.2	126.0	150	141	326	132.2	150	148	338
		MED	–	–	37.2	45.0	39.0	245.0	43.4	50.0	46.0	257.0
			25.0	30.1	74.8	80.0	74.0	275.0	81.0	90.0	81.0	287.0
			50.0	60.1	97.3	110.0	108.0	305.0	103.5	110.0	115.0	317.0
			75.0	90.2	127.4	150	143	335	133.6	150	150	347
		HIGH	–	–	39.8	50.0	42.0	249.0	46.0	50.0	49.0	261.0
			25.0	30.1	77.4	80.0	77.0	279.0	83.6	90.0	84.0	291.0
			50.0	60.1	99.9	110.0	111.0	309.0	106.1	110.0	118.0	321.0
			75.0	90.2	130.0	150	146	339	136.2	150	153	351
	575–3–60	STD	–	–	26.6	30.0	28.0	186.0	31.4	40.0	33.0	194.0
			24.8	23.9	56.4	60.0	55.0	210.0	61.2	70.0	61.0	218.0
			49.6	47.7	86.2	90.0	83.0	234.0	91.0	100.0	88.0	242.0
			74.4	71.6	98.2	110	110	258	103.0	110	116	266
		MED	–	–	26.6	30.0	28.0	186.0	31.4	40.0	33.0	194.0
			24.8	23.9	56.4	60.0	55.0	210.0	61.2	70.0	61.0	218.0
			49.6	47.7	86.2	90.0	83.0	234.0	91.0	100.0	88.0	242.0
			74.4	71.6	98.2	110	110	258	103.0	110	116	266
		HIGH	–	–	29.4	35.0	31.0	200.0	34.2	40.0	37.0	208.0
			24.8	23.9	59.2	60.0	59.0	224.0	64.0	70.0	64.0	232.0
			49.6	47.7	89.0	90.0	86.0	248.0	93.8	100.0	92.0	256.0
			74.4	71.6	101.0	110	114	272	105.8	110	119	280

TABLE 18 – (cont.) MCA/MOCP DETERMINATION W/ PWRD C.O.

UNIT	NOM. V–PH–HZ	IFM TYPE	ELECTRIC HEATER		w/ PWRD C.O.							
					NO P.E.				w/ P.E. (pwrd fr/unit)			
			Nom (kW)	FLA	MCA	MOCP	DISC. SIZE		MCA	MOCP	DISC. SIZE	
							FLA	LRA			FLA	LRA
548J–24	208/230–3–60	STD	–	–	97.5	125.0	103.0	563.0	109.3	125.0	116.0	583.0
			18.8/25.0	52.1/60.1	162.7/172.7	175/175	162/172	615/623	174.5/184.5	175/200	176/185	635/643
			37.6/50.0	104.2/120.3	227.8/217.8	250/250	222/241	667/683	239.6/229.6	250/250	236/254	687/703
			56.3/75.0	156.4/180.4	253.9/277.9	300/300	282/310	719/743	265.7/289.7	300/300	296/324	739/763
		MED	–	–	95.3	125.0	100.0	565.0	107.1	125.0	114.0	585.0
			18.8/25.0	52.1/60.1	160.5/170.5	175/175	160/169	617/625	172.3/182.3	175/200	174/183	637/645
			37.6/50.0	104.2/120.3	225.6/215.6	250/225	220/238	669/685	237.4/227.4	250/250	233/252	689/705
			56.3/75.0	156.4/180.4	251.7/275.7	300/300	280/308	721/745	263.5/287.5	300/300	293/321	741/765
		HIGH	–	–	101.9	125.0	108.0	601.0	113.7	125.0	121.0	621.0
			18.8/25.0	52.1/60.1	167.1/177.1	175/200	168/177	653/661	178.9/188.9	200/200	181/190	673/681
			37.6/50.0	104.2/120.3	232.2/222.2	250/250	227/246	705/721	244.0/234.0	250/250	241/260	725/741
			56.3/75.0	156.4/180.4	258.3/282.3	300/300	288/315	757/781	270.1/294.1	300/350	301/329	777/801
		MED–High Eff	–	–	102.9	125.0	109.0	573.0	114.7	125.0	122.0	593.0
			18.8/25.0	52.1/60.1	168.1/178.1	175/200	169/178	625/633	179.9/189.9	200/200	182/191	645/653
			37.6/50.0	104.2/120.3	233.2/223.2	250/250	229/247	677/693	245.0/235.0	250/250	242/261	697/713
			56.3/75.0	156.4/180.4	259.3/283.3	300/300	289/316	729/753	271.1/295.1	300/350	302/330	749/773
		HIGH–High Eff	–	–	115.6	125.0	123.0	647.0	127.4	150.0	137.0	667.0
			18.8/25.0	52.1/60.1	180.8/190.8	200/200	183/193	699/707	192.6/202.6	200/225	197/206	719/727
			37.6/50.0	104.2/120.3	245.9/235.9	250/250	243/262	751/767	257.7/247.7	300/300	257/275	771/787
			56.3/75.0	156.4/180.4	272.0/296.0	300/350	303/331	803/827	283.8/307.8	300/350	317/344	823/847
	460–3–60	STD	–	–	52.3	60.0	55.0	290.0	58.5	70.0	62.0	302.0
			25.0	30.1	89.9	100.0	90.0	320.0	96.1	100.0	97.0	332.0
			50.0	60.1	112.4	125.0	124.0	350.0	118.6	125.0	131.0	362.0
			75.0	90.2	142.5	150	159	380	148.7	175	166	392
		MED	–	–	51.3	60.0	54.0	291.0	57.5	70.0	61.0	303.0
			25.0	30.1	88.9	90.0	88.0	321.0	95.1	100.0	96.0	333.0
			50.0	60.1	111.4	125.0	123.0	351.0	117.6	125.0	130.0	363.0
			75.0	90.2	141.5	150	158	381	147.7	175	165	393
		HIGH	–	–	54.6	60.0	58.0	309.0	60.8	70.0	65.0	321.0
			25.0	30.1	92.2	100.0	92.0	339.0	98.4	100.0	99.0	351.0
			50.0	60.1	114.7	125.0	127.0	369.0	120.9	150.0	134.0	381.0
			75.0	90.2	144.8	150	161	399	151.0	175	168	411
		MED–High Eff	–	–	55.1	60.0	58.0	295.0	61.3	70.0	65.0	307.0
			25.0	30.1	92.7	100.0	93.0	325.0	98.9	100.0	100.0	337.0
			50.0	60.1	115.2	125.0	127.0	355.0	121.4	150.0	134.0	367.0
			75.0	90.2	145.3	150	162	385	151.5	175	169	397
		HIGH–High Eff	–	–	61.1	70.0	65.0	332.0	67.3	80.0	72.0	344.0
			25.0	30.1	98.7	100.0	100.0	362.0	104.9	110.0	107.0	374.0
			50.0	60.1	121.2	150.0	134.0	392.0	127.4	150.0	141.0	404.0
			75.0	90.2	151.3	175	169	422	157.5	175	176	434
	575–3–60	STD	–	–	37.9	50.0	40.0	206.0	42.7	50.0	45.0	214.0
			24.8	23.9	67.8	70.0	67.0	230.0	72.6	80.0	73.0	238.0
			49.6	47.7	97.5	100.0	95.0	254.0	102.3	110.0	100.0	262.0
			74.4	71.6	109.5	125	122	278	114.3	125	128	286
		MED	–	–	37.4	50.0	39.0	195.0	42.2	50.0	45.0	203.0
			24.8	23.9	67.3	70.0	67.0	219.0	72.1	80.0	72.0	227.0
			49.6	47.7	97.0	100.0	94.0	243.0	101.8	110.0	100.0	251.0
			74.4	71.6	109.0	125	122	267	113.8	125	127	275
		HIGH	–	–	40.1	50.0	42.0	221.0	44.9	50.0	48.0	229.0
			24.8	23.9	70.0	70.0	70.0	245.0	74.8	80.0	75.0	253.0
			49.6	47.7	99.7	100.0	97.0	269.0	104.5	110.0	103.0	277.0
			74.4	71.6	111.7	125	125	293	116.5	125	130	301
		MED–High Eff	–	–	41.3	50.0	44.0	204.0	46.1	50.0	49.0	212.0
			24.8	23.9	71.2	80.0	71.0	228.0	76.0	80.0	77.0	236.0
			49.6	47.7	100.9	110.0	99.0	252.0	105.7	110.0	104.0	260.0
			74.4	71.6	112.9	125	126	276	117.7	125	132	284
		HIGH–High Eff	–	–	41.8	50.0	44.0	231.0	46.6	50.0	50.0	239.0
			24.8	23.9	71.7	80.0	72.0	255.0	76.5	80.0	77.0	263.0
			49.6	47.7	101.4	110.0	99.0	279.0	106.2	110.0	105.0	287.0
			74.4	71.6	113.4	125	127	303	118.2	125	132	311

* Nominal valves, listed as 208/240V, 480V or 600V as appropriate.

LEGEND:

C.O.	–	Convenient outlet
DISC	–	Disconnect
FLA	–	Full load amps
IFM	–	Indoor fan motor
LRA	–	Locked rotor amps
MCA	–	Minimum circuit amps
MOCP	–	Maximum over current protection
P.E.	–	Power exhaust
UNPWRD C.O.	–	Unpowered convenient outlet

NOTES:

1. In compliance with NEC requirements for multimotor and combination load equipment (refer to NEC Articles 430 and 440), the overcurrent protective device for the unit shall be fuse or HACR breaker. Canadian units may be fuse or circuit breaker.
2. **Unbalanced 3-Phase Supply Voltage**
   Never operate a motor where a phase imbalance in supply voltage is greater than 2%. Use the following formula to determine the percentage of voltage imbalance.

$$\text{\% Voltage Imbalance} = 100 \times \frac{\text{max voltage deviation from average voltage}}{\text{average voltage}}$$

Example: Supply voltage is 230-3-60

AB = 224 v
BC = 231 v
AC = 226 v

$$\text{Average Voltage} = \frac{(224 + 231 + 226)}{3} = \frac{681}{3} = 227$$

Determine maximum deviation from average voltage.

(AB) 227 – 224 = 3 v Maximum deviation is 4 v.

(BC) 231 – 227 = 4 v Determine percent of voltage imbalance.

$$\text{\% Voltage Imbalance} = 100 \times \frac{4}{227} = 1.76\%$$

This amount of phase imbalance is satisfactory as it is below the maximum allowable 2%.

IMPORTANT: If the supply voltage phase imbalance is more than 2%, contact your local electric utility company immediately.

548J

TYPICAL WIRING DIAGRAMS

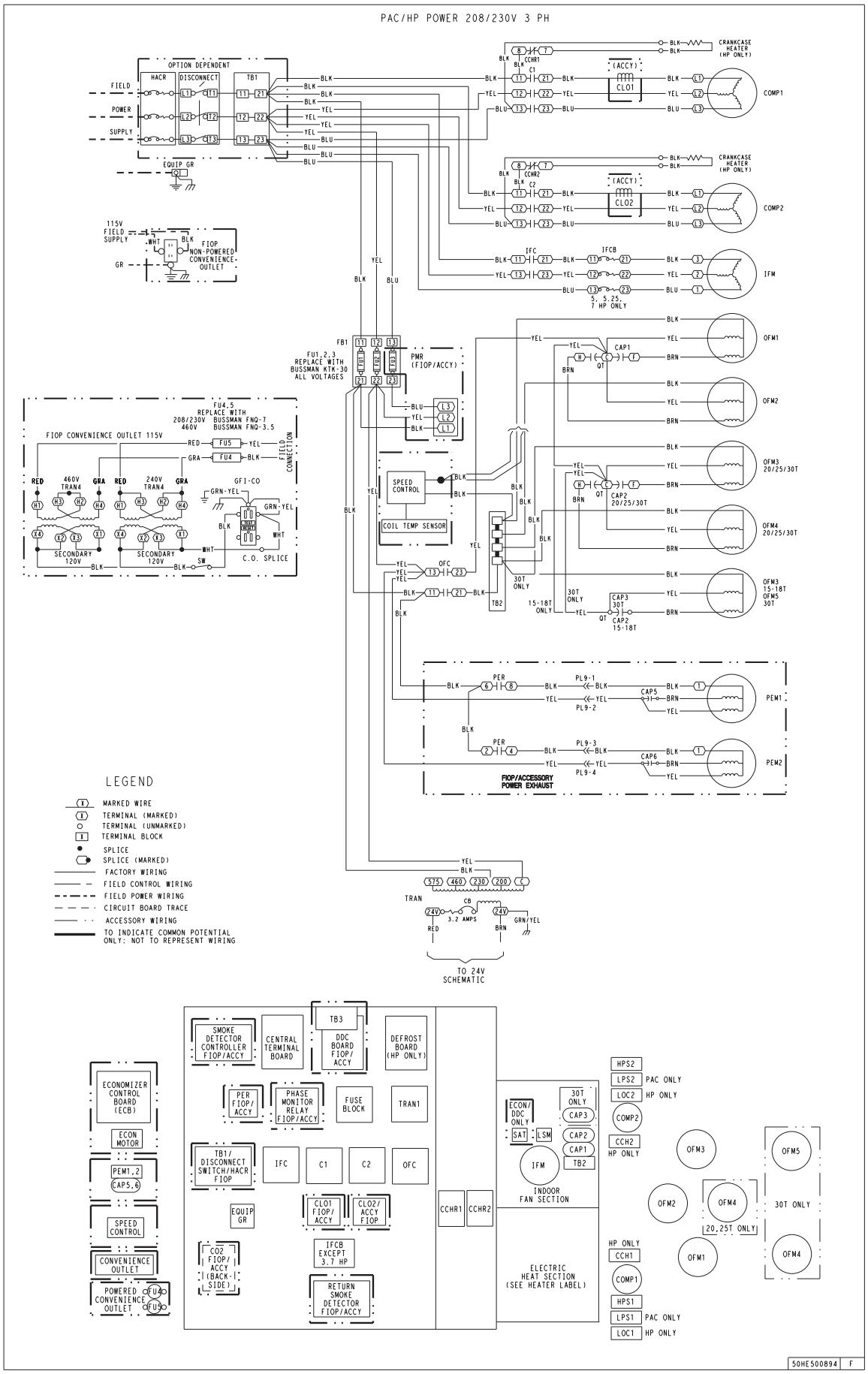

C10582

Fig. 12 - Typical Power Diagram

TYPICAL WIRING DIAGRAMS (cont.)

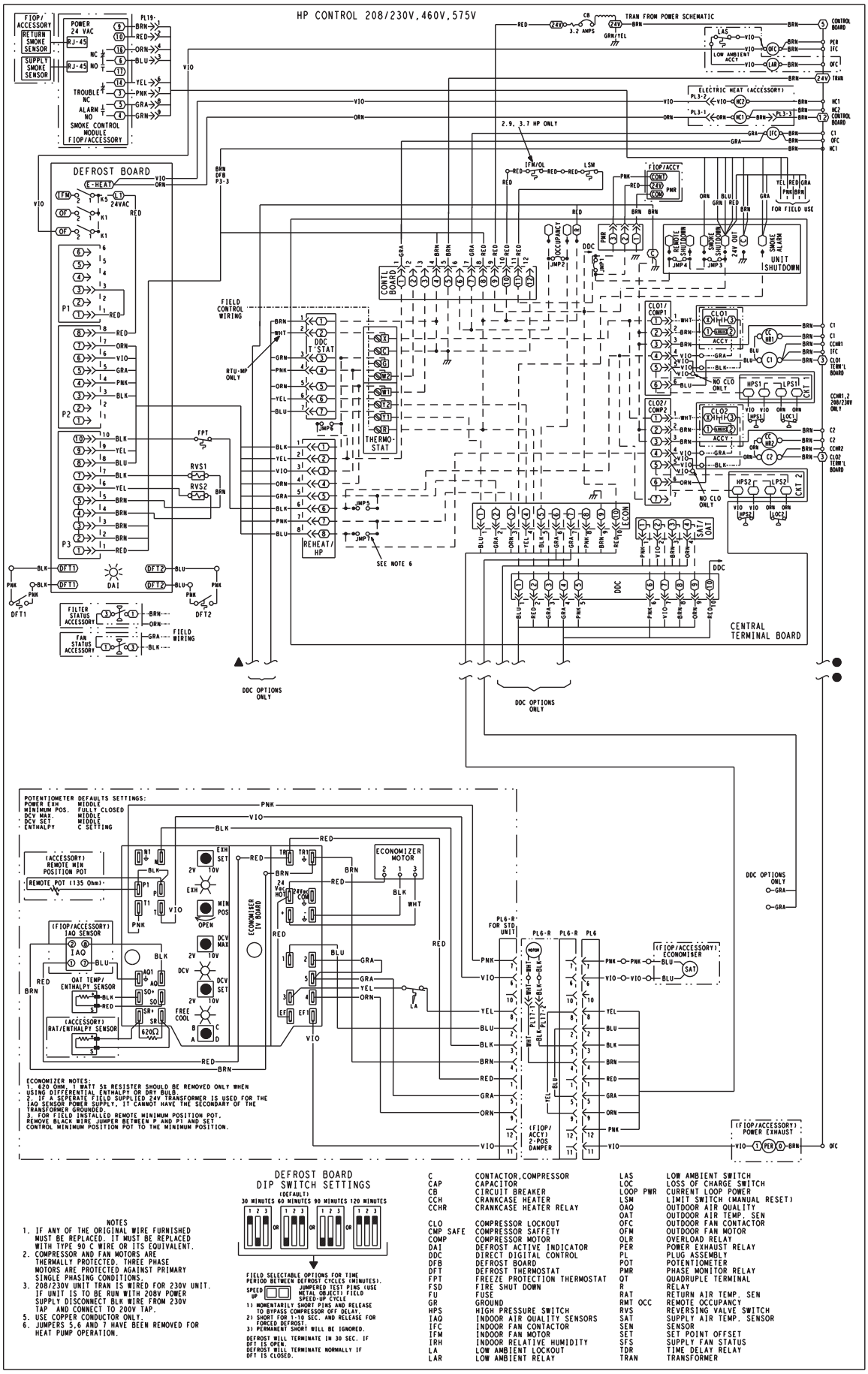

Fig. 13 - Typical Control Diagram

Cooling, unit without economizer

When thermostat calls for cooling, terminals G and Y1 are energized. The indoor fan contactor (IFC), reversing valve solenoid (RVS) and compressor contactor are energized and indoor fan motor, compressor, and outdoor fan starts. The outdoor fan motor runs continuously while unit is cooling.

Two-stage models: If Stage 1 cooling does not satisfy the space load, the space temperature will rise until thermostat calls for Stage 2 cooling (Y2 closes). Defrost Board activates Stage 2 Compressor. Reversing valve 2 switches to Cooling position. Compressor 2 contactor is energized; Compressor 2 starts and Circuit 2 operates in Cooling mode.

When Cooling Stage 2 is satisfied, thermostat Y2 opens. Compressor 2 contactor is de-energized; Compressor 2 stops. Reversing Valve 2 remains energized.

When Cooling Stage 1 is satisfied, thermostat Y1 opens. Compressor 1 contactor is de-energized; Compressor 1 stops. Outdoor fan relay is de-energized; outdoor fans stop. After the Fan Delay period, the Indoor fan contactor is de-energized; indoor fan stops (unless Continuous Fan operation has been selected). Reversing Valve 1 remains energized.

Reversing valve solenoids are energized in Cooling modes. Each solenoid will remain energized until the next Heating mode is initiated for this circuit.

Heating, unit without economizer

Upon a request for heating from the space thermostat, terminal W1 will be energized with 24V. The IFC, outdoor fan contactor (OFC), C1, and C2 will be energized. The indoor fan, outdoor fans, and compressor no. 1, and compressor no. 2 are energized and reversing valves are de-energized and switch position.

If the space temperature continues to fall while W1 is energized, W2 will be energized with 24V, and the heater contactor(s) (HC) will be energized, which will energize the electric heater(s).

When the space thermostat is satisfied, W2 will be de-energized first, and the electric heater(s) will be de-energized.

Upon a further rise in space temperature, W1 will be de-energized.

Two compressor models: When the thermostat calls for heating, terminal W1 is energized. Defrost Board de-energizes both reversing valve solenoids and reversing valves move to Heating position. The indoor fan contactor is energized; indoor fan motor starts. Outdoor fan relay is energized; both outdoor fan motors run. Compressor contactors C1 and C2 are energized; both refrigeration circuits operate in Heating mode.

If Stage 1 heating does not satisfy the space load, the space temperature will fall until thermostat calls for Stage 2 heating (W2 closes). Terminal W2 is energized. Defrost Board issues an output at EHEAT. Heater contactor 1 and heater contactor 2 (if installed) are energized; all electric heaters are energized.

When space heating load is partially satisfied, thermostat terminal W2 is de-energized; heater contactors are de-energized and all electric heat is terminated. Stage 1 heating continues.

When the space heating load is fully satisfied, thermostat terminal W1 is also de-energized.

Reversing valve solenoids remain de-energized until the next call for Cooling mode is initiated.

Cooling, unit with EconoMi$er IV

When free cooling is not available, the compressors will be controlled by the zone thermostat. When free cooling is available, the outdoor air damper is modulated by the EconoMi$er IV control to provide a 50 to 55°F (10° to 13°C) mixed air temperature into the zone. As the mixed air temperature fluctuates above 55 or below 50°F (13° to 10°C), the dampers will be modulated (open or close) to bring the mixed air temperature back within control.

If mechanical cooling is utilized with free cooling, the outdoor air damper will maintain its current position at the time the compressor is started. If the increase in cooling capacity causes the mixed air temperature to drop below 45°F (7°C), then the outdoor air damper position will be decreased to the minimum position. If the mixed air temperature continues to fall, the outdoor air damper will close. Control returns to normal once the mixed air temperature rises above 48°F (9°C).

If optional power exhaust is installed, as the outdoor air damper opens and closes, the power exhaust fans will be energized and de-energized.

If field-installed accessory CO_2 sensors are connected to the EconoMi$er IV control, a demand controlled ventilation strategy will begin to operate. As the CO_2 level in the zone increases above the CO_2 setpoint, the minimum position of the damper will be increased proportionally. As the CO_2 level decreases because of the increase in fresh air, the outdoor air damper will be proportionally closed.

For EconoMi$er IV operation, there must be a thermostat call for the fan (G). If the unit is occupied and the fan is on, the damper will operate at minimum position. Otherwise, the damper will be closed.

When the EconoMi$er IV control is in the occupied mode and a call for cooling exists (Y1 on the thermostat), the control will first check for indoor fan operation. If the fan is not on, then cooling will not be activated. If the fan is on, then the control will open the EconoMi$er IV damper to the minimum position.

On the initial power to the EconoMi$er IV control, it will take the damper up to $2^1/_2$ minutes before it begins to position itself. Any change in damper position will take up to 30 seconds to initiate. Damper movement from full closed to full open (or vice versa) will take between $1^1/_2$ and $2^1/_2$ minutes.

If free cooling can be used as determined from the appropriate changeover command (switch, dry bulb, enthalpy curve, differential dry bulb, or differential enthalpy), then the control will modulate the dampers open to maintain the mixed air temperature setpoint at 50° to 55°F (10° to 13°C).

If there is a further demand for cooling (cooling second stage — Y2 is energized), then the control will bring on compressor stage 1 to maintain the mixed air temperature setpoint. The EconoMi$er IV damper will be open at maximum position. EconoMi$er IV operation is limited to a single compressor.

Heating, unit with EconoMi$er

When the room temperature calls for heat through terminal W1, the indoor (evaporator) fan contactor (IFC) and heater contactor no. 1 (HC1) are energized and the reversing valve(s) de-energize and switches position. On units equipped for 2 stages of heat, when additional heat is needed, heater contactor no. 2 is energized through W2. The economizer damper moves to the minimum position. When the thermostat is satisfied, the damper moves to the fully closed position.

Defrost

When the temperature of the outdoor coil drops below 28°F (-2°C) as sensed by the defrost thermostat (DFT2) and the defrost timer is at the end of a timed period (adjustable at 30, 60, 90 or 120 minutes), reversing valve solenoids (RVS1 and RVS2) are energized and the OFC is de-energized. This switches the position of the reversing valves and shuts off the outdoor fan. The electric heaters (if installed) will be energized.

The unit continues to defrost until the coil temperature as measured by DFT2 reaches 65°F (18°C), or the duration of defrost cycle completes a 10-minute period.

During the Defrost mode, if circuit 1 defrosts first, RVS1 will oscillate between Heating and Cooling modes until the Defrost mode is complete.

At the end of the defrost cycle, the electric heaters (if installed) will be de-energized; the reversing valves switch and the outdoor fan motor will be energized. The unit will now operate in the Heating mode.

If the space thermostat is satisfied during a defrost cycle, the unit will continue in the Defrost mode until the time or temperature constraints are satisfied.

Automatic changeover

When the system selection switch is set at AUTO. position, unit automatically changes from heating operation to cooling operation when the temperature of the conditioned space rises to the cooling level setting. When the temperature of the conditioned space falls to the heating level setting, unit automatically changes from cooling to heating operation (with a 3°F deadband in between).

Continuous air circulation

Turn unit power on. Set system control at OFF position. Set fan switch at ON position. The indoor fan contactor is energized through the thermostat switch and the indoor fan runs continuously.

Emergency heat

When the switch is on (thermostat is set to the EM HT position), compressor circuit and outdoor thermostats are bypassed, and the second stage of thermostat energizes the indoor blower and the electric resistance heaters.

GUIDE SPECIFICATIONS - 548J17, 24

Note about this specification:

These specifications are written in “Masterformat” as published by the Construction Specification Institute. Please feel free to copy this specification directly into your building spec.

Cooling Only/Electric Heat Packaged Rooftop

HVAC Guide Specifications

Size Range: **15 and 20 Nominal Tons**

Section	Description

23 06 80 Schedules for Decentralized HVAC Equipment

23 06 80.13 Decentralized Unitary HVAC Equipment Schedule

23 06 80.13.A. Rooftop unit schedule

1. Schedule is per the project specification requirements.

23 07 16 HVAC Equipment Insulation

23 07 16.13 Decentralized, Rooftop Units:

23 07 16.13.A. Evaporator fan compartment:

1. Interior cabinet surfaces shall be insulated with a minimum 1/2-in. thick, minimum 1 1/2 lb density, flexible fiberglass insulation bonded with a phenolic binder, neoprene coated on the air side.
2. Insulation and adhesive shall meet NFPA 90A requirements for flame spread and smoke generation.

23 07 16.13.B. Electric heat compartment:

1. Aluminum foil-faced fiberglass insulation shall be used.
2. Insulation and adhesive shall meet NFPA 90A requirements for flame spread and smoke generation.

23 09 13 Instrumentation and Control Devices for HVAC

23 09 13.23 Sensors and Transmitters

23 09 13.23.A. Thermostats

1. Thermostat must
   a. energize both “W” and “G” when calling for heat.
   b. have capability to energize 2 different stages of cooling, and 2 different stages of heating.
   c. include capability for occupancy scheduling.

23 09 23 Direct-digital Control system for HVAC

23 09 23.13 Decentralized, Rooftop Units:

23 09 23.13.A. N/A

1. Shall be ASHRAE 62-2001 compliant.
2. Shall accept 18-32VAC input power.
3. Shall have an operating temperature range from -40°F (-40°C) to 158°F (70°C), 10% - 95% RH (non-condensing).
4. Shall include an integrated economizer controller to support an economizer with 4 to 20 mA actuator input and no microprocessor controller.
5. Controller shall accept the following inputs: space temperature, setpoint adjustment, outdoor air temperature, indoor air quality, outdoor air quality, indoor relative humidity, compressor lock-out, fire shutdown, enthalpy, fan status, remote time clock/door switch.
6. Shall accept a CO_2 sensor in the conditioned space, and be Demand Control Ventilation (DCV) ready.
7. Shall provide the following outputs: Economizer, fan, cooling stage 1, cooling stage 2, heat stage 1, heat stage 2, heat stage 3/ exhaust/ reversing valve/ dehumidify/ occupied.
8. Unit shall provide surge protection for the controller through a circuit breaker.
9. Shall be Internet capable, and communicate at a Baud rate of 38.4K or faster

10. Shall have an LED display independently showing the status of activity on the communication bus, and processor operation.
11. Shall include an EIA-485 protocol communication port, an access port for connection of either a computer or a Bryant technician tool, an EIA-485 port for network communication to intelligent space sensors and displays, and a port to connect an optional LonWorks plug-in communications card.
12. Shall have built-in support for Bryant technician tool.
13. Software upgrades will be accomplished by local download. Software upgrades through chip replacements are not allowed.
14. Shall be shock resistant in all planes to 5G peak, 11ms during operation, and 100G peak, 11ms during storage.
15. Shall be vibration resistant in all planes to 1.5G @ 20-300 Hz.
16. Shall support a bus length of 4000 ft max, 60 devices per 1000 ft section, and 1 RS-485 repeater per 1000ft sections.

23 09 23.13.B. RTU Open Multi protocol, direct digital controller:

1. Shall be ASHRAE 62-2001 compliant.
2. Shall accept 18-30VAC, 50-60Hz, and consumer 15VA or less power.
3. Shall have an operating temperature range from -40°F (-40°C) to 130°F (54°C), 10% - 90% RH (non-condensing).
4. Shall include built-in protocol for BACNET (MS/TP and PTP modes), Modbus (RTU and ASCII), Johnson N2 and LonWorks. LonWorks Echelon processor required for all Lon applications shall be contained in separate communication board.
5. Shall allow access of up to 62 network variables (SNVT). Shall be compatible with all open controllers
6. Baud rate Controller shall be selectable using a dipswitch.
7. Shall have an LED display independently showing the status of serial communication, running, errors, power, all digital outputs, and all analog inputs.
8. Shall accept the following inputs: space temperature, setpoint adjustment, outdoor air temperature, indoor air quality, outdoor air quality, compressor lock-out, fire shutdown, enthalpy switch, and fan status/filter status/ humidity/ remote occupancy.
9. Shall provide the following outputs: economizer, fan, cooling stage 1, cooling stage 2, heat stage 1, heat stage 2, heat stage 3/ exhaust/ reversing valve.
10. Shall have built-in surge protection circuitry through solid state polyswitches. Polyswitches shall be used on incoming power and network connections. Polyswitches will return to normal when the “trip” condition clears.
11. Shall have a battery back-up capable of a minimum of 10,000 hours of data and time clock retention during power outages.
12. Shall have built-in support for Bryant technician tool.
13. Shall include an EIA-485 protocol communication port, an access port for connection of either a computer or a Bryant technician tool, an EIA-485 port for network communication to intelligent space sensors and displays, and a port to connect an optional LonWorks communications card.
14. Software upgrades will be accomplished by either local or remote download. No software upgrades through chip replacements are allowed.

23 09 33 Electric and Electronic Control System for HVAC

23 09 33.13 Decentralized, Rooftop Units:

23 09 33.13.A. General:

1. Shall be complete with self-contained low-voltage control circuit protected by a resettable circuit breaker on the 24-v transformer side. Transformer shall have 75VA capability.
2. Shall utilize color-coded wiring.
3. Shall include a central control terminal board to conveniently and safely provide connection points for vital control functions such as: smoke detectors, phase monitor, economizer, thermostat, DDC control options, and low and high pressure switches.
4. Unit shall include a minimum of one 8-pin screw terminal connection board for connection of control wiring.
5. Shall include integrated defrost system to prevent excessive frost accumulation during heating duty, and shall be controlled as follows:
   a. Defrost shall be initiated on the basis of time and coil temperature.
   b. A 30,60,90,120 minute timer shall activate the defrost cycle only if the coil temperature is low enough to indicate a heavy frost condition.
   c. Defrost cycle shall terminate when defrost thermostat is satisfied and shall have a positive termination time of 10 minutes.

6. Defrost system shall also include:
   a. Defrost Cycle Indicator LED.
   b. Dip switch selectable defrost time between 30, 60, 90 and 120 minutes. Factory set at 30 minutes.
   c. Molded plug connection to insure proper connection.

23 09 33.23.B. Safeties:

1. Compressor over-temperature, over current.
2. Loss of charge switch.
   a. Units with 2 compressors shall have different sized connectors for the circuit 1 and circuit 2 loss of charge switches. They shall physically prevent the cross-wiring of the safety switches between circuits 1 and 2.
   b. Loss of charge switch shall use different color wire than the high pressure switch. The purpose is to assist the installer and service technician to correctly wire and or troubleshoot the rooftop unit.
3. High pressure switch
   a. Units with 2 compressors shall have different sized connectors for the circuit 1 and circuit 2 high pressure switches. They shall physically prevent the cross-wiring of the safety switches between circuits 1 and 2.
   b. High pressure switch shall use different color wire than the low pressure switch. The purpose is to assist the installer and service technician to correctly wire and or troubleshoot the rooftop unit.
4. Freeze protection thermostat, evaporator coil.
5. Automatic reset, motor thermal overload protector.

23 09 93 Sequence of Operations for HVAC Controls

23 09 93.13 Decentralized, Rooftop Units:

23 09 93.13 INSERT SEQUENCE OF OPERATION

23 40 13 Panel Air Filters

23 40 13.13 Decentralized, Rooftop Units:

23 40 13.13.A. Standard filter section

1. Shall consist of factory-installed, low velocity, throwaway 2-in. thick fiberglass filters of commercially available sizes.
2. Unit shall use only one filter size. Multiple sizes are not acceptable.
3. Filters shall be accessible through a dedicated, weather tight panel.
4. 4-in. filter capabilities shall be capable with pre engineered and approved Bryant filter track field installed accessory. This kit requires field furnished filters.

23 81 19 Self-Contained Air Conditioners

23 81 19.13 Medium-Capacity Self-Contained Air Conditioners (548J-17,24)

23 81 19.13.A. General

1. Outdoor, rooftop mounted, electrically controlled, heating and cooling unit utilizing a(n) hermetic scroll compressor(s) for cooling duty and gas combustion for heating duty.
2. Factory assembled, single-piece heating and cooling rooftop unit. Contained within the unit enclosure shall be all factory wiring, piping, controls, and special features required prior to field start-up.
3. Unit shall use environmentally safe, Puron refrigerant.
4. Unit shall be installed in accordance with the manufacturer's instructions.
5. Unit must be selected and installed in compliance with local, state, and federal codes.

23 81 19.13.B. Quality Assurance

1. Unit meets ASHRAE 90.1-2007 minimum efficiency requirements.
2. Unit shall be rated in accordance with AHRI Standard 340/360.
3. Unit shall be designed to conform to ASHRAE 15.
4. Unit shall be ETL-tested and certified in accordance with ANSI Z21.47 Standards and ETL-listed and certified under Canadian standards as a total package for safety requirements.
5. Insulation and adhesive shall meet NFPA 90A requirements for flame spread and smoke generation.
6. Unit casing shall be capable of withstanding 500-hour salt spray exposure per ASTM B117 (scribed specimen).
7. Unit casing shall be capable of withstanding Federal Test Method Standard No. 141 (Method 6061) 5000-hour salt spray.
8. Unit shall be designed in accordance with ISO 9001:2008, and shall be manufactured in a facility registered by ISO 9001:2008.
9. Roof curb shall be designed to conform to NRCA Standards.

10. Unit shall be subjected to a completely automated run test on the assembly line. The data for each unit will be stored at the factory, and must be available upon request.
11. Unit shall be designed in accordance with UL Standard 1995, including tested to withstand rain.
12. Unit shall be constructed to prevent intrusion of snow and tested to prevent snow intrusion into the control box up to 40 mph.
13. Unit shake tested to assurance level 1, ASTM D4169 to ensure shipping reliability.
14. High Efficient Motors listed shall meet section 313 of the Energy Independence and Security Act of 2007 (EISA 2007).

23 81 19.13.C. Delivery, Storage, and Handling

1. Unit shall be stored and handled per manufacturer's recommendations.
2. Lifted by crane requires either shipping top panel or spreader bars.
3. Unit shall only be stored or positioned in the upright position.

23 81 19.13.D. Project Conditions

1. As specified in the contract.

23 81 19.13.E. Project Conditions

1. As specified in the contract.

23 81 19.13.F. Operating Characteristics

1. Unit shall be capable of starting and running at 115°F (46°C) ambient outdoor temperature, meeting maximum load criteria of AHRI Standard 340/360 at ± 10% voltage.
2. Compressor with standard controls shall be capable of operation from 30°F (-1°C) , ambient outdoor temperatures. Accessory kits are necessary if mechanically cooling at ambient temperatures below 30°F (-1°C).
3. Unit shall discharge supply air vertically or horizontally as shown on contract drawings.
4. Unit shall be factory configured and ordered for vertical supply & return configurations.
5. Unit shall be factory furnished for either vertical or horizontal configuration without the use of special conversion kits. No field kits conversion is possible.
6. Unit shall be capable of mixed operation: vertical supply with horizontal return or horizontal supply with vertical return.

23 81 19.13.G. Electrical Requirements

1. Main power supply voltage, phase, and frequency must match those required by the manufacturer.

23 81 19.13.H. Unit Cabinet

1. Unit cabinet shall be constructed of galvanized steel, and shall be bonderized and coated with a pre-painted baked enamel finish on all externally exposed surfaces.
2. Unit cabinet exterior paint shall be: film thickness, (dry) 0.003 inches minimum, gloss (per ASTM D523, 60°F): 60, Hardness: H-2H Pencil hardness.
3. Evaporator fan compartment interior cabinet insulation shall conform to AHRI Standards 340/360 minimum exterior sweat criteria. Interior surfaces shall be insulated with a minimum 1/2-in. thick, 1 lb density, flexible fiberglass insulation, neoprene coated on the air side. Aluminum foil-faced fiberglass insulation shall be used in the heat compartment.
4. Base of unit shall have a minimum of four locations for factory thru-the-base electrical connections. Connections shall be internal to the cabinet to protect from environmental issues.
5. Base Rail
   a. Unit shall have base rails on a minimum of 2 sides.
   b. Holes shall be provided in the base rails for rigging shackles to facilitate maneuvering and overhead rigging.
   c. Holes shall be provided in the base rail for moving the rooftop by fork truck.
   d. Base rail shall be a minimum of 16 gauge thickness.
6. Condensate pan and connections:
   a. Shall be a sloped condensate drain pan made of a non-corrosive material.
   b. Shall comply with ASHRAE Standard 62.
   c. Shall use a 3/4-in -14 NPT drain connection at the end of the drain pan. Connection shall be made per manufacturer's recommendations.
7. Top panel:
   a. Shall be a multi-piece top panel linked with water tight flanges and interlocking systems.
8. Electrical Connections
   a. All unit power wiring shall enter unit cabinet at a single, factory-prepared, knockout location.
   b. Thru-the-base capability

(1.) Standard unit shall have a thru-the-base electrical location(s) using a raised, embossed portion of the unit basepan.

(2.) Optional, factory-approved, water-tight connection method must be used for thru-the-base electrical connections.

(3.) No basepan penetration, other than those authorized by the manufacturer, is permitted.

9. Component access panels (standard)
   a. Cabinet panels shall be easily removable for servicing.
   b. Unit shall have one factory installed, tool-less, removable, filter access panel.
   c. Panels covering control box and filters shall have molded composite handles while the blower access door shall have an integrated flange for easy removal.
   d. Handles shall be UV modified, composite. permanently attached, and recessed into the panel.
   e. Screws on the vertical portion of all removable access panel shall engage into heat resistant, molded composite collars.
   f. Collars shall be removable and easily replaceable using manufacturer recommended parts.

23 81 19.13.I. N/A

23 81 19.13.J. Coils

1. Standard Aluminum/Copper Coils: on all models.
   a. Standard evaporator and condenser coils shall have aluminum lanced plate fins mechanically bonded to seamless internally grooved copper tubes with all joints brazed.
   b. Evaporator coils shall be leak tested to 150 psig, pressure tested to 450 psig, and qualified to UL 1995 burst test at 1775 psig.
   c. Condenser coils shall be leak tested to 150 psig, pressure tested to 650 psig, and qualified to UL 1995 burst test at 1980 psig.
2. Optional Pre-coated aluminum fin condenser coils: on all models.
   a. Shall have a durable epoxy-phenolic coating to provide protection in mildly corrosive coastal environments.
   b. Coating shall be applied to the aluminum fin stock prior to the fin stamping process to create an inert barrier between the aluminum fin and copper tube.
   c. Epoxy-phenolic barrier shall minimize galvanic action between dissimilar metals.
3. Optional Copper-fin evaporator and condenser coils: on all models.
   a. Shall be constructed of copper fins mechanically bonded to copper tubes and copper tube sheets.
   b. Galvanized steel tube sheets shall not be acceptable.
   c. A polymer strip shall prevent coil assembly from contacting the sheet metal coil pan to minimize potential for galvanic corrosion between coil and pan.
4. Optional E-coated aluminum-fin evaporator and condenser coils: on all models.
   a. Shall have a flexible epoxy polymer coating uniformly applied to all coil surface areas without material bridging between fins.
   b. Coating process shall ensure complete coil encapsulation of tubes, fins and headers.
   c. Color shall be high gloss black with gloss per ASTM D523-89.
   d. Uniform dry film thickness from 0.8 to 1.2 mil on all surface areas including fin edges.
   e. Superior hardness characteristics of 2H per ASTM D3363-92A and cross-hatch adhesion of 4B-5B per ASTM D3359-93.
   f. Impact resistance shall be up to 160 in.-lb (ASTM D2794-93).
   g. Humidity and water immersion resistance shall be up to minimum 1000 and 250 hours respectively (ASTM D2247-92 and ASTM D870-92).
   h. Corrosion durability shall be confirmed through testing to be no less than 1000 hours salt spray per ASTM B117-90.

23 81 19.13.K. Refrigerant Components

1. Refrigerant circuit shall include the following control, safety, and maintenance features:
   a. Fixed orifice metering system shall prevent mal-distribution of two-phase refrigerant by including multiple fixed orifice devices in each refrigeration circuit. Each orifice is to be optimized to the coil circuit it serves.
   b. High capacity refrigerant filter drier on each refrigerant circuit.
   c. Service gauge connections on suction and discharge lines.
   d. Pressure gauge access through a specially designed screen on the side of the unit.

e. Precision-sized suction line accumulator on each refrigerant circuit shall protect from oil being removed from the scroll compressor rotating orbiter and plate during the activation of the defrost mode and switching back and forth from cooling and heating operations.

2. Compressors
   a. Unit shall use one fully hermetic, scroll compressor for each independent refrigeration circuit.
   b. Models shall be available with 2 compressor/2 stage cooling.
   c. Compressor motors shall be cooled by refrigerant gas passing through motor windings.
   d. Compressors shall be internally protected from high discharge temperature conditions.
   e. Compressors shall be protected from an over-temperature and over-amperage conditions by an internal, motor overload device.
   f. Compressor shall be factory mounted on rubber grommets.
   g. Compressor motors shall have internal line break thermal, current overload and high pressure differential protection.
   h. Crankcase heaters shall be provided by the factory.
   i. 23 81 19.13.L. Filter Section

548J

1. Filters access is specified in the unit cabinet section of this specification.
2. Filters shall be held in place by a preformed slide out filter tray, facilitating easy removal and installation.
3. Shall consist of factory-installed, low velocity, throw-away 2-in. thick fiberglass filters.
4. Filters shall be standard, commercially available sizes.
5. Only one size filter per unit is allowed.
6. 4-in filter capability is possible with a field installed pre engineered slide out filter track accessory. 4-in filters are field furnished.

23 81 19.13.M. Evaporator Fan and Motor

1. Evaporator fan motor:
   a. Shall have inherent automatic-reset thermal overload protection or circuit breaker.
   b. Shall have a maximum continuous bhp rating for continuous duty operation; no safety factors above that rating shall be required.
2. Belt-driven Evaporator Fan:
   a. Belt drive shall include an adjustable-pitch motor pulley and belt break protection system.
   b. Shall use rigid pillow block bearing system with lubricate fittings at are accessible or lubrication line.
   c. Blower fan shall be double-inlet type with forward-curved blades.
   d. Shall be constructed from steel with a corrosion resistant finish and dynamically balanced.

23 81 19.13.N. Condenser Fans and Motors

1. Condenser fan motors:
   a. Shall be a totally enclosed motor.
   b. Shall use permanently lubricated bearings.
   c. Shall have inherent thermal overload protection with an automatic reset feature.
   d. Shall use a shaft-down design.
2. Condenser Fans:
   a. Shall be a direct-driven propeller type fan.
   b. Shall have aluminum blades riveted to corrosion-resistant steel spiders and shall be dynamically balanced.

23 81 19.13.O. Special Features, Options and Accessories

1. Integrated Economizers:
   a. Integrated, gear-driven parallel modulating blade design type capable of simultaneous economizer and compressor operation.
   b. Independent modules for vertical or horizontal return configurations shall be available. Vertical and horizontal return modules shall be available as a factory installed option.
   c. Damper blades shall be galvanized steel with composite gears. Plastic or composite blades on intake or return shall not be acceptable.
   d. Shall include all hardware and controls to provide free cooling with outdoor air when temperature and/or humidity are below setpoints.
   e. Shall be equipped with gear driven dampers for both the outdoor ventilation air and the return air for positive air stream control.
   f. Shall be equipped with low-leakage dampers, not to exceed 2% leakage at 1 in. wg pressure differential.
   g. Shall be capable of introducing up to 100% outdoor air.

h. Shall be equipped with a barometric relief damper capable of relieving up to 100% return air.
i. Shall be designed to close damper(s) during loss-of-power situations with spring return built into motor.
j. Dry bulb outdoor-air temperature sensor shall be provided as standard. Outdoor air sensor setpoint shall be adjustable and shall range from 40 to 100°F / 4 to 38°C. Additional sensor options shall be available as accessories.
k. The economizer controller shall also provide control of an accessory power exhaust unit. function. Factory set at 100%, with a range of 0% to 100%.
l. The economizer shall maintain minimum airflow into the building during occupied period and provide design ventilation rate for full occupancy. A remote potentiometer may be used to override the damper setpoint.
m. Dampers shall be completely closed when the unit is in the unoccupied mode.
n. Economizer controller shall accept a 2-10Vdc CO_2 sensor input for IAQ/DCV control. In this mode, dampers shall modulate the outdoor-air damper to provide ventilation based on the sensor input.
o. Compressor lockout sensor shall open at 35°F (2°C) and close closes at 50°F (10°C).
p. Actuator shall be direct coupled to economizer gear. No linkage arms or control rods shall be acceptable.
q. Economizer controller shall provide indications when in free cooling mode, in the DCV mode, or the exhaust fan contact is closed.

2. Two-Position Motorized Damper
   a. Damper shall be a Two-Position Damper. Damper travel shall be from the full closed position to the field adjustable %-open setpoint.
   b. Damper shall include adjustable damper travel from 25% to 100% (full open).
   c. Damper shall include single or dual blade, gear driven dampers and actuator motor.
   d. Actuator shall be direct coupled to damper gear. No linkage arms or control rods shall be acceptable.
   e. Damper will admit up to 100% outdoor air for applicable rooftop units.
   f. Damper shall close upon indoor (evaporator) fan shutoff and/or loss of power.
   g. The damper actuator shall plug into the rooftop unit's wiring harness plug. No hard wiring shall be required.
   h. Outside air hood shall include aluminum water entrainment filter.
3. Manual damper
   a. Manual damper package shall consist of damper, air inlet screen, and rain hood which can be preset to admit up to 25% outdoor air for year round ventilation.
4. Head Pressure Control Package
   a. Controller shall control coil head pressure by condenser-fan speed modulation or condenser-fan cycling and wind baffles.
   b. Shall consist of solid-state control and condenser-coil temperature sensor to maintain condensing temperature between 90°F (32°C) and 110°F (43°C) at outdoor ambient temperatures down to -20°F (-29°C).
5. Condenser Coil Hail Guard Assembly
   a. Shall protect against damage from hail.
   b. Shall be louvered style design.
6. Unit-Mounted, Non-Fused Disconnect Switch:
   a. Switch shall be factory-installed, internally mounted.
   b. National Electric Code (NEC) and UL approved non-fused switch shall provide unit power shutoff.
   c. Shall be accessible from outside the unit.
   d. Shall provide local shutdown and lockout capability.
7. Convenience Outlet:
   a. Powered convenience outlet.
      (1.) Outlet shall be powered from main line power to the rooftop unit.
      (2.) Outlet shall be powered from line side of disconnect by installing contractor, as required by code. If outlet is powered from load side of disconnect, unit electrical ratings shall be UL certified and rated for additional outlet amperage.
      (3.) Outlet shall be factory-installed and internally mounted with easily accessible 115-v female receptacle.
      (4.) Outlet shall include 15 amp GFI receptacles with independent fuse protection.
      (5.) Voltage required to operate convenience outlet shall be provided by a factory-installed step-down transformer.
      (6.) Outlet shall be accessible from outside the unit.
      (7.) Outlet shall include a field-installed "Wet in Use" cover.
   b. Non-Powered convenience outlet.

(1.) Outlet shall be powered from a separate 115/120v power source.
(2.) A transformer shall not be included.
(3.) Outlet shall be factory-installed and internally mounted with easily accessible 115-v female receptacle.
(4.) Outlet shall include 15 amp GFI receptacles with independent fuse protection.
(5.) Outlet shall be accessible from outside the unit.
(6.) Outlet shall include a field-installed "Wet in Use" cover.

8. Thru-the-Base Connectors:
   a. Kits shall provide connectors to permit electrical connections to be brought to the unit through the unit basepan.
   b. Minimum of four connection locations per unit.
9. Fan/Filter Status Switch:
   a. Switch shall provide status of indoor evaporator fan (ON/OFF) or filter (CLEAN/DIRTY).
   b. Status shall be displayed either over communication bus (when used with direct digital controls) or with an indicator light at the thermostat.
10. Centrifugal Power Exhaust:
   a. Power exhaust shall be used in conjunction with an integrated economizer.
   b. Independent modules for vertical or horizontal return configurations shall be available.
   c. Horizontal power exhaust is shall be mounted in return ductwork.
   d. Power exhaust shall be controlled by economizer controller operation. Exhaust fans shall be energized when dampers open past the 0-100% adjustable setpoint on the economizer control.
11. Roof Curbs (Vertical):
   a. Full perimeter roof curb with exhaust capability providing separate air streams for energy recovery from the exhaust air without supply air contamination.
   b. Formed galvanized steel with wood nailer strip and shall be capable of supporting entire unit weight.
   c. Permits installation and securing of ductwork to curb prior to mounting unit on the curb.
12. Adapter Curb (Vertical):
   a. Full perimeter, fully assembled and welded roof curb with exhaust capability providing separate air streams for energy recovery from the exhaust air without supply air contamination.
   b. Formed galvanized steel with wood nailer strip and shall be capable of supporting entire unit weight.
13. High-Static Indoor Fan Motor(s) and Drive(s):
   a. High-static motor(s) and drive(s) shall be factory-installed to provide additional performance range.
14. Thru-the-Bottom Utility Connectors:
   a. Kit shall provide connectors to permit gas and electrical connections to be brought to the unit through the basepan.
15. Outdoor Air Enthalpy Sensor:
   a. The outdoor air enthalpy sensor shall be used to provide single enthalpy control. When used in conjunction with a return air enthalpy sensor, the unit will provide differential enthalpy control. The sensor allows the unit to determine if outside air is suitable for free cooling.
16. Return Air Enthalpy Sensor:
   a. The return air enthalpy sensor shall be used in conjunction with an outdoor air enthalpy sensor to provide differential enthalpy control.
17. Indoor Air Quality (CO_2) Sensor:
   a. Shall be able to provide demand ventilation indoor air quality (IAQ) control.
   b. The IAQ sensor shall be available in duct mount, wall mount, or wall mount with LED display. The setpoint shall have adjustment capability.
18. Smoke detectors:
   a. Shall be a Four-Wire Controller and Detector.
   b. Shall be environmental compensated with differential sensing for reliable, stable, and drift-free sensitivity.
   c. Shall use magnet-activated test/reset sensor switches.
   d. Shall have tool-less connection terminal access.
   e. Shall have a recessed momentary switch for testing and resetting the detector.
   f. Controller shall include:
   (1.) One set of normally open alarm initiation contacts for connection to an initiating device circuit on a fire alarm control panel.
   (2.) Two Form-C auxiliary alarm relays for interface with rooftop unit or other equipment.

(3.) One Form-C supervision (trouble) relay to control the operation of the Trouble LED on a remote test/reset station.

(4.) Capable of direct connection to two individual detector modules.

(5.) Can be wired to up to 14 other duct smoke detectors for multiple fan shutdown applications.

19. Time Guard
    a. Shall prevent compressor short cycling by providing a 5-minute delay (±2 minutes) before restarting a compressor after shutdown for any reason.
    b. One device shall be required per compressor.
20. Barometric Hood (Horizontal Economizer Applications)
    a. Shall be required when a horizontal economizer and barometric relief are required. Barometric relief damper must be installed in the return air (horizontal) duct work. This hood provides weather protection.
21. Electric Heat:
    a. Heating Section

(1.) Heater element open coil resistance wire, nickel-chrome alloy, 0.29 inches inside diameter, strung through ceramic insulators mounted on metal frame. Coil ends are staked and welded to terminal screw slots.

(2.) Heater assemblies are provided with integral fusing for protection of internal heater circuits not exceeding 48 amps each. Auto reset thermo limit controls, magnetic heater contactors (24 v coil) and terminal block all mounted in electric heater control box (minimum 18 ga galvanized steel) attached to end of heater assembly.

©2011 Bryant Heating & Cooling Systems • 7310 W. Morris St. • Indianapolis, IN 46231 Printed in U.S.A. Edition Date: 2/11 **Catalog No. PDS548J–06**

Manufacturer reserves the right to discontinue, or change at any time, specifications or designs without notice and without incurring obligations. Replaces: PDS548J–04