D5MVHA
High Wall Ductless System
Sizes 09 to 24

Product Data

Fig. 1 – Sizes 09 to 24

Fig. 2 – Remote Controller

NOTE: Images are for illustration purposes **only**. Actual models may differ slightly.

TABLE OF CONTENTS

	Page
INDUSTRY LEADING FEATURES / BENEFITS	1
MODEL NUMBER NOMENCLATURE	2
SAFETY CONSIDERATIONS	3
STANDARD FEATURES AND ACCESSORIES	5
DIMENSIONS	6
CLEARANCES	6
SPECIFICATIONS	7
AIR FLOW DATA	9
MOISTURE REMOVAL	9
SOUND PRESSURE	9
APPLICATION DATA	9
WIRING	10
WIRING DIAGRAMS	11
GUIDE SPECIFICATIONS	12

INDUSTRY LEADING FEATURES / BENEFITS

A PERFECT BALANCE BETWEEN BUDGET LIMITS, ENERGY SAVINGS AND COMFORT

The **D5MVHA** series ductless systems are a matched combination of an outdoor condensing unit and an indoor fan coil unit connected only by refrigerant tubing and wires.

The fan coil is mounted on the wall, near the ceiling. This selection of fan coils permits creative solutions to design problems such as:

- Add-ons to current space (an office or family room addition)
- Special space requirements
- When changes in the load cannot be handled by the existing system
- When adding air conditioning to spaces that are heated by hydronic or electric heat and have no ductwork
- Historical renovations or any application where preserving the look of the original structure is essential.

The ideal compliment to your ducted system when it is impractical or prohibitively expensive to use ductwork. These compact indoor fan coil units take up very little space in the room and do not obstruct windows. The fan coils are attractively styled to blend with most room decors. Advanced system components incorporate innovative technology to provide reliable cooling performance at low sound levels.

LOW SOUND LEVELS

When noise is a concern, the ductless systems are the answer. The indoor units are whisper quiet. There are no compressors indoors, either in the conditioned space or directly over it, and there is none of the noise usually generated by air being forced through ductwork.

SECURE OPERATION

If security is an issue, outdoor and indoor units are connected only by refrigerant piping and wiring to prevent intruders from crawling through the ductwork. In addition, since outdoor units can be installed close to an outside wall, coils are protected from vandals and severe weather.

FAST INSTALLATION

This compact ductless system is simple to install. A mounting bracket and duct work is needed for the indoor units, and only wire and piping need run between the indoor and outdoor units. These units are fast and easy to install ensuring minimal disruption to customers in the home or workplace. This makes the air handler systems the equipment of choice, especially in retrofit situations.

SIMPLE SERVICING AND MAINTENANCE

Removing the top panel on outdoor units provides immediate access to the control compartment, providing a service technician access to check unit operation. In addition, the draw-thru design of the outdoor section means that dirt accumulates on the outside surface of the coil. Coils can be cleaned quickly from the inside using a pressure hose and detergent.

On all indoor units, service and maintenance expense is reduced due to easy-to-use cleanable filters. In addition, these high wall systems have extensive self-diagnostics to assist in troubleshooting.

SAFE OPERATION

A Refrigerant Leak Detection System is available on select models. When the refrigerant sensor detects refrigerant leakage, the indoor unit will display a error code and emit a buzzing sound, the compressor of outdoor unit will immediately stop, and the indoor fan will start running.

BUILT-IN RELIABILITY

Ductless system indoor and outdoor units are designed to provide years of trouble-free operation.

The high wall indoor units include protection against freeze-up and high evaporator temperatures on heat pumps.

The condensing units on heat pumps are protected by a three minute time delay before the compressor starts the over-current protection and the high temperature protection.

INDIVIDUAL ROOM COMFORT

Maximum comfort is provided because each space can be controlled individually based on usage pattern. The air sweep feature provided permits optimal room air mixing to eliminate hot and cold spots for occupant comfort. In addition, year-round comfort can be provided with heat pumps.

ECONOMICAL OPERATION

The ductless system design allows individual room heating or cooling when required. There is no need to run large supply-air fans or chilled water pumps to handle a few spaces with unique load patterns. In addition, because air is moved only in the space required, no energy is wasted while air moves through the ducts.

EASY-TO-USE CONTROLS

The high wall units have microprocessor-based controls to provide the ultimate in comfort and efficiency. The user friendly wireless remote control provides the interface between the user and the unit.

ACCESSORIES

Customizing these ductless systems to your application is easily accomplished. Adding a condensate pump accessory to the high wall fan coil provides installation flexibility.

OPTIONAL WIRED CONTROLLER

AGENCY LISTINGS

All systems are listed with AHRI (Air Conditioning, Heating & Refrigeration Institute), and UL.

MODEL NUMBER NOMENCLATURE

INDOOR UNIT

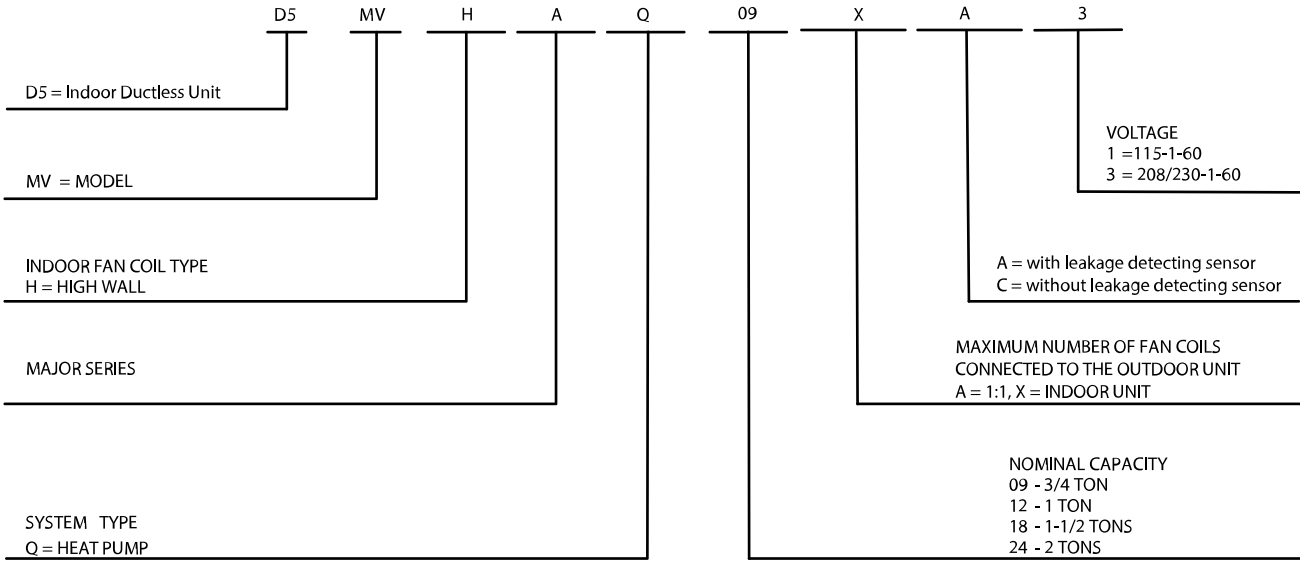

AHRI CERTIFIED™ www.ahridirectory.org

Use of the AHRI Certified TM Mark indicates a manufacturer's participation in the program For verification of certification for individual products, go to www.ahridirectory.org.

C UL US LISTED

SAFETY CONSIDERATIONS

Installing, starting up, and servicing air-conditioning equipment can be hazardous due to system pressures, electrical components, and equipment location (roofs, elevated structures, etc.).
Only trained, qualified installers and service mechanics should install, start- up, and service this equipment.

Untrained personnel can perform basic maintenance functions such as coil cleaning. All other operations should be performed by trained service personnel only.

When working on the equipment, observe the precautions in the literature and on tags, stickers, and labels attached to the equipment.

Follow all safety codes.Wear safety glasses and work gloves. Keep a quenching cloth and a fire extinguisher nearby when brazing. Use care in handling, rigging, and setting bulky equipment.
Read these instructions thoroughly and follow all warnings or cautions included in the literature and attached to the unit. Consult local building codes and National Electrical Code (NEC) for special requirements.
Recognize safety information.

This is the safety - alert symbol ⚠.

When you see this symbol on the unit and in instructions or manuals, be alert to the potential for personal injury. Understand these signal words: **DANGER**, **WARNING**, and **CAUTION**. These words are used with the safety- alert symbol.

DANGER identifies the most serious hazards which will result in severe personal injury or death.

WARNING signifies hazards which could result in personal injury or death.

CAUTION is used to identify unsafe practices which may result in minor personal injury or product and property damage.

NOTE is used to highlight suggestions which will result in enhanced installation, reliability, or operation.

⚠ WARNING

ELECTRICAL SHOCK HAZARD

Failure to follow this warning could result in personal injury or death.

Before installing, modifying, or servicing system, the main electrical disconnect switch must be in the OFF position. There may be more than one disconnect switch. Lock out and tag switch with a suitable warning label.

⚠ WARNING

EXPLOSION HAZARD

Failure to follow this warning could result in death, serious personal injury, and/or property damage.

Never use air or gases containing oxygen for leak testing or operating refrigerant compressors. Pressurized mixtures of air or gases containing oxygen can lead to an explosion.

⚠ CAUTION

EQUIPMENT DAMAGE HAZARD

Failure to follow this caution may result in equipment damage or improper operation.

Do not bury more than 36 in. (914 mm) of refrigerant pipe in the ground. If any section of pipe is buried, there must be a 6 in. (152 mm) vertical rise to the valve connections on the outdoor units. If more than the recommended length is buried, refrigerant may migrate to the cooler buried section during extended periods of system shutdown. This causes refrigerant slugging and could possibly damage the compressor at start-up.

⚠ WARNING

This appliance is not intended for use by persons (including children) with reduced physical, sensory or mental capabilities, or lack of experience and knowledge, unless they have been given supervision or instruction concerning use of the appliance by a person responsible for their safety. Children should be supervised to ensure that they do not play with the appliance.

⚠ WARNING

Only use the specified wire. If the wire is damaged, it must be replaced by the manufacturer, its service agent or similarly qualified persons in order to avoid a hazard. The product must be properly grounded at the time of installation, or electric shock may occur.
For all electrical work, follow all local and national wiring standards, regulations, and the Installation Manual. Connect the cables tightly, and clamp them securely to prevent external forces from damaging the terminal. Improper electrical connections can overheat and cause fire, and may also cause shock. All electrical connections must be made according to the Electrical Connection Diagram located on the panels of the indoor and outdoor units.
All wiring must be properly arranged to ensure that the control board cover can close properly. If the control board cover is not closed properly, it can lead to corrosion and cause the connection points on the terminal to heat up, catch fire, or cause electrical shock.Disconnection must be incorporated in the fixed wiring in accordance with NEC, CSA and Local Codes. Do not share the electrical outlet with other appliances. Improper or insufficient power supply can cause fire or electric shock.
If connecting power to fixed wiring, an all-pole disconnection device which has at least 3mm clearances in all poles, and have a leakage current that may exceed 10mA, the residual current device (RCD) having a rated residual operating current not exceeding 30mA, and disconnection must be incorporated in the fixed wiring in accordance with NEC, CSA and Local Codes.

⚠ WARNING

Turn off the air conditioner and disconnect the power before performing any installation or repairing. Failure to do so can cause electric shock.

Installation must be performed by an authorized dealer or specialist. Defective installation can cause water leakage, electrical shock, or fire. Installation must be performed according to the installation instructions.

Improper installation can cause water leakage, electrical shock, or fire. Contact an authorized service technician for repair or maintenance of this unit. This appliance shall be installed in accordance with national wiring regulations.

Only use the included accessories, parts, and specified parts for installation. Using non-standard parts can cause water leakage, electrical shock, fire, and can cause the unit to fail.

Install the unit in a firm location that can support the unit's weight. If the chosen location cannot support the unit's weight, or the installation is not done properly, the unit may drop and cause serious injury and damage. Install drainage piping according to the instructions in this manual. Improper drainage may cause water damage to your home and property. For units that have an auxiliary electric heater, do not install the unit within 3 feet (1 meter) of any combustible materials.

If combustible gas accumulates around the unit, it may cause fire.

Do not turn on the power until all work has been completed.

When moving or relocating the air conditioner, consult experienced service technicians for disconnection and re-installation of the unit.

Read the information for details in "indoor unit installation" and "outdoor unit installation" sections.

NOTE: The air conditioner's circuit board (PCB) is designed with a fuse to provide over-current protection. The specifications of the fuse are printed on the circuit board, for example: T3.15AL/250VAC, T5AL/250VAC, T3.15A/250VAC, T5A/250VAC, T20A/250VAC, T30A/250VAC,etc.

NOTE: Only a blast-proof ceramic fuse can be used.

⚠ WARNING

PERSONAL INJURY AND PROPERTY DAMAGE HAZARD

For continued performance, reliability, and safety, the only approved accessories and replacement parts are those specified by the equipment manufacturer. The use of non-manufacturer approved parts and accessories could invalidate the equipment limited warranty and result in a fire risk, equipment malfunction, and failure.

Please review the manufacturer's instructions and replacement parts catalogs available from your equipment supplier.

Table 1 – Symbols Displayed on the Indoor Unit or Outdoor Unit

A2L	WARNING	This symbol shows that this appliance used a flammable refrigerant. If the refrigerant is leaked and exposed to an external ignition source, there is a risk of fire.
	CAUTION	This symbol shows that the operation manual should be read carefully.
	CAUTION	This symbol shows that a service personnel should be handling this equipment with reference to the installation manual.
	CAUTION	
	CAUTION	This symbol shows that information is available such as the operating manual or installation manual.

⚠ WARNING

FOR FLAMMABLE REFRIGERANTS

Do not use means to accelerate the defrosting process or to clean, other than those recommended by the manufacturer.

The appliance shall be stored in a room without continuously operating ignition sources (for example: open flames, an operating gas appliance or an operating electric heater).

Do not pierce or burn. Be aware that refrigerants may not contain an odor.

R-454B Refrigerant Safety Group A2L **R-454B**

WARNING – Risk of Fire due to Flammable Refrigerant Used. Follow Handling Instructions Carefully in Compliance with National Regulations

NOTE: Risk of Fire. Flammable refrigerant used. To be repaired only by trained service personnel. Do not puncture refrigerant tubing.

STANDARD FEATURES AND ACCESSORIES

Ease Of Installation	
Mounting Brackets	S
Low Voltage Controls	S
Comfort Features	
Microprocessor Controls	S
Wired Remote Controller	A
Wireless Remote Controller	S
Automatic Up-Down Airflow Louver Swing	S
Air Direction Control	S
Auto Restart Function	S
Cold Blow Protection on Heat Pumps	S
Freeze Protection Mode on Heat Pumps	S
Boost Mode	S
Auto Changeover on Heat Pumps	S
Follow Me	S
Auto Restart	S
Refrigerant Leakage Detection (only on selected models)	S
Energy Saving Features	
Sleep Mode	S
Stop/Start Timer	S
46°F Heating Mode (Heating Setback)	S
Safety And Reliability	
Indoor Coil Freeze Protection	S
Indoor Coil High Temp Protection in Heating Mode	S
Ease Of Service And Maintenance	
Cleanable Filters	S
Diagnostics	S

Legend

S - Standard
A - Accessory

ACCESSORIES

ACCESSORY NO.	DESCRIPTION	FOR MODELS
KSACN1201AAA	WIRED REMOTE CONTROL	All Sizes

Manufacturer reserves the right to change, at any time, specifications and designs without notice and without obligations.

DIMENSIONS

HIGH WALL UNIT SIZE		9K	12K	9K	12K	18K	24K
Voltage		(115V)		(208/230V)			
Height	In. (mm)	11.22 (285)	11.22 (285)	11.22 (285)	11.22 (285)	11.89 (302)	12.87 (327)
Width	In. (mm)	28.15 (715)	31.69 (805)	31.69 (805)	31.69 (805)	37.68 (957)	40.94 (1040)
Depth	In. (mm)	7.64 (194)	7.64 (194)	7.64 (194)	7.64 (194)	8.39 (213)	8.66 (220)
Weight-Net (Heat Pump)	Lbs (kg)	15.87 (7.2)	17.64 (8)	17.42 (7.9)	17.42 (7.9)	23.37 (10.6)	29.1 (13.2)

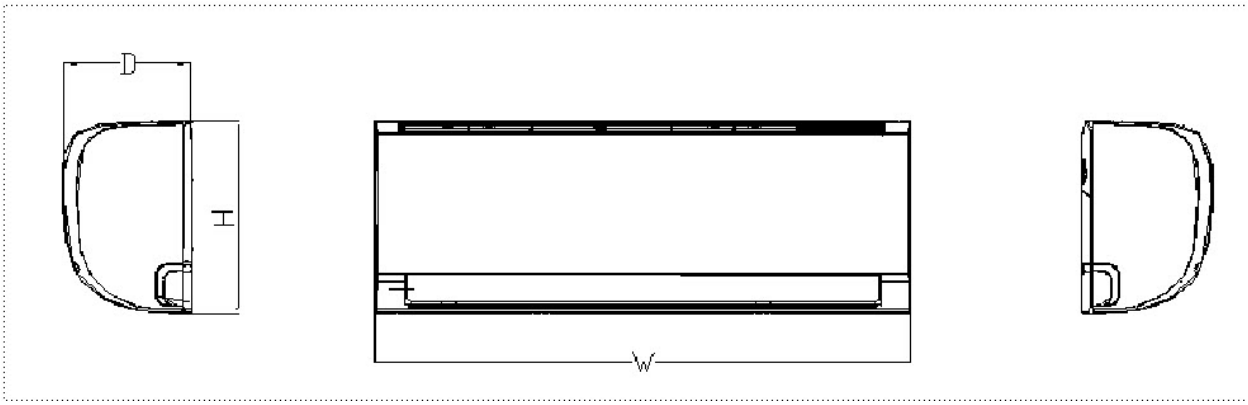

Fig. 3 – Dimensions

CLEARANCES

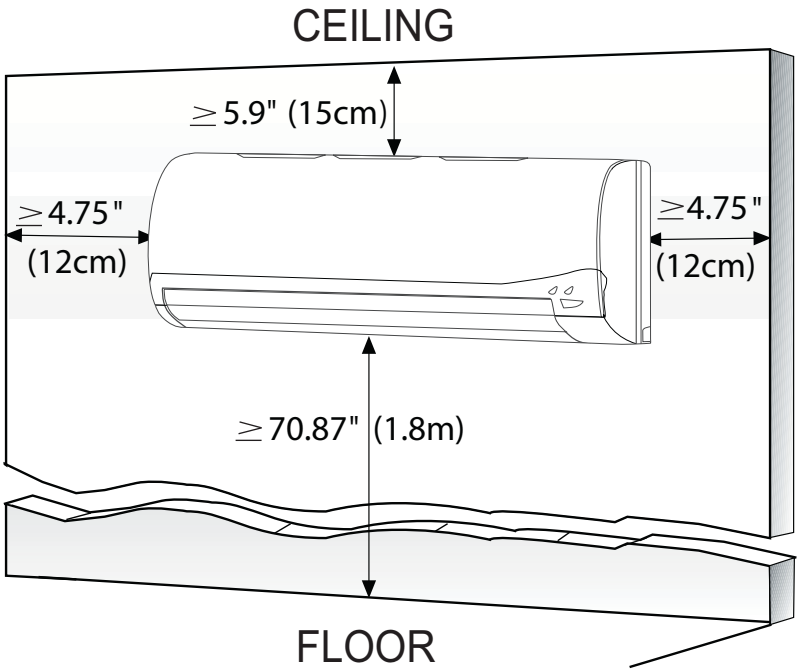

Fig. 4 – Indoor Unit Clearances

SPECIFICATIONS

INDOOR UNIT MODEL			D5MVHAQ09XC1	D5MVHAQ12XC1	D5MVHAQ09XC3	D5MVHAQ12XC3	D5MVHAQ18XC3	D5MVHAQ24XC3
Power supply		V; Ph; Hz	115V; 1Ph; 60HZ		208/230V; 1Ph; 60HZ			
	Material	-	Acrylontrile Styrene +30%G					
	Type	-	GL-94*516-I	GL-94*605-N	GL-94*605-N	GL-94*605-N	GL-98*758-I	GL-107.5*780-IN
	Diameter	inch	3.7	3.7	3.7	3.7	3.9	4.2
		mm	94	94	94	94	98	108
	Height	inch	20.3	23.8	23.8	23.8	29.8	30.7
		mm	516	605	605	605	758	780
INDOOR MOTOR SPECIFICATIONS	Model	-	YKFG-15-4-28-1		YKFG-20-4-10L		YKFG-28-4-6-5	YKFG-45-4-13
	Type	-	AC					
	Input	W	46	46	47.4	47.4	58.5	89
	Max. Input	W	46.0	46.0	47.4	47.4	58.5	89.0
	Output	W	15	15	20	20	28	45
	FLA	A	0.6	0.65	0.45	0.45	0.6	0.81
	Rated HP	HP	0.02	0.02	0.03	0.03	0.04	0.06
	Range of Current	Amps	0.45 ±10%	0.45 ±10%	0.218 ±10%	0.218 ±10%	0.267 ±10%	0.4 ±10%
	Rated Current	Amps	0.450	0.450	0.218	0.218	0.267	0.40
	Speed	rev/min	1170 / 962 / 858	1180 / 968 / 862	1180 / 968 / 862	1180 / 968 / 862	1200 / 1000 / 900	1200 / 1000 / 910
	Rated RPM	rev/min	1170	1180	1180	1180	1200	1200
	Insulation Class	-	E	E	E	E	E	B
	Safe Class	-	IPX0	IPX0	IPX0	IPX0	IPX0	IPX0
INDOOR REFRIGERANT COIL SPECIFICATIONS	Number of Rows	Rows	2	2	2	2	2	2
	Tube Outside Diameter	inch	0.197	0.197	0.197	0.197	0.276	0.276
		mm	Φ5	Φ5	Φ5	Φ5	Φ7	Φ7
	Nominal Tube Wall	Inch (mm)	0.00945 (0.24)	0.00945 (0.24)	0.00945 (0.24)	0.00945 (0.24)	0.00945 (0.24)	0.00945 (0.24)
	Tube Enhancement	(Yes/No)	Yes	Yes	Yes	Yes	Yes	Yes
	Tube Material		Copper	Copper	Copper	Copper	Copper	Copper
	Tube Pitch (a) x Row Pitch (b)	inch	0.77 x 0.46	0.77 x 0.46	0.77 x 0.46	0.77 x 0.46	0.83 x 0.53	0.83 x 0.53
		mm	19.5 x 11.6	19.5 x 11.6	19.5 x 11.6	19.5 x 11.6	21 x 13.37	21 x 13.37
	Fin Spacing	FPI	22	22	22	22	22	20
		mm	1.2	1.2	1.2	1.2	1.2	1.3
	Fin Type		Louvered	Louvered	Louvered	Louvered	Louvered	Louvered
	Fin Material		Gold hydrophilic aluminum					
	Coil Length x Height x Width	inch	20.08x3.07x0.91+20.08x3.84x0.91+20.08x3.07x0.91	23.43x3.07x0.91+23.43x4.61x0.91+23.43x3.07x0.91	23.43x3.07x0.91+23.43x4.61x0.91+23.43x3.07x0.91	23.43x3.07x0.91+23.43x4.61x0.91+23.43x3.07x0.91	29.53x11.57x1.05	30.71x8.27x1.05+30.71x4.13x1.05
		mm	510x78x23.2+510x97.5x23.2+510x78x23.2	595x78x23.2+595x117x23.2+595x78x23.2	595x78x23.2+595x117x23.2+595x78x23.2	595x78x23.2+595x117x23.2+595x78x23.2	750x294x26.74	780x210x26.74+780x105x26.74
	Face Area	ft2	1.39	1.75	1.75	1.75	2.37	2.64
	Number of Circuits	#	3	4	4	4	4	4
SOUND DATA	Indoor Sound Pressure Level (Hi/Med/Lo/Silent)	dB(A)	40.5 / 34.5 / 27 / 19	42 / 35 / 27 / 19	41.5 / 34.5 / 26.5 / 19	41.5 / 34.5 / 26.5 / 19	44 / 37.5 / 30 / 19	46 / 41 / 31 / 27
CFM DATA	Indoor air flow data(Hi/Med/Lo)	CFM	264.9 / 211.9 / 158.9	311.9 / 241.3 / 176.6	294.3 / 241.3 / 176.6	294.3 / 241.3 / 176.6	477.3 / 359 / 264.9	518 / 477.3 / 341.4
MOISTURE REMOVAL	Dehumidifying Volume	L/h	1.1	1.6	1.2	1.7	2.2	3.2
AIR THROW DATA	Max. Approximate Air Throw Data	ft (m)	18.31 (5.58)	20.08 (6.12)	20.08 (6.12)	20.08 (6.12)	20.67 (6.3)	23.92 (7.29)

Manufacturer reserves the right to change, at any time, specifications and designs without notice and without obligations.

			D5MVHAQ09XC1	D5MVHAQ12XC1	D5MVHAQ09XC3	D5MVHAQ12XC3	D5MVHAQ18XC3	D5MVHAQ24XC3
ENVIRONMENTAL SPECIFICATIONS	Indoor Cooling Operating Range Min - Max DB	°F	60~90	60~90	60~90	60~90	60~90	60~90
		(°C)	(16~32)	(16~32)	(16~32)	(16~32)	(16~32)	(16~32)
	Indoor Cooling Operating Range Min - Max WB	°F	59-84	59-84	59-84	59-84	59-84	59-84
		(°C)	(15-29)	(15-29)	(15-29)	(15-29)	(15-29)	(15-29)
	Outdoor Cooling Operating Range Min - Max DB	°F	5~122	5~122	5~122	5~122	5~122	5~122
		(°C)	(-15~50)	(-15~50)	(-15~50)	(-15~50)	(-15~50)	(-15~50)
	Indoor Heating Operating Range Min - Max DB	°F	32~86	32~86	32~86	32~86	32~86	32~86
		(°C)	(0~30)	(0~30)	(0~30)	(0~30)	(0~30)	(0~30)
	Outdoor Heating Operating Range Min - Max DB	°F	5~75	5~75	5~75	5~75	5~75	5~75
		(°C)	(-15~24)	(-15~24)	(-15~24)	(-15~24)	(-15~24)	(-15~24)
	Non-Operating Environment Storage Temperature Range (DB)	°F	-49-140	-49-140	-49-140	-49-140	-49-140	-49-140
		(°C)	(-45-60)	(-45-60)	(-45-60)	(-45-60)	(-45-60)	(-45-60)
	Operation Humidity	%	0-80 %	0-80 %	0-80 %	0-80 %	0-80 %	0-80 %
	Ambient Humidity	%	0-80 %	0-80 %	0-80 %	0-80 %	0-80 %	0-80 %

COMPATIBILITY

INDOOR UNIT		HEAT PUMP OUTDOOR UNIT					
		37MVRAQ09AA1	37MVRAQ09AA3	37MVRAQ12AA1	37MVRAQ12AA3	37MVRAQ18AA3	37MVRAQ24AA3
Value Tier High Wall	D5MVHAQ09XA1	●					
	D5MVHAQ09XC1	●					
	D5MVHAQ09XA3		●				
	D5MVHAQ09XC3		●				
	D5MVHAQ12XA1			●			
	D5MVHAQ12XC1			●			
	D5MVHAQ12XA3				●		
	D5MVHAQ12X3C				●		
	D5MVHAQ18XA3					●	
	D5MVHAQ18XC3					●	
	D5MVHAQ24XA3						●
	D5MVHAQ24XC3						●

INDOOR UNIT		HEAT PUMP OUTDOOR UNIT			
		37MTRAQ18CA3	37MTRAQ27DA3	37MTRAQ36EA3	37MTRAQ48FA3
Value Tier High Wall (Sensor Included)	D5MVHAQ09XA3	●	●	●	●
	D5MVHAQ12XA3	●	●	●	●
	D5MVHAQ18XA3	●	●	●	●
	D5MVHAQ24XA3		●	●	●

Manufacturer reserves the right to change, at any time, specifications and designs without notice and without obligations.

AIR FLOW DATA

For complete data, see “SPECIFICATIONS” on page 7.

MOISTURE REMOVAL

For complete data, see “SPECIFICATIONS” on page 7.

SOUND PRESSURE

For complete data, see “SPECIFICATIONS” on page 7.

APPLICATION DATA

UNIT SELECTION

Select equipment that either matches or is supports slightly more than the anticipated peak load. This provides better humidity control, fewer unit cycles, and less part-load operation.

For units used in spaces with high sensible loads, base equipment selection on unit sensible load, not on total anticipated load. Adjust for anticipated room wet bulb temperature to avoid undersizing the equipment.

UNIT MOUNTING (INDOOR)

Refer to the unit’s installation instructions for further details.

Unit leveling - For reliable operation, units should be level in all planes.

Clearance - Provide adequate clearance for airflow (see Fig. 4).

Unit location - Select a location which provides the best air circulation for the room. These units should be positioned as high as possible on the wall for the best air circulation. The unit return and discharge should not be obstructed by furniture, curtains, or anything which may cause unit short cycling or air recirculation.

Place the unit in the middle of the selected wall (if possible). Use an outside wall, if available, to make piping easier, and place the unit so it faces the normal location of room occupants.

UNIT MOUNTING (OUTDOOR)

Refer to the unit’s installation instructions for further details.

Do not install the indoor or outdoor units in a location with special environmental conditions. For those applications, contact your Ductless representative.

MOUNTING TEMPLATE

Refer to the unit’s installation instructions for further details.

The fan coil units are furnished with mounting to mark the location of the wiring, and the refrigeration line hole locations.

CONTROL SYSTEM

The indoor unit is equipped with a microprocessor control to perform two functions:

1. Provide safety for the system
2. Control the system and provide optimum levels of comfort and efficiency.

The main microprocessor is located on the control board of the fan coil unit (outdoor units also have a microprocessor) with thermistors located in the fan coil air inlet and on the indoor coil.

The heat pump units have a thermistor on the outdoor coil. These thermistors monitor the system operation to maintain the unit within acceptable parameters and controls the operating mode.

Wireless Remote Control

Fig. 5 – Wireless Remote Control

1. A wireless remote control is supplied for system operation of all high wall units.
2. Each battery operated wireless (infrared) remote control may be used to control more than one unit.

WIRED REMOTE CONTROL (OPTIONAL)

P/N KSACN1201AAA

1. Optional wired remote controller used for system operation of all high wall units.
2. Kit includes a wired remote controller and a connecting cable.
3. Connect with wire terminal between remote controller and indoor unit.

Display in °F or °C and temperature increments every 1°F or every 1°C.

SUPPORT

Adequate support must be provided to support the weight of all the fan coils. Refer to (SPECIFICATIONS on p7) for fan coil weights, along with dimensional drawings for the mounting bracket locations.

SYSTEM OPERATING CONDITIONS

Table 2 – Temperature Operating Range

OPERATING RANGE MIN/MAX °F/°C		
	COOLING	HEATING
Indoor DB	60 / 90 (16 / 32)	32 / 86 (0 / 30)

NOTE: Reference the product installation instructions for more information.

DRAIN CONNECTIONS

Install drains to meet the local sanitation codes. If adequate gravity drainage cannot be provided, the unit should be equipped with an accessory condensate pump.

Field drain pipe O.D. is 0.625 in (16 mm) for all sizes.

NOTE: High wall fan coil units have internal condensate traps. A trap is not required.

Drain connections may be routed through alternate locations on most fan coils (Fig. 6).

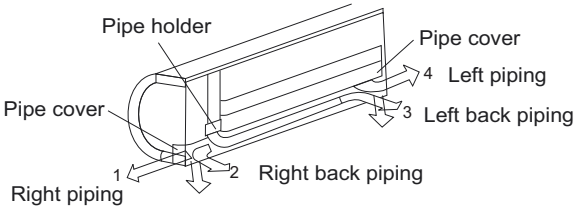

Fig. 6 – Piping Connections

WIRING

All wires must be sized per NEC (National Electrical Code) or CEC (Canadian Electrical Code) and local codes. Use Electrical Data table MCA (minimum circuit amps) and MOP (maximum overcurrent protection) to correctly size the wires and the disconnect fuse or breakers respectively. Per the caution note, only stranded copper conductors with a 600 volt rating and double insulated copper wire must be used.

The use of BX cable is not recommended.

Recommended Connection Method for Power and Communication Wiring - Power and Communication Wiring:

The main power is supplied to the outdoor unit. The field supplied 14/3 power/communication wiring from the outdoor unit to indoor unit consists of four (4) wires and provides the power for the indoor unit. Two wires are high voltage AC power, one is communication wiring and the other is a ground wire.

⚠ CAUTION

EQUIPMENT DAMAGE HAZARD

Failure to follow this caution may result in equipment damage or improper operation.

Wires should be sized based on NEC and local codes.

Use copper conductors only with a 600 volt rating and double insulated copper wire.

⚠ CAUTION

EQUIPMENT DAMAGE HAZARD

Failure to follow this caution may result in equipment damage or improper operation.

Be sure to comply with local codes while running wire from the indoor unit to the outdoor unit.

Every wire must be connected firmly. Loose wiring may cause the terminal to overheat or result in unit malfunction. A fire hazard may also exist. Ensure all wiring is tightly connected.

No wire should touch the refrigerant tubing, compressor or any moving parts.

Disconnecting means must be provided and shall be located within sight and readily accessible from the air conditioner.

Connecting cable with conduit shall be routed through the hole in the conduit panel.

WIRING DIAGRAMS

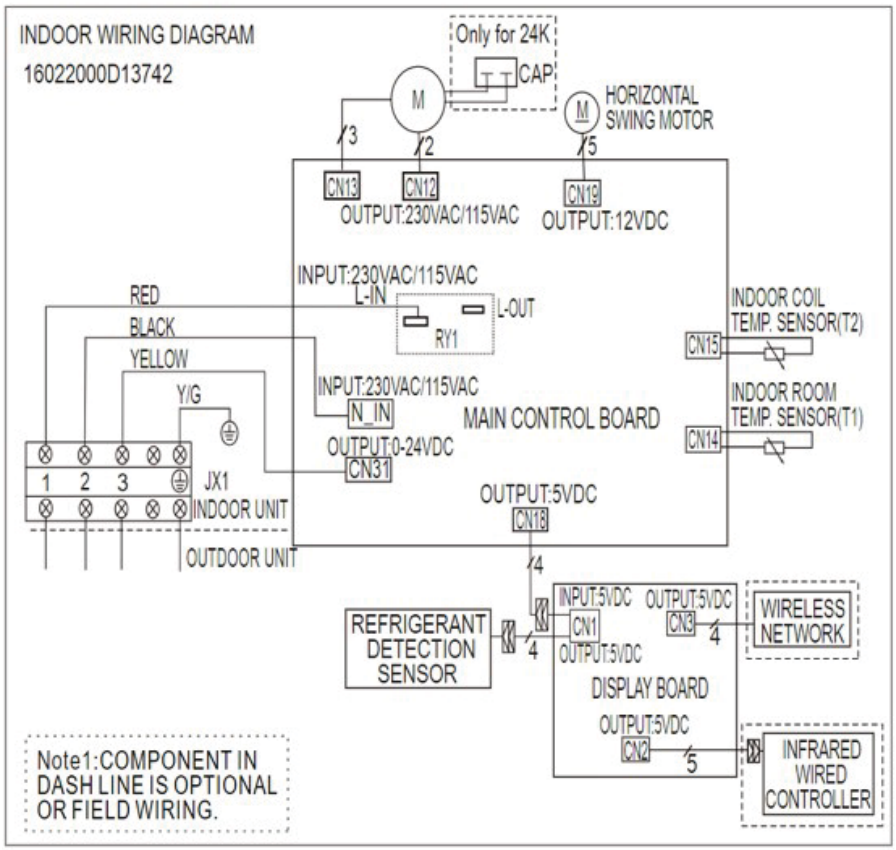

Fig. 7 – Sizes 09 – 24K, with Refrigerant Detection Sensor

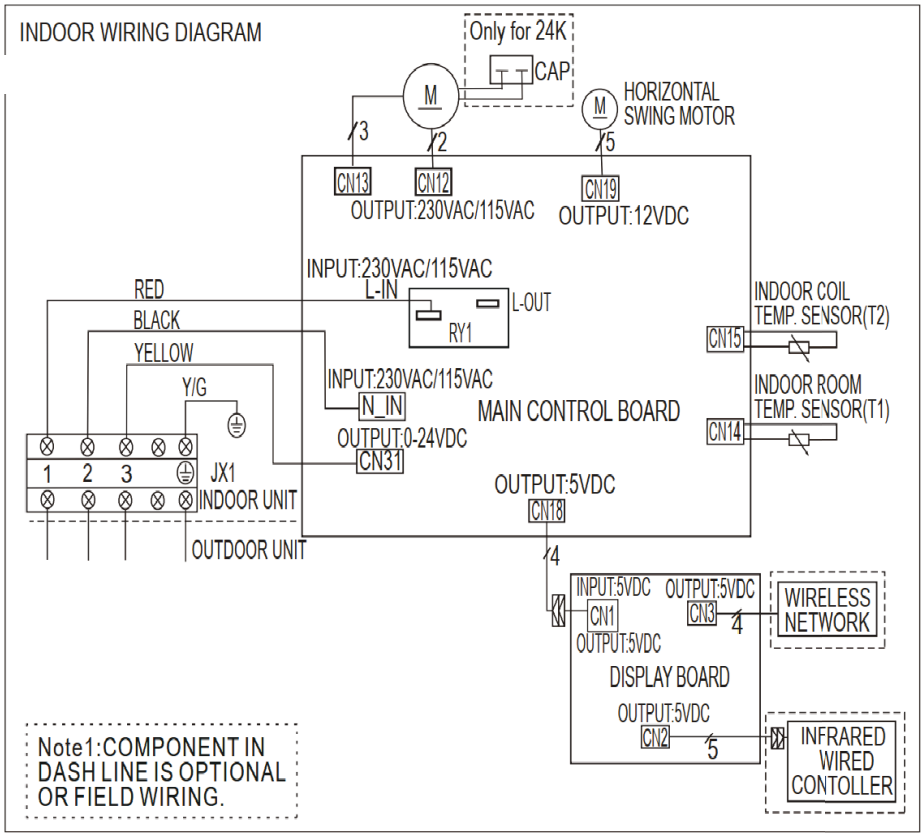

Fig. 8 – Sizes 09 – 24K, without Refrigerant Detection Sensor

GUIDE SPECIFICATIONS
HIGH WALL DUCTLESS SYSTEM

Size Range: 3/4 to 2 Ton Nominal Cooling and Heating Capacity

Model Number: **D5MVHA**

Part 1 - GENERAL

1.01 System Description

Indoor, wall-mounted, direct-expansion fan coils are matched with the heat pump outdoor unit.

1.02 Agency Listings

Unit is rated per AHRI Standards 210/240 and listed in the AHRI directory as a matched system.

1.03 Delivery, Storage, And Handling

Units are stored and handled per the unit manufacturer's recommendations.

1.04 Warranty (For Inclusion By Specifying Engineer)

Part 2 - PRODUCTS

2.01 Equipment

A. General:

Indoor, direct-expansion, wall-mounted fan coil. The unit is complete with a cooling/heating coil, fan, fan motor, piping connectors, electrical controls, microprocessor control system, and integral temperature sensing. The unit is furnished with an integral wall mounting bracket and mounting hardware.

B. Unit Cabinet:

The cabinet discharge and inlet grilles are attractively styled, high-impact polystyrene. The cabinet is fully insulated for improved thermal and acoustic performance.

C. Fans:

1. Fan is the tangential direct-drive blower type with air intake at the top of the unit and discharge at the bottom front. An automatic, motor-driven vertical air sweep is provided as standard equipment.
2. The air sweep operation is user selectable. The vertical sweep may be adjusted (using the remote control). The horizontal air direction may be set manually.

D. Coil:

The coil is a copper tube with aluminum fins and galvanized steel tube sheets. The fins are bonded to the tubes by mechanical expansion and blue hydrophilic pre-coated. A drip pan, under the coil, has a drain connection for the hose attachment to remove condensate. The condensate pan has an internal trap.

E. Motors:

The motors are open drip-proof, with a permanently lubricated ball bearing. The fan motors are 3-speed.

F. Controls:

The controls consist of a microprocessor-based control system which controls the space temperature, determines the optimum fan speed, and runs self diagnostics. The temperature control range is from 62°F to 86°F (17°C to 30°C) in increments of 1°F or 1°C, and have 46°F Heating Mode (Heating Setback). The wireless remote controller has the ability to act as the temperature sensing location for room comfort.

The unit has the following functions (at a minimum):

1. An automatic restart after a power failure at the same operating conditions as at the failure.
2. A timer function to provide a minimum 24-hour timer cycle for system Auto Start/Stop.
3. Temperature-sensing controls respond to return air temperature.
4. Indoor coil freeze protection.
5. Wireless infrared remote control to enter set points and operating conditions.
6. Automatic air sweep control to provide on or off activation of air sweep louvers.
7. Dehumidification mode provides increased latent removal capability by modulating the system operation and the set point temperature.
8. Fan-only operation to provide room air circulation when no cooling is required.
9. Diagnostics provide continuous checks of unit operation and warn of possible malfunctions. Error messages appear on the unit.
10. Fan speed control is user-selectable: turbo, high, medium, low, or microprocessor controlled automatic operation during all operating modes.
11. Automatic heating-to-cooling changeover in the heat pump mode. The control includes a deadband to prevent rapid mode cycling between heating and cooling.
12. Indoor coil high temperature protection are provided to detect excessive indoor discharge temperature when the unit is in the heat pump mode.

G. Filters:

Unit has a filter track with factory-supplied cleanable filters.

H. Electrical Requirements:

Indoor fan motor to operate on 115V on model sizes 09-12 and on 208-230V on model sizes 09-24, as specified. Power is supplied by the outdoor unit.

I. Refrigerant Lines:

All units should have refrigerant lines that can be oriented to connect from the left, right or back of unit. Both refrigerant lines need to be insulated.

J. Special Features (Field Installed):

Refrigerant Leak Detection System (select units only)

When the refrigerant sensor detects refrigerant leakage, the indoor unit will display a error code and emit a buzzing sound, the compressor of outdoor unit will immediately stop, and the indoor fan will start running.

© 2026 Carrier. All rights reserved.

Manufacturer reserves the right to change, at any time, specifications and designs without notice and without obligations.