PG96MSA

Up to 97% AFUE, Single-Stage, Multi 18-Speed ECM, Condensing Gas Furnace

Product Data

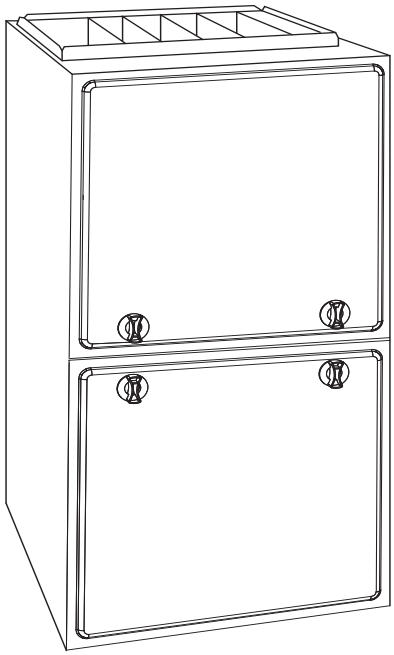

A11300

Representative drawing only. Some product models may vary.

WARNING

CARBON MONOXIDE POISONING AND FIRE HAZARD

Failure to follow this warning could result in personal injury, death, and/or property damage.

This furnace is not designed for use in recreation vehicles or outdoors. This furnace is designed for use in manufactured (Mobile) homes when an optional Mobile Home accessory kit is installed.

Failure to follow this warning could result in personal injury, death, and/or property damage.

The PG96MSA Multipoise Condensing Gas Furnace features a single-stage gas valve and a fixed-speeds, constant torque (MCT) ECM blower motor. With an Annual Fuel Utilization Efficiency (AFUE) of up to 97.0% AFUE, this furnace provides added savings over standard gas furnaces. Improved serviceability with the 3 digit status display and NFC enabled board allowing setup via the service tech app. It features 4-way multipoise installation flexibility, and is available in ten model sizes. All sizes except the 26,000 BTUh model can be vented for direct vent/two-pipe, ventilated combustion air, or single-pipe applications. The 26,000 BTUh model can use the same 2-pipe venting system using outside air for combustion, but is not considered direct-vent. All sizes are design certified in Canada, and select sizes are certified for mobile/manufactured home use with conversion kit accessory.

PERFORMANCE

- Multi 18-speed, constant torque (MCT) ECM blower motor for electrically efficient operation all year long in heating, cooling and continuous fan operation.
- Enhanced diagnostics with easy to read 3-digit display for faults and status.
- Single-speed inducer motor, and single-stage gas valve.
- Silicon Nitride Hot Surface Igniter.
- Dual fuel capable with a compatible heat pump and thermostat for energy-saving heating performance
- Adjustable blower speed for heating and cooling.
- Aluminized-steel primary heat exchanger.
- Stainless-steel condensing secondary heat exchanger.

INSTALLATION FLEXIBILITY

- On-board NFC antenna makes setup a tap away when using the service technician app.
- 4-way multipoise design for upflow, downflow or horizontal installation, with unique vent elbow for optional venting through-the-cabinet downflow venting capability.
- Factory-configured ready for upflow applications.
- Ideal height 35” (889 mm) cabinet: short enough for taller coils, but still allows enough room for service.
- Two-pipe venting, single-pipe venting or ventilated combustion air.

APPLICATIONS

- Approved for Twinning applications with manufacturer’s approved accessory kit.
- Approved for Manufactured Housing/Mobile Home applications with MH accessory kit.
- Convertible to propane with gas conversion accessory kit.

CERTIFICATIONS

- All sizes meet ENERGY STAR® Version 4.1 criteria for gas furnaces: 95%+ AFUE.
- Cabinet air leakage less than 2.0% at 1.0 in. w.c. and cabinet air leakage less than 1.4% at 0.5 in. w.c. when tested in accordance with ASHRAE standard 193.
- All sizes can be installed in air quality management districts with a 40 ng/J NOx emissions requirements.

LIMITED WARRANTY*

- 20-year heat exchanger limited warranty
- 5-year parts limited warranty
- 10-year parts limited warranty with timely registration

* Applies to original purchaser/homeowner; some limitations may apply. For residential applications only. See warranty certificate for complete details and restrictions, including warranty coverage of other applications.

A200352

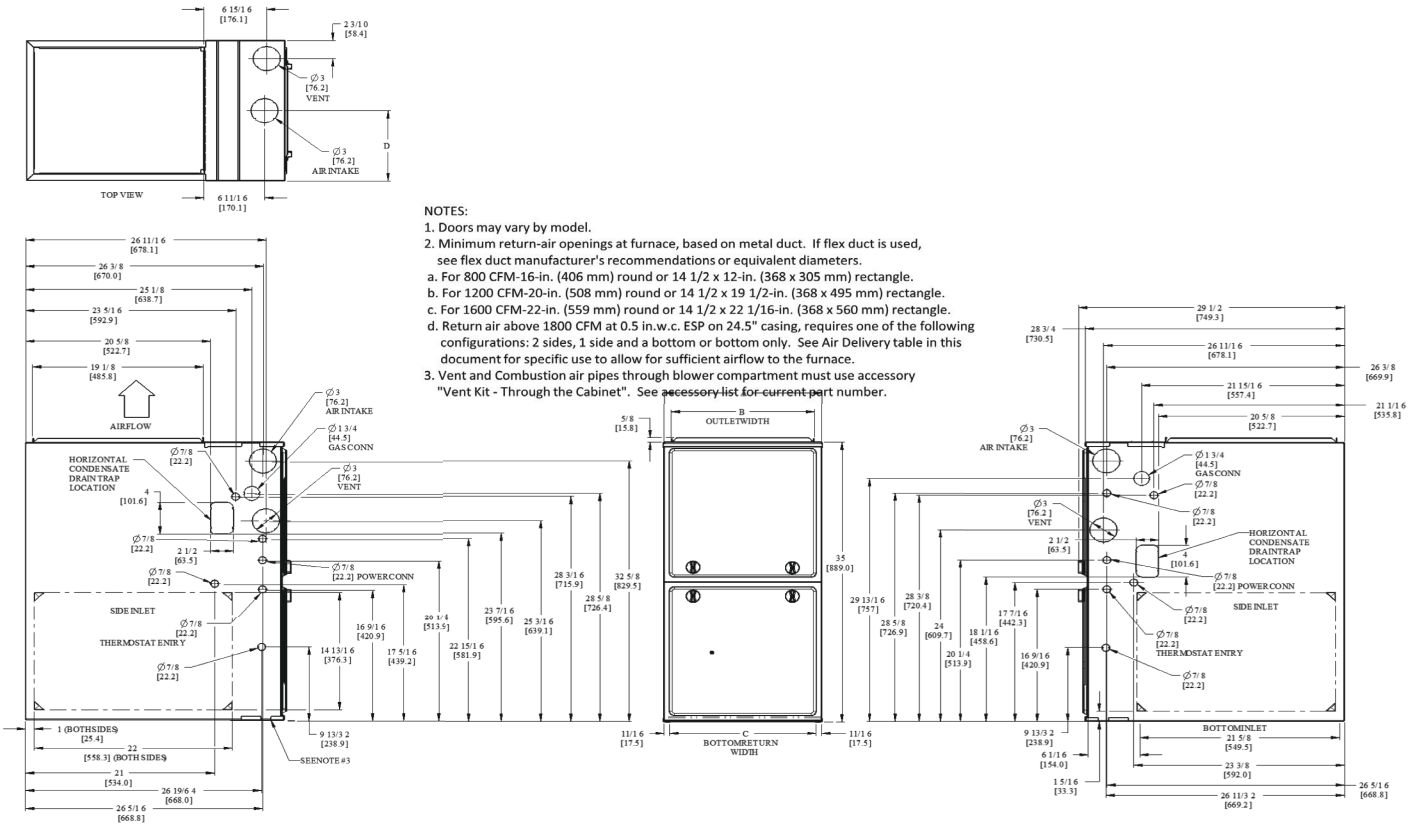

NOTES:
1. Doors may vary by model.
2. Minimum return-air openings at furnace, based on metal duct. If flex duct is used, see flex duct manufacturer's recommendations or equivalent diameters.
   a. For 800 CFM-16-in. (406 mm) round or 14 1/2 x 12-in. (368 x 305 mm) rectangle.
   b. For 1200 CFM-20-in. (508 mm) round or 14 1/2 x 19 1/2-in. (368 x 495 mm) rectangle.
   c. For 1600 CFM-22-in. (559 mm) round or 14 1/2 x 22 1/16-in. (368 x 560 mm) rectangle.
   d. Return air above 1800 CFM at 0.5 in.w.c. ESP on 24.5" casing, requires one of the following configurations: 2 sides, 1 side and a bottom or bottom only. See Air Delivery table in this document for specific use to allow for sufficient airflow to the furnace.
3. Vent and Combustion air pipes through blower compartment must use accessory "Vent Kit - Through the Cabinet". See ~~accessory list for current~~ part number.

NOTE: ALL DIMENSIONS IN INCH (MM)

SD5603-4 REV. -

A210796

Dimensional Drawing

Dimensions

FURNACE SIZE	A	B	C	D	SHIP WT. LB (KG)
	CABINET WIDTH	OUTLET WIDTH	BOTTOM INLET WIDTH	AIR INTAKE	
30026A	14-3/16 (361)	12-1/2 (319)	12-9/16 (322)	7-1/8 (181)	119 (54)
30040A	14-3/16 (361)	12-1/2 (319)	12-9/16 (322)	7-1/8 (181)	123 (56)
36040B	17-1/2 (445)	15-7/8 (403)	16 (406)	8-3/4 (222)	130 (59)
36060A	14-3/16 (361)	12-1/2 (319)	12-9/16 (322)	7-1/8 (181)	129 (59)
48060B	17-1/2 (445)	15-7/8 (403)	16 (406)	8-3/4 (222)	142 (64)
48080B	17-1/2 (445)	15-7/8 (403)	16 (406)	8-3/4 (222)	150 (68)
60080C	21 (533)	19-3/8 (492)	19-1/2 (495)	10-1/2 (267)	158 (72)
60100C	21 (533)	19-3/8 (492)	19-1/2 (495)	10-1/2 (267)	167 (76)
66120D	24-1/2 (622)	22-7/8 (581)	23 (584)	12-1/4 (311)	181 (82)
66140D	24-1/2 (622)	22-7/8 (581)	23 (584)	12-1/4 (311)	189 (86)

MODEL NUMBER NOMENCLATURE

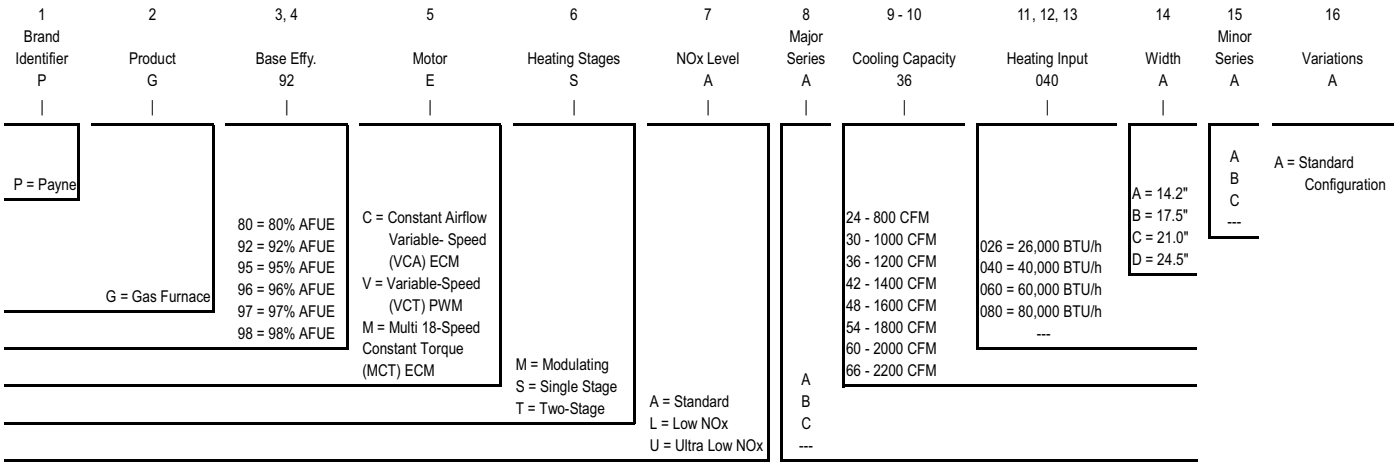

A220583

FURNACE COMPONENTS

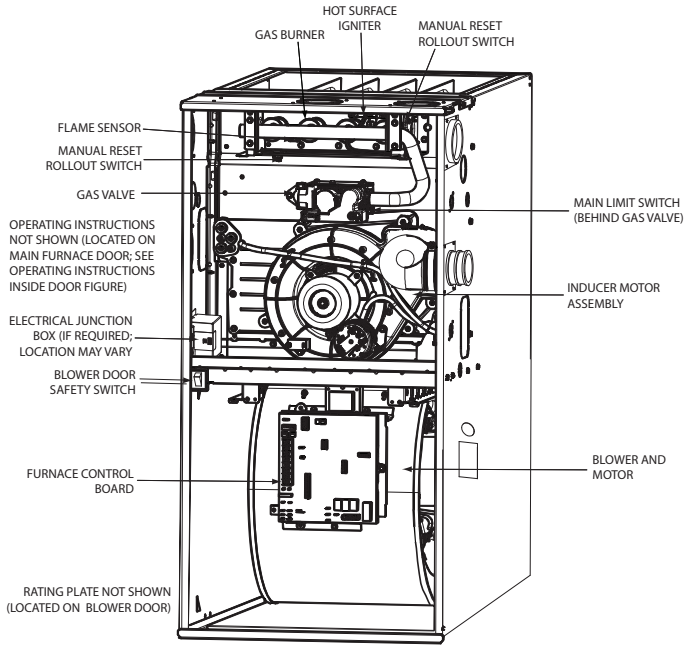

A190145

For California Residents:

If installed with a manufactured (mobile) home conversion kit in SCAQMD: This furnace does not meet the SCAQMD Rule 1111 14 ng/J NOx emission limit, and thus is subject to a mitigation fee of up to $450. This furnace is not eligible for the Clean Air Furnace Rebate Program: www.CleanAirFurnaceRebate.com

MINIMUM CLEARANCES TO COMBUSTIBLE MATERIALS

POSITION	CLEARANCE
REAR	0
FRONT (Combustion air openings in furnace and in structure)	1 in. (25 mm)
Required for service	*24 in. (610 mm)
All Sides of Supply Plenum	*1 in. (25 mm)
Sides	0
Vent	0
Top of Furnace	1 in. (25 mm)

*. Consult local building codes

The furnace should be sized to provide 100 percent of the design heating load requirement plus any margin that occurs because of furnace model size capacity increments. None of the furnace model sizes can be used if the heating load is 12,000 BTUh or lower. Use Air Conditioning Contractors of America (Manual J and S); American Society of Heating, Refrigerating, and Air-Conditioning Engineers; or other approved engineering method to calculate heating load estimates and select the furnace. Excessive oversizing of the furnace may cause the furnace and/or vent to fail prematurely, customer discomfort and/or vent freezing.

Failure to follow these guidelines is considered faulty installation and/or misapplication of the furnace; and resulting failure, damage, or repairs may impact warranty coverage.

SPECIFICATIONS

Unit Size		30026A	30040A	36040B	36060A	48060B	48080B
HEATING AND CAPACITY AND EFFICIENCY							
Input BTUh*		26,000	40,000	40,000	60,000	60,000	80,000
Output Capacity (BTUh)†)		25,000	39,000	39,000	56,000	58,000	78,000
Certified Temperature Rise Range - °F (°C)		25-55 (14-31)	40-70 (22-39)	40-70 (22-39)	35-65 (19-36)	40-70 (22-39)	40-70 (22-39)
AFUE	Upflow/Hz	96.0%	96.0%	96.7%	95.0%	97.0%	97.0%
	Downflow	95.0%	95.0%	95.0%	95.0%	95.0%	95.0%
AIRFLOW CAPACITY AND BLOWER DATA							
Rated Certified External Static Pressure	Heating	0.10	0.10	0.10	0.12	0.12	0.12
	Cooling	0.50	0.50	0.50	0.50	0.50	0.50
Airflow CFM @ Rated ESP (CFM)‡	Heating	620	705	700	945	1030	1290
	Cooling	175-970	155-1000	160-1075	200-1165	315-1580	370-1625
Direct Drive Motor HP		1/3	1/2	1/2	1/2	3/4	3/4
Motor Full Load Amps		4.4	6.3	6.7	6.3	8.8	9.2
Heating Blower Control (Htg OFF-Delay)		Adjustable: 90, 120 (factory-set), 150, 180 seconds					
Cooling Blower Control (Clg OFF-Delay)		Adjustable: 90 (factory-set), 5, 30 seconds					
Blower Wheel Diameter x Width - In. (mm)		11x7 (279x178)	11x7 (279x178)	11x8 (279x203)	11x7 (279x178)	11x8 (279x203)	11x8 (279x203)
Air Filtration System		Field Supplied Filter					
Filter used for Certified Watt Data		325531-40**					
ELECTRICAL DATA							
Unit Volts-Hertz-Phase		115-60-1					
Operating Voltage Range	Min-Max	104-127					
Maximum Unit Amps		5.2	7.0	7.4	7.1	10.1	10.0
Unit Ampacity		7.5	9.7	10.2	9.8	13.6	13.4
Maximum Wire Length (Measure 1 way in Ft/M)		50/15.2	38/11.7	36/11.1	38/11.5	27/8.3	27/8.4
Minimum Wire Size	AWG	14	14	14	14	14	14
Max. Fuse/Ckt Bk Size (Time-Delay Type Recommended)	Amps	15	15	15	15	15	15
Transformer Capacity (24 VAC output)		40VA					
External Control Power Available	Heating	12VA					
	Cooling	35VA					
GAS CONTROLS							
Burners		2	2	3	3	4	4
Gas Connection Size		1/2 in. NPT					
Gas Valve (Redundant)	Mfr	White Rodgers™					
Min. inlet pressure	(in.w.c.)	4.5 (Natural Gas)					
Max. inlet pressure	(in.w.c.)	13.6 (Natural Gas)					
Ignition Device		Silicon Nitride					
Factory installed orifice		Size 44					
CONNECTIONS							
Communication System		None					
Thermostat Connections		G,C, W, Y, R					
Accessory Connections		EAC-1 (115 VAC); HUM (24 VAC); 1-STG AC (via Y)					

*. Gas input ratings are certified for elevations to 2000 ft. (610 M). In USA, For elevations above 2000 ft (610 M), reduce ratings 4 percent for each 1000 ft (305 M) above sea level. Refer to National Fuel Gas Code NFPA 54/ANSI Z223.1 Table F.4 or furnace installation instructions.

†. Capacity in accordance with U.S. Government DOE test procedures.

‡. Airflow shown is for bottom only return-air supply for the as-shipped speed tap. For air delivery above 1800 CFM, see Air Delivery table for other options. A filter is required for each return-air supply. An airflow reduction of up to 7 percent may occur when using the factory-specified 4-5/16-in. (110 mm) wide, high efficiency media filter.

**. See Accessory List for part numbers available.

Manufacturer reserves the right to change, at any time, specifications and designs without notice and without obligations.

UNIT SIZE		60080C	60100C	66120D	66140D
HEATING AND CAPACITY AND EFFICIENCY					
Input BTUh*		80,000	100,000	120,000	140,000
Output Capacity (BTUh)†)		78,000	97,000	116,000	135,000
Certified Temperature Rise Range - °F (°C)		40-70 (22-39)	40-70 (22-39)	40-70 (22-39)	45-75 (25-42)
AFUE	Upflow/Hz	97.0%	96.3%	96.1%	95.0%
	Downflow	95.0%	95.0%	95.0%	95.0%
AIRFLOW CAPACITY AND BLOWER DATA					
Rated Certified External Static Pressure	Heating	0.12	0.15	0.20	0.20
	Cooling	0.50	0.50	0.50	0.50
Airflow CFM @ Rated ESP (CFM)‡	Heating	1310	1730	1965	2040
	Cooling	225-2125	375-2145	290-2240	380-2230
Direct Drive Motor HP		1	1	1	1
Motor Full Load Amps		11.5	11.7	11.5	11.7
Heating Blower Control (Htg OFF-Delay)		Adjustable: 90, 120 (factory-set), 150, 180 seconds			
Cooling Blower Control (Clg OFF-Delay)		Adjustable: 90 (factory-set), 5, 30 seconds			
Blower Wheel Diameter x Width - In. (mm)		11x10 (279x254)	11x10 (279x254)	11x11 (279x279)	11x11 (279x279)
Air Filtration System		Field Supplied Filter			
Filter used for Certified Watt Data		325531-40**			
ELECTRICAL DATA					
Unit Volts-Hertz-Phase		115-60-1			
Operating Voltage Range	Min-Max	104-127			
Maximum Unit Amps		13.1	12.6	13.2	12.6
Unit Ampacity		17.3	16.7	17.4	16.7
Maximum Wire Length (Measure 1 way in Ft/M)		33/10.1	34/10.5	33/10.0	34/10.5
Minimum Wire Size	AWG	14	14	14	14
Max. Fuse/Ckt Bkr Size (Time-Delay Type Recommended)	Amps	15	15	15	15
Transformer Capacity (24 VAC output)		40VA			
External Control Power Available	Heating	12VA			
	Cooling	35VA			
GAS CONTROLS					
Burners		4	5	6	7
Gas Connection Size		1/2 in. NPT			
Gas Valve (Redundant)	Mfr	White Rodgers™			
Min. inlet pressure	(in.w.c.)	4.5 (Natural Gas)			
Max. inlet pressure	(in.w.c.)	13.6 (Natural Gas)			
Ignition Device		Silicon Nitride			
Factory installed orifice		Size 44			
CONNECTIONS					
Communication System		None			
Thermostat Connections		G, C, W, Y, R			
Accessory Connections		EAC-1 (115 VAC); HUM (24 VAC); 1-STG AC (via Y)			

*. Gas input ratings are certified for elevations to 2000 ft. (610 M). In USA, For elevations above 2000 ft (610 M), reduce ratings 4 percent for each 1000 ft (305 M) above sea level. Refer to National Fuel Gas Code NFPA 54/ANSI Z223.1 Table F.4 or furnace installation instructions.

†. Capacity in accordance with U.S. Government DOE test procedures.

‡. Airflow shown is for bottom only return-air supply for the as-shipped speed tap. For air delivery above 1800 CFM, see Air Delivery table for other options. A filter is required for each return-air supply. An airflow reduction of up to 7 percent may occur when using the factory-specified 4-5/16-in. (110 mm) wide, high efficiency media filter.

**. See Accessory List for part numbers available.

Manufacturer reserves the right to change, at any time, specifications and designs without notice and without obligations.

AIR DELIVERY (with filter)

Air Delivery - CFM (with filter)

Unit Size	Airflow Setting	Default Setting	External Static Pressure (in. w.c.)									
			0.1	0.2	0.3	0.4	0.5	0.6	0.7	0.8	0.9	1
30026A	1	Cont. Fan	470	395	320	250	175	-	-	-	-	-
	2		510	445	370	305	240	165	-	-	-	-
	3		535	470	400	335	275	200	130	-	-	-
	4		560	495	430	365	310	245	170	-	-	-
	5		595	535	470	405	350	295	225	155	-	-
	6	Heat	620	560	500	435	375	320	265	195	130	-
	7		665	605	550	490	430	380	330	270	205	140
	8		705	650	600	540	480	430	380	335	280	215
	9		745	695	645	590	535	480	435	385	340	285
	10		785	735	685	635	585	530	480	435	390	350
	11		820	775	730	680	630	575	525	485	440	400
	12		855	810	765	720	675	620	570	525	485	445
	13		890	845	800	755	710	665	615	570	530	490
	14		945	905	860	820	775	735	690	640	595	560
	15		980	940	900	860	820	780	735	690	645	605
	16		1025	985	950	910	870	830	795	750	710	665
	17		1065	1030	995	955	920	880	845	805	760	720
	18	Cooling	1115	1080	1045	1010	970	935	900	865	825	785
30040A	1	Cont. Fan	390	335	275	215	155	-	-	-	-	-
	2		405	355	300	240	185	125	-	-	-	-
	3		455	405	355	305	250	200	140	-	-	-
	4		485	440	390	345	295	245	190	140	-	-
	5		530	485	440	395	350	300	255	205	155	-
	6		565	525	485	440	400	355	310	270	220	170
	7		600	560	520	480	440	400	360	320	275	230
	8		645	605	570	530	495	455	415	375	335	300
	9	Heat	705	665	630	595	560	525	490	455	415	380
	10		720	685	650	615	580	545	515	480	440	405
	11		760	730	695	660	630	595	560	530	495	460
	12		820	785	755	725	690	660	630	600	570	535
	13		865	835	805	775	745	715	690	660	630	600
	14		910	885	855	825	800	770	740	710	685	655
	15		965	935	905	880	855	825	800	770	745	715
	16		1005	975	950	925	900	870	845	820	795	765
	17		1055	1025	1000	975	950	925	900	875	850	825
	18	Cooling	1100	1075	1050	1025	1000	980	955	930	905	880
36040B	1	Cont. Fan	415	350	290	230	160	105	-	-	-	-
	2		450	385	325	270	210	150	-	-	-	-
	3		480	420	360	310	260	195	140	-	-	-
	4		525	470	415	360	315	265	205	150	-	-
	5		565	515	460	410	360	315	265	210	160	-
	6		605	555	505	455	405	365	320	270	215	170
	7		655	605	560	510	465	420	385	340	290	240
	8	Heat	700	655	610	565	520	475	435	400	360	310
	9		740	695	655	610	570	525	485	450	415	380
	10		780	740	700	660	615	575	535	500	465	430
	11		830	790	750	715	675	635	595	560	520	490
	12		880	840	800	765	730	690	655	615	575	545
	13		930	895	860	825	790	750	715	680	645	610
	14		980	945	910	875	845	810	775	740	705	670
	15		1030	995	960	930	895	860	830	795	760	730
	16		1085	1050	1020	985	955	925	890	860	825	795
	17		1140	1105	1080	1045	1015	985	955	925	895	865
	18	Cooling	1220	1185	1150	1115	1075	1040	1005	965	925	885

Manufacturer reserves the right to change, at any time, specifications and designs without notice and without obligations.

Air Delivery - CFM (with filter) (Continued)

Unit Size	Airflow Setting	Default Setting	External Static Pressure (in. w.c.)									
			0.1	0.2	0.3	0.4	0.5	0.6	0.7	0.8	0.9	1
36060A	1	Cont. Fan	440	380	320	260	200	140	-	-	-	-
	2		460	400	345	285	225	165	-	-	-	-
	3		510	460	405	350	295	240	185	130	-	-
	4		575	525	475	425	375	325	280	230	175	-
	5		605	560	510	460	415	365	320	270	225	170
	6		665	615	570	525	480	435	390	350	305	260
	7		700	660	615	570	525	485	440	400	355	315
	8		750	710	670	625	585	545	505	460	420	385
	9		810	770	730	690	650	615	575	535	495	460
	10		865	825	790	750	715	680	640	605	565	530
	11		915	880	845	810	775	740	705	670	630	595
	12	Heat	955	920	890	855	820	785	750	715	680	650
	13		1015	980	950	915	885	850	820	785	755	720
	14		1070	1040	1005	975	945	915	885	855	820	790
	15		1105	1075	1045	1015	985	955	925	895	865	835
	16		1165	1135	1105	1080	1050	1020	995	965	935	910
	17		1215	1190	1160	1135	1105	1080	1055	1025	995	970
	18	Cooling	1270	1240	1215	1190	1165	1135	1110	1085	1060	1030
48060B	1	Cont. Fan	590	520	455	380	315	250	185	120	-	-
	2		640	575	515	445	375	320	260	195	130	-
	3		710	650	595	535	470	410	355	305	245	175
	4		755	700	645	590	535	465	410	360	310	260
	5		835	780	730	680	630	580	515	465	420	370
	6		890	840	790	745	695	645	595	540	490	445
	7		960	915	870	825	780	735	690	635	580	535
	8		1010	965	920	875	835	790	745	705	650	605
	9	Heat	1040	995	950	910	870	825	785	745	700	650
	10		1095	1055	1015	975	935	895	855	815	775	730
	11		1165	1130	1090	1050	1010	975	940	900	865	830
	12		1235	1200	1160	1125	1090	1055	1020	985	945	915
	13		1315	1280	1245	1210	1175	1140	1110	1075	1045	1010
	14		1380	1345	1315	1280	1250	1215	1185	1150	1120	1090
	15		1455	1420	1390	1360	1330	1300	1270	1240	1210	1180
	16		1525	1495	1465	1435	1410	1380	1350	1325	1295	1270
	17		1605	1580	1550	1525	1500	1470	1445	1420	1395	1370
	18	Cooling	1720	1685	1650	1615	1580	1545	1505	1470	1430	1395
48080B	1	Cont. Fan	625	560	495	430	370	310	250	190	130	-
	2		695	635	575	515	455	400	345	285	235	175
	3		760	700	645	590	530	480	430	370	325	270
	4		815	765	710	660	605	550	500	455	400	355
	5		875	820	770	725	675	620	570	525	475	430
	6		945	895	845	800	755	710	655	610	565	525
	7		1005	960	915	870	830	785	740	690	645	610
	8		1070	1025	985	940	900	855	815	770	725	685
	9		1145	1100	1060	1020	980	940	900	860	820	775
	10		1215	1175	1135	1095	1055	1020	980	940	905	865
	11		1295	1255	1215	1180	1145	1105	1070	1035	1000	960
	12	Heat	1300	1265	1225	1190	1155	1120	1085	1050	1010	980
	13		1355	1320	1280	1245	1210	1175	1135	1100	1070	1030
	14		1440	1400	1365	1335	1300	1265	1230	1200	1165	1130
	15		1515	1480	1445	1415	1380	1350	1320	1285	1255	1220
	16		1575	1540	1510	1480	1450	1415	1385	1355	1320	1290
	17		1655	1625	1590	1560	1530	1500	1470	1440	1410	1375
	18	Cooling	1760	1730	1700	1665	1625	1585	1535	1490	1450	1405

Manufacturer reserves the right to change, at any time, specifications and designs without notice and without obligations.

Air Delivery - CFM (with filter) (Continued)

Unit Size	Airflow Setting	Default Setting	External Static Pressure (in. w.c.)									
			0.1	0.2	0.3	0.4	0.5	0.6	0.7	0.8	0.9	1
60080C	1	Cont. Fan	615	515	415	325	225	140	-	-	-	-
	2		695	610	515	430	340	255	165	-	-	-
	3		805	725	645	560	485	405	325	245	165	-
	4		870	795	720	640	560	490	415	345	270	195
	5		955	885	815	740	670	595	530	460	390	330
	6		1070	1005	935	870	805	740	675	615	545	485
	7		1150	1085	1025	960	900	835	775	710	650	590
	8		1245	1185	1125	1065	1005	950	890	835	775	720
	9	Heat	1325	1270	1215	1160	1105	1050	995	945	885	830
	10		1415	1360	1310	1255	1205	1150	1100	1045	995	945
	11		1535	1485	1435	1385	1335	1285	1240	1195	1145	1095
	12		1610	1560	1515	1465	1420	1375	1325	1280	1235	1190
	13		1715	1670	1625	1580	1535	1495	1450	1405	1360	1315
	14		1820	1775	1735	1690	1650	1610	1570	1530	1485	1445
	15		1915	1875	1835	1795	1760	1720	1680	1645	1605	1565
	16		1995	1960	1920	1885	1845	1810	1775	1740	1700	1665
	17	Cooling	2105	2070	2035	2000	1970	1935	1900	1870	1835	1805
	18		2305	2260	2215	2170	2125	2080	2030	1985	1935	1890
60100C	1	Cont. Fan	720	630	540	450	375	285	205	130	-	-
	2		815	735	650	570	490	415	345	265	190	135
	3		910	835	760	680	605	535	465	400	330	255
	4		995	925	855	780	710	640	575	510	445	385
	5		1105	1040	975	910	845	780	710	650	585	530
	6		1200	1140	1080	1020	955	895	835	770	710	655
	7		1290	1230	1175	1120	1065	1005	945	885	825	770
	8		1375	1320	1265	1215	1160	1105	1050	995	935	880
	9		1475	1425	1375	1325	1275	1220	1170	1115	1060	1010
	10		1565	1520	1470	1425	1375	1330	1280	1230	1175	1125
	11		1675	1625	1580	1535	1490	1450	1400	1355	1305	1255
	12	Heat	1755	1710	1665	1625	1580	1535	1490	1450	1405	1360
	13		1885	1840	1795	1755	1715	1670	1630	1590	1550	1505
	14		1970	1925	1885	1845	1805	1765	1725	1685	1645	1610
	15		2085	2045	2005	1960	1925	1885	1845	1810	1775	1735
	16		2145	2105	2070	2030	1990	1955	1920	1885	1845	1805
	17		2185	2145	2105	2070	2035	1995	1960	1925	1885	1850
	18	Cooling	2315	2280	2240	2200	2145	2090	2035	1980	1925	1870
66120D	1	Cont. Fan	720	610	490	390	290	205	110	-	-	-
	2		800	695	590	480	390	300	220	135	-	-
	3		870	770	675	570	475	395	310	235	155	-
	4		970	880	785	700	605	525	440	365	290	230
	5		1060	975	890	805	725	635	555	485	410	345
	6		1145	1070	985	905	830	750	665	595	525	455
	7		1250	1175	1105	1025	955	880	805	730	660	595
	8		1345	1280	1205	1135	1065	1000	930	860	785	725
	9		1435	1370	1305	1240	1170	1105	1045	980	910	845
	10		1545	1485	1425	1360	1300	1235	1175	1115	1050	990
	11		1645	1590	1530	1475	1415	1350	1295	1240	1180	1125
	12		1740	1685	1635	1580	1525	1465	1410	1355	1300	1250
	13		1830	1775	1725	1675	1620	1565	1510	1455	1405	1355
	14	Heat	2015	1965	1920	1870	1825	1775	1725	1680	1630	1580
	15		2035	1990	1940	1895	1850	1805	1760	1710	1660	1615
	16		2140	2095	2050	2005	1960	1915	1875	1830	1785	1740
	17		2230	2190	2150	2110	2070	2025	1985	1945	1905	1860
	18	Cooling	2425	2385	2340	2290	2240	2190	2135	2080	2025	1965

Manufacturer reserves the right to change, at any time, specifications and designs without notice and without obligations.

Air Delivery - CFM (with filter) (Continued)

Unit Size	Airflow Setting	Default Setting	External Static Pressure (in. w.c.)									
			0.1	0.2	0.3	0.4	0.5	0.6	0.7	0.8	0.9	1
66140D	1	Cont. Fan	795	685	585	475	380	290	205	135	-	-
	2		900	795	700	605	505	420	340	260	180	-
	3		960	865	775	685	590	500	420	345	265	195
	4		1050	960	870	785	700	610	530	455	385	315
	5		1160	1075	985	910	835	755	670	590	525	455
	6		1260	1180	1100	1020	950	880	800	720	650	585
	7		1355	1285	1205	1130	1060	995	925	855	775	705
	8		1445	1375	1300	1230	1160	1095	1035	970	895	825
	9		1545	1480	1415	1345	1280	1220	1155	1095	1035	965
	10		1650	1585	1520	1460	1395	1330	1275	1215	1155	1100
	11		1740	1680	1620	1560	1500	1435	1380	1320	1265	1210
	12		1840	1785	1725	1670	1615	1555	1500	1445	1390	1340
	13		1940	1885	1830	1775	1720	1670	1610	1555	1505	1450
	14		2050	1995	1945	1890	1840	1790	1735	1680	1630	1575
	15	Heat	2095	2040	1990	1940	1890	1840	1790	1735	1680	1630
	16		2150	2100	2050	2000	1950	1905	1855	1800	1745	1695
	17		2255	2205	2155	2110	2060	2015	1965	1915	1860	1810
	18	Cooling	2420	2370	2325	2280	2230	2165	2095	2025	1955	1880

NOTE:

1. A filter is required for each return-air inlet. Airflow performance included 3/4-in. (19 mm) washable filter media such as contained in a factory - authorized accessory filter rack. See accessory list. To determine airflow performance without this filter, assume an additional 0.1 in. w.c. available external static pressure.
2. **Adjust the blower airflow setting as necessary for the proper air temperature rise for each installation.**
3. Airflows over 1800 CFM require bottom return, two-side return, or bottom and side return. A minimum filter size of 20" x 25" (508 x 635 mm) is required.
4. For upflow applications, air entering from one side into both the side of the furnace and a return air base counts as a side and bottom return
5. The -- entry indicates unstable operating conditions

Airflow Settings

	Default Airflow Settings*		Designated Airflow Settings	
Unit Size	Heating	Cooling	Heating	Constant Fan
30026A	6	18	(5-14)	(1-7)
30040A	9	18	(6-11)	(1-1)
36040B	8	18	(5-9)	(1-5)
36060A	12	18	(9-12)	(1-3)
48060B	9	18	(5-10)	(1-7)
48080B	12	18	(7-13)	(1-1)
60080C	9	17	(5-11)	(1-8)
60100C	12	18	(10-12)	(1-4)
66120D	14	18	(11-14)	(1-3)
66140D	15	18	(10-15)	(1-1)

*. Setting #1 is the default setting for Constant Fan

TYPICAL WIRING SCHEMATIC

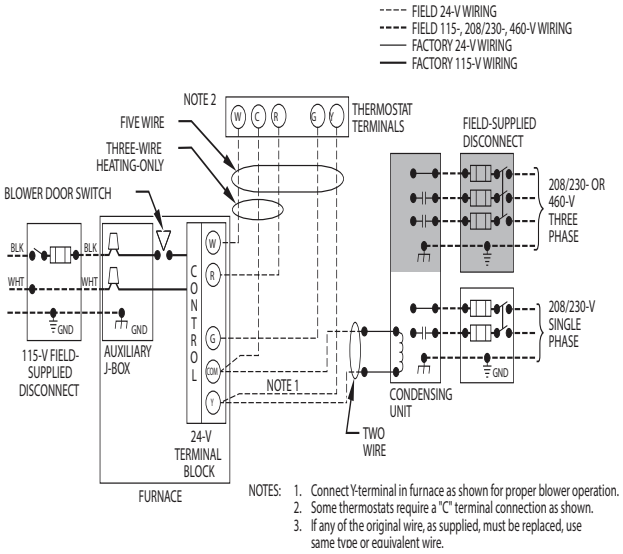

A190079

FURNACE CONTROL BOARD

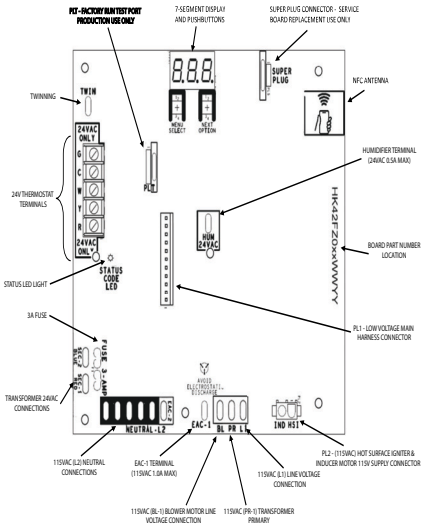

A210192

MAXIMUM ALLOWABLE EXPOSED VENT LENGTH

Maximum Allowable Exposed Vent Lengths in Unconditioned Space Insulation Table - Ft.

Winter Design Temp °F	Unit Size	26,000* BTUH					
		Uninsulated		3/8-in. Insulation		1/2-in. Insulation	
	Pipe Dia. in.	1 ½	2	1 ½	2	1 ½	2
	20	20	20	50	45	60	50
	0	5	5	25	20	30	25
	-20			15	10	20	15
	-40			10	5	15	10

Winter Design Temp °F	Unit Size	40,000* BTUH									60,000 BTUH											
		Uninsulated			3/8-in. Insulation			1/2-in. Insulation			Uninsulated				3/8-in. Insulation				1/2-in. Insulation			
	Pipe Dia. in.	1 ½	2	2 ½	1 ½	2	2 ½	1 ½	2	2 ½	1 ½	2	2 ½	3	1 ½	2	2 ½	3	1 ½	2	2 ½	3
	20	20	20	20	20	50	45	20	60	50	20	30	30	25	20	75	65	60	20	85	75	65
	0	10	5	5	20	25	20	20	30	25	15	15	10	10	20	40	30	25	20	45	40	30
	-20	5			20	15	10	20	20	15	10	5			20	25	20	15	20	30	25	20
	-40				15	10	5	15	15	10	5				20	15	15	10	20	20	15	10

Winter Design Temp °F	Unit Size	80,000 BTUH														
		Uninsulated					3/8-in. Insulation					1/2-in. Insulation				
	Pipe Dia. in.	1 ½	2	2 ½	3	4	1 ½	2	2 ½	3	4	1 ½	2	2 ½	3	4
	20	15	40	40	35	30	15	50	90	75	65	15	50	70	70	70
	0	15	20	15	10	5	15	50	45	35	30	15	50	50	40	35
	-20	15	10	5			15	35	30	20	15	15	40	30	25	15
	-40	10	5				15	25	20	15	5	15	30	25	20	10

Winter Design Temp °F	Unit Size	100,000 BTUH												120,000 BTUH								
		Uninsulated				3/8-in. Insulation				1/2-in. Insulation				Uninsulated			3/8-in. Insulation			1/2-in. Insulation		
	Pipe Dia. in.	2	2 ½	3	4	2	2½	3	4	2	2½	3	4	2 ½	3	4	2 ½	3	4	2 ½	3	4
	20	20	50	40	35	20	80	95	80	20	80	105	90	10	50	40	10	75	95	10	75	105
	0	20	20	15	10	20	55	45	35	20	65	55	45	10	20	15	10	55	45	10	65	50
	-20	15	10	5		20	35	30	20	20	45	35	25	10	10		10	35	25	10	45	30
	-40	10	5			20	25	20	10	20	30	25	15	10	5		10	25	15	10	30	20

Winter Design Temp °F	Unit Size	140,000* BTUH								
		Uninsulated			3/8-in. Insulation			1/2-in. Insulation		
	Pipe Dia. in.	2 ½	3	4	2 ½	3	4	2 ½	3	4
	20	5	55	50	5	65	105	5	65	125
	0	5	25	15	5	65	50	5	65	60
	-20	5	10	5	5	45	30	5	50	40
	-40	5	5		5	30	20	5	35	25

*. Not all model families have this size.

Maximum Allowable Exposed Vent Length in Unconditioned Space - Meters

Winter Design Temp °C	Unit Size	26,000* BTUH					
		Uninsulated		3/8-in. Insulation		1/2-in. Insulation	
	Pipe Dia. mm	38	51	38	51	38	51
	-7	6.1	6.1	15.2	13.7	18.3	15.2
	-18	1.5	1.5	7.6	6.1	9.1	7.6
	-29			4.6	3.0	6.1	4.6
	-40			3.0	1.5	4.6	3.0

Winter Design Temp °C	Unit Size	40,000 BTUH									60,000 BTUH											
		Uninsulated			3/8-in. Insulation			1/2-in. Insulation			Uninsulated				3/8-in. Insulation				1/2-in. Insulation			
	Pipe Dia. mm	38	51	64	38	51	64	38	51	64	38	51	64	76	38	51	64	76	38	51	64	76
	-7	6.1	6.1	6.1	6.1	15.2	13.7	6.1	18.3	15.2	6.1	9.1	9.1	7.6	6.1	22.9	19.8	18.3	6.1	25.9	22.9	19.8
	-18	3.0	1.5	1.5	6.1	7.6	6.1	6.1	9.1	7.6	4.6	4.6	3.0	3.0	6.1	12.2	9.1	7.6	6.1	13.7	12.2	9.1
	-29	1.5			6.1	4.6	3.0	6.1	6.1	4.6	3.0	1.5			6.1	7.6	6.1	4.6	6.1	9.1	7.6	6.1
	-40				4.6	3.0	1.5	4.6	4.6	3.0	1.5				6.1	4.6	4.6	3.0	6.1	6.1	4.6	3.0

Manufacturer reserves the right to change, at any time, specifications and designs without notice and without obligations.

Winter Design Temp °C	Unit Size	80,000 BTUH														
		Uninsulated					3/8-in. Insulation					1/2-in. Insulation				
	Pipe Dia. mm	38	51	64	76	102	38	51	64	76	102	38	51	64	76	102
	-7	4.6	12.2	12.2	10.7	9.1	4.6	15.2	27.4	22.9	19.8	4.6	15.2	21.3	21.3	21.3
	-18	4.6	6.1	4.6	3.0	1.5	4.6	15.2	13.7	10.7	9.1	4.6	15.2	15.2	12.2	10.7
	-29	4.6	3.0	1.5			4.6	10.7	9.1	6.1	4.6	4.6	12.2	9.1	7.6	4.6
	-40	3.0	1.5				4.6	7.6	6.1	4.6	1.5	4.6	9.1	7.6	6.1	3.0

Winter Design Temp °C	Unit Size	100,000 BTUH												120,000 BTUH								
		Uninsulated				3/8-in. Insulation				1/2-in. Insulation				Uninsulated			3/8-in. Insulation			1/2-in. Insulation		
	Pipe Dia. mm	51	64	76	102	51	64	76	102	51	64	76	102	64	76	102	64	76	102	64	76	102
	-7	6.1	15.2	12.2	10.7	6.1	24.4	28.9	24.4	6.1	24.4	32.0	27.4	3.0	15.2	12.2	3.0	22.9	28.9	3.0	22.9	32.0
	-18	6.1	6.1	4.6	3.0	6.1	16.8	13.7	10.7	6.1	19.8	16.7	13.7	3.0	6.1	4.6	3.0	16.8	13.7	3.0	19.8	15.2
	-29	4.6	3.0	1.5		6.1	10.7	9.1	6.1	6.1	13.7	10.7	7.6	3.0	3.0		3.0	10.7	7.6	3.0	13.7	9.1
	-40	3.0	1.5			6.1	7.6	6.1	3.0	6.1	9.1	7.6	4.6	3.0	1.5		3.0	7.6	4.6	3.0	9.1	6.1

Winter Design Temp °C	Unit Size	140,000* BTUH*								
		Uninsulated			3/8-in. Insulation			1/2-in. Insulation		
	Pipe Dia. mm	64	76	102	64	76	102	64	76	102
	-7	1.5	16.7	15.2	1.5	19.8	32.0	1.5	19.8	38.1
	-18	1.5	7.6	4.6	1.5	19.8	15.2	1.5	19.8	18.3
	-29	1.5	3.0	1.5	1.5	13.7	9.1	1.5	15.2	12.2
	-40	1.5	1.5		1.5	9.1	6.1	1.5	35	7.6

*. Not all model families have this size.

MAXIMUM EQUIVALENT VENT LENGTH

NOTE: Maximum Equivalent Vent Length (MEVL) includes standard and concentric vent termination and does NOT include elbows. Use Deductions from Maximum Equivalent Vent Length to determine allowable vent length for each application.

Maximum Equivalent Vent Length - Feet

Altitude (feet)	Unit Size	26,000 [2]		40,000 [1]			60,000 [2]				80,000					100,000 [3]				120,000			140,000 [3]		
	Pipe Dia. (in)	1 ½	2	1 ½	2	2 ½	1 ½	2	2 ½	3	1 ½	2	2 ½	3	4	2	2 ½	3	4	2 ½	3	4	2 ½	3	4
	0-2000	70	200	40	155	185	20	100	175	200	15	55	130	175	200	20	80	175	200	10	75	185	5	65	155
	2001-3000	65	190	35	150	175		95	165	185	10	49	125	165	185	15	75	165	185		70	175		60	140
	3001-4000	60	175	30	135	160	16	90	155	175			115	155	175			155	175	5	65	165			120
	4001-4500	55	160	25	130	155	15	85	150	170		44	110	150	165	10	70		170	N/A	60	160		50	110
	4501-5000				125	145		80	145	165				145	160		65	150	165					45	100
	5001-6000	50	145	20	120	130		75	140	155		41	100	135	150			140	155			155	N/A	35	80
	6001-7000	45	135	15	110	120	13	70	130	145	N/A	38	90	125	140		60	135	145		50	140		30	65
	7001-8000	40	120	10	100	110	10	65	120	135		36		120	125	N/A	55	125	135		46	130		25	45
	8001-9000	35	110		90	95	5	60	115	125		33	80	110	115		50	115	125		43	120		15	30
	9001-10000	30	95	5	80	85	N/A	55	105	115		30	75	100	105		45	100	115		39	115		10	15

Maximum Equivalent Vent Length - Meters

Altitude (meters)	Unit Size	26,000 [2]		40,000 [1]			60,000 [2]				80,000					100,000 [3]				120,000			140,000 [3]		
	Pipe Dia. (mm)	38	51	38	51	64	38	51	64	76	38	51	64	76	102	51	64	76	102	64	76	102	64	76	102
	0-610	21.3	60.9	12.1	47.2	56.3	6.0	30.4	53.3	60.9	4.5	16.7	39.6	53.3	60.9	6.0	24.3	53.3	60.9	3.0	22.8	56.3	1.5	19.8	47.2
	611-914	19.8	57.9	10.6	45.7	53.3		28.9	50.2	56.3	3.0	14.9	38.1	50.2	56.3	4.5	22.8	50.2	56.3		21.3	53.3		18.2	42.6
	915-1219	18.2	53.3	9.1	41.1	48.7	4.8	27.4	47.2	53.3			35.0	47.2	53.3			47.2	53.3	1.5	19.8	50.2			36.5
	1220-1370	16.7	48.7	7.6	39.6	47.2	4.5	25.9	45.7	51.8		13.4	33.5	45.7	50.2	3.0	21.3		51.8	NA	18.2	48.7		15.2	33.5
	1371-1524				38.1	44.1		24.3	44.1	50.2				44.1	48.7		19.8	45.7	50.2					13.7	30.4
	1525-1829	15.2	44.1	6.0	36.5	39.6		22.8	42.6	47.2		12.4	30.4	41.1	45.7			42.6	47.2			47.2		10.6	24.3
	1830-2134	13.7	41.1	4.5	33.5	36.5	3.9	21.3	39.6	44.1	NA	11.5	27.4	38.1	42.6		18.2	41.1	44.1		15.2	42.6		9.1	19.8
	2135-2438	12.1	36.5	3.0	30.4	33.5	3.0	19.8	36.5	41.1		10.9		36.5	38.1	NA	16.7	38.1	41.1		14.0	39.6		7.6	13.7
	2439-2743	10.6	33.5		27.4	28.9	1.5	18.2	35.0	38.1		10.0	24.3	33.5	35.0		15.2	35.0	38.1		13.1	36.5		4.5	9.1
	2744-3048	9.1	28.9	1.5	24.3	25.9	NA	16.7	32.0	35.0		9.1	22.8	30.4	32.0		13.7	30.4	35.0		11.8	35.0		3.0	4.5

1. 40K Inducer Outlet Restrictor disk (P/N 337683-401; 1.25-in. (32 mm) Dia.) shipped in the loose parts bag or available through Replacement Components required under 10-ft. (3 M) TEVL in all orientations. Required for installations from 0 - 2000 ft. (0 to 610 M) above sea level. Failure to use an outlet restrictor may result in flame disturbances or flame sense lock-out.
2. 26K (shipped in loose parts bag) & 60K Inducer Outlet Restrictor disk (P/N 337683-401; 1.25-in. (32 mm) Dia. available through Replacement Components) required for less than 5-ft. (1.5 M) TEVL in downflow and horizontal orientations only. Required for installations from 0 - 2000 ft. (0 to 610 M) above sea level.

3. 120K & 140K Inducer Outlet Restrictor disk (P/N 337683-402; 1.50-in. (38 mm) Dia. available through Replacement Components) required for less than 5-ft. (1.5 M) TEVL in downflow and horizontal orientations only. Required for installations from 0 - 2000 ft. (0 to 610 M) above sea level.

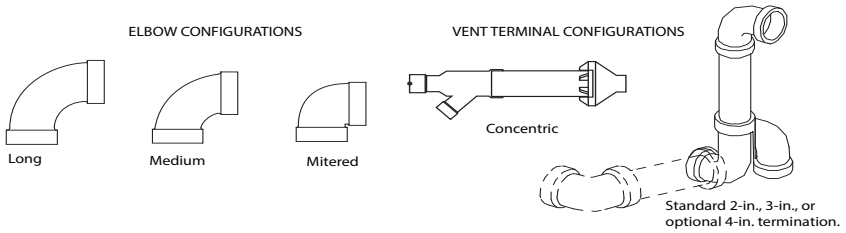

Deductions from Maximum Equivalent Vent Length - Ft. (M)

Pipe Diameter (in):	1-1/2		2		2-1/2		3		4	
Mitered 90º Elbow	8	(2.4)	8	(2.4)	8	(2.4)	8	(2.4)	8	(2.4)
Medium Radius 90º Elbow	5	(1.5)	5	(1.5)	5	(1.5)	5	(1.5)	5	(1.5)
Long Radius 90º Elbow	3	(0.9)	3	(0.9)	3	(0.9)	3	(0.9)	3	(0.9)
Mitered 45º Elbow	4	(1.2)	4	(1.2)	4	(1.2)	4	(1.2)	4	(1.2)
Medium Radius 45º Elbow	2.5	(0.8)	2.5	(0.8)	2.5	(0.8)	2.5	(0.8)	2.5	(0.8)
Long Radius 45º Elbow	1.5	(0.5)	1.5	(0.5)	1.5	(0.5)	1.5	(0.5)	1.5	(0.5)
Tee	16	(4.9)	16	(4.9)	16	(4.9)	16	(4.9)	16	(4.9)
Concentric Vent Termination	NA		0	(0.0)	NA		0	(0.0)	NA	
Standard Vent Termination	0	(0.0)	0	(0.0)	0	(0.0)	0	(0.0)	0	(0.0)

NOTE:

1. Use only the smallest diameter pipe possible for venting. Over-sizing may cause flame disturbance or excessive vent terminal icing or freeze-up.
2. NA - Not allowed. Pressure switch will not close, or flame disturbance may result.
3. Vent sizing for Canadian installations over 4500 ft (1370 M) above sea level are subject to acceptance by local authorities having jurisdiction.
4. Size both the combustion air and vent pipe independently, then use the larger size for both pipes.
5. Assume the two 45_ elbows equal one 90_ elbow. Wide radius elbows are desirable and may be required in some cases.
6. Elbow and pipe sections within the furnace casing and at the vent termination should not be included in vent length or elbow count.
7. The minimum pipe length is 5 ft. (2 M) linear feet (meters) for all applications.
8. Use 3-in. (76 mm) diameter vent termination kit for installations requiring 4-in. (102 mm) diameter pipe

Venting System Length Calculations

The Total Equivalent Vent Length (TEVL) for **EACH** combustion air or vent pipe equals the length of the venting system, plus the equivalent length of elbows used in the venting system from Deductions from Maximum Equivalent Vent Length - Ft. (M) Table.

Standard vent terminations or factory accessory concentric vent terminations count for zero deduction.

See vent system manufacturer's data for equivalent lengths of flexible vent pipe or other termination systems. **DO NOT ASSUME** that one foot of flexible vent pipe equals one foot of straight PVC/ABS DWV vent pipe.

Compare the Total Equivalent Vent Length to the Maximum Equivalent Vent Lengths in Maximum Equivalent Vent Length Table.

Example 1

A direct-vent 60,000 BTUH furnace installed at 2100 ft. (640M). Venting system includes **FOR EACH PIPE:** 70 feet (22 M) of vent pipe, 65 feet (20 M) of combustion air inlet pipe, (3) 90º long-radius elbows, (2) 45º long-radius elbows, and a factory accessory concentric vent kit.

Can this application use 2" (50 mm ND) PVC/ABS DWV vent piping?

Measure the required linear length of air inlet and vent pipe; insert the longest of the two here					70 ft. (22 M)	Use length of the longer of the vent or air inlet piping system
Add equiv length of (3) 90º long-radius elbows (use the highest number of elbows for either the vent or inlet pipe)	3	x	3 ft. (0.9 M)	=	9 ft. (2.7 M)	From Deductions from Maximum Equivalent Vent Length - Ft. (M) Table.
Add equiv length of (2) 45º long-radius elbows (use the highest number of elbows for either the vent or inlet pipe)	2	x	1.5 ft. (0.5 M)	=	3 ft. (0.9 M)	From Deductions from Maximum Equivalent Vent Length - Ft. (M) Table.
Add equiv length of factory concentric vent term					0 ft.	From Deductions from Maximum Equivalent Vent Length - Ft. (M) Table.
Add correction for flexible vent pipe, if any					0 ft.	From Vent Manufacturer's instructions; zero for PVC/ABS DWV
Total Equivalent Vent Length (TEVL)					82 ft. (25 M)	Add all of the above lines
Maximum Equivalent Vent Length (MEVL)					95 ft. (29 M)	For 2" pipe from Maximum Equivalent Vent Length Table.
Is TEVL less than MEVL?					YES	Therefore, 2" pipe MAY be used

Example 2

A direct-vent 60,000 BTUH furnace installed at 2100 ft. (640M). Venting system includes **FOR EACH PIPE:** 100 feet (30 M) of vent pipe, 95 feet (29 M) of combustion air inlet pipe, (3) 90º long-radius elbows, and a polypropylene concentric vent kit. Also includes 20 feet (6.1 M) of flexible polypropylene vent pipe, included within the 100 feet (30 M) of vent pipe.

VERIFY FROM POLYPROPYLENE VENT MANUFACTURER'S INSTRUCTIONS for the multiplier correction for flexible vent pipe.

Can this application use 60mm o.d. (2") polypropylene vent piping? If not, what size piping can be used?

Measure the required linear length of **RIGID** air inlet and vent pipe; insert the longest of the two here: 100 ft. Of rigid pipe - 20 ft. Of flexible pipe				=	80 ft. (24 M)	Use length of the longer of the vent or air inlet piping system
Add equiv length of (3) 90º long-radius elbows (use the highest number of elbows for either the vent or inlet pipe)	3	x	5 ft. (1.5 M)	=	15 ft. (4.6 M)	Example from polypropylene vent manufacturer's instructions, Verify from vent manufacturer's instructions.
Add equiv length of 45º long-radius elbows (use the highest number of elbows for either the vent or inlet pipe)	0	x		=	0 ft. (0 M)	
Add equiv length of factory concentric vent term	9	x	3.3 ft (0.9 M)	=	30 ft. (9 M)	
Add correction for flexible vent pipe, if any	2*	x	20 ft. (6.1 M)	=	40 ft. (12.2 M)	
* VERIFY FROM VENT MANUFACTURER'S INSTRUCTIONS; For example only, assume 1 meter of flexible 60mm (2") or 80mm (3") polypropylene pipe equals 2.0 meters (6.5 ft.) of PVC/ABS pipe.						
Total Equivalent Vent Length (TEVL)					165 ft. (50 M)	Add all of the above lines
Maximum Equivalent Vent Length (MEVL)					95 ft. (29 M)	For 2" pipe from Maximum Equivalent Vent Length Table.
Is TEVL less than MEVL?					NO	Therefore, 60mm (2") pipe may NOT be used; try 80mm (3")
Maximum Equivalent Vent Length (MEVL)					185 ft. (57 M)	For 3" pipe from Maximum Equivalent Vent Length Table.
Is TEVL less than MEVL?					YES	Therefore, 80mm (3") pipe MAY be used

RETURN AIR TEMPERATURE

This furnace is designed for continuous return-air minimum temperature of 60_F (15_C) db or intermittent operation down to 55_F (13_C) db such as when used with a night setback thermometer. Return-air temperature must not exceed 80_F (27_C) db. Failure to follow these return air limits may affect reliability of heat exchangers, motors and controls.

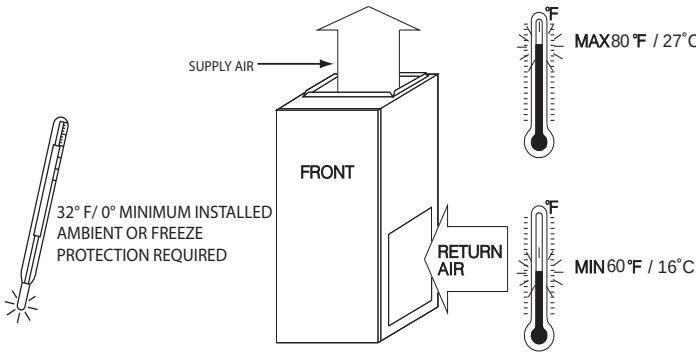

A10490

MINIMUM CLEARANCES TO COMBUSTIBLE MATERIALS

POSITION	CLEARANCE
Rear	0 (0 mm)
Front (Combustion air openings in furnace and in structure)	1 in. (25 mm)
Required for service*	24 in. (610 mm)†
All Sides of Supply Plenum*	1 in. (25 mm)
Sides	0 (0 mm)
Vent	0 (0 mm)
Top of Furnace	1 in. (25 mm)

*. Consult your local building codes
†. Recommended

COMBUSTION-AIR PIPE FOR NON-DIRECT (1-PIPE) VENT APPLICATION

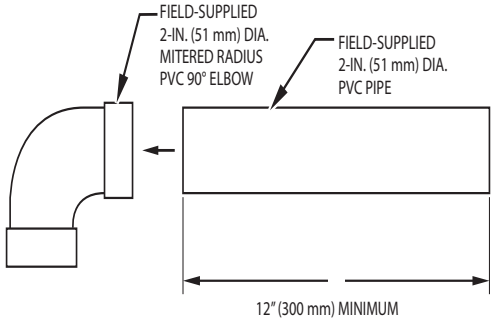

A12376

NOTE: See Installation Instructions for specific venting configurations.

DOWNFLOW SUBBASE

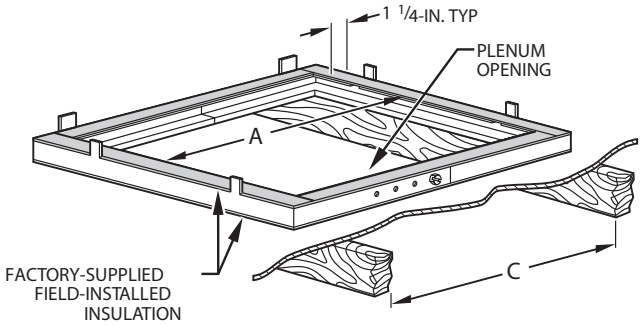

A97427

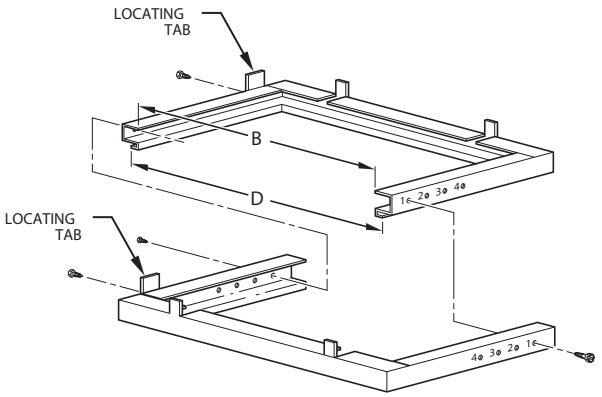

A88207

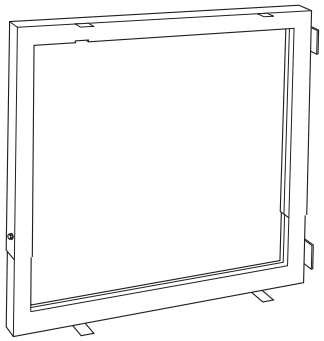

Downflow Subbase

A88202

One base fits all furnace sizes. The base is designed to be installed between the furnace and a combustible floor when no coil box is used or when a coil box other than a manufacturer's cased coil is used. It is CSA design certified for use with manufacturer's branded furnaces when installed in downflow applications.

DIMENSIONS (IN. / MM)						
FURNACE CASING WIDTH	FURNACE IN DOWNFLOW APPLICATION	PLENUM OPENING*		FLOOR OPENING		HOLE NO. FOR WIDTH ADJUSTMENT
		A	B	C	D	
14-3/16 (360)	Furnace with or without Cased Coil Assembly or Coil Box	11-3/16 (322)	19 (483)	13-7/16 (341)	20-5/8 (600)	4
17-1/2 (445)	Furnace with or without Cased Coil Assembly or Coil Box	15-1/8 (384)	19 (483)	16-3/4 (426)	20-5/8 (600)	3
21 (533)	Furnace with or without Cased Coil Assembly or Coil Box	18-5/8 (396)	19 (483)	20-1/4 (514)	20-5/8 (600)	2
24-1/2 (622)	Furnace with or without Cased Coil Assembly or Coil Box	22-1/8 (562)	19 (483)	23-3/4 (603)	20-5/8 (600)	1

*. The plenum should be constructed 1/4-in. (6 mm) smaller in width and depth than the plenum dimensions shown above.

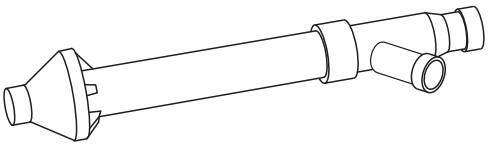

Concentric Vent Kit

A concentric vent kit allows vent and combustion-air pipes to terminate through a single exit in a roof or side wall. One pipe runs inside the other allowing venting through the inner pipe and combustion air to be drawn in through the outer pipe.

MEDIA FILTER CABINET (OPTIONAL ACCESSORY)

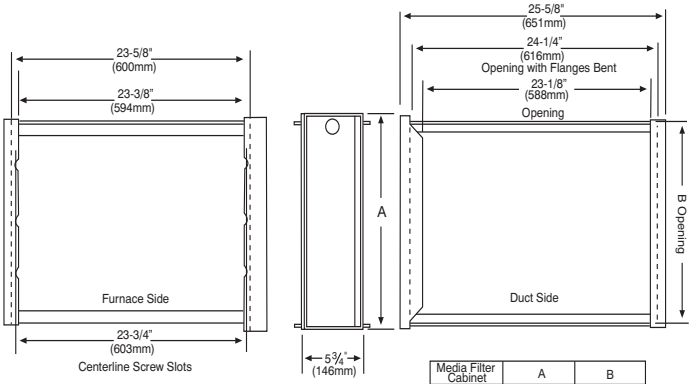

Media Filter Cabinet	A	B
16" (406mm)	17" (432mm)	16" (406mm)
20" (508mm)	21" (533mm)	20" (508mm)
24" (610mm)	25" (635mm)	24" (610mm)

NOTE: Media cabinet is matched to the bottom opening on furnace. May also be used for side return.

A12428

ACCESSORIES

PART NUMBER	DESCRIPTION	30026A	30040A	36040B	36060A	48060B
P908-0001*	Condensate Neutralizer Kit	X	X	X	X	X
92-1003*	Gas Valve Tower Port Adapter Kit	X	X	X	X	X
ACG1425NCB*	External Filter Rack, 14-1/2" x 25"	X	X	–	X	–
ACG1625NCF*	External Filter Rack, 16" x 25"	–	–	X	–	X
325531-402*	Washable filter, 3/4" x 16" x 25"	X	X	X	X	X
KGADA0101ALL	Coil Adapter Kits - No Offset	X	X	X	X	X
KGADA0201ALL	Coil Adapter Kits - Single Offset	X	X	X	X	X
KGADA0301ALL	Coil Adapter Kits - Double Offset	X	X	X	X	X
KGARP0301B14	Return Air Base (Upflow Applications) 14" wide	X	X	–	X	–
KGARP0301B17	Return Air Base (Upflow Applications) 17.5" wide	–	–	X	–	X
KGAVT0701CVT	Vent Terminal - Concentric - 2" (51 mm)	See Venting Tables				
KGAVT0801CVT	Vent Terminal - Concentric - 3" (76 mm)					
KGAVT0101BRA	Vent Terminal Bracket - 2" (51 mm)					
KGAVT0201BRA	Vent Terminal Bracket - 3" (76 mm)					
KGADC0101BVC	Vent Kit - Through the Cabinet	X	X	X	X	X
KGAAC0101RVC	Polypropylene Inlet Air Pipe Coupling	X	X	X	X	X
KGACK0101HCK	Horizontal Trap Grommet - Direct Vent	All 2-Pipe Horizontal				
KGAHT0101CFP	Freeze Protect Kit - Condensate Drain Line Tape	X	X	X	X	X
KGAHT0201CFP	Freeze Protect Kit - Condensate Trap with Heat Pad	X	X	X	X	X
KGAAD0110PVC	CPVC to PVC Drain Adapters - 1/2" CPVC to 3/4" PVC	X	X	X	X	X
KGAET0201ETK	External Trap Kit	X	X	X	X	X
KGASB0201ALL	Downflow Furnace Base Kit for Combustible Floors	X	X	X	X	X
KGAAD0101MEC	IAQ Device Duct Adapters 20" IAQ to 16" Side Return	20" x 25" IAQ Devices				
KGAAD0201MEC	IAQ Device Duct Adapters 24" IAQ to 16" Side Return	24" x 25" IAQ Devices				
AGAGCANPL01B	Gas Conversion Kit - Nat to LP†	X	–	–	–	–
AGAGCAPNL01B	Gas Conversion Kit - LP to Nat†	X	–	–	–	–
AGAGC9NPS01C*	Gas Conversion Kit - Nat to LP†	–	X	X	X	X
AGAGC9PNS01C*	Gas Conversion Kit - LP to Nat†	–	X	X	X	X
AGAGCAMHC01A	Manufactured Home Kit - Gas Conversion†	–	X	X	X	X
AGATWNDTE01C	Twinning Kit - (MCT) ECM Motor	–	–	–	–	X

*. Purchased through Replacement Components
†. Factory-authorized and field installed. Fuel conversion kits are CSA recognized.
X = Accessory

ACCESSORIES (continued)

PART NUMBER	DESCRIPTION	48080B	60080C	60100C	66120D	66140D
P908-0001*	Condensate Neutralizer Kit	X	X	X	X	X
92-1003*	Gas Valve Tower Port Adapter Kit	X	X	X	X	X
ACG1625NCF*	External Filter Rack, 16 x 25”	X	–	–	–	–
ACG2025NCJ*	External Filter Rack, 20 x 25”*	–	X	X	–	–
ACG2424NCL*	External Filter Rack, 24-1/2 x 24”*	–	–	–	X	X
325531-402	Washable filter, 3/4” x 16” x 25”*	X	–	–	–	–
325531-403	Washable filter, 3/4” x 20” x 25”*	–	X	X	–	–
325531-404	Washable filter, 3/4” x 24” x 25”*	–	–	–	X	X
KGADA0101ALL	Coil Adapter Kits - No Offset	X	X	X	X	X
KGADA0201ALL	Coil Adapter Kits - Single Offset	X	X	X	X	X
KGADA0301ALL	Coil Adapter Kits - Double Offset	X	X	X	X	X
KGARP0301B17	Return Air Base (Upflow Applications) 17-1/2” wide	X	–	–	–	–
KGARP0301B21	Return Air Base (Upflow Applications) 21” wide	–	X	X	–	–
KGARP0301B24	Return Air Base (Upflow Applications) 24-1/2 wide	–	–	–	X	X
KGAVT0701CVT	Vent Terminal - Concentric - 2” (51 mm)	See Venting Tables				
KGAVT0801CVT	Vent Terminal - Concentric - 3” (76 mm)					
KGAVT0101BRA	Vent Terminal Bracket - 2” (51 mm)					
KGAVT0201BRA	Vent Terminal Bracket - 3” (76 mm)					
KGADC0101BVC	Vent Kit - Through the Cabinet for HZ left/right ONLY	X	X	X	X	X
KGAAC0101RVC	Polypropylene Inlet Air Pipe Coupling	X	X	X	X	X
KGACK0101HCK	Horizontal Trap Grommet - Direct Vent	All 2-Pipe Horizontal				
KGAHT0101CFP	Freeze Protect Kit - Condensate Drain Line Tape	X	X	X	X	X
KGAHT0201CFP	Freeze Protect Kit - Condensate Trap with Heat Pad	X	X	X	X	X
KGAAD0110PVC	CPVC to PVC Drain Adapters - 1/2” CPVC to 3/4” PVC	X	X	X	X	X
KGAET0201ETK	External Trap Kit	X	X	X	X	X
KGASB0201ALL	Downflow Furnace Base Kit for Combustible Floors	X	X	X	X	X
KGAAD0101MEC	IAQ Device Duct Adapters 20” IAQ to 16” Side Return	20”x25” IAQ Devices				
KGAAD0201MEC	IAQ Device Duct Adapters 24” IAQ to 16” Side Return	24”x25” IAQ Devices				
AGAGC9NPS01C*	Gas Conversion Kit - Nat to LP†	X	X	X	X	X
AGAGC9PNS01C*	Gas Conversion Kit - LP to Nat†	X	X	X	X	X
AGAGCAMHC01A	Manufactured Home Kit - Gas Conversion†	X	X	X	X	–
AGATWNDTE01C	Twinning Kit - (MCT) ECM Motor	X	X	X	X	X

*. Purchased through Replacement Components
†. Factory-authorized and field installed. Fuel conversion kits are CSA (formerly AGA/CGA) recognized.
X = Accessory

DESCRIPTION		
Gas Orifice Kit - #42 (Nat Gas)	LH32DB207	See Installation Instructions for model, altitude, and heat value usages.
Gas Orifice Kit - #43 (Nat Gas)	LH32DB202	
Gas Orifice Kit - #44 (Nat Gas)	LH32DB200	
Gas Orifice Kit - #45 (Nat Gas)	LH32DB205	
Gas Orifice Kit - #46 (Nat Gas)	LH32DB208	
Gas Orifice Kit - #47 (Nat Gas)	LH32DB078	
Gas Orifice Kit - #48 (Nat Gas)	LH32DB076	
Gas Orifice Kit - #54 (LP)	LH32DB203	
Gas Orifice Kit - #55 (LP)	LH32DB201	
Gas Orifice Kit - #56 (LP)	LH32DB206	
Gas Orifice Kit - 1.25mm (LP)	LH32DB209	
Gas Orifice Kit - 1.30mm (LP)	LH32DB210	

ACCESSORIES (continued)

DESCRIPTION	ACCESSORY	14”	17”	21”	24”
Cartridge Media Filter - 16" (407 mm) (MERV 11)	FILXXCAR0116	X	X	–	–
Cartridge Media Filter - 16" (407 mm) (MERV 8)	FILXXCAR0016	X	X	–	–
Cartridge Media Filter - 20" (508 mm) (MERV 8)	FILXXCAR0020	–	–	X	–
Cartridge Media Filter - 20" (508 mm) (MERV11)	FILXXCAR0120	–	–	X	–
Cartridge Media Filter - 24" (610 mm) (MERV 8)	FILXXCAR0024	–	–	–	X
Cartridge Media Filter - 24" (610 mm) (MERV11)	FILXXCAR0124	–	–	–	X
EZ Flex Cabinet Side or Bottom - 16"	EZXCAB--0016	X	X	–	–
EZ Flex Cabinet Side or Bottom - 20"	EZXCAB--0020	–	–	X	X
EZ Flex Replacement Filters 16" MERV 10	EXPXXFIL0016	X	X	–	–
EZ Flex Replacement Filters 16" MERV 13	EXPXXFIL0316	X	X	–	–
EZ Flex Replacement Filters 20" MERV 10	EXPXXFIL0020	–	–	X	–
EZ Flex Replacement Filters 20" MERV 13	EXPXXFIL0320	–	–	X	–
EZ Flex Replacement Filters 24" MERV 10	EXPXXFIL0024	–	–	–	X
EZ Flex Replacement Filters 24" MERV 13	EXPXXFIL0324	–	–	–	X
EZ-Flex Filter with End Caps - 16" (407 mm) (MERV 10)	EXPXXUNV0016	X	X	–	–
EZ-Flex Filter with End Caps - 16" (407 mm) (MERV 13)	EXPXXUNV0316	X	X	–	–
EZ-Flex Filter with End Caps - 20" (508 mm) (MERV 10)	EXPXXUNV0020	–	–	X	–
EZ-Flex Filter with End Caps - 20" (508 mm) (MERV 13)	EXPXXUNV0320	–	–	X	–
EZ-Flex Filter with End Caps - 24" (610 mm) (MERV 10)	EXPXXUNV0024	–	–	–	X
EZ-Flex Filter with End Caps - 24" (610 mm) (MERV 13)	EXPXXUNV0324	–	–	–	X
Media Filter Cabinet - 20"	FILCABXL0020	–	–	X	–
Media Filter Cabinet - 24"	FILCABXL0024	–	–	–	X
Media Filter Cabinet - 16"	FILCABXL0016	X	X	–	–

© 2025 Carrier. All rights reserved.

Manufacturer reserves the right to change, at any time, specifications and designs without notice and withou3 obligations.