PA5Z
Single-Packaged Air Conditioner System with R-454B Refrigerant Single Phase 2 to 5 Nominal Tons (Sizes 024-060)

Product Data

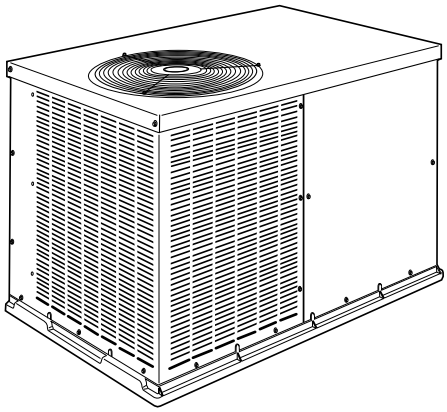

PA5Z 024-048

A10165

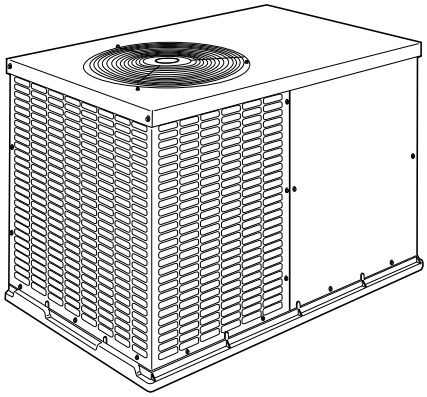

PA5Z 060

A150067

Fig. 1 – Unit PA5Z

Features/Benefits

This unit is a packaged air conditioner for manufactured housing, residential, and light commercial applications. The unit design is the result of our firm commitment to the development of the finest air conditioners that modern technology can offer.

The unit is built in one basic cabinet size and features a round or rectangular side-by-side duct configuration.

R-454B is the latest choice of refrigerant to help meet the 2025 GWP requirement. This unit is designed and tested with R-454B and contains a dissipation system.

FACTORY-ASSEMBLED PACKAGE is a compact, fully self-contained, electric cooling unit with horizontal supply and return ducts. The unit is available in a variety of standard cooling sizes to meet residential and light commercial requirements. Unit installs easily on a ground level pad.

EASY TO INSTALL - The unit is small, compact, and easy to handle. Every unit has an identical 32 x 51-in. (813 x 1295 mm) footprint to make planning simple. The concise design uses less sheet metal and makes the unit lighter than other units. The unit can be easily positioned on the job site with the hand holds built into the unit basepan.

AERODYNAMIC FAN BLADE DESIGN reduces the overall sound now as low as 70dBA.

SERVICE ACCESS makes installation and maintenance quicker and easier. This unit is designed to be serviced from both the side and front. The design allows easy access for installation and maintenance procedures on the unit. Routine maintenance tasks such as coil cleaning are sped up with the multiple access side panels.

NO-RUST BASEPAN WITH INTEGRATED DRAIN PAN is standard on all units. The unit features a tough, hightech, composite material basepan with integrated drain pan. The composite material eliminates the potential problems of rust and premature replacement which are common with standard metal basepans.

DURABLE PRE-PAINTED STEEL CABINET protects against harsh weather. The watertight construction and corrosion-resistant finish will keep it looking like new for years. The paint treatment process ensures quality protection against the elements. A compact, low-profile design utilizes a louvered coil enclosure for protection against vandalism and hail damage.

INDOOR AIR QUALITY is designed into the unit. A sloped drain pan minimizes the amount of standing water inside the unit, which limits mold and mildew growth. The drain pan is made of a rust-proof material and will not deteriorate or release foreign matter into the airstream.

LIGHTWEIGHT, COMPACT CONSTRUCTION is ideal for manufactured housing and residential applications. This unit is one of the lightest, most compact packaged units ever designed. It's light weight (244 lb [111 kg] for the 024 size) makes the unit easier to handle. The low height keeps ductwork connections to a minimum and makes units less visible.

This unit utilizes a structural beam design to form the four sides of the cabinet. Only 12 different pieces of sheet metal are used in the unit construction to simplify the unit for greater reliability.

EFFICIENT, DEPENDABLE PERFORMANCE with durable compressors designed for efficiency. The unit offers up to 13.4 SEER2 (Seasonal Energy Efficiency Ratio) cooling performance efficiencies. This performance level can reduce cooling expenses by as much as 30% compared to older cooling equipment.

DURABLE, DEPENDABLE, COMPRESSORS are designed for high efficiency. Each compressor is hermetically sealed against contamination to help promote longer life and dependable operation. Vibration isolation provides quiet operation. Compressors have internal overcurrent protection.

DIRECT-DRIVE MULTISPEED, BLOWER MOTOR is standard on all models. It's high efficiency design ensures high performance with most duct systems.

DIRECT-DRIVE, PSC CONDENSER-FAN MOTORS are designed to help reduce energy consumption and provide for cooling operation down to 40°F (4.4°C).

REFRIGERANT SYSTEM is designed to provide dependability. Liquid refrigerant filter driers are used to promote clean, unrestricted

operation. Each unit leaves the factory with non-ozone depleting and low global warming potential R-454B refrigerant charge. Refrigerant service connections make checking operating pressures easier. Factory-installed leak detection dissipation system for added safety.

AIR HANDLING LEAKAGE —Cabinet air leakage less than 2.0% at 1.0 in. W.C. and cabinet air leakage less than 1.4% at 0.5 in W.C. when tested in accordance with ASHRAE standard 193

ACCESSORY ELECTRIC HEATERS — A variety of accessory electric heaters are available. These heaters are comprised of a separate heater module mounted on the blower inlet and remote mounted controls located in the unit control box. Single point electrical connections are available for powering both the heater and the unit.

Limited Warranty*

• Default 5 year parts limited warranty

-10 year parts limited warranty with timely registration. Equipment must be registered within 90 days of original installation, except in jurisdictions where warranty benefits cannot be conditioned on registration.

* Applies to original purchaser/homeowner and 5 years to subsequent owners.

• Default 5 year on compressor limited warranty

-10-year on compressor limited warranty with timely registration. Equipment must be registered within 90 days of original installation, except in jurisdictions where warranty benefits cannot be conditioned on registration.

* Applies to original purchaser/homeowner and 5 years to subsequent owners. See warranty certificate for complete details and restrictions

Table of Contents

Features/Benefits 1
Model Nomenclature 2
AHRI Capacity Ratings 3
A-Weighted Sound Power Level (dBA) 3
Physical Data 3
Accessories 4
Dimensional Drawing 5
Dimensional Drawings 6
Dimensional Drawings 7
Selection Procedure 8
Wet Coil Air Delivery 13
Typical Connection Wiring Schematic 14
Electrical Data 17
Operating Sequence 18
Application Data 18
Guide Specifications 19

Model Nomenclature

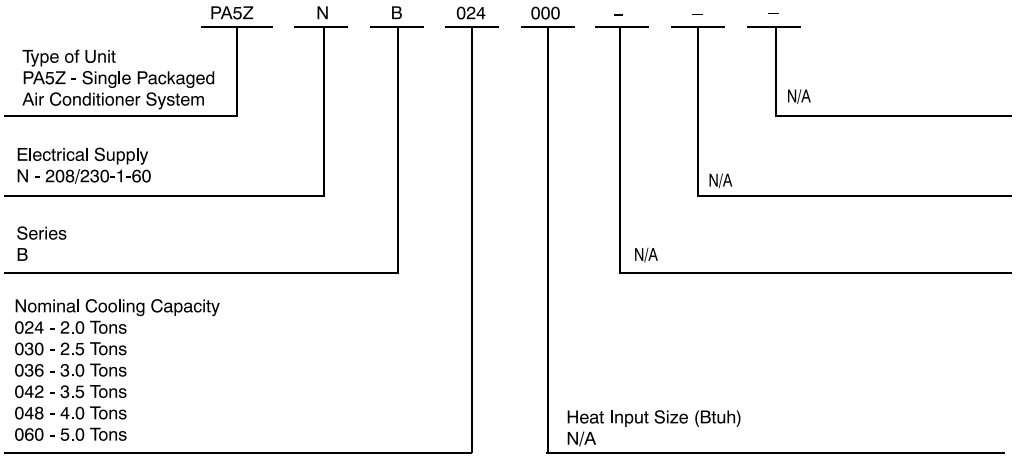

Use of the AHRI Certified TM Mark indicates a manufacturer's participation in the program For verification of certification for individual products, go to www.ahridirectory.org.

SAP ORDERING NO.	NOMINAL COOLING CAPACITY (Btuh)	VOLTS-PHASE (60 HZ)	APPROX SHIP WT (LB)
PA5ZNB024000	24,000	208/230-1-60	294
PA5ZNB030000	30,000	208/230-1-60	299
PA5ZNB036000	36,000	208/230-1-60	318
PA5ZNB042000	42,000	208/230-1-60	342
PA5ZNB048000	48,000	208/230-1-60	394
PA5ZNB060000	60,000	208/230-1-60	409

AHRI* Capacity Ratings

Cooling Capacities and Efficiencies

UNIT SIZE	NOMINAL TONS	STANDARD CFM	Ratings in accordance with U.S. Government DOE (Department of Energy) Appendix M1 test procedures and/or AHRI Standards 210/240		
			NET COOLING CAPACITY (Btuh)†	EER2†	SEER2
24	2	800	23,000	11.05	13.4
30	2.5	1000	28,600	11.05	13.4
36	3	1200	33,400	11.05	13.4
42	3.5	1400	41,000	11.05	13.4
48	4	1600	47,000	11.05	13.4
60	5	1850	54,500	11.05	13.4

*. Air Conditioning Heating & Refrigeration Institute
†. At "A" conditions -- 80°F (26.7°C) indoor db / 67°F (19.4°C) indoor wb & 95°F (35°C) outdoor db.
Notes:
1. Ratings are net values, reflecting the effects of circulating fan heat.
2. Before purchasing this appliance, read important energy cost and efficiency information available from your retailer.

A-Weighted Sound Power Level (dBA)

UNIT SIZE	STANDARD RATING (dBA)	TYPICAL OCTAVE BAND SPECTRUM (dBA without tone adjustment)						
		125	250	500	1000	2000	4000	8000
24	70	56	60	63	67	59	53	44
30	70	60	61	63	65	60	56	50
36	76	63	67	70	72	65	60	53
42	77	65	70	72	72	67	62	53
48	78	65	69	72	74	68	63	53
60	80	67	69	74	76	73	67	59

NOTE: Tested in compliance with AHRI 270 but not listed with AHRI.

Physical Data

UNIT SIZE	024	030	036	042	048	060
NOMINAL CAPACITY (ton)	2	2.5	3	3.5	4	5
SHIPPING WEIGHT (lb) (kg)	294 133	299 136	318 144	342 155	394 179	409 186
COMPRESSOR TYPE	SCROLL					
REFRIGERANT	R-454B					
REFRIGERANT QUANTITY (lb) (kg)	3.00 1.36	3.50 1.59	4.44 2.01	4.60 2.09	5.00 2.27	7.00 3.18
METERING DEVICE ID	TXV	Piston				TXV
ORIFICE OD (in.) (mm)	N/A	.061 1.55	.063 1.60	.067 1.70	.078 1.98	N/A
MINIMUM CONDITIONED SPACE AREA (sq. ft)	61	61	76	76	76	106
OUTDOOR COIL ROWS...FINS/in. FACE AREA (sq. ft)	 1...20 9.1	 1...20 9.1	 2...20 9.1	 2...20 10.2	 2...20 13.0	 2...20 15.5
OUTDOOR FAN NOMINAL AIRFLOW (CFM) DIAMETER (in.) DIAMETER (mm) MOTOR HP (RPM)	 2400 20 508 1/8 (825)	 2400 20 508 1/8 (825)	 2700 20 508 1/4 (1100)	 2700 20 508 1/4 (1100)	 2700 20 508 1/4 (1100)	 3000 20 508 1/3 (1110)
REQUIRED MINIMUM DISSIPATION AIRFLOW (CFM)	133	133	133	133	133	186
INDOOR COIL ROWS...FINS/in. FACE AREA (sq. ft)	 2...12 4.3	 3...15 4.3	 3...12 4.3	 3...12 4.9	 3...15 4.9	 3...15 6.1
INDOOR BLOWER NOMINAL COOLING AIRFLOW (CFM) NOMINAL SIZE D x W (in.) (mm) MOTOR (HP)	 800 11 x 8 279 x 203 1/3	 1000 11 x 8 279 x 203 1/2	 1200 12 x 9 304 x 229 1/2	 1400 12 x 9 304 x 229 1/2	 1600 12 x 11 304 x 279 3/4	 1850 12 x 11 304 x 279 1
HIGH-PRESSURE SWITCH (psig) CUTOUT RESET (AUTO)	 650 +/- 15 420 +/- 25					
RETURN-AIR FILTERS* THROWAWAY (in.) (mm)	 20x20x1 508x508x25	 20x24x1 508x610x25	 24x30x1 610x762x25		 24x36x1 610x914x25	

*. *Required filter sizes shown are based on the AHRI (Air Conditioning, Heating and Refrigeration Institute) rated airflow at a velocity of 300 ft/min for throwaway type or 450 ft/min for high capacity type. Recommended filters are 1-in. (25.4 mm) thick.

Manufacturer reserves the right to change, at any time, specifications and designs without notice and without obligations.

Accessories

AREA	DESCRIPTION	PART NO.	USED WITH
AC Accessories	240V Crankcase Heater (Factory-Installed on 208/230 VAC-3 phase units)	CPCRKHTR008A00	24-42
		CPCRKHTR004A00	48-60
	Low Ambient Control (Pressure Switch)	KSALA0301410	All
	Low Pressure Switch	CPLPSCTL001A00	All
	Time Guard II (5 minute compressor delay anti-short cycle protection. Some non-corporate thermostats do not have short cycle protection, for which use of this accessory is recommended.)	CRTIMEGD001A00	All
	PTC Compressor Start Assist Kit	CPHSTART002A00	All
Electric Heat Kits	**ELECTRIC HEATERS (208/230 VAC -SINGLE PHASE 60 Hz)**		
	NOMINAL CAPACITY (kW)	**CIRCUIT BREAKER**	**PART NO.**	**USED WITH**
	5.0	No	CPHEATER125A0*	All
	5.0	Yes	CPHEATER126A0*	All
	7.5	No	CPHEATER127A0*	All
	7.5	Yes	CPHEATER128A0*	All
	10.0	No	CPHEATER129A0*	24-48
	10.0	Yes	CPHEATER130A0*	All
	15.0	Yes	CPHEATER131A0*	36-60
	20.0	Yes	CPHEATER132A0*	48-60

* May be any character
Note: Thermostat used must energize fan "G" on a call for heat "W".

Multiplication Factors

HEATER kW RATING	VOLTAGE DISTRIBUTION	MULTIPLICATION FACTOR
240	200	.69
	208	.75
	230	.92
	240	1.00

Example: 15.0 kW (at 240v) heater on 208v
= 15.0 (.75 mult factor)
= 11.25 capacity at 208v

Manufacturer reserves the right to change, at any time, specifications and designs without notice and without obligations.

Dimensional Drawing

024-036

COOLING CAPACITY	UNIT WT.		UNIT HEIGHT	CENTER OF GRAVITY IN [MM]		
	LBS.	KG.	A	X	Y	Z
24	244	111	30-1/8 [765]	14 [356]	19 [483]	14 [356]
30	249	113	30-1/8 [765]	14 [356]	19 [483]	14 [356]
36	268	122	30-1/8 [765]	14 [356]	19 [483]	14 [356]

REQUIRED CLEARANCES TO COMBUSTIBLE MATL. INCHES [MM]

TOP OF UNIT.....0
BOTTOM OF UNIT.....0
SIDE OF UNIT WITH DUCT OPENINGS.....0
SIDE OF UNIT OPPOSITE DUCT OPENINGS.....0

NEC. REQUIRED CLEARANCES. INCHES [MM]

BETWEEN UNITS, POWER ENTRY SIDE.....42.0 [1067]
UNIT AND UNGROUNDED SURFACES, POWER ENTRY SIDE.....36.0 [914]
UNIT AND BLOCK OR CONCRETE WALLS AND OTHER GROUNDED SURFACES, POWER ENTRY SIDE.....42.0 [1067]

REQUIRED CLEARANCE FOR SERVICING INCHES [MM]

TOP OF UNIT.....36.0 [914]
SIDE OF UNIT OPPOSITE DUCT OPENINGS.....30.0 [762]
SIDE OF UNIT WITH POWER ENTRY.....30.0 [762]
(EXCEPT FOR NEC REQUIREMENTS)

NOTE: CLEARANCES MUST BE MAINTAINED TO PREVENT RECIRCULATION OF AIR FROM OUTDOOR FAN DISCHARGE. A REMOVABLE FENCE OR BARRICADE REQUIRES NO CLEARANCE.

DIMENSIONS IN [] ARE IN MM

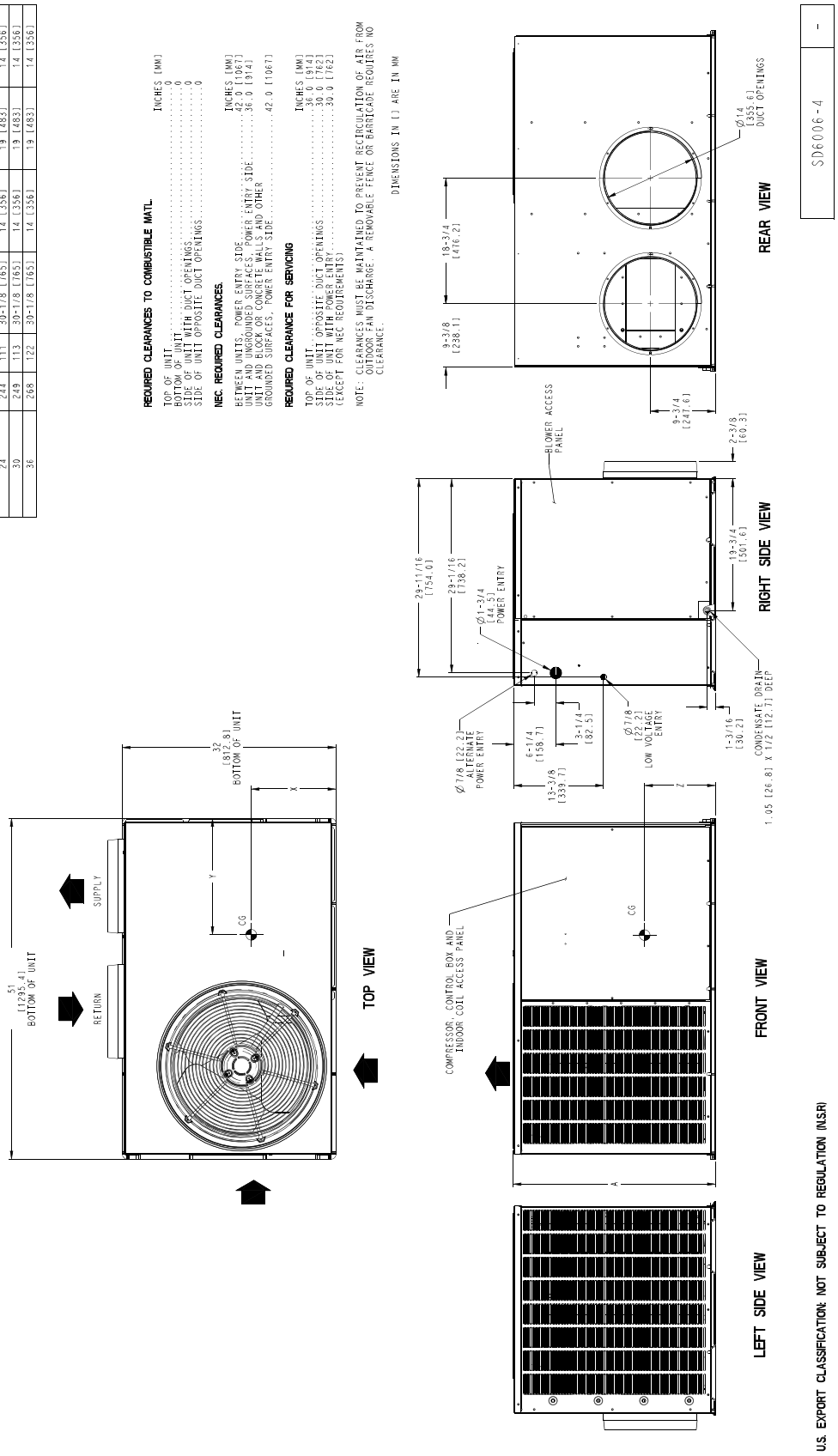

A240270

Dimensional Drawings

042-048

COOLING CAPACITY	UNIT WT		UNIT HEIGHT	CENTER OF GRAVITY IN [MM]		
	LBS.	KG.	A	X	Y	Z
42	292	132	34-1/8 [867]	14 [356]	19 [483]	16 [406]
48	344	156	42-1/8 [1070]	14 [356]	19 [483]	19-3/4 [503]

REQUIRED CLEARANCES TO COMBUSTIBLE MATL.

	INCHES [MM]
TOP OF UNIT	0
BOTTOM OF UNIT	0
SIDE OF UNIT WITH DUCT OPENINGS	0
SIDE OF UNIT OPPOSITE DUCT OPENINGS	0

NEC. REQUIRED CLEARANCES.

	INCHES [MM]
BETWEEN UNITS, POWER ENTRY SIDE	42.0 [1067]
UNIT AND UNGROUNDED SURFACES, POWER ENTRY SIDE	36.0 [914]
UNIT AND BLOCK OR CONCRETE WALLS AND OTHER GROUNDED SURFACES, POWER ENTRY SIDE	42.0 [1067]

REQUIRED CLEARANCE FOR SERVICING

	INCHES [MM]
TOP OF UNIT	36.0 [914]
SIDE OF UNIT OPPOSITE DUCT OPENINGS	30.0 [762]
SIDE OF UNIT WITH POWER ENTRY (EXCEPT FOR NEC REQUIREMENTS)	30.0 [762]

NOTE: CLEARANCES MUST BE MAINTAINED TO PREVENT RECIRCULATION OF AIR FROM OUTDOOR FAN DISCHARGE. A REMOVABLE FENCE OR BARRICADE REQUIRES NO CLEARANCE.

DIMENSIONS IN [ ] ARE IN MM

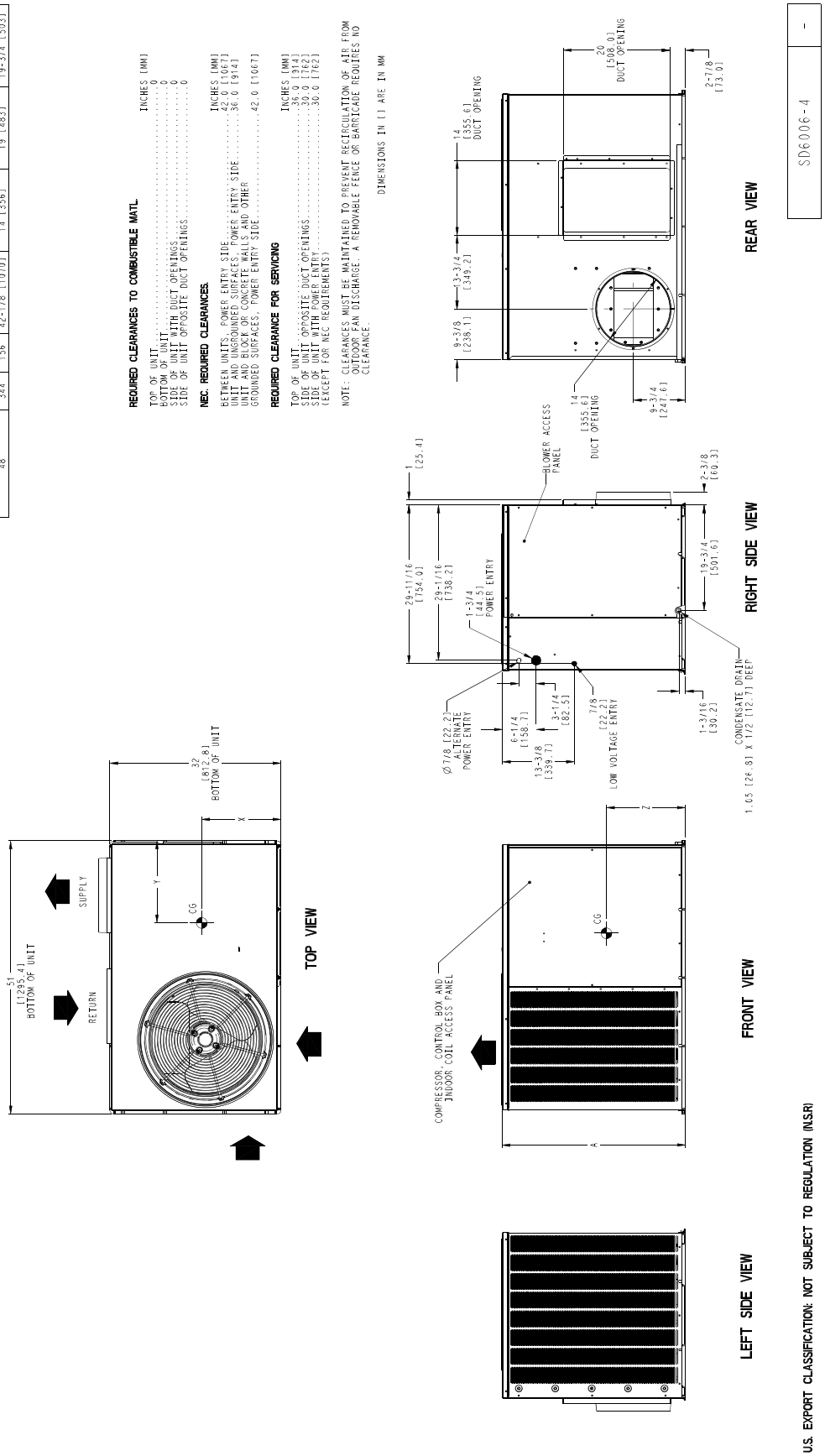

U.S. EXPORT CLASSIFICATION: NOT SUBJECT TO REGULATION (NSR)

A240271

Dimensional Drawings

060

COOLING CAPACITY	UNIT WT.		UNIT HEIGHT	CENTER OF GRAVITY IN [MM]		
				X	Y	Z
60	339	163	42-1/8 [1070]	14 [356]	19 [483]	19-3/4 [503]

REQUIRED CLEARANCES TO COMBUSTIBLE MATL.

	INCHES [MM]
TOP OF UNIT	0
BOTTOM OF UNIT	0
SIDE OF UNIT WITH DUCT OPENINGS	0
SIDE OF UNIT OPPOSITE DUCT OPENINGS	0

NEC REQUIRED CLEARANCES.

	INCHES [MM]
BETWEEN UNITS, POWER ENTRY SIDE	42.0 [1067]
UNIT AND UNGROUNDED SURFACES, POWER ENTRY SIDE	36.0 [914]
UNIT AND BLOCK OR CONCRETE WALLS AND OTHER GROUNDED SURFACES, POWER ENTRY SIDE	42.0 [1067]

REQUIRED CLEARANCE FOR SERVICING

	INCHES [MM]
TOP OF UNIT	36.0 [914]
SIDE OF UNIT OPPOSITE DUCT OPENINGS	30.0 [762]
SIDE OF UNIT WITH POWER ENTRY (EXCEPT FOR NEC REQUIREMENTS)	30.0 [762]

NOTE: CLEARANCES MUST BE MAINTAINED TO PREVENT RECIRCULATION OF AIR FROM OUTDOOR FAN DISCHARGE. A REMOVABLE FENCE OR BARRICADE REQUIRES NO CLEARANCE.

DIMENSIONS IN [] ARE IN MM

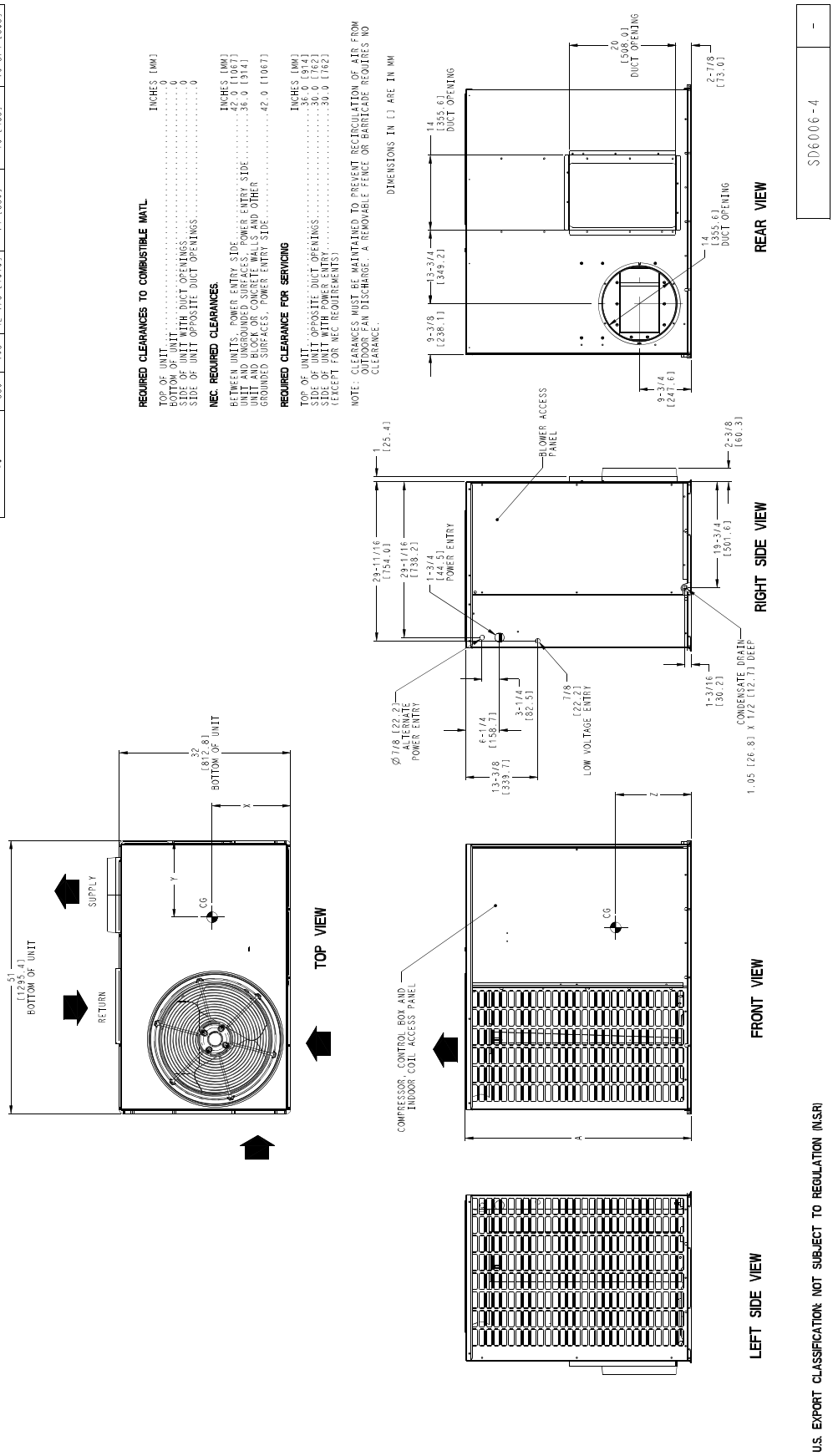

U.S. EXPORT CLASSIFICATION: NOT SUBJECT TO REGULATION (N.S.R)

A240272

Selection Procedure

DETERMINE COOLING AND HEATING REQUIREMENTS AT DESIGN CONDITIONS.

Given:

Required Cooling Capacity (TC) ..... 33,000 Btuh
Sensible Heat Capacity (SHC) ..... 25,000 Btuh
Required Heating Capacity ..... 15,000 Btuh
Outdoor Entering-Air Temperature ..... 95°F (35°C)
Indoor Entering-Air Temperature ..... 80°F edb (26.7°C); 67°F (19.4°C) ewb
Indoor-Air Quantity ..... 1200 CFM
External Static Pressure ..... 0.20 IN. W.C.
Electrical Characteristics (V-Ph-Hz) 230-1-60
Filter Size ..... 20x24x1-in.

edb - Entering Dry Bulb
CFM - Cubic Feet per Minute

SELECT UNIT BASED ON REQUIRED COOLING CAPACITY (3-TON EXAMPLE)

Enter Cooling Capacities table at condenser entering temperature of 95°F (35°C), indoor air entering at 1200 CFM and 67°F (19.4°C) ewb. The 036 unit provides a total cooling capacity of 33,500 Btuh and a sensible heat capacity of 25,800 Btuh.

For indoor-air temperature other than 80°F (26.7°C) edb, calculate sensible heat capacity correction, as required, using the formula found following the Cooling Capacities tables.

NOTE: Unit ratings are net capacities.

SELECT ELECTRIC HEAT

The required heating capacity is 15,000 Btuh (given). Determine the electric heat capacity in kW.

$$\frac{15{,}000 \text{ Btuh}}{3414 \text{ Btuh/kW}} = 3.8 \text{ kW of heat required}$$

Enter the Accessory Electric Heater table on page 4 for 208/230, single-phase, 036 unit. The 5-kW heater at 240v most closely satisfies the heating required. To calculate kW at 230 V, multiply the heater kW by multiplication factor 0.92 found in the Multiplication Factors table on page 4.

5 kW x 0.92 = 4.6 kW
4.6 kW x 3414 Btuh/kW = 15,704 Btuh

DETERMINE FAN SPEED AND POWER REQUIREMENTS AT DESIGN CONDITIONS.

Before entering the air delivery tables, calculate the total static pressure required. From the given, Filter Pressure Drop table, and the Accessory Electric Heat Pressure Drop table find:

External static pressure	0.20 IN. W.C.
Filter	0.13 IN. W.C.
Electric Heat	0.04 IN. W.C.
Total static pressure	0.37 IN. W.C.

Enter the table for Dry Coil Air Delivery — Horizontal Discharge. At 0.4 IN. W.C. external static pressure and red speed, the motor delivers 1290 CFM.

Manufacturer reserves the right to change, at any time, specifications and designs without notice and without obligations.

Performance Data

Cooling Capacities

024

EVAPORATOR AIR		CONDENSER ENTERING AIR TEMPERATURES °F (°C)																	
		75 (23.9)			85 (29.4)			95 (35)			105 (40.6)			115 (46.1)			125 (51.7)		
CFM / BF	EWB	Capacity MBtuh		Total System KW	Capacity MBtuh		Total System KW	Capacity MBtuh		Total System KW	Capacity MBtuh		Total System KW	Capacity MBtuh		Total System KW	Capacity MBtuh		Total System KW
		Total	Sens		Total	Sens		Total	Sens		Total	Sens		Total	Sens		Total	Sens	
700 / .09	57 (13.9)	22.2	22.2	1.6	21.5	21.5	1.8	20.4	20.4	2.0	17.8	17.8	2.2	15.6	15.6	2.4	13.2	13.2	2.7
	62 (16.7)	23.1	21.3	1.6	22.0	20.7	1.8	21.0	19.6	2.0	18.3	17.4	2.2	16.0	15.8	2.4	13.5	13.3	2.7
	63 (17.2)*	23.5	17.1	1.6	22.5	16.6	1.8	21.2	16.0	2.0	18.3	14.7	2.2	15.8	14.1	2.4	13.0	12.7	2.7
	67 (19.4)	25.3	17.9	1.6	24.2	17.3	1.8	22.8	16.7	2.0	20.3	15.4	2.2	17.8	14.7	2.4	14.8	13.2	2.7
	72 (22.2)	27.6	14.3	1.7	26.4	13.7	1.8	24.9	13.1	2.0	21.5	12.0	2.2	18.7	11.3	2.5	15.4	10.0	2.8
800 / .10	57 (13.9)	23.3	23.0	1.7	22.5	21.7	1.8	21.4	20.4	2.0	18.7	18.0	2.3	16.4	16.4	2.5	13.8	13.8	2.8
	62 (16.7)	23.6	22.1	1.7	22.5	21.5	1.8	21.5	20.4	2.0	18.7	18.0	2.3	16.4	16.4	2.5	13.8	13.8	2.8
	63 (17.2*	23.8	17.8	1.7	22.7	17.2	1.8	21.5	16.7	2.0	18.5	15.3	2.3	16.0	14.7	2.5	13.2	13.2	2.8
	67 (19.4)	25.6	18.6	1.7	24.5	18.0	1.8	23.1	17.3	2.0	20.5	16.0	2.3	18.0	15.3	2.5	15.0	13.7	2.8
	72 (22.2)	27.9	14.8	1.7	26.7	14.2	1.8	25.2	13.7	2.1	21.8	12.4	2.3	18.9	11.8	2.5	15.6	10.4	2.8
900 / .12	57 (13.9)	24.1	24.1	1.7	23.3	23.2	1.8	22.2	21.8	2.0	19.3	19.3	2.3	16.9	16.9	2.5	14.3	14.3	2.8
	62 (16.7)	24.4	23.9	1.7	23.3	23.0	1.8	22.2	21.8	2.0	19.3	19.3	2.3	16.9	16.9	2.5	14.3	14.3	2.8
	63 (17.2)*	24.6	19.0	1.7	23.5	18.4	1.8	22.2	17.8	2.0	19.1	16.4	2.3	16.6	15.7	2.5	13.7	13.7	2.8
	67 (19.4)	26.5	19.8	1.7	25.3	19.2	1.9	23.9	18.5	2.1	21.3	17.1	2.3	18.6	16.3	2.5	15.5	14.6	2.8
	72 (22.2)	28.9	15.9	1.7	27.6	15.2	1.9	26.1	14.6	2.1	22.5	13.3	2.3	19.6	12.6	2.5	16.1	11.1	2.8

See Legend and Notes on page 12.

030

EVAPORATOR AIR		CONDENSER ENTERING AIR TEMPERATURES °F (°C)																	
		75 (23.9)			85 (29.4)			95 (35)			105 (40.6)			115 (46.1)			125 (51.7)		
CFM / BF	EWB	Capacity MBtuh		Total System KW	Capacity MBtuh		Total System KW	Capacity MBtuh		Total System KW	Capacity MBtuh		Total System KW	Capacity MBtuh		Total System KW	Capacity MBtuh		Total System KW
		Total	Sens		Total	Sens		Total	Sens		Total	Sens		Total	Sens		Total	Sens	
875 / .09	57 (13.9)	27.6	27.6	2.0	26.6	26.6	2.2	25.3	25.3	2.4	22.3	22.3	2.7	20.1	20.1	2.9	18.6	18.6	3.2
	62 (16.7)	28.6	27.8	2.0	27.3	26.8	2.2	26.1	25.6	2.4	23.0	22.5	2.7	20.7	20.3	2.9	19.1	18.8	3.2
	63 (17.2)*	29.2	22.4	2.0	27.9	21.7	2.2	26.3	20.9	2.4	22.9	19.7	2.7	20.4	19.3	2.9	18.5	18.0	3.2
	67 (19.4)	31.4	23.3	2.0	30.0	22.6	2.2	28.3	21.8	2.5	25.7	20.7	2.7	23.2	20.1	2.9	21.2	19.2	3.2
	72 (22.2)	34.2	18.7	2.0	32.7	17.8	2.2	30.9	17.2	2.5	27.0	16.0	2.7	24.1	15.5	2.9	21.8	14.4	3.2
1000 / .10	57 (13.9)	28.9	28.9	2.0	27.9	27.9	2.2	26.6	26.6	2.5	23.4	23.4	2.7	21.1	21.1	3.0	19.5	19.5	3.2
	62 (16.7)	29.2	28.9	2.0	27.9	27.9	2.2	26.6	26.6	2.5	23.4	23.4	2.7	21.1	21.1	3.0	19.5	19.5	3.2
	63 (17.2)*	29.5	23.3	2.0	28.2	22.5	2.2	26.6	21.8	2.5	23.2	20.5	2.7	20.6	20.0	3.0	18.7	18.7	3.2
	67 (19.4)	31.7	24.3	2.1	30.3	23.5	2.3	28.6	22.7	2.5	26.0	21.5	2.7	23.5	20.9	3.0	21.5	19.9	3.2
	72 (22.2)	34.6	19.4	2.1	33.0	18.5	2.3	31.3	17.8	2.5	27.3	16.6	2.7	24.4	16.1	3.0	22.1	15.0	3.2
1125 / .12	57 (13.9)	29.9	29.9	2.1	28.9	28.9	2.3	27.5	27.5	2.5	24.2	24.2	2.7	21.8	21.8	3.0	20.2	20.2	3.2
	62 (16.7)	30.2	30.2	2.1	28.9	28.9	2.3	27.5	27.5	2.5	24.2	24.2	2.7	21.8	21.8	3.0	20.2	20.2	3.2
	63 (17.2)*	30.6	24.9	2.1	29.2	24.1	2.3	27.6	23.3	2.5	24.0	21.9	2.7	21.4	21.4	3.0	19.3	19.3	3.2
	67 (19.4)	32.9	25.9	2.1	31.4	25.1	2.3	29.6	24.2	2.5	26.9	23.0	2.7	24.3	22.3	3.0	22.2	21.3	3.2
	72 (22.2)	35.8	20.7	2.1	34.2	19.8	2.3	32.4	19.1	2.6	28.3	17.7	2.8	25.2	17.2	3.0	22.9	16.0	3.3

See Legend and Notes on page 12.

Manufacturer reserves the right to change, at any time, specifications and designs without notice and without obligations.

Cooling Capacities (cont)

036

EVAPORATOR AIR		CONDENSER ENTERING AIR TEMPERATURES °F (°C)																	
		75 (23.9)			85 (29.4)			95 (35)			105 (40.6)			115 (46.1)			125 (51.7)		
CFM / BF	EWB	Capacity MBtuh		Total System KW	Capacity MBtuh		Total System KW	Capacity MBtuh		Total System KW	Capacity MBtuh		Total System KW	Capacity MBtuh		Total System KW	Capacity MBtuh		Total System KW
		Total	Sens		Total	Sens		Total	Sens		Total	Sens		Total	Sens		Total	Sens	
1050 /.13	57 (13.9)	31.6	31.6	2.2	31.1	31.1	2.5	29.6	29.6	2.7	25.6	25.6	3.0	23.5	23.5	3.3	21.5	21.5	3.6
	62 (16.7)	32.9	30.5	2.2	32.0	30.9	2.5	30.5	29.2	2.7	26.3	25.8	3.0	24.2	23.8	3.3	22.1	21.7	3.6
	63 (17.2)*	33.5	24.6	2.2	32.6	24.7	2.5	30.8	23.9	2.7	26.2	22.4	3.0	23.9	22.0	3.3	21.3	20.7	3.6
	67 (19.4)	36.1	25.6	2.3	35.1	25.7	2.5	33.1	24.9	2.8	29.4	23.6	3.0	27.1	22.9	3.3	24.5	21.9	3.6
	72 (22.2)	39.3	20.5	2.3	38.2	20.3	2.5	36.2	19.6	2.8	30.9	18.2	3.1	28.2	17.6	3.3	25.2	16.4	3.6
1200 / .14	57 (13.9)	33.2	33.0	2.3	32.6	32.4	2.5	31.1	30.4	2.8	26.8	26.8	3.1	24.7	24.7	3.3	22.5	22.5	3.6
	62 (16.7)	33.5	31.7	2.3	32.6	32.1	2.5	31.1	30.4	2.8	26.8	26.8	3.1	24.7	24.7	3.3	22.5	22.5	3.6
	63 (17.2)*	33.9	25.5	2.3	33.0	25.7	2.5	31.1	24.8	2.8	26.5	23.3	3.1	24.1	22.8	3.3	21.5	21.5	3.6
	67 (19.4)	36.5	26.6	2.3	35.5	26.7	2.5	33.5	25.8	2.8	29.8	24.5	3.1	27.4	23.8	3.3	24.8	22.7	3.6
	72 (22.2)	39.7	21.3	2.3	38.7	21.1	2.6	36.6	20.3	2.9	31.3	18.9	3.1	28.5	18.3	3.4	25.5	17.1	3.7
1350 / .16	57 (13.9)	34.3	34.3	2.3	33.8	33.8	2.6	32.2	32.2	2.8	27.7	27.7	3.1	25.6	25.6	3.4	23.3	23.3	3.7
	62 (16.7)	34.7	34.2	2.3	33.8	33.8	2.6	32.2	32.2	2.8	27.7	27.7	3.1	25.6	25.6	3.4	23.3	23.3	3.7
	63 (17.2)*	35.1	27.3	2.3	34.1	27.4	2.6	32.2	26.5	2.8	27.4	24.9	3.1	25.0	24.4	3.4	22.3	22.3	3.7
	67 (19.4)	37.7	28.4	2.4	36.7	28.6	2.6	34.6	27.6	2.9	30.8	26.2	3.1	28.4	25.4	3.4	25.6	24.3	3.7
	72 (22.2)	41.1	22.8	2.4	40.0	22.6	2.6	37.8	21.7	2.9	32.4	20.2	3.2	29.5	19.6	3.4	26.4	18.2	3.7

See Legend and Notes on page 12

042

EVAPORATOR AIR		CONDENSER ENTERING AIR TEMPERATURES °F (°C)																	
		75 (23.9)			85 (29.4)			95 (35)			105 (40.6)			115 (46.1)			125 (51.7)		
CFM / BF	EWB	Capacity MBtuh		Total System KW	Capacity MBtuh		Total System KW	Capacity MBtuh		Total System KW	Capacity MBtuh		Total System KW	Capacity MBtuh		Total System KW	Capacity MBtuh		Total System KW
		Total	Sens		Total	Sens		Total	Sens		Total	Sens		Total	Sens		Total	Sens	
1225 / .12	57 (13.9)	39.5	39.5	2.8	38.1	38.1	3.1	36.3	36.3	3.4	33.1	33.1	3.7	28.9	28.9	4.1	27.8	27.8	4.5
	62 (16.7)	41.0	38.3	2.8	39.2	37.3	3.1	37.4	35.3	3.4	34.0	31.4	3.7	29.7	29.1	4.1	28.5	27.0	4.5
	63 (17.2)*	41.8	30.9	2.8	40.0	29.9	3.1	37.7	28.9	3.4	33.9	27.1	3.7	29.3	26.6	4.1	27.5	25.1	4.5
	67 (19.4)	45.0	32.2	2.8	43.0	31.1	3.1	40.5	30.1	3.4	38.1	28.6	3.7	33.2	27.7	4.1	31.6	26.5	4.5
	72 (22.2)	49.0	25.7	2.8	46.8	24.6	3.1	44.3	23.7	3.5	40.0	22.0	3.7	34.6	21.3	4.1	32.6	19.8	4.5
1400 / .14	57 (13.9)	41.4	41.4	2.8	40.0	39.1	3.1	38.1	36.7	3.5	34.7	32.6	3.7	30.3	30.3	4.2	29.1	28.0	4.6
	62 (16.7)	41.9	39.8	2.8	40.0	38.8	3.1	38.1	36.7	3.5	34.7	32.6	3.7	30.3	30.3	4.2	29.1	28.0	4.6
	63 (17.2)*	42.3	32.1	2.8	40.4	31.0	3.1	38.2	30.0	3.5	34.3	28.2	3.7	29.6	27.6	4.2	27.8	26.1	4.6
	67 (19.4)	45.5	33.4	2.9	43.5	32.3	3.2	41.0	31.2	3.5	38.5	29.7	3.7	33.6	28.7	4.2	32.0	27.5	4.6
	72 (22.2)	49.6	26.7	2.9	47.4	25.5	3.2	44.8	24.6	3.5	40.5	22.8	3.8	35.0	22.1	4.2	32.9	20.6	4.6
1575 / .16	57 (13.9)	42.9	42.9	2.9	41.4	41.4	3.2	39.4	39.4	3.5	35.9	35.9	3.8	31.3	31.3	4.2	30.1	30.1	4.6
	62 (16.7)	43.3	43.3	2.9	41.4	41.4	3.2	39.5	39.5	3.5	35.9	35.9	3.8	31.3	31.3	4.2	30.1	30.1	4.6
	63 (17.2)*	43.8	35.6	2.9	41.8	34.4	3.2	39.5	33.2	3.5	35.5	31.2	3.8	30.6	30.6	4.2	28.8	28.8	4.6
	67 (19.4)	47.1	37.0	2.9	45.0	35.8	3.2	42.4	34.6	3.6	39.9	32.9	3.8	34.8	31.8	4.2	33.1	30.5	4.6
	72 (22.2)	51.3	29.6	3.0	49.0	28.3	3.2	46.4	27.2	3.6	41.9	25.3	3.8	36.2	24.5	4.2	34.1	22.8	4.7

See Legend and Notes on page 12.

Manufacturer reserves the right to change, at any time, specifications and designs without notice and without obligations.

Cooling Capacities (cont)

048

EVAPORATOR AIR		CONDENSER ENTERING AIR TEMPERATURES °F (°C)																	
		75 (23.9)			85 (29.4)			95 (35)			105 (40.6)			115 (46.1)			125 (51.7)		
CFM / BF	EWB	Capacity MBtuh		Total System KW	Capacity MBtuh		Total System KW	Capacity MBtuh		Total System KW	Capacity MBtuh		Total System KW	Capacity MBtuh		Total System KW	Capacity MBtuh		Total System KW
		Total	Sens		Total	Sens		Total	Sens		Total	Sens		Total	Sens		Total	Sens	
1400 / .12	57 (13.9)	45.5	45.5	3.1	44.0	44.0	3.5	41.9	41.9	3.8	36.5	36.5	4.2	33.3	33.3	4.7	28.7	28.7	5.1
	62 (16.7)	47.3	43.5	3.1	45.2	42.5	3.5	43.1	40.2	3.8	37.5	35.7	4.2	34.2	33.6	4.7	29.5	29.0	5.1
	63 (17.2)*	48.2	35.1	3.1	46.1	34.0	3.5	43.5	32.8	3.8	37.4	30.9	4.2	33.7	30.9	4.7	28.5	27.7	5.1
	67 (19.4)	51.9	36.6	3.2	49.5	35.4	3.5	46.7	34.2	3.9	42.1	32.5	4.2	38.3	32.1	4.7	32.7	29.7	5.1
	72 (22.2)	56.5	29.3	3.2	54.0	28.0	3.5	51.1	26.9	3.9	44.2	25.0	4.2	39.9	24.7	4.7	33.7	22.3	5.2
1600 / .13	57 (13.9)	47.7	47.1	3.2	46.1	44.5	3.5	43.9	41.7	3.9	38.3	37.1	4.3	34.9	34.9	4.7	30.1	30.1	5.2
	62 (16.7)	48.3	45.2	3.2	46.1	44.1	3.5	44.0	41.7	3.9	38.3	37.1	4.3	34.9	34.9	4.7	30.1	30.1	5.2
	63 (17.2)*	48.8	36.5	3.2	46.6	35.3	3.5	44.0	34.1	3.9	37.9	32.1	4.3	34.1	32.1	4.7	28.8	28.8	5.2
	67 (19.4)	52.5	38.0	3.2	50.1	36.8	3.5	47.3	35.5	3.9	42.5	33.7	4.3	38.8	33.4	4.7	33.1	30.9	5.2
	72 (22.2)	57.2	30.4	3.3	54.6	29.0	3.6	51.7	28.0	4.0	44.7	26.0	4.3	40.3	25.7	4.8	34.1	23.2	5.2
1800 / .15	57 (13.9)	49.4	49.4	3.3	47.7	47.5	3.6	45.4	44.6	4.0	39.6	39.6	4.3	36.1	36.1	4.8	31.2	31.2	5.2
	62 (16.7)	50.0	48.8	3.3	47.7	47.1	3.6	45.5	44.6	4.0	39.6	39.6	4.3	36.1	36.1	4.8	31.2	31.2	5.2
	63 (17.2)*	50.5	39.0	3.3	48.2	37.7	3.6	45.5	36.4	4.0	39.2	34.3	4.3	35.3	34.3	4.8	29.8	29.8	5.2
	67 (19.4)	54.3	40.6	3.3	51.9	39.3	3.6	48.9	38.0	4.0	44.0	36.1	4.3	40.1	35.7	4.8	34.2	33.0	5.2
	72 (22.2)	59.2	32.5	3.3	56.5	31.0	3.6	53.5	29.9	4.0	46.2	27.8	4.4	41.7	27.5	4.8	35.3	24.8	5.3

See Legend and Notes on page 12.

060

EVAPORATOR AIR		CONDENSER ENTERING AIR TEMPERATURES °F (°C)																	
		75 (23.9)			85 (29.4)			95 (35)			105 (40.6)			115 (46.1)			125 (51.7)		
CFM / BF	EWB	Capacity MBtuh		Total System KW	Capacity MBtuh		Total System KW	Capacity MBtuh		Total System KW	Capacity MBtuh		Total System KW	Capacity MBtuh		Total System KW	Capacity MBtuh		Total System KW
		Total	Sens		Total	Sens		Total	Sens		Total	Sens		Total	Sens		Total	Sens	
1700 / .10	57 (13.9)	54.6	54.6	3.9	52.2	52.2	4.3	49.8	49.8	4.7	44.3	44.3	5.3	41.0	41.0	5.8	38.0	38.0	6.3
	62 (16.7)	55.2	50.4	3.9	52.2	49.2	4.3	49.8	46.5	4.7	44.3	44.3	5.3	41.0	41.0	5.8	38.0	38.0	6.3
	63 (17.2)*	55.8	40.7	3.9	52.8	39.3	4.3	49.9	38.0	4.7	43.9	35.0	5.3	40.1	34.2	5.8	36.3	32.3	6.3
	67 (19.4)	60.0	42.3	3.9	56.8	41.0	4.3	53.6	39.6	4.8	49.3	36.8	5.3	45.5	35.6	5.8	41.8	34.0	6.3
	72 (22.2)	65.4	33.9	4.0	61.9	32.4	4.4	58.5	31.1	4.8	51.7	28.3	5.3	47.3	27.4	5.8	43.0	25.5	6.4
1850 / .11	57 (13.9)	55.5	53.4	3.9	53.1	50.4	4.3	50.6	47.3	4.8	45.1	41.2	5.3	41.7	39.5	5.8	38.7	35.3	6.4
	62 (16.7)	56.1	51.2	3.9	53.1	50.0	4.3	50.7	47.3	4.8	45.1	41.2	5.3	41.7	39.5	5.8	38.7	35.3	6.4
	63 (17.2)*	56.7	41.3	3.9	53.7	40.0	4.3	50.7	38.6	4.8	44.6	35.6	5.3	40.7	34.8	5.8	37.0	32.9	6.4
	67 (19.4)	61.0	43.1	4.0	57.7	41.7	4.4	54.5	40.2	4.8	50.1	37.4	5.3	46.3	36.2	5.8	42.5	34.6	6.4
	72 (22.2)	66.5	34.5	4.0	62.9	32.9	4.4	59.5	31.7	4.9	52.6	28.8	5.4	48.1	27.9	5.9	43.8	26.0	6.5
2000 / .12	57 (13.9)	55.8	54.8	4.0	53.4	51.8	4.4	50.9	48.6	4.8	45.3	42.3	5.4	41.9	40.6	5.9	38.9	36.3	6.4
	62 (16.7)	56.4	53.2	4.0	53.4	51.3	4.4	50.9	48.6	4.8	45.3	42.3	5.4	41.9	40.6	5.9	38.9	36.3	6.4
	63 (17.2)*	57.0	42.5	4.0	54.0	41.1	4.4	51.0	39.7	4.8	44.8	36.5	5.4	41.0	35.7	5.9	37.2	33.8	6.4
	67 (19.4)	61.3	44.2	4.0	58.0	42.8	4.4	54.8	41.3	4.9	50.4	38.4	5.4	46.5	37.2	5.9	42.7	35.5	6.4
	72 (22.2)	66.9	35.4	4.1	63.3	33.8	4.5	59.9	32.5	4.9	52.9	29.6	5.4	48.4	28.6	5.9	44.0	26.7	6.5

See Legend and Notes on page 12.

Manufacturer reserves the right to change, at any time, specifications and designs without notice and without obligations.

*At 75°F (24°C) entering dry bulb-Tennessee Valley Authority (TVA) rating conditions; all others at 80°F (26.7°C) dry bulb.

LEGEND
BF— Bypass Factor
edb— Entering Dry-Bulb
ewb— Entering Wet-Bulb
KW — Total Unit Power Input
rh—Relative Humidity

COOLING NOTES:
1. Ratings are net; they account for the effects of the evaporator-fan motor power and heat.
2. Direct interpolation is permissible. Do not extrapolate.
3. The following formulas may be used:

$$t_{ldb} = t_{edb} - \frac{\text{Sensible Capacity (Btuh)}}{1.09 \times \text{CFM}}$$

t_{lwb} = Wet-bulb temperature corresponding to enthalpy air leaving evaporator coil (h_{lwb})

$$h_{lwb} = h_{ewb} - \frac{\text{Total Capacity (Btuh)}}{(4.5 \times \text{CFM})}$$

Where: h_{ewb} = Enthalpy of air entering evaporator coil

4. The Sensible Capacities is based on 80° F (26.7°C) edb temperature of air entering evaporator coil. Below 80°F (26.7°C) edb, subtract (corr factor x cfm) from Sensible Capacities. Above 80°F (26.7°C) edb, add (corr factor x cfm) to Sensible Capacities.
Correction Factor = 1.09 x (1 - BF) x (t_{edb} - 80)

Filter Pressure Drop (IN. W.C.)

FILTER SIZE in. (mm)	CFM																	
	500	600	700	800	900	1000	1100	1200	1300	1400	1500	1600	1700	1800	1900	2000	2100	2200
20X20X1 (508X508X25)	0.05	0.07	0.08	0.10	0.12	0.13	0.14	0.15	—	—	—	—	—	—	—	—	—	—
20X24X1 (508X610x25)	—	—	—	0.08	0.09	0.10	0.11	0.13	0.14	0.15	0.16	—	—	—	—	—	—	—
24X30X1 (610X762x25)	—	—	—	0.04	0.05	0.06	0.07	0.07	0.08	0.09	0.10	—	—	—	—	—	—	—
24X36X1 (610X914X25)	—	—	—	—	—	—	—	0.06	0.07	0.07	0.08	0.09	0.09	0.10	0.11	0.12	0.13	0.14

Accessory Electric Heat Pressure Drop (IN. W.C.)

HEATER kW	CFM							
	800	1000	1200	1400	1600	1800	2000	2200
5-20	0.033	0.037	0.042	0.047	0.052	0.060	0.067	0.075

Wet Coil Air Delivery*

Unit Size	Speed Taps	Tap Color	Air Delivery	External Static Pressure (in. W.C.)									
				0.1	0.2	0.3	0.4	0.5	0.6	0.7	0.8	0.9	1
24	1	BLU	SCFM	893	805	721	672	628	579	530	495	455	414
	2	PNK	SCFM	956	862	772	720	673	620	567	530	457	444
	3	RED†	SCFM	1000	963	917	873	828	783	740	692	636	579
	4	ORN	SCFM	1041	1011	964	920	863	836	791	744	695	643
	5	BLK	SCFM	1182	1131	1105	1060	1025	986	944	906	864	800
30	1	BLU	SCFM	1000	965	923	883	839	800	749	716	660	617
	2	PNK	SCFM	1060	1018	986	946	907	875	830	792	752	695
	3	RED†	SCFM	1171	1135	1096	1062	1031	1000	964	929	894	857
	4	ORN	SCFM	1302	1265	1232	1195	1162	1131	1098	1066	1042	1012
	5	BLK	SCFM	1304	1267	1230	1197	1164	1132	1097	1065	1041	1000
36	1	BLU	SCFM	1226	1153	1106	1062	1015	969	921	848	802	758
	2	PNK	SCFM	1274	1224	1182	1137	1093	1051	1008	959	891	844
	3	RED†	SCFM	1398	1370	1329	1290	1250	1209	1168	1126	1085	1020
	4	ORN	SCFM	1422	1386	1349	1309	1270	1231	1192	1151	1110	1066
	5	BLK	SCFM	1530	1486	1450	1411	1372	1335	1297	1261	1222	1194
42	1	BLU	SCFM	1401	1296	1242	1188	1142	1190	1042	997	921	872
	2	PNK	SCFM	1478	1446	1401	1355	1310	1259	1211	1168	1121	1070
	3	RED	SCFM	1539	1504	1460	1408	1366	1319	1270	1224	1180	1141
	4	ORN†	SCFM	1608	1580	1537	1487	1443	1400	1354	1307	1263	1222
	5	BLK	SCFM	1632	1596	1554	1511	1466	1424	1380	1330	1285	1246
48	1	BLU	SCFM	1621	1582	1530	1480	1440	1379	1326	1280	1230	1176
	2	PNK	SCFM	1695	1650	1605	1561	1521	1473	1411	1362	1320	1268
	3	RED†	SCFM	1805	1764	1727	1680	1638	1596	1543	1488	1444	1404
	4	ORN	SCFM	1846	1807	1769	1725	1680	1639	1595	1537	1488	1447
	5	BLK	SCFM	2057	2014	1974	1935	1894	1853	1811	1768	1684	1578
60	1	BLU	SCFM	1890	1843	1802	1757	1712	1668	1626	1580	1536	1492
	2	PNK	SCFM	1931	1903	1853	1817	1770	1729	1687	1642	1600	1554
	3	RED†	SCFM	2056	2027	1985	1946	1900	1857	1819	1780	1741	1699
	4	ORN	SCFM	2070	2045	2004	1962	1921	1877	1838	1799	1761	1719
	5	BLK	SCFM	2202	2178	2139	2100	2063	2027	1981	1943	1906	1871

*. Air delivery values are based on operating voltage of 230v, wet coil, without filter or electric heater. Deduct filter and electric heater pressure drops to obtain static pressure available for ducting.

† Factory-shipped cooling speed.

NOTES:

1. Do not operate the unit at a cooling airflow that is less than 350 cfm for each 12,000 Btuh of rated cooling capacity. Evaporator coil frosting may occur at airflows below this point.
2. Standard Cubic Feet per Minute.

Typical Connection Wiring Schematic

208/230-1-60 024-060

CONNECTION WIRING DIAGRAM
DANGER: ELECTRICAL SHOCK HAZARD DISCONNECT POWER BEFORE SERVICING

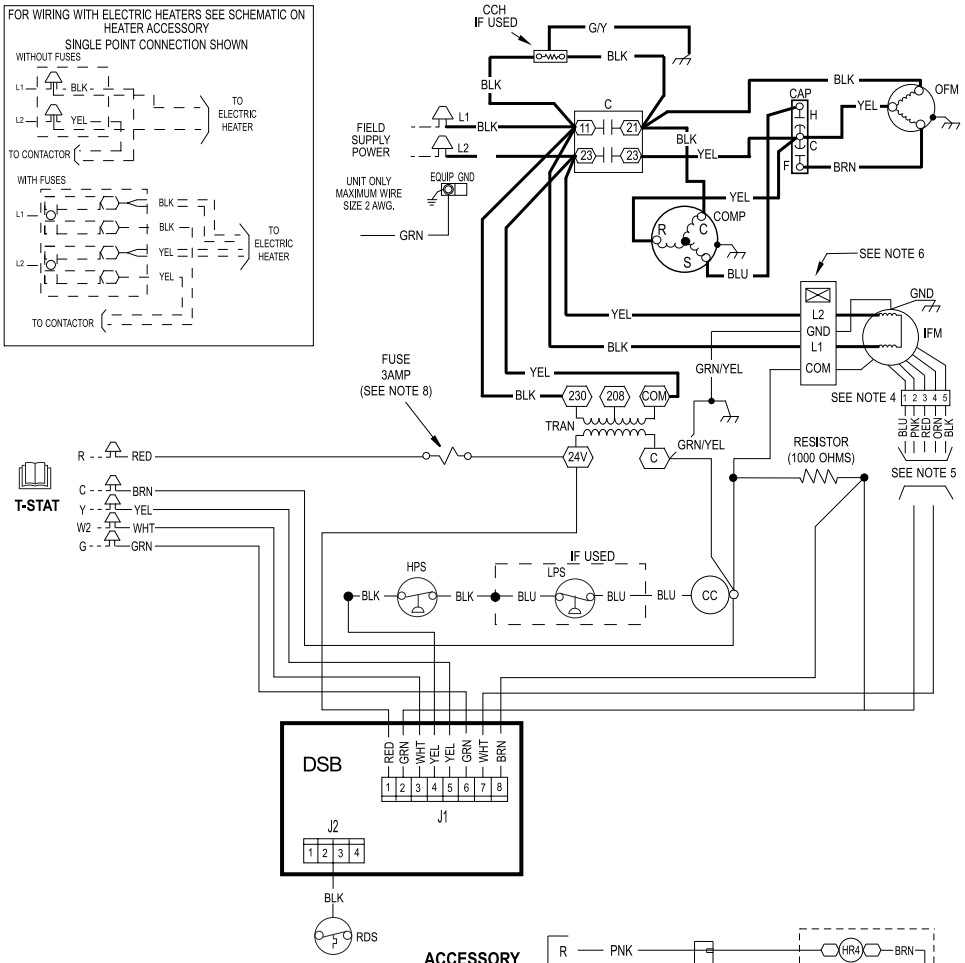

UNIT COMPONENT ARRANGEMENT

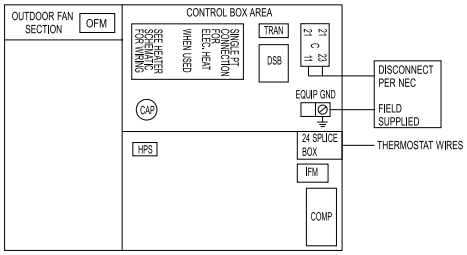

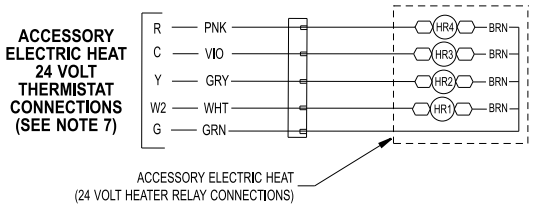

NOTES:

1. IF ANY OF THE ORIGINAL WIRES FURNISHED ARE REPLACED, IT MUST BE REPLACED WITH THE SAME TYPE OF WIRE OR IT'S EQUIVALENT.
2. SEE PRICE PAGES FOR THERMOSTAT.
3. USE CONDUCTORS SUITABLE FOR AT LEAST 75˚C (167˚F) FOR FIELD INSTALLATION.
4. FACTORY WIRING FOR SPEED SELECTOR PLUG
5. CHANGING OF SPEED TAPS MAY BE REQUIRED WHEN USING FIELD INSTALLED ELECTRIC HEATERS. CONSULT INSTALLATION INSTRUCTIONS TO DETERMINE CORRECT SPEED TAP SETTING.
6. "DO NOT DISCONNECT PLUG UNDER LOAD."
7. MULTI-STAGE HEATER SHOWN. SINGLE STAGE HEATERS HAVE WHITE AND BROWN WIRES ONLY.
8. FUSE MANUFACTURED BY LITTLELFUSE, P/N 257003.
9. N.E.C. CLASS 2 24 V
10. CONSULT IN INSTALLATION INSTRUCTIONS FOR FACTORY SPEED TAP SETTINGS.

A250300

Typical Ladder Wiring Schematic

208/230-1-60 024-060

LADDER WIRING DIAGRAM
DANGER: ELECTRICAL SHOCK HAZARD DISCONNECT POWER BEFORE SERVICING

LEGEND

CAP	CAPACITOR	COMP	COMPRESSOR MOTOR	HPS	HIGH PRESSURE SWITCH
CC	CONTACTOR COIL	DSB	DISSIPATION BOARD	HR	HEATER RELAY
CCH	CRANKCASE HEATER	GND	GROUND	IFM	INDOOR FAN MOTOR
△	FIELD SPLICE	——	FACTORY WIRING	– – –	ACCESSORY OR OPTIONAL WIRING
⬭	TERMINAL (MARKED)	– –	FIELD CONTROL WIRING	▬	FACTORY HI VOLTAGE
○	TERMINAL (UNMARKED)	—– –	FIELD POWER WIRING	C	CONTACTOR
●	SPLICE	OFM	OUTDOOR FAN MOTOR	TRAN	TRANSFORMER
		T-STAT	THERMOSTAT		

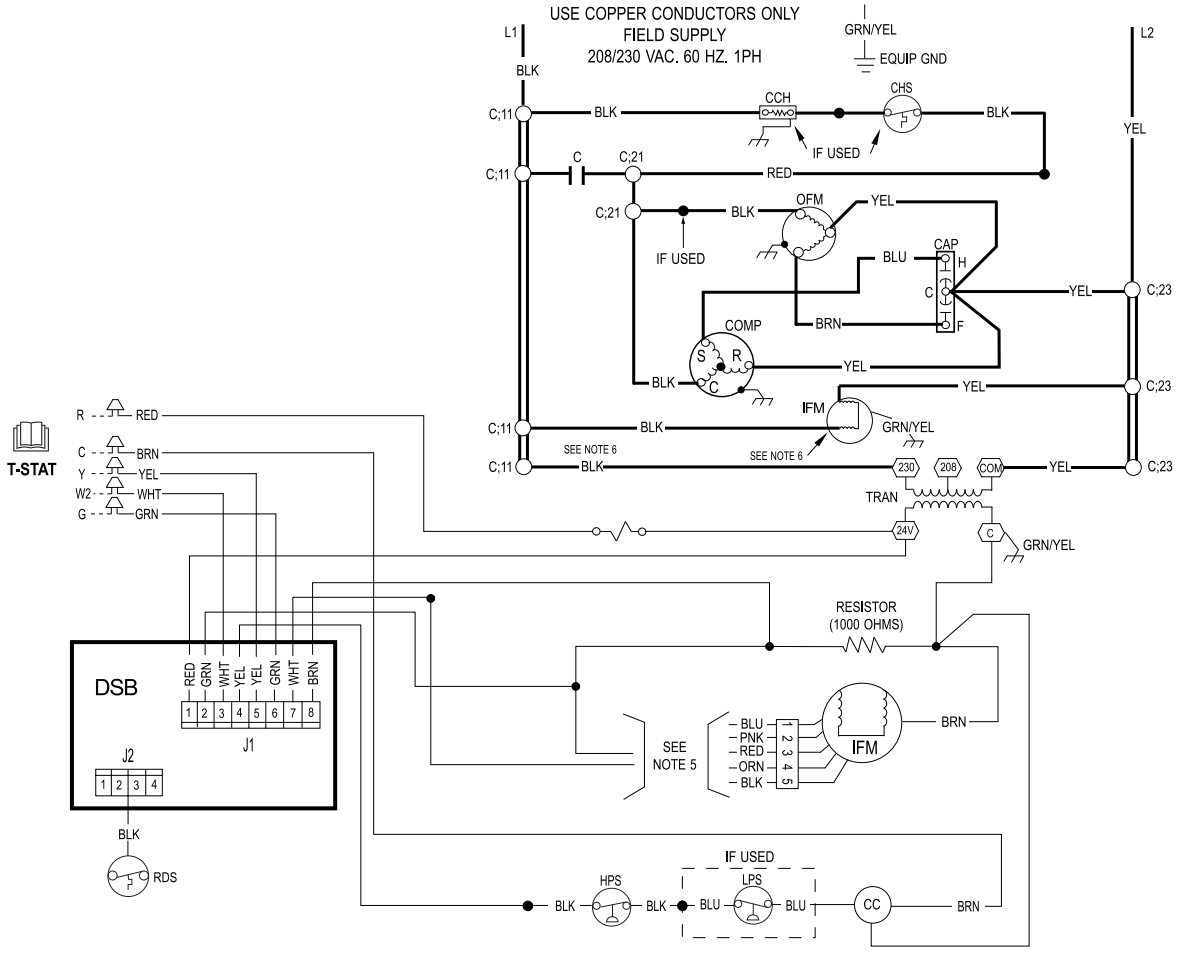

Typical Field Wiring

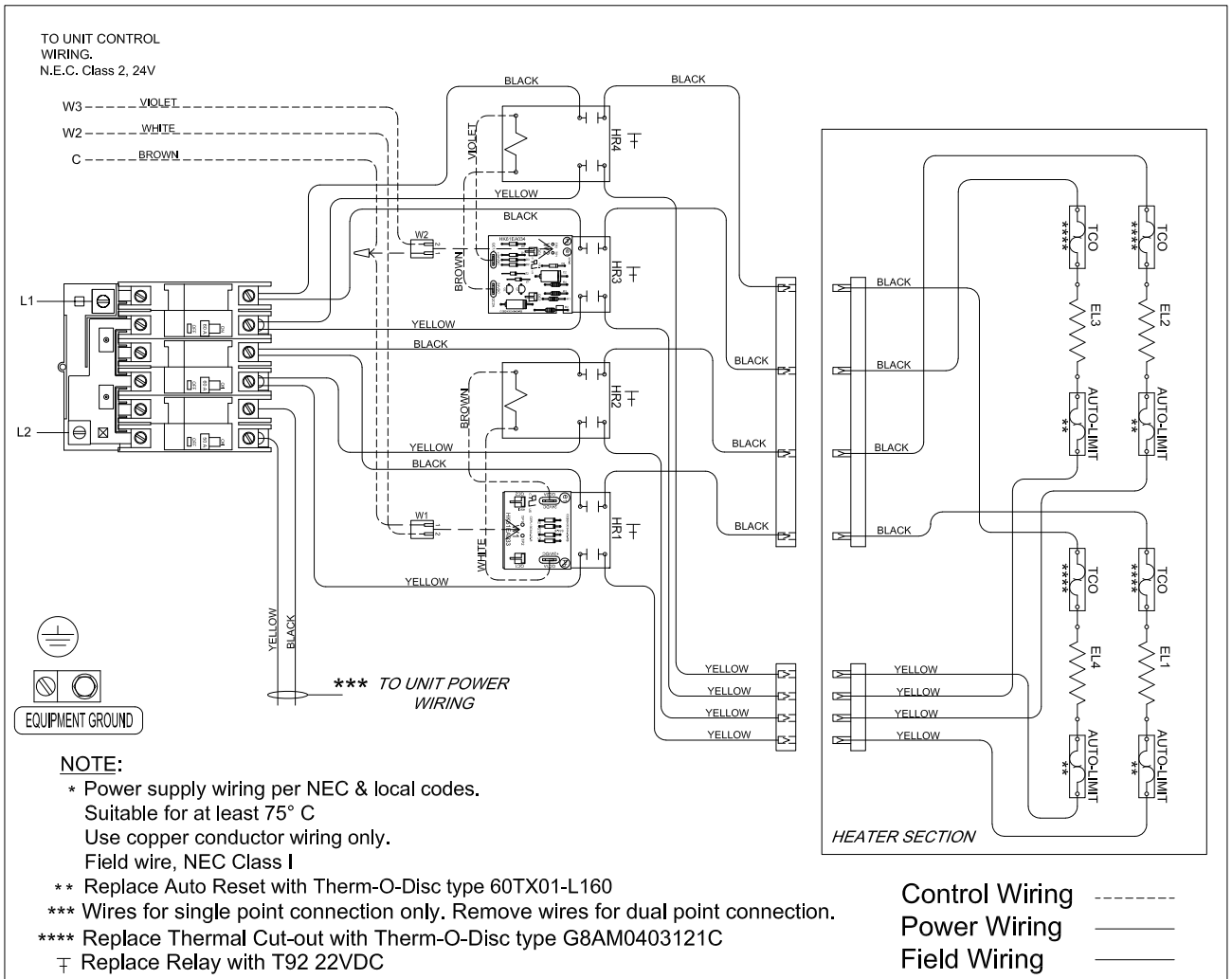

NOTE:

- * Power supply wiring per NEC & local codes.
  Suitable for at least 75° C
  Use copper conductor wiring only.
  Field wire, NEC Class I
- ** Replace Auto Reset with Therm-O-Disc type 60TX01-L160
- *** Wires for single point connection only. Remove wires for dual point connection.
- **** Replace Thermal Cut-out with Therm-O-Disc type G8AM0403121C
- ⊤ Replace Relay with T92 22VDC

Control Wiring - - - - - - - -
Power Wiring ———
Field Wiring ———

KILOWATTS	VOLTS	PHASE	HERTZ	CONTROL VOLTS	STEPS	HEATER AMPS	CIRCUIT BREAKER		
							C.B. # 1	C.B. # 2	C.B. # 3
15.0/20.0	208/240	1	60	24 AC	2	72.1/83.3	50A	60A	60A
CPHEATER132A03 (110070158)									

A190339

Single-Phase Accessory Electric Heater Wiring

Electrical Data

MODEL	NOMINAL V-PH-HZ	VOLTAGE RANGE		COMPRESSOR		OFM	IFM	NOMINAL ELECTRIC HEAT*	POWER SUPPLY		
		MIN	MAX	RLA	LRA	FLA	FLA	kW	FLA	MCA	MOCP†
24	208/230-1-60	197	253	9	63	0.94	2.7	-/-	-/-	14.9	20
								3.8/5	18/20.8	25.9/29.4	30/30
								5.6/7.5	27/31.3	37.1/42.5	40/45
								7.5/10	36.1/41.7	48.5/55.5	50/60
30	208/230-1-60	197	253	12.5	67	0.94	3.9	-/-	-/-	20.4	30
								3.8/5	18/20.8	27.4/30.9	30/35
								5.6/7.5	27/31.3	38.6/44	40/45
								7.5/10	36.1/41.7	50/57	50/60
36	208/230-1-60	197	253	13.5	75	1.5	3.9	-/-	-/-	22.3	35
								3.8/5	18/20.8	27.4/30.9	35/35
								5.6/7.5	27/31.3	38.6/44	40/45
								7.5/10	36.1/41.7	50/57	50/60
								11.3/15	54.1/62.5	72.5/83	80/90
42	208/230-1-60	197	253	15.8	96	1.5	3.9	-/-	-/-	25.2	40
								3.8/5	18/20.8	27.4/30.9	40/40
								5.6/7.5	27/31.3	38.6/44	40/45
								7.5/10	36.1/41.7	50/57	50/60
								11.3/15	54.1/62.5	72.5/83	80/90
48	208/230-1-60	197	253	19.4	102	1.5	5.1	-/-	-/-	30.9	50
								3.8/5	18/20.8	30.9/32.4	50/50
								5.6/7.5	27/31.3	40.1/45.5	50/50
								7.5/10	36.1/41.7	51.5/58.5	60/60
								11.3/15	54.1/62.5	74/84.5	80/90
								15/20	72.1/83.3	96.5/110.5	100/125
60	208/230-1-60	197	253	23.3	125	1.9	6.9	-/-	-/-	37.9	60
								3.8/5	18/20.8	37.9/37.9	60/60
								5.6/7.5	27/31.3	42.4/47.8	60/60
								7.5/10	36.1/41.7	53.8/60.8	60/70
								11.3/15	54.1/62.5	76.3/86.8	80/90
								15/20	72.1/83.3	98.8/112.8	100/125

* Heater capacity (kW) based on heater voltage of 208v & 240v. If power distribution voltage to unit varies from rated heater voltage, heater kW will vary accordingly.
† HACR Type Circuit breaker
LEGEND
FLA - Full Load Amps
LRA - Locked Rotor Amps
MCA - Minimum Circuit Amps
MOCP - Maximum Overcurrent Protection
RLA - Rated Load Amps
NOTES:
1. In compliance with NEC (National Electrical Code) requirements for multi motor and combination load equipment (refer to NEC Articles 430 and 440), the overcurrent protective device for the unit shall be Power Supply fuse or circuit breaker.
2. Minimum wire size is based on 60_C copper wire. If other than 60_C wire is used, or if length exceeds wire length in table, determine size from NEC.

Operating Sequence

Cooling Operation

With a call for cooling (Y/G), the contactor is energized which brings on the compressor and outdoor fan. The indoor fan is also energized. When the cooling demand is met, Y and G are de-energized shutting off the contactor. The indoor fan stops after a 60 second delay.

Heating Operation

With a call for heating (W2), the auxiliary or electric heat energizes along with the indoor blower. In case of staged heating, W3 is energized if the demand is not met. The highest airflow selected is run while the electric heat is in operation. When heating demand is met, W3 and W2 sequentially de-energize shutting off the indoor fan and the electric heater.

Continuous Fan

With the continuous indoor fan option selected on the thermostat, G is continuously energized keeping the indoor fan running at all times.

Application Data

Condensate trap — A 2-in. (51 mm) condensate trap must be field supplied.

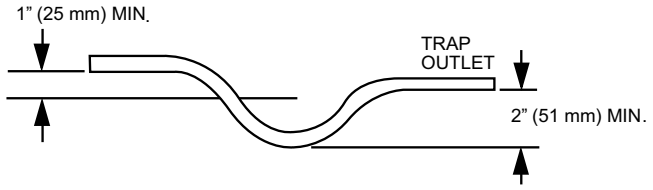

A08001

Maximum cooling airflow — To minimize the possibility of condensate blow-off from the evaporator, airflow through the units should not exceed 450 CFM/ton.

Minimum cooling airflow — The minimum cooling airflow is 350 CFM/ton.

Minimum cooling operating outdoor air temperature — All standard units have a minimum ambient operating temperature of 40°F (4.4°C). With accessory low ambient temperature kit, units can operate at temperatures down to 0°F (-17.8°C).

Maximum operating outdoor air temperature — Maximum outdoor operating air temperature for cooling is 125°F (51.7°C).

Typical Installation

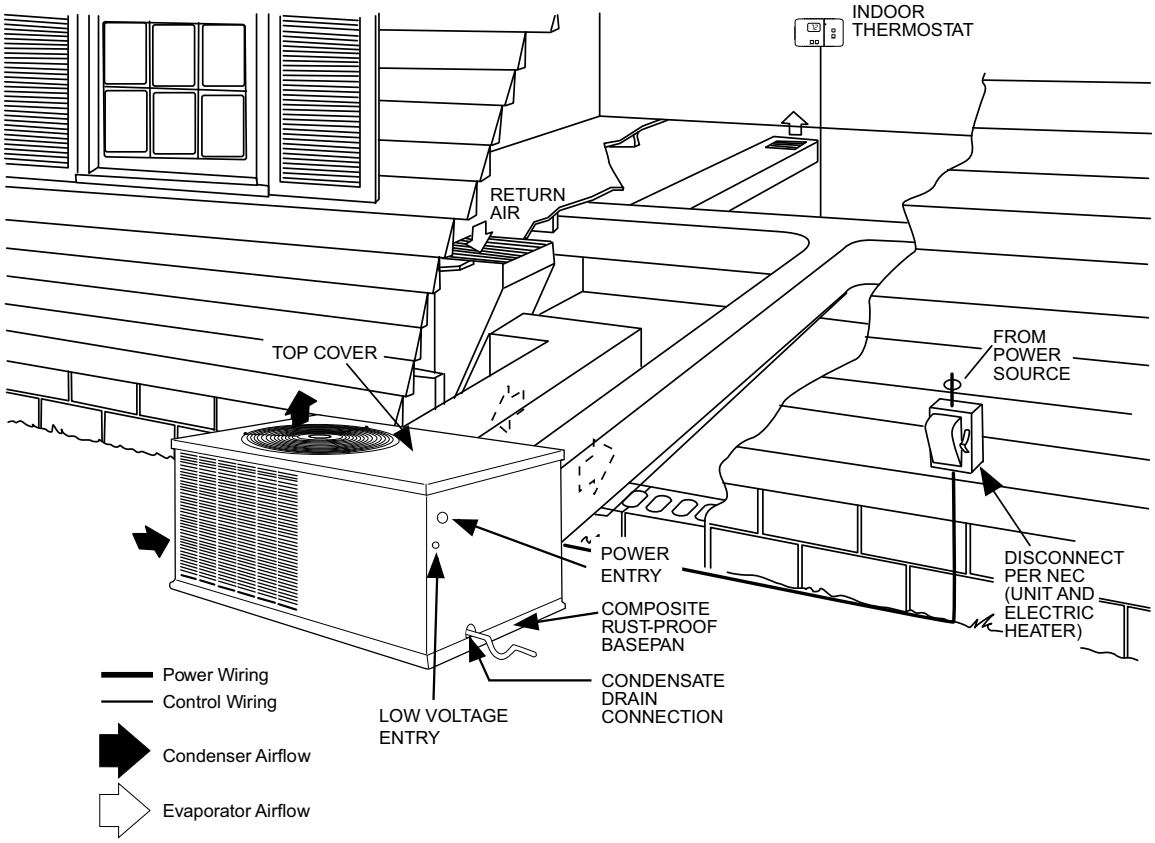

A10135

Guide Specifications

General

Furnish and install outdoor package, electrically controlled, air conditioner utilizing a scroll compressor for cooling duty. Unit shall discharge supply air horizontally as shown on contract drawings.

Nominal unit electrical characteristics shall be _____ v, _____ ph, 60 Hz. The unit shall be capable of satisfactory operation within voltage limits of _____ v to _____ v. Unit power wiring shall enter unit cabinet at a single location.

Separate power supply shall not be required for electric heat.

Cooling Capacity

Total cooling capacity of the unit shall be _____ Btuh or greater, and sensible capacity shall be _____ Btuh or greater at conditions of _____ CFM indoor air entering unit at _____F dry bulb, _____ F wet bulb and outdoor entering air of _____F dry bulb. Total design conditions shall be a minimum of _____ Btuh/Watt. The unit shall be capable of cooling operation down to 40°F (4.4°C) as shipped from the factory.

Cabinet

Unit cabinet shall be constructed of phosphated, bonderized, zinc-coated, prepainted steel. Basepan shall be made of a single-piece non-corrosive, composite material.

Evaporator-fan compartment interior cabinet surfaces shall be insulated with a minimum 1/2-in. (12.7 mm) thick, flexible fiberglass insulation, coated on the air side with aluminum foil.

Cabinet panels shall be easily removable for servicing.

Outdoor coil shall be protected by metal louvered panels.

Compressor

Compressor shall be fully hermetic type with external vibration isolation.

Condenser Section

Condenser fan shall be of the direct-driven propeller type blades, riveted to corrosion-resistant spiders, and shall be dynamically balanced and discharge air vertically upwards.

Condenser coils shall have aluminum-plate fins mechanically bonded to copper tubes with all joints brazed.

Tube sheet openings shall be belled to prevent tube wear.

Evaporator Section

Fan shall be multi-speed with direct drive motor as shown on the equipment drawings.

Fan wheel shall be made from steel, be double-inlet type with forward-curved blades with a corrosion-resistant finish and dynamically balanced.

Evaporator coils shall have aluminum-plate fins mechanically bonded to aluminum tubes with all joints brazed.

Tube sheet openings shall be belled to prevent tube wear.

Motors

Compressor motors shall be of the refrigerant cooled type with line break thermal and current overload protection.

All fan motors shall have permanently lubricated bearings, and inherent automatic reset thermal overload protection.

Condenser fan motor shall be totally enclosed.

Refrigerant System

Refrigerant system shall include fixed orifice or TXV metering system.

Controls

Unit shall be complete with self-contained low voltage control circuit.

Approvals

Unit shall be UL listed as a total package for safety requirements. All wiring shall be in accordance with NEC.

Unit shall be rated in accordance with AHRI Standards 210/240 and 270.

Cabinet insulation shall conform to ASHRAE Standard 62.2

Insulation and adhesive shall meet NFPA 90A requirements for flame spread and smoke generation.

Unit shall have a sloped drain pan that conforms to ASHRAE Standard 62.2.

Accessories

Field-installed accessories shall include solid-state compressor short-cycle device, outdoor thermostat, room thermostats, electric heaters with single-point connection, crankcase heater, and low-ambient kit.

© 2025 Carrier. All rights reserved.

Manufacturer reserves the right to change, at any time, specifications and designs without notice and without obligations.