Duct Free Systems
Product Data Digest

¾ to 5 Nominal Tons

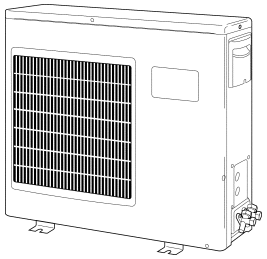

538C & D Condensers

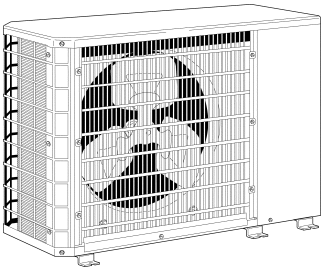

538A, B, & J Condensers

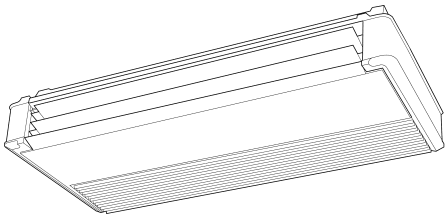

Under Ceiling

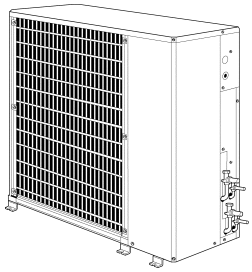

538S Condenser

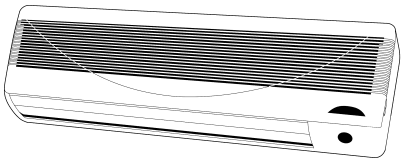

High Wall

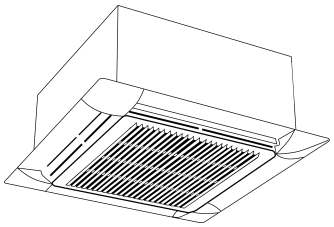

Cassette

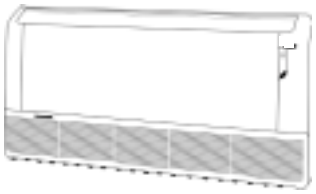

Console

Copyright 2001 Carrier Corporation

Catalog #8538-007 (CD) #8538-010 (PRINT)

Duct-Free Systems Digest

Product

ARI Capacities 1
Application Data 2
Electrical Data 3
System Charges 4
Features & Accessories 5
Guide Specifications 6
Model Number Nomenclature 7
Physical Data 8
Sound Data 9
System Cross-Match (Carrier/Bryant) 10
System & Unit Specifications 11

Application

Condenser Only Ratings 12
Performance Data & Expanded Ratings 13
Piston & Charge Combinations 14
Refrigerant Lines & Long Line Applications 15
Selection Procedure 16
Drawings 17

Installation

AccuRater Metering Device 18
Charge Verification 19
Controls 20
Control Circuit Connections (Under Development) 21
Installation Diagrams 22
Service 23
Start-Up Instructions & Checklist 24
Wire Diagrams (Under Development) 25

Maintenance/ Repair

Cleaning & Maintenance 26
Troubleshooting & Fault Codes 27

HELP

ARI* Capacities High Wall Applications

Indoor Section	Outdoor Section	Std. CFM	Net Cooling BTUH	Total kW	SEER	EER	Heating High BTUH	Heating High COP	Heating High HSPF	Heating Low BTUH	Heating Low COP
619EAX0090E0	538CAX009000	215	8,500	0.88	10.5	9.7	---	---	---	---	---
619EAX0120E0	538CAX012000	300	11,000	1.18	10.5	9.3	---	---	---	---	---
619ENX0120E0	538CAX012000	302	11,600	1.15	11.0	10.1	---	---	---	---	---
619ENX0180E0	538ANX018000	480	17,300	1.66	11.3	10.4	---	---	---	---	---
619ENX0180E0	538JNX018000	480	16,200	1.67	11.0	9.7	---	---	---	---	---
619ENX0240E0	538JNX018000	550	17,600	1.69	11.7	10.4	---	---	---	---	---
619ENX0240E0	538ANX024000	550	22,600	2.09	12.0	10.8	---	---	---	---	---
619ENX0240E0	538JNX024000	550	22,600	2.00	11.3	11.3	---	---	---	---	---
619EAX0090W0	538DAX009000	252	8,700	0.95	10.0	9.2	9,000	3.20	6.80	5,120	2.20
619ENX0120H0	538DNX012000	300	11,100	1.17	10.0	9.5	11,700	2.70	6.80	7,400	2.16
619ENX0180H0	538DNX018000	485	17,300	1.71	11.0	10.1	16,400	2.84	6.80	9,600	2.04
619ENX0240H0	538DNX024000	520	23,000	2.21	11.0	10.4	21,000	2.92	6.80	12,700	2.20

Legend

*****	Air Conditioning & Refrigeration Institute
COP	Coefficient of Performance
db	Dry Bulb
HSPF	Heating Seasional Performance Factor
wb	Wet Bulb

Notes:

1) Ratings are net values reflecting the effects of circulating fan heat. Supplemental electric heat is not included. Ratings are based on:
   Cooling Standard: 80 deg F db, 67 deg F wb air entering evaporator and 95 deg F db air entering condenser
   High Temperature Heating Standard: 70 deg F db air entering evaporator and 47 deg F db, 43 F wb air entering condenser
   Low Temperature Heating Standard: 70 deg F db air entering evaporator and 17 deg F db, 15 F wb air entering condenser
2) Total kW is for total system, including compressor and outdoor and indoor fan motors.
3) Ratings are based on 25 ft of interconnecting refrigerent lines.
4) All system ratings are based on fan coil units operating at high fan speed. Consult Physical Data tables for airflows at all available fan speeds.

Rev "B"
01/04/02

ARI* Capacities Under Ceiling Applications

Indoor Section	Outdoor Section	Std. CFM	Net Cooling BTUH	Total kW	SEER	EER	Heating High BTUH	Heating High COP	Heating High HSPF	Heating Low BTUH	Heating Low COP
619CNX0240E0AC	538ANX018000	500	18,000	1.64	12.0	11.0	--	--	--	--	--
619CNX0240E0AC	538JNX018000	500	18,000	1.71	11.6	10.5	--	--	--	--	--
619CNX0240E0AC	538ANX024000	600	22,800	2.07	12.0	11.0	--	--	--	--	--
619CNX0240E0AC	538JNX024000	600	23,000	2.06	11.0	11.2	--	--	--	--	--
619CNX0360E0AC	538JNX030000	840	29,000	2.98	10.3	9.7	--	--	--	--	--
619CNX0360E0AC	538JNX036000	840	34,000	3.53	10.1	9.6	--	--	--	--	--
619CNX0360E0AC	538ANX,APX,AEX036000	840	34,000	3.25	12.0	10.5	--	--	--	--	--
619CNX0360E0AC	538ANX030000	840	30,000	2.73	12.0	11.0	--	--	--	--	--
619CNX0480E0AC	538ANX,APX,AEX048000	1,200	47,000	4.37	12.0	10.8	--	--	--	--	--
619CNX0480E0AC	538JNX048000	1,200	45,500	4.61	10.8	9.9	--	--	--	--	--
619CNX0600E0AA	538ANX,APX,AEX060000	1,600	58,000	5.18	12.0	11.2	--	--	--	--	--
619CNX0600E0AA	538JNX060	1,600	58,500	6.15	10.8	9.5	--	--	--	--	--
619CNX0240W0AC	538BNX018000	500	19,000	1.90	11.0	10.0	17,000	3.2	7.2	9,800	2.1
619CNX0240W0AC	538BNX024000	525	24,000	2.40	11.0	10.0	22,600	3.0	7.3	12,500	2.0
619CNX0360W0AC	538BNX030000	870	30,000	2.94	11.0	10.2	28,000	3.3	7.4	15,600	2.2
619CNX0360W0AC	538BNX036000	870	34,600	3.39	11.5	10.2	33,000	3.3	7.2	19,000	2.2
619CNX0360W0AC	538BPX,BEX036000	870	36,000	3.67	11.0	9.8	34,400	3.0	6.8	19,800	2.0
619CNX0480W0AC	538BNX,BPX,BEX048000	1,100	48,000	5.00	10.2	9.6	45,500	3.2	7.3	28,200	2.2
619CNX0600W0AA	538BNX,BPX,BEX060000	1,600	58,000	5.85	11.0	9.9	57,500	3.2	7.4	32,000	2.2

Legend

*****	Air Conditioning & Refrigeration Institute
COP	Coefficient of Performance
db	Dry Bulb
HSPF	Heating Seasional Performance Factor
wb	Wet Bulb

Notes:

1) Ratings are net values reflecting the effects of circulating fan heat. Supplemental electric heat is not included. Ratings are based on:
   Cooling Standard: 80 deg F db, 67 deg F wb air entering evaporator and 95 deg F db air entering condenser
   High Temperature Heating Standard: 70 deg F db air entering evaporator and 47 deg F db, 43 F wb air entering condenser
   Low Temperature Heating Standard: 70 deg F db air entering evaporator and 17 deg F db, 15 F wb air entering condenser
2) Total kW is for total system, including compressor and outdoor and indoor fan motors.
3) Ratings are based on 25 ft of interconnecting refrigerent lines.
4) All system ratings are based on fan coil units operating at high fan speed. Consult Physical Data tables for airflows at all available fan speeds.

ARI* Capacities

Console Applications

Indoor Section	Outdoor Section	Std. CFM	Net Cooling BTUH	Total kW	SEER	EER	Heating High BTUH	Heating High COP	Heating High HSPF	Heating Low BTUH	Heating Low COP
40CG-018---301RM	38CG-018---301	650	18,000	1.90	10.0	9.4	--	--	--	--	--
40CG-024---301RM	38CG-024---301	800	23,400	2.40	10.0	9.7	--	--	--	--	--
40CG-030---301RM	38CG-030---301	800	30,000	3.40	10.0	8.8	--	--	--	--	--
40CS-018---301RM	38CS-018---301	650	18,000	1.90	10.0	9.4	18,000	2.5	6.8	n/a	n/a
40CS-024---301RM	38CS-024---301	800	23,400	2.40	10.0	9.7	24,000	2.9	6.9	n/a	n/a
40CS-030---301RM	38CS-030---301	800	30,000	3.40	10.0	8.8	31,000	2.6	6.8	n/a	n/a

Legend

*****	Air Conditioning & Refrigeration Institute
COP	Coefficient of Performance
db	Dry Bulb
HSPF	Heating Seasional Performance Factor
wb	Wet Bulb
n/a	Not Available at This Time

Notes:

1) Ratings are net values reflecting the effects of circulating fan heat. Supplemental electric heat is not included. Ratings are based on:
   Cooling Standard: 80 deg F db, 67 deg F wb air entering evaporator and 95 deg F db air entering condenser
   High Temperature Heating Standard: 70 deg F db air entering evaporator and 47 deg F db, 43 F wb air entering condenser
   Low Temperature Heating Standard: 70 deg F db air entering evaporator and 17 deg F db, 15 F wb air entering condenser
2) Total kW is for total system, including compressor and outdoor and indoor fan motors.
3) Ratings are based on 25 ft of interconnecting refrigerent lines.
4) All system ratings are based on fan coil units operating at high fan speed. Consult Physical Data tables for airflows at all available fan speeds.

ARI* Capacities In Ceiling Cassette Applications

Indoor Section	Outdoor Section	Std. CFM	Net Cooling BTUH	Total kW	SEER	EER	Heating High BTUH	Heating High COP	Heating High HSPF	Heating Low BTUH	Heating Low COP
619FNX0240E0	538ANX018000	525	18,300	1.76	11.0	10.4	--	--	--	--	--
619FNX0240E0	538JNX018000	525	17,800	1.68	11.4	10.8	--	--	--	--	--
619FNX0360E0	538JNX036000	915	34,400	3.45	10.5	9.9	--	--	--	--	--
619FNX0360E0	538ANX024000	915	24,000	2.20	11.0	10.9	--	--	--	--	--
619FNX0360E0	538JNX030000	915	29,000	2.87	11.1	10.4	--	--	--	--	--
619FNX0360E0	538JNX024000	915	24,000	2.12	11.8	11.3	--	--	--	--	--
619FNX0360E0	538ANX,APX,AEX,036000	915	33,000	3.14	10.8	10.5	--	--	--	--	--
619FNX0360E0	538ANX030000	915	30,000	3.13	10.8	9.6	--	--	--	--	--
619FNX0240W0	538BNX018000	525	18,000	2.00	10.0	9.0	17,600	3.04	6.8	11,000	2.0
619FNX0360W0	538BNX024000	980	25,000	2.44	10.7	10.2	23,800	3.34	7.6	13,400	2.3
619FNX0360W0	538BNX030000	980	29,000	2.61	11.5	11.1	27,000	3.27	7.6	15,900	2.3
619FNX0480W0	538BNX036000	1,100	33,000	3.47	10.5	9.5	33,000	3.30	6.8	20,000	2.2
619FNX0480W0	538BPX,BEX,036000	1,100	34,400	3.65	10.0	9.2	34,000	3.00	6.8	21,000	2.0

Legend

*****	Air Conditioning & Refrigeration Institute
COP	Coefficient of Performance
db	Dry Bulb
HSPF	Heating Seasional Performance Factor
wb	Wet Bulb

Notes:

1) Ratings are net values reflecting the effects of circulating fan heat. Supplemental electric heat is not included. Ratings are based on:
   Cooling Standard: 80 deg F db, 67 deg F wb air entering evaporator and 95 deg F db air entering condenser
   High Temperature Heating Standard: 70 deg F db air entering evaporator and 47 deg F db, 43 F wb air entering condenser
   Low Temperature Heating Standard: 70 deg F db air entering evaporator and 17 deg F db, 15 F wb air entering condenser
2) Total kW is for total system, including compressor and outdoor and indoor fan motors.
3) Ratings are based on 25 ft of interconnecting refrigerent lines.
4) All system ratings are based on fan coil units operating at high fan speed. Consult Physical Data tables for airflows at all available fan speeds.

Rev"B"
01/04/02

ARI* Capacities Multi Split Applications

Nominal Capacity	Fan Coils	Qty	Circuit	Indoor Section	Outdoor Section	Std. CFM	Net Cooling BTUH	Net Heating BTUH	Total kW	SEER	EER
2 Tons	Cassette	2	A	619FNX0240E0	538SNX024000	1,050	23,000	n/a	2.20	12.0	10.5
	Under Ceiling	2	A	619CNX0240E0AC +	538SNX024000	1,000	24,000	n/a	2.22	12.0	10.8
	High Wall	2	A	619ENX0180E0	538SNX024000	960	23,000	n/a	2.03	12.0	11.3
	Cassette Under Ceiling	1 1	A A	619FNX0240E0 619CNX0240E0AC +	538SNX024000	1,025	23,000	n/a	2.24	12.0	10.3
	Cassette High Wall	1 1	A A	619FNX0240E0 619ENX0180E0	538SNX024000	1,005	23,000	n/a	2.14	12.0	10.7
	Under Ceiling High Wall	1 1	A A	619CNX0240E0AC + 619ENX0180E0	538SNX024000	980	23,000	n/a	2.15	12.0	10.7
2.5 Tons	Console	2		40CG-030---301RM	38SC-030---3	800	30,000	n/a	2 x 3.4	10.0	8.8
				40CS-030---301RM	38SB-030---3	800	30,000	31,000	2 x 3.4	10.0	8.8
4 Tons	High Wall	2 2	A B	619ENX0180E0 619ENX0180E0	538SNX048000	1,920	46,000	n/a	4.06	12.0	11.3
	High Wall	1 2	A B	619ENX0240E0 619ENX0180E0	538SNX048000	1,510	45,800	n/a	4.12	12.0	11.1
	High Wall	1 1	A B	619ENX0240E0 619ENX0240E0	538SNX048000	1,100	45,600	n/a	4.18	12.0	10.9
	Under Ceiling	2 2	A B	619CNX0240E0AC + 619CNX0240E0AC +	538SNX048000	2,000	48,000	n/a	4.44	12.0	10.8
	Under Ceiling	1 2	A B	619CNX0240E0AC 619CNX0240E0AC +	538SNX048000	1,600	46,800	n/a	4.29	12.0	10.9
	Under Ceiling	1 1	A B	619CNX0240E0AC 619CNX0240E0AC	538SNX048000	1,200	45,600	n/a	4.14	12.0	11.0
	Cassette	2 2	A B	619FNX0240E0 619FNX0240E0	538SNX048000	2,100	46,000	n/a	4.40	12.0	10.5
	Cassette	2 1	A B	619FNX0240E0 619FNX0360E0	538SNX048000	1,965	47,000	n/a	4.40	12.0	10.7
	Cassette	1 1	A B	619FNX0360E0 619FNX0360E0	538SNX048000	1,830	48,000	n/a	4.40	12.0	10.9
	High Wall High Wall Under Ceiling	2 1 1	A B B	619ENX0180E0 619ENX0180E0 619CNX0240E0AC +	538SNX048000	1,940	46,000	n/a	4.18	12.0	11.0
	High Wall High Wall Cassette	2 1 1	A B B	619ENX0180E0 619ENX0180E0 619FNX0240E0	538SNX048000	1,965	46,000	n/a	4.17	12.0	11.0
	High Wall Under Ceiling	2 2	A B	619ENX0180E0 619CNX0240E0AC +	538SNX048000	1,960	47,000	n/a	4.25	12.0	11.0
	High Wall Cassette	2 2	A B	619ENX0180E0 619FNX0240E0	538SNX048000	2,010	46,000	n/a	4.23	12.0	10.9
	High Wall Under Ceiling Cassette	2 1 1	A B B	619ENX0180E0 619CNX0240E0AC + 619FNX0240E0	538SNX048000	1,985	46,000	n/a	4.27	12.0	10.8
	Under Ceiling Under Ceiling High Wall	2 1 1	A B B	619CNX0240E0AC + 619CNX0240E0AC + 619ENX0180E0	538SNX048000	1,980	47,000	n/a	4.37	12.0	10.8

Legend

* Air Conditioning & Refrigeration Institute

\+ Unit must be reconfigured for 1 1/2 ton (18,000 Btuh) operation. Refer to installations included with the fan coil unit for more details.

Notes:

1) ARI rating conditions is 80 deg F db, 67 deg F wb air entering evaporator and 95 deg F db air entering condenser.
2) Total kW is for total system, including compressor and outdoor and indoor fan motors.
3) Ratings are based on 25 ft of interconnecting refrigerent lines.
4) All system ratings are based on fan coil units operating at high fan speed. Consult Physical Data tables for airflows at all available fan speeds.

ARI* Capacities Multi Split Applications

Nominal Capacity	Fan Coils	Qty	Circuit	Indoor Section	Outdoor Section	Std. CFM	Net Cooling BTUH		Total kW	SEER	EER
4 Tons Cont	Under Ceiling Under Ceiling Cassette	2 1 1	A B B	619CNX0240E0AC + 619CNX0240E0AC + 619FNX0240E0	538SNX048000	2025	47,000		4.46	12.0	10.5
	Under Ceiling Cassette	2 2	A B	619CNX0240E0AC + 619FNX0240E0	538SNX048000	2025	47,000		4.42	12.0	10.6
	Under Ceiling Cassette High Wall	2 1 1	A B B	619CNX0240E0AC + 619FNX0240E0 619ENX0180E0	538SNX048000	2005	47,000		4.36	12.0	10.8
	Cassette Cassette High Wall	2 1 1	A B B	619FNX0240E0 619FNX0240E0 619ENX0180E0	538SNX048000	2055	46,000		4.34	12.0	10.6
	Cassette Cassette Under Ceiling	2 1 1	A B B	619FNX0240E0 619FNX0240E0 619CNX0240E0AC +	538SNX048000	2075	46,000		4.44	12.0	10.4
	Cassette Under Ceiling High Wall	2 1 1	A B B	619FNX0240E0 619CNX0240E0AC + 619ENX0180E0	538SNX048000	2030	46,000		4.35	12.0	10.4
	High Wall Cassette	2 1	A B	619ENX0180E0 619FNX0360E0	538SNX048000	1875	47,000		4.23	12.0	11.1
	High Wall Under Ceiling	2 1	A B	619ENX0180E0 619CNX0240E0AC	538SNX048000	1560	45,800		4.10	12.0	11.2
	Under Ceiling Cassette	2 1	A B	619CNX0240E0AC + 619FNX0360E0	538SNX048000	1915	48,000		4.42	12.0	10.9
	Under Ceiling High Wall	2 1	A B	619CNX0240E0AC + 619ENX0240E0	538SNX048000	1550	46,800		4.31	12.0	10.9
	Under Ceiling Cassette High Wall	1 1 1	A A B	619CNX0240E0AC + 619FNX0240E0 619ENX0240E0	538SNX048000	1575	45,800		4.33	12.0	10.6
	Cassette Under Ceiling	2 1	A B	619FNX0240E0 619CNX0240E0AC	538SNX048000	1650	45,800		4.27	12.0	10.7
	High Wall Cassette	1 1	A B	619ENX0240E0 619FNX0360E0	538SNX048000	1465	46,800		4.29	12.0	10.9
	High Wall Under Ceiling	1 1	A B	619ENX0240E0 619CNX0240E0AC	538SNX048000	1150	45,600		4.16	12.0	11.0

Legend

01/04/02

* Air Conditioning & Refrigeration Institute

\+ Unit must be reconfigured for 1 1/2 ton (18,000 Btuh) operation. Refer to installations included with the fan coil unit for more details.

Notes:

1) ARI rating conditions is 80 deg F db, 67 deg F wb air entering evaporator and 95 deg F db air entering condenser.
2) Total kW is for total system, including compressor and outdoor and indoor fan motors.
3) Ratings are based on 25 ft of interconnecting refrigerent lines.
4) All system ratings are based on fan coil units operating at high fan speed. Consult Physical Data tables for airflows at all available fan speeds.

APPLICATION DATA

1. Unit selection

Select equipment to either match or be slightly less than anticipated peak cooling load. This provides better humidity control, fewer unit cycles, and less part-load operation. Heating and cooling design loads must both be checked. To meet heating requirements, calculate booster heater in addition to heat pump capacity. Since indoor unit is off during defrost cycles, it is not necessary for booster heater to meet
total heating requirement. For units used in spaces with high sensible loads, base equipment selection on unit sensible load, not on total anticipated load. Adjust for anticipated room wet bulb temperature to avoid undersizing equipment. Heating load using outdoor air must be checked in addition to cooling load. Heating load of outdoor air can greatly reduce heating capability. When selecting equipment that has outdoor air introduced into the unit, determine the mix conditions of room air and outdoor air at design conditions. The cooling capacity tables in this literature are based on 80 F edb. Adjust for actual dry-bulb and wet-bulb conditions with the required outdoor air to select the proper equipment.

2. Unit combinations and coil mixed matches

The 538A and 538B units are the only units approved for use with the 619C, E, and F duct-free split systems. The 538A and 538B units may also be used with other fan coil units in approved combinations.
The 38/40CG, 38/40CS, 38/40CS, 38SC/40CG, AND 38SB/40CS are matched systems and cannot be used with any other components
NOTE: The 619 series heat pump fan coils may also be used with 538A condensing unit to provide systems with cooling and electric heat. Refer to cooling system product literature for more details.

3. Unit mounting (outdoor)

Unit leveling — For reliable operation, units should be level in all planes.

Clearance —Adequate clearance must be provided for airflow. See dimensional drawings for proper clearances. The heat pump units are designed for free blow application. Air inlets and outlets should not be restricted. Outdoor fan external static pressure available is less than 0.1 in. wg.

Unit location — Cooling only units can be stacked 2 high. Heat pump units should not be stacked. Defrosted condensate from upper unit will re-freeze on lower unit. Units may be wall mounted, pad mounted at ground level, roof mounted, or mounted on a deck or patio. Be sure water drainage from roof will not drain directly onto the unit. Units must be mounted so that snow will not obstruct airflow and so that defrosting coil ice may drain freely from the outdoor unit drain pan. Snow and ice stands must be field fabricated and installed to meet these conditions if necessary. Contact your local representative for more details. If heat pump units are being installed near a wall, the condenser air should discharge toward the wall. This will provide inherent coil protection and the best possible sound and airflow performance. The 538C009 & 012 units should be mounted with the fan discharge pointed away from the wall.

4. Unit mounting (indoor)

Unit leveling — For reliable operation, units should be level in all planes. The ceiling-suspended fan coils may have a slight pitch, but only toward the drain connection.

Clearance — Provide adequate clearance for airflow. The unit return and discharge should not be obstructed by furniture, curtains, or anything which may cause unit short cycling or air recirculation. See base unit dimensional drawings Section #17 for required clearances.

Unit location — When selecting unit location, select a location which will provide the best air circulation for the room.

MORE INFO ON NEXT PAGE

HIGH WALL UNITS — These units should be positioned as high as possible on the wall for best air circulation. Allow adequate clearances above the unit for servicing (removing unit covers). Place the unit in the middle (horizontally) of the wall selected (if possible). Select an outside wall if available to make piping easier, and place the unit so it faces the normal location of room occupants.

CEILING-SUSPENDED UNITS — These units should be mounted near the ceiling and against a wall. The unit should be centered (horizontally) on the wall for best performance. Locating the unit on an outside wall will make piping easier, but units may also be mounted away from a wall if desired. (If the unit is mounted away from a wall, the rear panel of the unit may need a field-supplied trim strip for improved appearance.) Locate the fan coil return over an area that is not normally occupied for quietest operation. Do not block air discharge for a minimum of 15 ft to prevent dumping of cold air and drafts.

IN-CEILING CASSETTE UNITS — These units should be mounted in the ceiling, preferably near the center of the room. If the unit must be mounted near a wall, close the air discharge on the blocked side(s). (Up to 2 sides may be blocked.) Locate the control box away from the blocked side(s).

CONSOLE UNITS ---- These units should be mounted against the wall. If mounted on an interior wall the 2-way accessory kit can be installed. They may also be used as a Ceiling Suspended Unit. The unit should be centered (horizontally) on the wall for best performance. Locating the unit on an outside wall will make piping easier.

5. Mounting template

The fan coil units are furnished with a mounting template to mark the location of the mounting brackets, wiring, and refrigeration hole locations. In addition, the Under Ceiling units indicate the location of ventilation-air connections.

6. Support

Adequate support must be provided to support the weight of all fan coils. Refer to the Specifications Section #11 for fan coil weights, and the base unit dimensional drawings Section #17 for the location of mounting brackets.

7. System operating conditions

OUTDOOR UNITS	Operating limits:
Maximum Cooling Ambient (F)	125
Minimum Cooling Ambient (F) (without accessory low-ambient kit)	55
Minimum Cooling Ambient (F) (with accessory low-ambient kit)	-20
Minimum Cooling Return-Air Temperature (F)	55
Maximum Cooling Return-Air Temperature (F)	95
Maximum Heating Return-Air Temperature (F)	80/71*
Minimum Heating Return-Air Temperature (F)	55
Minimum Heating Ambient Temperature (F)	-20
Maximum Heating Ambient Temperature (F)	80
Saturated Suction Temperature Range	
Minimum (F)	-15
Maximum (F)	55
Saturated Condensing Temperature Range	
Minimum (F)	80
Maximum (F)	150
Maximum Compressor Discharge Temperature (F)	275
Minimum Discharge Superheat (F)	60

*Dry bulb/wet bulb.

MORE INFO ON NEXT PAGE

FAN COIL UNITS

CONDITION	619E	619C	619F	619G	619H
Maximum Room Temperature (F)	84	84	95		
Minimum Room Temperature (F)	64	64	55		
Maximum Return Air (F)					
Dry-Bulb	85	85	85		
Wet-Bulb	72	72	72		
Minimum Return Air (F)	28	28	28		
Maximum Saturated Suction Temperature (F)	55	55	55		
Minimum Saturated Suction Temperature (F)	27	27	27		

8. Low-ambient operation

Units can operate in cooling down to 55 F under all conditions without a low-ambient kit. Units equipped with accessory low-ambient kits should also be equipped with wind baffle, isolation relay, and crankcase heater (scroll units).

Winter Start Kit --- The use of a winter start control may extend the operating range, generally to 35 F or 40 F, without the addition of the Low Ambient Kit. Winter Start bypasses the low pressure switch for 3 minutes and is not required on the 538C009 & 012.

Freezestat — Freeze-up protection is provided on all duct-free fan coil units.

Crankcase heater — Scroll compressor units with low-ambient control or scroll compressor units in long-line applications should be equipped with crankcase heaters to prevent refrigerant migration during compressor off cycle.

9. Metering devices

538D009 & 012 units — The538D009 & 012 units have capillary tubes for refrigerant metering (in both cooling and heating) located in the outdoor unit. These units may only be used with 619E fan coils of the same size.

38CG, CS, SC, & SB --- The 38CG, CS, SC, & SB units have capillary tubes for refrigerant metering (in both cooling and heating) located in the outdoor unit.

538B & 538D018 & 024 units — The 538B/D units use a piston-type metering device located in the indoor unit (for cooling) and in the outdoor liquid service valve (for heating). Pistons function as check valves in addition to being metering devices.

NOTE: All duct-free split systems that use Chattleff style AccuRater pistons use Type ‘‘B’’. **DO NOT** mix Type ‘‘A’’ and Type ‘‘B’’ pistons. See Long-Lines Applications Section #15 for changes in piston sizes due to long lines.

10. Drain connections

Install drains to meet local sanitation codes. If adequate gravity drainage cannot be provided, unit should be equipped with accessory condensate pump.

NOTE: The 619F units have a condensate pump installed as standard from the factory. High wall fan coil units may use either standard or high lift condensate pumps. High lift pumps have a 10 ft lift, and standard high wall and all other fan coil unit condensate pumps have a lift capability of 20 in. lift above the condensate pan level. See base unit dimensional drawings Section#17 for drain locations and sizes.

NOTE: High wall fan coil units have internal condensate traps. All other fan coil units require a field supplied external condensate trap. Drain connections may be routed through alternate locations on most fan coils. See base unit dimensional drawings Section #17 for possible alternate locations.

MORE INFO ON NEXT PAGE

11. Fresh air and ducting

a. The ceiling-suspended fan coil units may bring in up to 30% fresh air. The percentage of air allowable is calculated based on the unit high speed cfm. Air quantities above this level may exceed compressor maximum saturated suction temperatures. A power ventilation kit is available to overcome ventilation duct static. See Power Ventilation Kit Available Static Pressure table below.

b. The in-ceiling cassette fan coil units may bring in up to 20% fresh air. This 20% maximum should not be exceeded. A power ventilation kit is available to overcome ventilation duct static. See Power Ventilation Kit Available Static Pressure table below.

c. The in-ceiling cassette fan coil units may have an extension duct installed. See Static Capability and Design Considerations figures on this page.

POWER VENTILATION KIT AVAILABLE STATIC PRESSURE

FAN HP	WATTS	RPM	VOLTAGE	CFM AT STATIC PRESSURE (in. wg)								DUCT DIA. (in.)	
				0	⅛	¼	⅜	½	¾	1	1½		
1/15	150	2700	208/230	370	335	318	298	256	219	189	112	6	

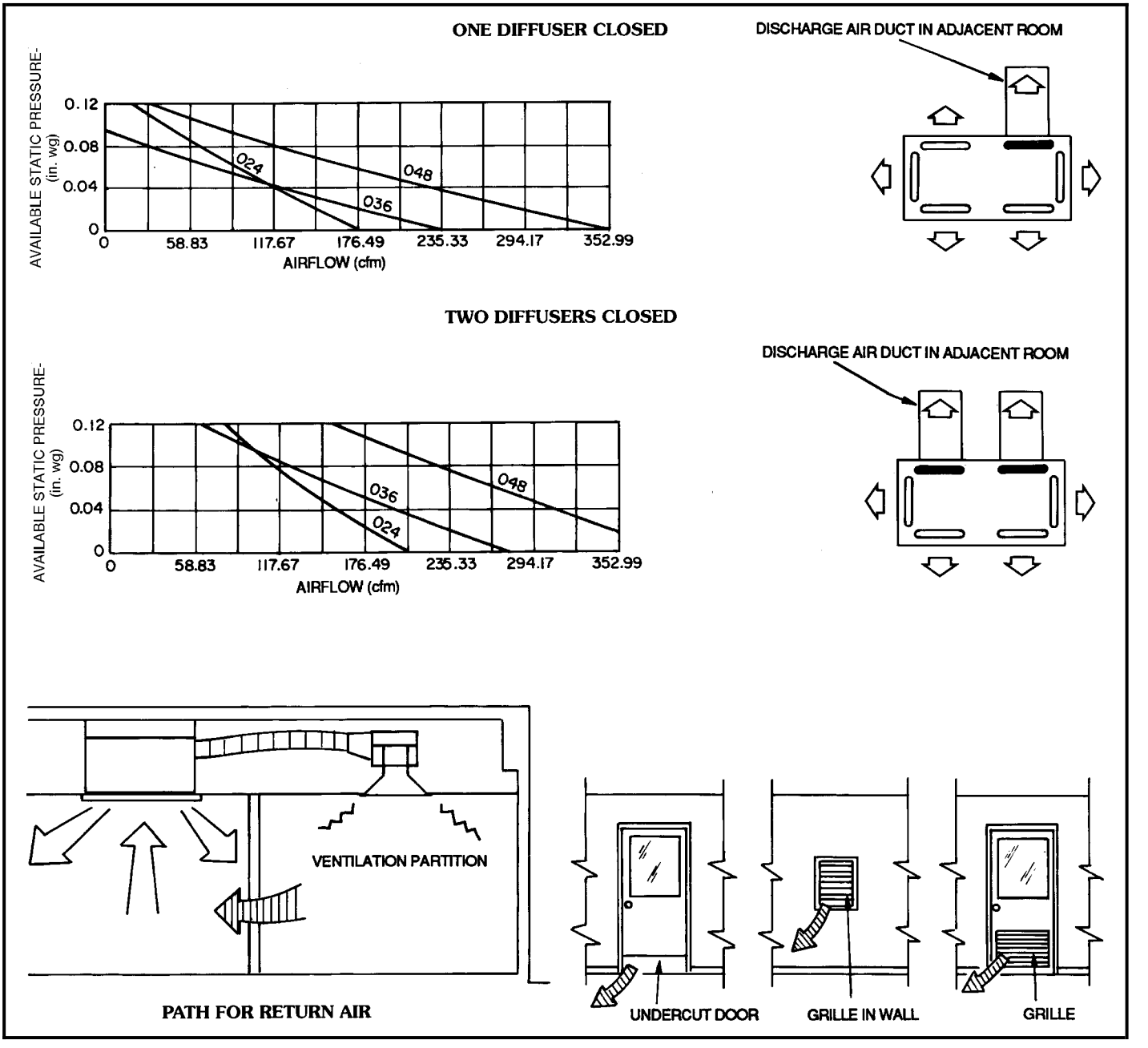

Static Capability and Design Considerations, Systems Using In-Ceiling Cassette 024-048 Fan Coil Units

Duct Free Systems - Electrical Data - High Wall Units

Model	Voltage	Voltage		Fan	Heater		System Power			Minimum
	V-Ph-60Hz	Min	Max	FLA	kW	FLA	MCA	MOCP	FLA	Wire Size
619EAX0090E0	115-1	104	127	0.41	--	--	Note #1	Note #1	0.41	14
619EAX0120E0	115-1	104	127	0.55	--	--	Note #1	Note #1	0.55	14
619ENX0120E0	208/230-1	187	253	0.23	--	--	Note #1	Note #1	0.23	14
619ENX0180E0	208/230-1	187	253	0.53	--	--	0.66	15.0	0.53	14
619ENX0240E0	208/230-1	187	253	0.53	--	--	0.66	15.0	0.53	14
619EAX0090W0	115-1	104	127	0.41	--	--	Note #1	Note #1	0.41	14
619ENX0120H0	208/230-1	187	253	0.23	0.75	3.30	Note #1	Note #1	0.23	14
619ENX0180H0	208/230-1	187	253	0.53	1.80	7.80	10.90	15.0	0.53	14
619ENX0240H0	208/230-1	187	253	0.53	1.80	7.80	10.90	15.0	0.53	14

Notes:
1) Indoor unit must be connected to outdoor unit. See outdoor unit for data.

Legend:
FLA - Full Load Amps
LRA - Locked Rotor Amps
MCA - Minimum Circuit Amps
MOCP - Maximum Overcurrent Protection Amps. (Fuse or Heating, Air Conditioning, and Refrigeration Circuit Breaker

Rev "A"

01/10/02

Duct Free Systems - Electrical Data - Under Ceiling Units

Model	Voltage	Voltage		Fan	Heater		System Power			Minimum
	V-Ph-60Hz	Min	Max	FLA	kW	FLA	MCA	MOCP	FLA	Wire Size
619CNX0240E0AC	208/230-1	187	253	0.50	--	--	0.63	15.0	0.50	14
619CNX0360E0AC	208/230-1	187	253	1.30	--	--	1.60	15.0	1.30	14
619CNX0480E0AC	208/230-1	187	253	1.60 *	--	--	2.00	15.0	1.60	14
619CNX0600E0AA	208/230-1	187	253	2.60 **	--	--	3.30	15.0	2.60	14
619CNX0240W0AC	208/230-1	187	253	0.50	2.00	8.66	9.29	15.0	11.29	14
619CNX0360W0AC	208/230-1	187	253	1.30	3.00	13.00	17.70	20.0	14.30	14
619CNX0480W0AC	208/230-1	187	253	1.60 *	4.00	17.40	23.80	25.0	19.00	12
619CNX0600W0AA	208/230-1	187	253	2.60 **	5.00	2.17	28.70	30.0	24.30	10

Legend:
* One fan is 1.1 Amps, the second fan is 0.5 Amps
** Two fans each operating at 1.3 Amps
FLA - Full Load Amps
LRA - Locked Rotor Amps
MCA - Minimum Circuit Amps
MOCP - Maximum Overcurrent Protection Amps. (Fuse or Heating, Air Conditioning, and Refrigeration Circuit Breaker)

Rev /
01/10/02

Duct Free Systems - Electrical Data - Console Units

Model	Voltage	Voltage		Fan	Heater		Power			Minimum
	V-Ph-60Hz	Min	Max	FLA	kW	FLA	MCA	MOCP	FLA	Wire Size
40CG-018---301RM	208/230-1	187	253	0.6	--	--	0.8	15	0.6	14
40CG-024---301RM	208/230-1	187	253	0.6	--	--	0.8	15	0.6	14
40CG-030---301RM	208/230-1	187	253	0.6	--	--	0.8	15	0.6	14
40CS-018---301RM	208/230-1	187	253	0.6	2.0	9.0	11.5	25	8.9	14
40CS-024---301RM	208/230-1	187	253	0.6	3.0	13.6	17.0	35	13.1	10
40CS-030---301RM	208/230-1	187	253	0.6	3.0	13.6	17.0	40	13.1	10

Legend:

* One fan is 1.1 Amps, the second fan is 0.5 Amps

** Two fans each operating at 1.3 Amps

FLA - Full Load Amps

LRA - Locked Rotor Amps

MCA - Minimum Circuit Amps

MOCP - Maximum Overcurrent Protection Amps. (Fuse or Heating, Air Conditioning, and Refrigeration Circuit Breaker)

Rev /

01/10/02

Duct Free Systems - Electrical Data - Cassette Units

Model	Voltage	Voltage		Fan	Heater		System Power			Minimum
	V-Ph-60Hz	Min	Max	FLA	kW	FLA	MCA	MOCP	FLA	Wire Size
619FNX0240E0	208/230-1	187	253	0.44	--	--	0.55	15.0	0.44	14
619FNX0360E0	208/230-1	187	253	.44/.44	--	--	1.10	15.0	0.88	14
619FNX0240W0	208/230-1	187	253	0.44	1.80 *	7.50	0.6/9.4	15/15	7.94	14/14
619FNX0360W0	208/230-1	187	253	0.78	2.70 *	11.25	1.0/15.0	15/15	12.80	14/14
619FNX0480W0	208/230-1	187	253	1.04	2.70 *	11.25	1.3/15.0	15/15	12.03	14/14

Notes:

1) Two MCA, MOCP, and minimum wire size values are shown for units with separate unit and heater circuits.
The first value applies to the unit circuit and the second applies to the heater circuit.
2) Two fan motors are used on the FNX0360E, FNX0360W & FNX0480W

Legend

* Separate unit and heater circuits required
FLA - Full Load Amps
LRA - Locked Rotor Amps
MCA - Minimum Circuit Amps
MOCP - Maximum Overcurrent Protection Amps. (Fuse or Heating, Air Conditioning, and Refrigeration Circuit Breaker

Rev "A"
01/10/02

Duct Free Systems - Electrical Data - Condensers

Model	Voltage	Voltage		Compressor		Fan	Power Supply		
	V-Ph-60Hz	Min	Max	RLA	LRA	FLA	MCA	MOCP	FLA
538CAX009000	115-1	104	127	7.6	46.5	0.76	12.1 *	15 *	8.36
538CAX012000	115-1	104	127	10.9	63.0	0.88	17.00	15 *	11.78
538CNX012000	208/230-1	187	253	5.5	30.0	0.35	8.5 *	15 *	5.85
538DAX009000	115-1-60	104	127	9.0	45.0	0.76	11.2 *	15 *	9.76
538DNX012000	208/230-1	187	253	5.8	30.0	0.35	8.9 *	15 *	6.15
538DNX018000	208/230-1	187	253	9.8	49.0	0.70	13.00	20.0	10.50
538DNX024000	208/230-1	187	253	11.7	61.0	0.70	15.30	25.0	12.40
538ANX018000	208/230-1	187	253	8.0	49.0	0.70	10.70	15.0	8.70
538ANX024000	208/230-1	187	253	12.9	62.5	0.70	16.80	25.0	13.60
538ANX030000	208/230-1	187	253	15.0	76.0	0.70	19.50	30.0	15.70
538ANX036000	208/230-1	187	253	17.9	88.0	0.70	23.10	40.0	18.60
538APX036000	208/230-3	187	253	11.4	77.0	0.70	15.00	25.0	12.10
538AEX036000	460-3	414	508	5.7	38.5	0.40	7.50	15.0	6.10
538ANX048000	208/230-1	187	253	26.4	129.0	1.45	34.50	60.0	27.85
538APX048000	208/230-3	187	253	15.0	99.0	1.45	20.20	35.0	16.45
538AEX048000	460-3	414	508	8.2	49.5	0.80	11.10	15.0	9.00
538ANX060000	208/230-1	187	253	28.9	165.0	1.45	36.60	60.0	30.35
538APX060000	208/230-3	187	253	16.0	125.0	1.45	21.50	35.0	17.45
538AEX060000	460-3	414	508	8.0	62.5	0.80	10.80	15.0	8.80
538JNX018000	208/230-1	187	253	10.7	47.0	0.70	14.10	25	11.40
538JNX024000	208/230-1	187	253	13.2	59.0	0.70	17.20	30	13.90
538JNX030000	208/230-1	187	253	15.7	73.0	0.70	20.30	35	16.40
538JNX036000	208/230-1	187	253	16.4	86.7	0.70	21.20	30	17.10
538JNX048000	208/230-1	187	253	24.3	131.0	1.45	31.80	50	25.75
538JNX060000	208/230-1	187	253	28.6	170.0	1.45	37.20	65	30.05
538SNX024000	208/230-1	187	253	12.9	62.5	0.70	16.80	25.0	13.60
538BNX018000	208/230-1	187	253	9.8	49.0	0.70	13.00	20.0	10.50
538BNX024000	208/230-1	187	253	11.7	61.0	0.70	15.30	25.0	12.40
538BNX030000	208/230-1	187	253	13.5	76.0	0.70	17.60	30.0	14.20
538BNX036000	208/230-1	187	253	17.9	90.5	0.70	23.10	40.0	18.60
538BPX036000	208/230-3	187	253	11.2	66.0	1.45	15.50	25.0	12.70
538BEX036000	460-3	414	508	5.2	35.0	0.80	7.30	15.0	6.00
538BNX048000	208/230-1	187	253	23.2	110.0	1.45	30.50	50.0	24.70
538BPX048000	208/230-3	187	253	15.3	92.0	1.45	20.60	35.0	16.80
538BEX048000	460-3-60	414	508	7.3	46.0	0.80	9.90	15.0	8.10
538BNX060000	208/230-1	187	253	31.7	135.0	1.45	42.00	60.0	33.20
538BPX060000	208/230-3	187	253	20.4	105.0	1.45	27.00	45.0	21.90
538BEX060000	460-3	414	508	10.8	55.0	0.80	15.00	25.0	11.60
38CG018-3	208/230-1	187	253	7.4	48.0	1.50	11.40	15	8.90
38CG024-3	208/230-1	187	253	9.6	61.0	1.50	14.10	20	11.10
38CG030-3	208/230-1	187	253	14.2	94.0	1.50	19.80	30	15.70
38CS018-3	208/230-1	187	253	7.4	48.0	1.50	22.10	25	8.90
38CS024-3	208/230-1	187	253	9.6	61.0	1.50	30.40	35	11.10
38CS030-3	208/230-1	187	253	14.2	94.0	1.50	36.10	40	15.70
38SC030-3	208/230-1	187	253	14.2 x (2)	94 x (2)	1.50	19.8 x (2)	30 x (2)	1.50
38SB030-3	208/230-1	187	253	14.2 x (2)	94 x (2)	1.50	36.1 x (2)	40 x (2)	1.50

Note

* MCA and MOCP are for both indoor and outdoor units (system)

Legend

* Separate unit and heater circuits required
FLA - Full Load Amps
LRA - Locked Rotor Amps
MCA - Minimum Circuit Amps
MOCP - Maximum Overcurrent Protection Amps. (Fuse or Heating, Air Conditioning, and Refrigeration Circuit Breaker)

Rev "A"
01/10/02

Duct Free Systems - System Charge

Cooling Only High Wall

Indoor Unit	Outdoor Unit	Charge Lbs Note #1
619EAX0090E0	538CAX009000	1.5
619EAX0120E0	538CAX012000	1.8
619ENX0120E0	538CNX012000	1.8
619ENX0180E0	538ANX018000	4.6
	538JNX018000	3.8
619ENX0240E0	538JNX018000	3.8
	538ANX024000	6.0
	538JNX024000	4.4

Cooling Only Under Ceiling

Indoor Unit	Outdoor Unit	Charge Lbs Note #1
619CNX0240E0EAC ^	538ANX018000	3.7
	538JNX018000	4.3
619CNX0240E0EAC	538ANX024000	6.3
	538JNX024000	4.9
619CNX0360E0EAC	538ANX030000	7.1
	538JNX030000	5.2
619CNX0360E0EAC	538ANX036000	5.4
	538APX036000	5.4
	538AEX036000	5.4
	538JNX036000	5.0
619CNX0480E0EAC	538ANX048000	7.4
	538APX048000	7.4
	538AEX048000	7.4
	538JNX048000	7.1
619CNX0600E0EAA	538ANX060000	13.6
	538APX060000	13.6
	538AEX060000	13.6
	538JNX060000	13.6

Cooling Only Cassette

Indoor Unit	Outdoor Unit	Charge Lbs Note #1
619FNX0240E0	538ANX018000	4.8
	538JNX018000	3.9
619FNX0360E0	538ANX024000	5.4
	538JNX024000	4.6
	538ANX030000	7.7
	538JNX030000	5.6
	538ANX036000	6.0
	538APX036000	6.0
	538AEX036000	6.0
	538JNX036000	6.0

Cooling Only Console

Indoor Unit	Outdoor Unit	System Charge Lbs
40CG-018---301RM	38CG-018---301	5.2
40CG-024---301RM	38CG-024---301	4.7
40CG-030---301RM	38CG-030---301	6.2

Cooling Only Console Multi Zone

Indoor Unit	Outdoor Unit	System Charge Lbs
40CG-030---301RM	38SB-030---3	12.4

Legend:

** Combination may require additional charge
^ The 024 size unit shown is configured as an 018 size unit changing the motor speed fan tap plug.

Note:

1) Charge is based on 25' of interconnecting tubing. Charge may need to be added for longer runs.
2) Cooling units shipped with a full charge. Heat Pumps are shipped with a holding charge

Heat Pump High Wall

Indoor Unit	Outdoor Unit	Charge Lbs Note #1
619EAX0090W0	538DAX009000	1.5
619ENX0120H0	538DNX012000	2.0
619ENX0180H0	538DNX018000	4.95
619ENX0240H0	538DNX024000	5.1

Heat Pump Under Ceiling

Indoor Unit	Outdoor Unit	Charge Lbs Note #1
619CNX0240W0AC	538BNX018000	4.3
	538BNX024000	6.3
619CNX0360W0AC	538BNX030000	6.4
	538BNX036000	7.5
	538BPX036000	8.7
	538BEX036000	8.7
619CNX0480W0AC	538BNX048000	10.0
	538BPX048000	10.0
	538BEX048000	10.0
619CNX0600W0AC	538BNX060000	11.9
	538BPX060000	11.9
	538BEX060000	11.9

Heat Pump Cassette

Indoor Unit	Outdoor Unit	Charge Lbs Note #1
619FNX0240W0	538BNX018000	5.5
619FNX0360W0	538BNX024000	5.9
	538BNX030000	5.9
619FNX0480W0	538BNX036000	5.9
	538BPX036000	8.0
	538BEX036000	8.0

Heat Pump Console

Indoor Unit	Outdoor Unit	System Charge Lbs
40CS-018---301RM	38CS-018---301	5.2
40CS-024---301RM	38CS-024---301	4.7
40CS-030---301RM	38CS-030---301	6.2

Heat Pump Console Multi Zone

Indoor Unit	Outdoor Unit	System Charge Lbs
40CS-030---301RM	38SB-030-3	12.4

Heat Cool Under Ceiling

COOLING WITH ELECTRIC HEAT

Indoor Unit	Outdoor Unit	Charge Lbs Note #1
619CNX0240W0AC	538ANX018000	3.6
	538ANX024000	6.2 **
	538JNX018000	4.3
	538JNX024000	4.9
619CNX0360W0AC	538ANX030000	5.6
	538ANX036000	5.6
	538APX036000	5.6
	538AEX036000	5.6
	538JNX030000	5.2
	538JNX036000	5
619CNX0480W0AC	538ANX048000	7.4
	538APX048000	7.4
	538AEX048000	7.4
	538JNX048000	7.1
619CNX0600W0AC	538ANX060000	13.6
	538APX060000	13.6
	538AEX060000	13.6
	538JNX060000	8.7

Heat Cool Cassette

COOLING WITH ELECTRIC HEAT

Indoor Unit	Outdoor Unit	Charge Lbs Note #1
619FNX0240W0	538ANX018000	5.8 **
	538JNX018000	3.9
619FNX0360W0	538ANX024000	4.8
	538JNX024000	4.6
	538ANX030000	5.2
	538JNX030000	5.6
619FNX0480W0	538ANX036000	5.8
	538APX036000	5.8
	538AEX036000	5.8
	538JNX036000	6

Duct Free Systems - System Charge

Cooling Only High Wall

Indoor Unit	Outdoor Unit	Charge Lbs Note #1
619EAX0090E0	538CAX009000	1.5
619EAX0120E0	538CAX012000	1.8
619ENX0120E0	538CNX012000	1.8
619ENX0180E0	538ANX018000	4.6
	538JNX018000	3.8
619ENX0240E0	538JNX018000	3.8
	538ANX024000	6.0
	538JNX024000	4.4

Cooling Only Under Ceiling

Indoor Unit	Outdoor Unit	Charge Lbs Note #1
619CNX0240E0EAC ^	538ANX018000	3.7
	538JNX018000	4.3
619CNX0240E0EAC	538ANX024000	6.3
	538JNX024000	4.9
619CNX0360E0EAC	538ANX030000	7.1
	538JNX030000	5.2
619CNX0360E0EAC	538ANX036000	5.4
	538APX036000	5.4
	538AEX036000	5.4
	538JNX036000	5.0
619CNX0480E0EAC	538ANX048000	7.4
	538APX048000	7.4
	538AEX048000	7.4
	538JNX048000	7.1
619CNX0600E0EAA	538ANX060000	13.6
	538APX060000	13.6
	538AEX060000	13.6
	538JNX060000	13.6

Cooling Only Cassette

Indoor Unit	Outdoor Unit	Charge Lbs Note #1
619FNX0240E0	538ANX018000	4.8
	538JNX018000	3.9
619FNX0360E0	538ANX024000	5.4
	538JNX024000	4.6
	538ANX030000	7.7
	538JNX030000	5.6
	538ANX036000	6.0
	538APX036000	6.0
	538AEX036000	6.0
	538JNX036000	6.0

Cooling Only Console

Indoor Unit	Outdoor Unit	System Charge Lbs
40CG-018---301RM	38CG-018---301	5.2
40CG-024---301RM	38CG-024---301	4.7
40CG-030---301RM	38CG-030---301	6.2

Cooling Only Console Multi Zone

Indoor Unit	Outdoor Unit	System Charge Lbs
40CG-030---301RM	38SB-030---3	12.4

Legend:

** Combination may require additional charge

^ The 024 size unit shown is configured as an 018 size unit changing the motor speed fan tap plug.

Note:

1) Charge is based on 25' of interconnecting tubing. Charge may need to be added for longer runs.

2) Cooling units shipped with a full charge. Heat Pumps are shipped with a holding charge

Heat Pump High Wall

Indoor Unit	Outdoor Unit	Charge Lbs Note #1
619EAX0090W0	538DAX009000	1.5
619ENX0120H0	538DNX012000	2.0
619ENX0180H0	538DNX018000	4.95
619ENX0240H0	538DNX024000	5.1

Heat Pump Under Ceiling

Indoor Unit	Outdoor Unit	Charge Lbs Note #1
619CNX0240W0AC	538BNX018000	4.3
	538BNX024000	6.3
619CNX0360W0AC	538BNX030000	6.4
	538BNX036000	7.5
	538BPX036000	8.7
	538BEX036000	8.7
619CNX0480W0AC	538BNX048000	10.0
	538BPX048000	10.0
	538BEX048000	10.0
619CNX0600W0AC	538BNX060000	11.9
	538BPX060000	11.9
	538BEX060000	11.9

Heat Pump Cassette

Indoor Unit	Outdoor Unit	Charge Lbs Note #1
619FNX0240W0	538BNX018000	5.5
619FNX0360W0	538BNX024000	5.9
	538BNX030000	5.9
619FNX0480W0	538BNX036000	5.9
	538BPX036000	8.0
	538BEX036000	8.0

Heat Pump Console

Indoor Unit	Outdoor Unit	System Charge Lbs
40CS-018---301RM	38CS-018---301	5.2
40CS-024---301RM	38CS-024---301	4.7
40CS-030---301RM	38CS-030---301	6.2

Heat Pump Console Multi Zone

Indoor Unit	Outdoor Unit	System Charge Lbs
40CS-030---301RM	38SB-030-3	12.4

Heat Cool Under Ceiling

COOLING WITH ELECTRIC HEAT

Indoor Unit	Outdoor Unit	Charge Lbs Note #1
619CNX0240W0AC	538ANX018000	3.6
	538ANX024000	6.2 **
	538JNX018000	4.3
	538JNX024000	4.9
619CNX0360W0AC	538ANX030000	5.6
	538ANX036000	5.6
	538APX036000	5.6
	538AEX036000	5.6
	538JNX030000	5.2
	538JNX036000	5
619CNX0480W0AC	538ANX048000	7.4
	538APX048000	7.4
	538AEX048000	7.4
	538JNX048000	7.1
619CNX0600W0AC	538ANX060000	13.6
	538APX060000	13.6
	538AEX060000	13.6
	538JNX060000	8.7

Heat Cool Cassette

COOLING WITH ELECTRIC HEAT

Indoor Unit	Outdoor Unit	Charge Lbs Note #1
619FNX0240W0	538ANX018000	5.8 **
	538JNX018000	3.9
619FNX0360W0	538ANX024000	4.8
	538JNX024000	4.6
	538ANX030000	5.2
	538JNX030000	5.6
619FNX0480W0	538ANX036000	5.8
	538APX036000	5.8
	538AEX036000	5.8
	538JNX036000	6

Duct Free Systems - System Charge

Cooling Only High Wall

Indoor Unit	Outdoor Unit	Charge Lbs Note #1
619EAX0090E0	538CAX009000	1.5
619EAX0120E0	538CAX012000	1.8
619ENX0120E0	538CNX012000	1.8
619ENX0180E0	538ANX018000	4.6
	538JNX018000	3.8
619ENX0240E0	538JNX018000	3.8
	538ANX024000	6.0
	538JNX024000	4.4

Cooling Only Under Ceiling

Indoor Unit	Outdoor Unit	Charge Lbs Note #1
619CNX0240E0EAC ^	538ANX018000	3.7
	538JNX018000	4.3
619CNX0240E0EAC	538ANX024000	6.3
	538JNX024000	4.9
619CNX0360E0EAC	538ANX030000	7.1
	538JNX030000	5.2
619CNX0360E0EAC	538ANX036000	5.4
	538APX036000	5.4
	538AEX036000	5.4
	538JNX036000	5.0
619CNX0480E0EAC	538ANX048000	7.4
	538APX048000	7.4
	538AEX048000	7.4
	538JNX048000	7.1
619CNX0600E0EAA	538ANX060000	13.6
	538APX060000	13.6
	538AEX060000	13.6
	538JNX060000	13.6

Cooling Only Cassette

Indoor Unit	Outdoor Unit	Charge Lbs Note #1
619FNX0240E0	538ANX018000	4.8
	538JNX018000	3.9
619FNX0360E0	538ANX024000	5.4
	538JNX024000	4.6
	538ANX030000	7.7
	538JNX030000	5.6
	538ANX036000	6.0
	538APX036000	6.0
	538AEX036000	6.0
	538JNX036000	6.0

Cooling Only Console

Indoor Unit	Outdoor Unit	System Charge Lbs
40CG-018---301RM	38CG-018---301	5.2
40CG-024---301RM	38CG-024---301	4.7
40CG-030---301RM	38CG-030---301	6.2

Cooling Only Console Multi Zone

Indoor Unit	Outdoor Unit	System Charge Lbs
40CG-030---301RM	38SB-030---3	12.4

Legend:

** Combination may require additional charge

^ The 024 size unit shown is configured as an 018 size unit changing the motor speed fan tap plug.

Note:

1) Charge is based on 25' of interconnecting tubing. Charge may need to be added for longer runs.

2) Cooling units shipped with a full charge. Heat Pumps are shipped with a holding charge

Heat Pump High Wall

Indoor Unit	Outdoor Unit	Charge Lbs Note #1
619EAX0090W0	538DAX009000	1.5
619ENX0120H0	538DNX012000	2.0
619ENX0180H0	538DNX018000	4.95
619ENX0240H0	538DNX024000	5.1

Heat Pump Under Ceiling

Indoor Unit	Outdoor Unit	Charge Lbs Note #1
619CNX0240W0AC	538BNX018000	4.3
	538BNX024000	6.3
619CNX0360W0AC	538BNX030000	6.4
	538BNX036000	7.5
	538BPX036000	8.7
	538BEX036000	8.7
619CNX0480W0AC	538BNX048000	10.0
	538BPX048000	10.0
	538BEX048000	10.0
619CNX0600W0AC	538BNX060000	11.9
	538BPX060000	11.9
	538BEX060000	11.9

Heat Pump Cassette

Indoor Unit	Outdoor Unit	Charge Lbs Note #1
619FNX0240W0	538BNX018000	5.5
619FNX0360W0	538BNX024000	5.9
	538BNX030000	5.9
619FNX0480W0	538BNX036000	5.9
	538BPX036000	8.0
	538BEX036000	8.0

Heat Pump Console

Indoor Unit	Outdoor Unit	System Charge Lbs
40CS-018---301RM	38CS-018---301	5.2
40CS-024---301RM	38CS-024---301	4.7
40CS-030---301RM	38CS-030---301	6.2

Heat Pump Console Multi Zone

Indoor Unit	Outdoor Unit	System Charge Lbs
40CS-030---301RM	38SB-030-3	12.4

Heat Cool Under Ceiling

COOLING WITH ELECTRIC HEAT

Indoor Unit	Outdoor Unit	Charge Lbs Note #1
619CNX0240W0AC	538ANX018000	3.6
	538ANX024000	6.2 **
	538JNX018000	4.3
	538JNX024000	4.9
619CNX0360W0AC	538ANX030000	5.6
	538ANX036000	5.6
	538APX036000	5.6
	538AEX036000	5.6
	538JNX030000	5.2
	538JNX036000	5
619CNX0480W0AC	538ANX048000	7.4
	538APX048000	7.4
	538AEX048000	7.4
	538JNX048000	7.1
619CNX0600W0AC	538ANX060000	13.6
	538APX060000	13.6
	538AEX060000	13.6
	538JNX060000	8.7

Heat Cool Cassette

COOLING WITH ELECTRIC HEAT

Indoor Unit	Outdoor Unit	Charge Lbs Note #1
619FNX0240W0	538ANX018000	5.8 **
	538JNX018000	3.9
619FNX0360W0	538ANX024000	4.8
	538JNX024000	4.6
	538ANX030000	5.2
	538JNX030000	5.6
619FNX0480W0	538ANX036000	5.8
	538APX036000	5.8
	538AEX036000	5.8
	538JNX036000	6

Duct Free Systems - System Charge

Cooling Only High Wall

Indoor Unit	Outdoor Unit	Charge Lbs Note #1
619EAX0090E0	538CAX009000	1.5
619EAX0120E0	538CAX012000	1.8
619ENX0120E0	538CNX012000	1.8
619ENX0180E0	538ANX018000	4.6
	538JNX018000	3.8
619ENX0240E0	538JNX018000	3.8
	538ANX024000	6.0
	538JNX024000	4.4

Cooling Only Under Ceiling

Indoor Unit	Outdoor Unit	Charge Lbs Note #1
619CNX0240E0EAC ^	538ANX018000	3.7
	538JNX018000	4.3
619CNX0240E0EAC	538ANX024000	6.3
	538JNX024000	4.9
619CNX0360E0EAC	538ANX030000	7.1
	538JNX030000	5.2
619CNX0360E0EAC	538ANX036000	5.4
	538APX036000	5.4
	538AEX036000	5.4
	538JNX036000	5.0
619CNX0480E0EAC	538ANX048000	7.4
	538APX048000	7.4
	538AEX048000	7.4
	538JNX048000	7.1
619CNX0600E0EAA	538ANX060000	13.6
	538APX060000	13.6
	538AEX060000	13.6
	538JNX060000	13.6

Cooling Only Cassette

Indoor Unit	Outdoor Unit	Charge Lbs Note #1
619FNX0240E0	538ANX018000	4.8
	538JNX018000	3.9
619FNX0360E0	538ANX024000	5.4
	538JNX024000	4.6
	538ANX030000	7.7
	538JNX030000	5.6
	538ANX036000	6.0
	538APX036000	6.0
	538AEX036000	6.0
	538JNX036000	6.0

Cooling Only Console

Indoor Unit	Outdoor Unit	System Charge Lbs
40CG-018---301RM	38CG-018---301	5.2
40CG-024---301RM	38CG-024---301	4.7
40CG-030---301RM	38CG-030---301	6.2

Cooling Only Console Multi Zone

Indoor Unit	Outdoor Unit	System Charge Lbs
40CG-030---301RM	38SB-030---3	12.4

Legend:

** Combination may require additional charge

^ The 024 size unit shown is configured as an 018 size unit changing the motor speed fan tap plug.

Note:

1) Charge is based on 25' of interconnecting tubing. Charge may need to be added for longer runs.

2) Cooling units shipped with a full charge. Heat Pumps are shipped with a holding charge

Heat Pump High Wall

Indoor Unit	Outdoor Unit	Charge Lbs Note #1
619EAX0090W0	538DAX009000	1.5
619ENX0120H0	538DNX012000	2.0
619ENX0180H0	538DNX018000	4.95
619ENX0240H0	538DNX024000	5.1

Heat Pump Under Ceiling

Indoor Unit	Outdoor Unit	Charge Lbs Note #1
619CNX0240W0AC	538BNX018000	4.3
	538BNX024000	6.3
619CNX0360W0AC	538BNX030000	6.4
	538BNX036000	7.5
	538BPX036000	8.7
	538BEX036000	8.7
619CNX0480W0AC	538BNX048000	10.0
	538BPX048000	10.0
	538BEX048000	10.0
619CNX0600W0AC	538BNX060000	11.9
	538BPX060000	11.9
	538BEX060000	11.9

Heat Pump Cassette

Indoor Unit	Outdoor Unit	Charge Lbs Note #1
619FNX0240W0	538BNX018000	5.5
619FNX0360W0	538BNX024000	5.9
	538BNX030000	5.9
619FNX0480W0	538BNX036000	5.9
	538BPX036000	8.0
	538BEX036000	8.0

Heat Pump Console

Indoor Unit	Outdoor Unit	System Charge Lbs
40CS-018---301RM	38CS-018---301	5.2
40CS-024---301RM	38CS-024---301	4.7
40CS-030---301RM	38CS-030---301	6.2

Heat Pump Console Multi Zone

Indoor Unit	Outdoor Unit	System Charge Lbs
40CS-030---301RM	38SB-030-3	12.4

Heat Cool Under Ceiling

COOLING WITH ELECTRIC HEAT

Indoor Unit	Outdoor Unit	Charge Lbs Note #1
619CNX0240W0AC	538ANX018000	3.6
	538ANX024000	6.2 **
	538JNX018000	4.3
	538JNX024000	4.9
619CNX0360W0AC	538ANX030000	5.6
	538ANX036000	5.6
	538APX036000	5.6
	538AEX036000	5.6
	538JNX030000	5.2
	538JNX036000	5
619CNX0480W0AC	538ANX048000	7.4
	538APX048000	7.4
	538AEX048000	7.4
	538JNX048000	7.1
619CNX0600W0AC	538ANX060000	13.6
	538APX060000	13.6
	538AEX060000	13.6
	538JNX060000	8.7

Heat Cool Cassette

COOLING WITH ELECTRIC HEAT

Indoor Unit	Outdoor Unit	Charge Lbs Note #1
619FNX0240W0	538ANX018000	5.8 **
	538JNX018000	3.9
619FNX0360W0	538ANX024000	4.8
	538JNX024000	4.6
	538ANX030000	5.2
	538JNX030000	5.6
619FNX0480W0	538ANX036000	5.8
	538APX036000	5.8
	538AEX036000	5.8
	538JNX036000	6

Duct Free Systems - System Charge

Cooling Only High Wall

Indoor Unit	Outdoor Unit	Charge Lbs Note #1
619EAX0090E0	538CAX009000	1.5
619EAX0120E0	538CAX012000	1.8
619ENX0120E0	538CNX012000	1.8
619ENX0180E0	538ANX018000	4.6
	538JNX018000	3.8
619ENX0240E0	538JNX018000	3.8
	538ANX024000	6.0
	538JNX024000	4.4

Cooling Only Under Ceiling

Indoor Unit	Outdoor Unit	Charge Lbs Note #1
619CNX0240E0EAC ^	538ANX018000	3.7
	538JNX018000	4.3
619CNX0240E0EAC	538ANX024000	6.3
	538JNX024000	4.9
619CNX0360E0EAC	538ANX030000	7.1
	538JNX030000	5.2
619CNX0360E0EAC	538ANX036000	5.4
	538APX036000	5.4
	538AEX036000	5.4
	538JNX036000	5.0
619CNX0480E0EAC	538ANX048000	7.4
	538APX048000	7.4
	538AEX048000	7.4
	538JNX048000	7.1
619CNX0600E0EAA	538ANX060000	13.6
	538APX060000	13.6
	538AEX060000	13.6
	538JNX060000	13.6

Cooling Only Cassette

Indoor Unit	Outdoor Unit	Charge Lbs Note #1
619FNX0240E0	538ANX018000	4.8
	538JNX018000	3.9
619FNX0360E0	538ANX024000	5.4
	538JNX024000	4.6
	538ANX030000	7.7
	538JNX030000	5.6
	538ANX036000	6.0
	538APX036000	6.0
	538AEX036000	6.0
	538JNX036000	6.0

Cooling Only Console

Indoor Unit	Outdoor Unit	System Charge Lbs
40CG-018---301RM	38CG-018---301	5.2
40CG-024---301RM	38CG-024---301	4.7
40CG-030---301RM	38CG-030---301	6.2

Cooling Only Console Multi Zone

Indoor Unit	Outdoor Unit	System Charge Lbs
40CG-030---301RM	38SB-030---3	12.4

Legend:

** Combination may require additional charge

^ The 024 size unit shown is configured as an 018 size unit changing the motor speed fan tap plug.

Note:

1) Charge is based on 25' of interconnecting tubing. Charge may need to be added for longer runs.

2) Cooling units shipped with a full charge. Heat Pumps are shipped with a holding charge

Heat Pump High Wall

Indoor Unit	Outdoor Unit	Charge Lbs Note #1
619EAX0090W0	538DAX009000	1.5
619ENX0120H0	538DNX012000	2.0
619ENX0180H0	538DNX018000	4.95
619ENX0240H0	538DNX024000	5.1

Heat Pump Under Ceiling

Indoor Unit	Outdoor Unit	Charge Lbs Note #1
619CNX0240W0AC	538BNX018000	4.3
	538BNX024000	6.3
619CNX0360W0AC	538BNX030000	6.4
	538BNX036000	7.5
	538BPX036000	8.7
	538BEX036000	8.7
619CNX0480W0AC	538BNX048000	10.0
	538BPX048000	10.0
	538BEX048000	10.0
619CNX0600W0AC	538BNX060000	11.9
	538BPX060000	11.9
	538BEX060000	11.9

Heat Pump Cassette

Indoor Unit	Outdoor Unit	Charge Lbs Note #1
619FNX0240W0	538BNX018000	5.5
619FNX0360W0	538BNX024000	5.9
	538BNX030000	5.9
619FNX0480W0	538BNX036000	5.9
	538BPX036000	8.0
	538BEX036000	8.0

Heat Pump Console

Indoor Unit	Outdoor Unit	System Charge Lbs
40CS-018---301RM	38CS-018---301	5.2
40CS-024---301RM	38CS-024---301	4.7
40CS-030---301RM	38CS-030---301	6.2

Heat Pump Console Multi Zone

Indoor Unit	Outdoor Unit	System Charge Lbs
40CS-030---301RM	38SB-030-3	12.4

Heat Cool Under Ceiling

COOLING WITH ELECTRIC HEAT

Indoor Unit	Outdoor Unit	Charge Lbs Note #1
619CNX0240W0AC	538ANX018000	3.6
	538ANX024000	6.2 **
	538JNX018000	4.3
	538JNX024000	4.9
619CNX0360W0AC	538ANX030000	5.6
	538ANX036000	5.6
	538APX036000	5.6
	538AEX036000	5.6
	538JNX030000	5.2
	538JNX036000	5
619CNX0480W0AC	538ANX048000	7.4
	538APX048000	7.4
	538AEX048000	7.4
	538JNX048000	7.1
619CNX0600W0AC	538ANX060000	13.6
	538APX060000	13.6
	538AEX060000	13.6
	538JNX060000	8.7

Heat Cool Cassette

COOLING WITH ELECTRIC HEAT

Indoor Unit	Outdoor Unit	Charge Lbs Note #1
619FNX0240W0	538ANX018000	5.8 **
	538JNX018000	3.9
619FNX0360W0	538ANX024000	4.8
	538JNX024000	4.6
	538ANX030000	5.2
	538JNX030000	5.6
619FNX0480W0	538ANX036000	5.8
	538APX036000	5.8
	538AEX036000	5.8
	538JNX036000	6

Duct Free Systems
High Wall Features and Accessories

Feature	Outdoor Section/Indoor Section					
	CAX/EAX All	DAX/EAX 009	DNX/ENX 012	DNX/ENX 018/024	ANX/ENX All	SNX/EAX/ENX All
Accumulator	Standard	Standard	Standard	Standard	Standard	Standard
Acoustically Lined Compressor Compartment	Standard	Standard	Standard	Standard	Standard	Standard
Auto Change over Cooling to Heating	N/A	Standard	Standard	Standard	N/A	N/A
Auto Restart Function	Standard	Standard	Standard	Standard	Standard	Standard
Automatic Air Swing (Horizontal Louvers)	Standard	Standard	Standard	Standard	Standard	Standard
Automatic Indoor Fan Sped Control	Standard	Standard	Standard	Standard	Standard	Standard
Automatic Start/Stop Timer 24 Hour	Standard	Standard	Standard	Standard	Standard	Standard
Charcoal Filter Kit	Accessory	Accessory	Accessory	Accessory	Accessory	Accessory
Cleanable Filters	Standard	Standard	Standard	Standard	Standard	Standard
Compressor Start Assistance (Recip Compressors	N/A	Standard	Standard	Standard	Standard	N/A
Compressor Time Guard Cycle Protector	N/A	N/A	N/A	Accessory	Accessory	N/A
Compressor Warranty (5 Year)	Standard	Standard	Standard	Standard	Standard	Standard
Condensate Pump	Accessory	Accessory	Accessory	Accessory	Accessory	Accessory
Condenser Wall Mounting Kit	N/A	N/A	N/A	Accessory	Accessory	Accessory
Control Power Cable, 35 ft, 24 volt	N/A	N/A	N/A	Standard	Standard	Standard
Control Power Cable, 35 ft, Line Voltage	Standard	Standard	Standard	N/A	N/A	N/A
Crankcase Heater (Recip/Rotary Compressors)	Accessory	N/A	N/A	Standard	Standard	N/A
Crankcase Heater (Scroll Compressors)	N/A	N/A	N/A	Accessory	Accessory	Accessory
Cycle-LOC Device	Standard	Standard	Standard	Standard	Standard	Standard
Demand Defrost	N/A	Standard	Standard	Standard	N/A	N/A
Diagnostics	Standard	Standard	Standard	Standard	Standard	Standard
Electric Heat	N/A	N/A	Standard	Standard	N/A	N/A
Evaporator Coil Freeze Protection	Standard	Standard	Standard	Standard	Standard	Standard
Fully Insulated Indoor Unit Cabinet	Standard	Standard	Standard	Standard	Standard	Standard
Heating Operation to -20 F	N/A	Standard	Standard	Standard	N/A	N/A
High and Low Voltage Terminal Block (Indoor)	Standard	Standard	Standard	Standard	Standard	Standard
High and Low Voltage Terminal Block (outdoor)	N/A	Standard	Standard	Standard	N/A	N/A
High Pressure Switch	N/A	N/A	N/A	Standard	Standard	Standard
Ice Stand	N/A	N/A	N/A	Accessory	Accessory	Accessory
Indoor Fan Motor (3 Speed)	Standard	Standard	Standard	Standard	Standard	Standard
Liquid Solenoid Valve	N/A	N/A	N/A	Accessory	Accessory	Accessory
Loss of Charge Switch	N/A	N/A	N/A	Standard	N/A	N/A
Low Ambient Temperature Controls to -20F	Accessory	Accessory	Accessory	Accessory	Accessory	Standard
Low Pressure Switch	N/A	N/A	N/A	N/A	Standard	Standard
Manually Controlled Air Distribution (Vertical Louv	Standard	Standard	Standard	Standard	Standard	Standard
Metering Device, AccuRater	N/A	Standard	Standard	Standard	Standard	N/A
Metering Device, Capillary	Standard	N/A	N/A	N/A	N/A	N/A
Metering Device, TXV, (Note #2)	N/A	N/A	N/A	N/A	N/A	Standard
Microprocessor Control	Standard	Standard	Standard	Standard	Standard	Standard
Mounting Bracket	Standard	Standard	Standard	Standard	Standard	Standard
Outdoor Low Voltage Terminal Block	Standard	Standard	Standard	Standard	Standard	Standard
Snow Stand	Accessory	Accessory	Accessory	Accessory	Accessory	Accessory
Stacking Rails	N/A	N/A	N/A	Accessory	Accessory	Accessory
Suction and Discharge Service Taps (Note #1)	Standard	Standard	Standard	Standard	Standard	Standard
Thermistor Cable Assembly	Standard	Standard	Standard	Standard	N/A	N/A
Totally Enclosed Fan Motor	Standard	Standard	Standard	Standard	Standard	Standard
Wall Mount	Accessory	Accessory	Accessory	Accessory	Accessory	Accessory
Warm Start (Heating)	N/A	Standard	Standard	Standard	N/A	N/A
Wind Baffles	Accessory	Accessory	Accessory	Accessory	Accessory	Accessory
Winter Start Control (Note #2)	N/A	N/A	N/A	Accessory	Accessory	Accessory
Wireless Remote Control	Standard	Standard	Standard	Standard	Standard	Standard

Legend
N/A - Not Available on this Combination

Notes:
1) The ANX, APX, AEX, BNX, BPX, BEX are equipped with 4 taps; one for each service valve and one each on the compressor suction and discharge. The SNX is equipped with taps at each suction valve, and compressor suction and discharge lines. The CAX, CNX, DAX, & DNX012 have service taps at the suction service valve and on the liquid line inside the unit.
2) Located in the outdoor unit
3) ANX, APX, AEX, and SNX units may be matched with Heat Pump Fan Coils to make Electric Heat Systems

01/10/02

Duct Free Systems
Under Ceiling Features and Accessories

Feature	Outdoor Section/Indoor Section			
	538A/CNX***E	538J/CNX***E	SNX/CNX***E	538B/CNX***W
Accumulator	Standard	N/A	Standard	Standard
Acoustically Lined Compressor Compartment	Standard	Standard	Standard	Standard
Adjacent Room Cooling/Heating Capability	N/A	N/A	N/A	N/A
Auto Change over Cooling to Heating	N/A	N/A	N/A	Standard
Auto Restart Function	Standard	Standard	Standard	Standard
Automatic Air Swing (Horizontal Louvers)	Standard	Standard	Standard	Standard
Automatic Indoor Fan Sped Control (Note #1)	Standard	Standard	Standard	Standard
Automatic Start/Stop Timer 24 Hour (Note #1)	Standard	Standard	Standard	Standard
Charcoal Filter Kit	N/A	N/A	N/A	N/A
Cleanable Filters	Standard	Standard	Standard	Standard
Compressor Start Assistance (Recip Compressc	Standard	Standard	N/A	Standard
Compressor Time Guard Cycle Protector	Standard	Accessory	Accessory	Accessory
Compressor Warranty (5 Year)	Standard	Standard	Standard	Standard
Condensate Pump	Accessory	Accessory	Accessory	Accessory
Condenser Wall Mounting Kit	Accessory	Accessory	Accessory	Accessory
Control Power Cable, 50 ft, 24 volt	Standard	Standard	Standard	Standard
Crankcase Heater (Recip Compressors)	Standard	Standard	N/A	Standard
Crankcase Heater (Scroll Compressors)	Accessory	Accessory	Accessory	Accessory
Cycle-LOC Device	Standard	Accessory	Standard	Standard
Demand Defrost	N/A	N/A	N/A	N/A
Diagnostics (Note #1)	Standard	Standard	Standard	Standard
Electric Heat	N/A	N/A	N/A	Standard
Electro-mechanical Control (24 Volt)	Standard	Standard	Standard	Standard
Evaporator Coil Freeze Protection	Standard	Standard	Standard	N/A
Fresh Air Intake Kit (Under Ceiling & Console)	Accessory	Accessory	Accessory	Accessory
Fully Insulated Indoor Unit Cabinet	Standard	Standard	Standard	Standard
Heating Operation to -20 F	N/A	N/A	N/A	Standard
High and Low Voltage Terminal Block (Indoor)	Standard	Standard	Standard	Standard
High and Low Voltage Terminal Block (oudoor)	Standard	Standard	Standard	Standard
High Pressure Switch	Standard	Accessory	Standard	Standard
Ice Stand	Accessory	Accessory	Accessory	Accessory
Indoor Fan Motor (3 Speed)	Standard	Standard	Standard	Standard
Indoor Guard (Discharge Grille)	Accessory	Accessory	Accessory	Accessory
Liquid Solenoid Valve	Accessory	Accessory	Standard	Accessory
Loss of Charge Switch	N/A	N/A	N/A	Standard
Low Ambient Temperature Controls to -20F	Accessory	Accessory	Standard	Accessory
Low Pressure Switch	Standard	Standard	Standard	Standard
Manually Controlled Air Distribution (Vertical Lou	Standard	Standard	Standard	Standard
Metering Device, AccuRater	Standard	Standard	N/A	Standard
Metering Device, Capillary	N/A	N/A	N/A	N/A
Metering Device, TXV (Note #3)	N/A	N/A	Standard	N/A
Microprocessor Control	N/A	N/A	N/A	N/A
Mounting Bracket	Standard	Standard	Standard	Standard
Outdoor Low Voltage Terminal Block	Standard	Standard	Standard	Standard
Power Ventilation Kit	Accessory	Accessory	Accessory	Accessory
Programmable Electronic Thermostat	Accessory	Accessory	Accessory	Accessory
Remote Control (Two Way Communicating)				
Refrigerant Line Turn Elbow	Standard	Standard	Standard	Standard
Snow Stand	Accessory	Accessory	Accessory	Accessory
Stacking Rails	Accessory	Accessory	Accessory	Accessory
Suction and Discharge Service Taps (Note #2)	Standard	Standard	Standard	Standard
Thermistor Cable Assembly	N/A	N/A	N/A	N/A
Time/Temperature Defrost	N/A	N/A	N/A	Standard
Totally Enclosed Fan Motor	Standard	Standard	Standard	Standard
Wall Mount	Accessory	Accessory	Accessory	Accessory
Warm Start (Heating)	N/A	N/A	N/A	N/A
Wind Baffles	Accessory	Accessory	Accessory	Accessory
Winter Start Control	Accessory	Accessory	Accessory	Accessory

Legend
N/A Not Available on This Combination

Note:
1) When installed with Carrier Specified Thermostate
2) The ANX, APX, AEX,BNX, BPX, & BEX are equipped with 4 taps; one for each service valve and one each on the compressor suction and discharge. The SNX is equipped with taps at each suction valve, and compressor suction and discharge lines.
3) Located in the outdoor unit
4) ANX, APX, AEX, & SNX units may be matched with Heat Pump Fan Coils to make Electric Heat Systems

Rev "A"
01/10/02

Duct Free Systems
Console Features and Accessories

Feature	Console Outdoor/Indoor			
	38CG/40CG	38CS/40CS	38SC/40CG	38SB/40CS
Accumulator	N/A	N/A	N/A	N/A
Acoustically Lined Compressor Compartment	Standard	Standard	Standard	Standard
Adjacent Room Cooling/Heating Capability	Field Install	Field Install	Field Install	Field Install
Auto Change over Cooling to Heating	Standard	Standard	Standard	Standard
Auto Restart Function	Standard	Standard	Standard	Standard
Automatic Air Swing (Horizontal Louvers)	Standard	Standard	Standard	Standard
Automatic Indoor Fan Sped Control (Note #1)	Standard	Standard	Standard	Standard
Automatic Start/Stop Timer 24 Hour (Note #1)	Standard	Standard	Standard	Standard
Charcoal Filter Kit	N/A	N/A	N/A	N/A
Cleanable Filters	Standard	Standard	Standard	Standard
Compressor Start Assistance (Recip Compressor	N/A	N/A	N/A	N/A
Compressor Time Guard Cycle Protector	Standard	Standard	Standard	Standard
Compressor Warranty (5 Year)	Standard	Standard	Standard	Standard
Condensate Pump	Field Install	Field Install	Field Install	Field Install
Condenser Wall Mounting Kit	N/A	N/A	N/A	N/A
Control Power Cable, 50 ft, 24 volt	N/A	N/A	N/A	N/A
Crankcase Heater (Recip Compressors)	N/A	Standard	N/A	Standard
Crankcase Heater (Scroll Compressors)	N/A	N/A	N/A	N/A
Cycle-LOC Device	N/A	N/A	N/A	N/A
Demand Defrost	Standard	Standard	Standard	Standard
Diagnostics (Note #1)	Standard	Standard	Standard	Standard
Electric Heat	N/A	Standard	N/A	Standard
Electro-mechanical Control (24 Volt)	N/A	N/A	N/A	N/A
Evaporator Coil Freeze Protection	Standard	Standard	Standard	Standard
Fresh Air Intake Kit (Under Ceiling & Console)	Field Install	Field Install	Field Install	Field Install
Fully Insulated Indoor Unit Cabinet	Standard	Standard	Standard	Standard
Heating Operation to -20 F	N/A	N/A	N/A	N/A
High and Low Voltage Terminal Block (Indoor)	N/A	N/A	N/A	N/A
High and Low Voltage Terminal Block (oudoor)	N/A	N/A	N/A	N/A
High Pressure Switch	N/A	N/A	N/A	N/A
Ice Stand	N/A	N/A	N/A	N/A
Indoor Fan Motor (3 Speed)	Standard	Standard	Standard	Standard
Indoor Guard (Discharge Grille)	N/A	N/A	N/A	N/A
Liquid Solenoid Valve	N/A	N/A	N/A	N/A
Loss of Charge Switch	N/A	N/A	N/A	N/A
Low Ambient Temperature Controls to -20F	N/A	N/A	N/A	N/A
Low Pressure Switch	N/A	N/A	N/A	N/A
Manually Controlled Air Distribution (Vertical Louv	Standard	Standard	Standard	Standard
Metering Device, AccuRater	N/A	N/A	N/A	N/A
Metering Device, Capillary	Standard	Standard	Standard	Standard
Metering Device, TXV (Note #3)	N/A	N/A	N/A	N/A
Microprocessor Control	Standard	Standard	Standard	Standard
Mounting Bracket	Standard	Standard	Standard	Standard
Outdoor Low Voltage Terminal Block	N/A	N/A	N/A	N/A
Power Ventilation Kit	N/A	N/A	N/A	N/A
Programmable Electronic Thermostat	N/A	N/A	N/A	N/A
Remote Control (Two Way Communicating)	Standard	Standard	Standard	Standard
Refrigerant Line Turn Elbow	N/A	N/A	N/A	N/A
Snow Stand	N/A	N/A	N/A	N/A
Stacking Rails	N/A	N/A	N/A	N/A
Suction and Discharge Service Taps (Note #2)	Standard	Standard	Standard	Standard
Thermistor Cable Assembly	Standard	Standard	Standard	Standard
Time/Temperature Defrost	Standard	Standard	Standard	Standard
Totally Enclosed Fan Motor	Standard	Standard	Standard	Standard
Wall Mount	N/A	N/A	N/A	N/A
Warm Start (Heating)	Standard	Standard	Standard	Standard
Wind Baffles	N/A	N/A	N/A	N/A
Winter Start Control	N/A	N/A	N/A	N/A

Legend
N/A Not Available on This Combination

Note:
1) When installed with Carrier Specified Thermostate
2) The ANX, APX, AEX,BNX, BPX, & BEX are equipped with 4 taps; one for each service valve and one each on the compressor suction and discharge. The SNX is equipped with taps at each suction valve, and compressor suction and discharge lines.
3) Located in the outdoor unit
4) ANX, APX, AEX, & SNX units may be matched with Heat Pump Fan Coils to make Electric Heat Systems

Rev /
01/10/02

Duct Free Systems
Cassette Features and Accessories

Feature	Outdoor Section/Indoor Section		
	538A/FNX***E	SNX/FNX***E	538B/FNX***W
Accumulator	Standard	Standard	Standard
Acoustically Lined Compressor Compartment	Standard	Standard	Standard
Auto Change over Cooling to Heating	N/A	N/A	Standard
Auto Restart Function	Standard	Standard	Standard
Automatic Indoor Fan Sped Control (Note #1)	Standard	Standard	Standard
Automatic Start/Stop Timer 24 Hour (Note #1)	Standard	Standard	Standard
Charcoal Filter Kit	N/A	N/A	N/A
Cleanable Filters	Standard	Standard	Standard
Compressor Start Assistance (Recip Compressors)	Standard	N/A	Standard
Compressor Time Guard Cycle Protector	Standard	Accessory	Accessory
Compressor Warranty (5 Year)	Standard	Standard	Standard
Condensate Pump	Standard	Standard	Standard
Condenser Wall Mounting Kit	Accessory	Accessory	Accessory
Control Power Cable, 35 ft, 24 volt	N/A	N/A	N/A
Control Power Cable, 35 ft, Line Voltage	N/A	N/A	N/A
Control Power Cable, 50 ft, 24 volt	N/A	N/A	N/A
Crankcase Heater (Recip Compressors)	Standard	N/A	Standard
Crankcase Heater (Scroll Compressors)	Accessory	Accessory	Accessory
Cycle-LOC Device	Standard	Standard	Standard
Demand Defrost	N/A	N/A	N/A
Diagnostics (Note #1)	Standard	Standard	Standard
Discharge Grille (Indoor)	Accessory	Accessory	Accessory
Electric Heat	N/A	N/A	Standard
Electro-mechanical Control (24 Volt)	Standard	Standard	Standard
Evaporator Coil Freeze Protection	Standard	Standard	N/A
Fresh Air Intake Kit	Accessory	Accessory	Accessory
Fully Insulated Indoor Unit Cabinet	Standard	Standard	Standard
Galvanized Steel Casing (Indoor Unit)	Standard	Standard	Standard
Heating Operation to -20 F	N/A	N/A	Standard
High and Low Voltage Terminal Block (Indoor)	Standard	Standard	Standard
High and Low Voltage Terminal Block (outdoor)	Standard	Standard	Standard
High Pressure Switch	Standard	Standard	Standard
Ice Stand	Accessory	Accessory	Accessory
Indoor Fan Motor (3 Speed)	Standard	Standard	Standard
Liquid Solenoid Valve	Accessory	Standard	Accessory
Loss of Charge Switch	N/A	N/A	Standard
Low Ambient Temperature Controls to -20F	Accessory	Accessory	Accessory
Low Pressure Switch	Standard	Standard	Standard
Manually Controlled Air Diffuser	Standard	Standard	Standard
Metering Device, AccuRater	Standard	N/A	Standard
Metering Device, Capillary	N/A	N/A	N/A
Metering Device, TXV	N/A	Standard	N/A
Mounting Bracket	Standard	Standard	Standard
Outdoor Low Voltage Terminal Block	Standard	Standard	Standard
Power Ventilation Kit	Accessory	Accessory	Accessory
Programmable Electronic Thermostat	Accessory	Accessory	Accessory
Snow Stand	Accessory	Accessory	Accessory
Stacking Rails	Accessory	Accessory	Accessory
Suction and Discharge Service Taps (Note #2)	Standard	Standard	Standard
Thermistor Cable Assembly	N/A	N/A	N/A
Time/Temperature Defrost	N/A	N/A	Standard
Totally Enclosed Fan Motor	Standard	Standard	Standard
Wall Mount	Accessory	Accessory	Accessory
Warm Start (Heating)	N/A	N/A	N/A
Wind Baffles	Accessory	Accessory	Accessory
Winter Start Control	Accessory	Accessory	Accessory

Legend
N/A Not Available on This Combination

Note:
1) When installed with Carrier Specified Thermostate
2) The ANX, APX, AEX,BNX, BPX, & BEX are equipped with 4 taps; one for each service valve and one each on the compressor suction and discharge. The SNX is equipped with taps at each suction valve, and compressor suction and discharge lines.
3) Located in the outdoor unit
4) ANX, APX, AEX, & SNX units may be matched with Heat Pump Fan Coils to make Electric Heat Systems

Accessories – Field Installed

Low Ambient Kit: The Low Ambient Kit is a solid state head pressure controller designed to control condenser fan cycling, and is activated by a pressure sensor. It is specifically designed to control fan motor cycles in response to saturated condensing pressure. This device maintains a constant saturated condensing temperature of 100 deg F +/- 10 deg F at outdoor air temperatures between 55 deg and –20 deg F and can be used on all condensing units without changing the fan motor. (Standard on 538S)

Winter Start Control: The Winter Start Control is a SPST delay relay. The control bypasses the low-pressure switch for approximately 3 minutes to permit start up for cooling operation under low load conditions at low ambient temperatures. This relay is recommended on all systems that have the accessory Low Ambient Kit. Winter Start Control can also be used to provide low ambient cooling at outdoor ambient temperatures between 55 deg and 40 deg F.

Liquid Line Solenoid Valve: The Liquid Line Solenoid Valve is an electrically operated shutoff valve that is installed at the outdoor unit to stop and start refrigerant flow in response to compressor operation. The valve maintains a column of refrigerant in the liquid line between compressor operating cycles and is required for certain long line applications and to improve system performance.

Crankcase Heater: The Crankcase Heater is available for units with scroll compressors and clamps onto the compressor oil sump. It is recommended for low ambient applications.

Field Fabricated Accessories: Field Fabricated Accessories including stacking kits, snow and ice stands, wind baffles, and wall mounting brackets should be constructed in the field using field supplied materials. For drawings contact your Carrier Representative.

Stacking Rails: Stacking Rails allow stacking of equally sized units or permit smaller units to be stacked on top of larger units. These field-fabricated rails can be used to stack all condensers except the 538C and Heat Pumps.

Snow or Ice Stands: Snow or Ice Stands raise the unit above snow and ice surfaces to permit normal air circulation, condensate drainage, and maintenance clearance in areas where prolonged subfreezing temperatures or heavy snowfalls are common. For drawings contact your Carrier Representative.

Wind Baffles: The wind baffle is a field fabricated sheet metal wrapper used to provide improved unit operation during high winds and is recommended whenever the low ambient accessory is used.

Wall Mount: Wall mount brackets are mounted on the outside of the structure to raise the unit from ground level, or to mount the unit on a wall adjacent to a sloping roof. Wall mounts are also useful in areas of heavy snowfall or where space is at a premium. For drawings contact your Carrier Representative.

Indoor Guard: The Indoor Guard is a decorative wire guard for the under ceiling fan coils. The guard mounts over the fan coil discharge to prevent objects from entering the unit and air swing.

Electronic Programmable Thermostats: Electronic Thermostats are available for cassettes and under ceiling fan coils. There are three thermostats available for the Duct Free Line. Flat Stat, Slim Line, and a 5-1-1 programmable. The integral subbase provides 3-speed fan switchover capability, auto-change over, and non-volatile memory. (no battery required)

MORE ON NEXT PAGE

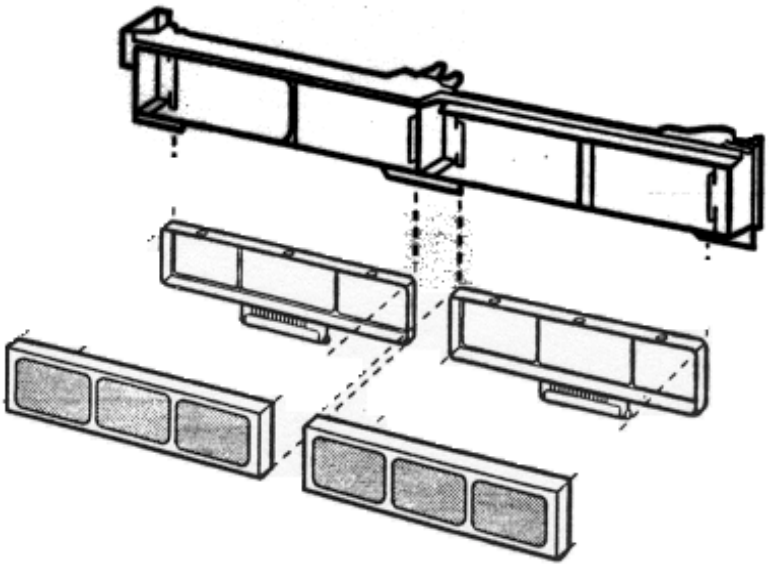

Charcoal Filter Kit: The charcoal (carbon) filter kit is available for High Wall fan coils. This accessory improves indoor air quality by removing volatile organic compounds (VOCs), orders, and micro-particles from the air. The filter kit can be installed before or after the unit has been mounted on the wall. Filters should be changed approximately every three months.

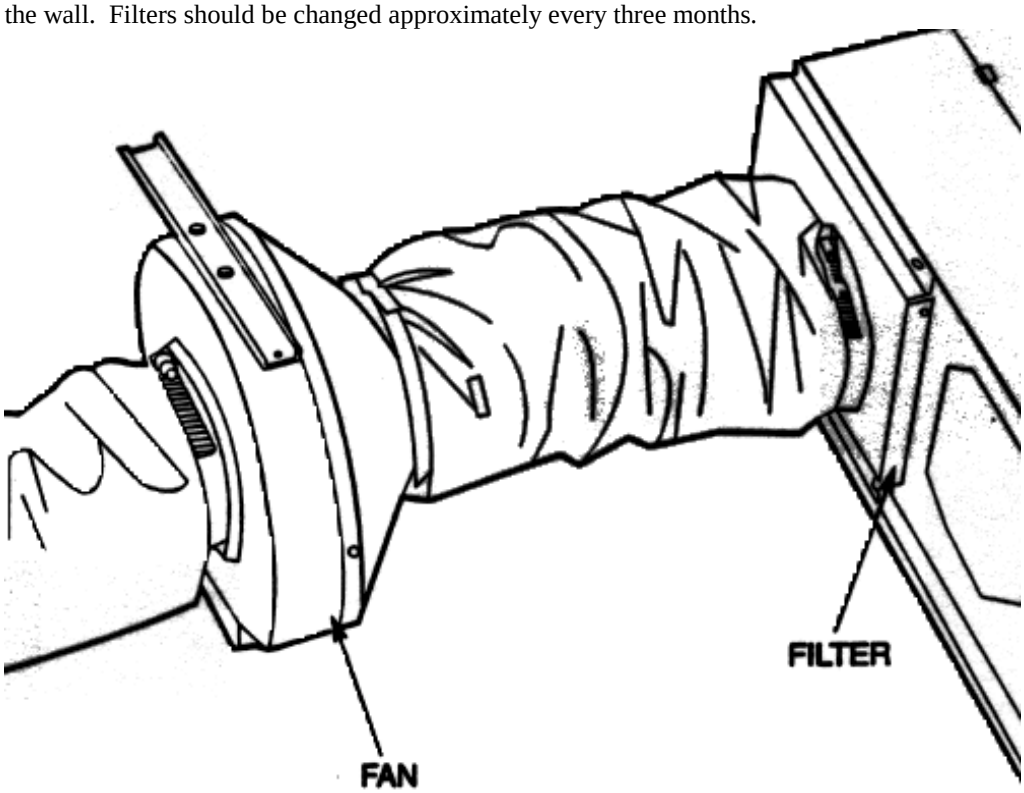

Fresh Air Intake & Filter Kit with Power Vent Fan Motor Kit: When used on Under Ceiling fan coils the Fresh Air Intake & Filter Kit provides up to 30% intake of outdoor air. By adding the Power Vent Fan Motor Kit to the Cassette fan coil, the two kits together combine, and provide 10% to 15% intake of outdoor air. The Fresh Air Intake &Filter Kit is mounted at the fan coil and filters the outside air. (Cassette arrangement shown.) See Section 2, Application Data, for Static Pressure & Design Considerations.

MORE ON NEXT PAGE

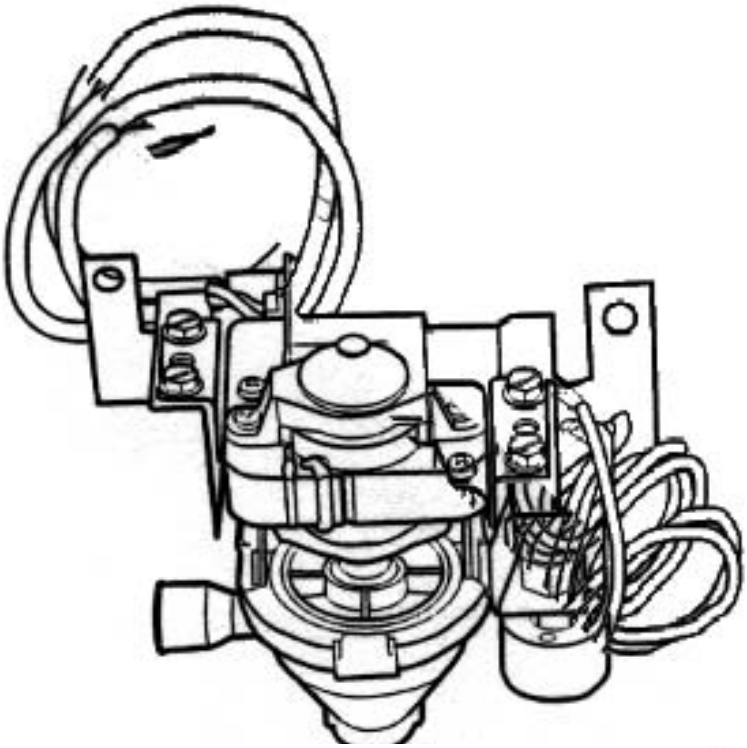

Condensate pumps provide lift capability per the table below:

High Wall 009	1ft to 10ft	Accessory
High Wall 012-024	3ft to 25 ft	Accessory
Under ceiling	20 inches	Accessory
Cassette	20 inches	Standard Factory Installed

The pumps mount inside the fan coil with quick plug in connections, and is recommended when adequate drain line pitch cannot be provided.

The same pump is used for both Under Ceiling and Cassette. The Cassette pump is factory installed.
Top of page: Under Ceiling & Cassette Condensate Pump.

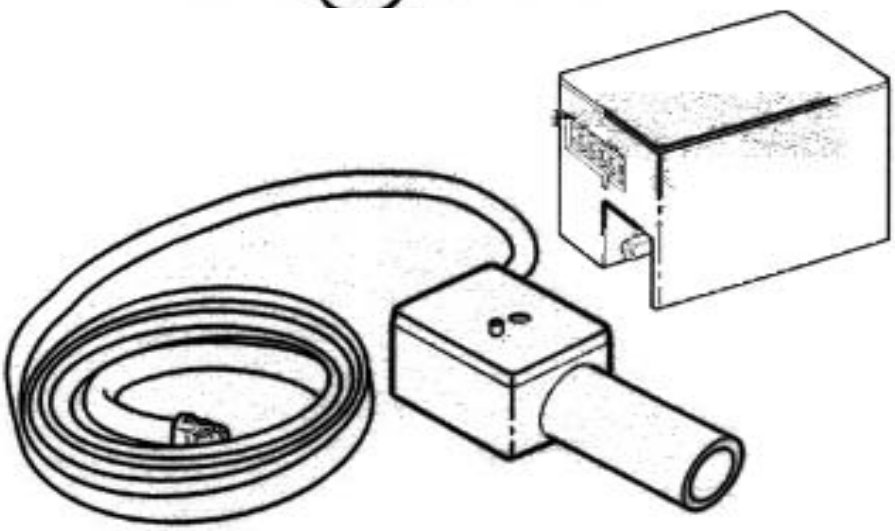

Flow Rate 1.3 Pints per Minute@220v.
Max Head 20”@220v.

Two piece pumps are for High Wall applications.

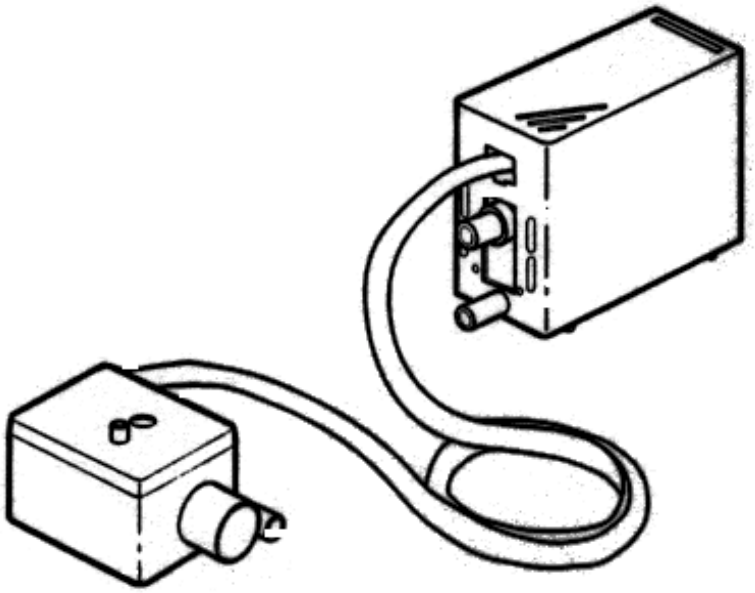

Suction Head (ft)	Vertical Discharge Height (ft)	Horizontal Discharge Length (ft)	Flow (GPH)
	3.28	16.4	1.98
0	19.60	16.4	0.66
	3.28	32.8	1.85
	19.60	32.8	0.53
	3.28	16.4	1.72
3.28	19.60	16.4	0.40
	3.28	32.8	1.59
	19.60	32.8	0.26

For Other combinations contact your Bryant Representative **(MORE)**

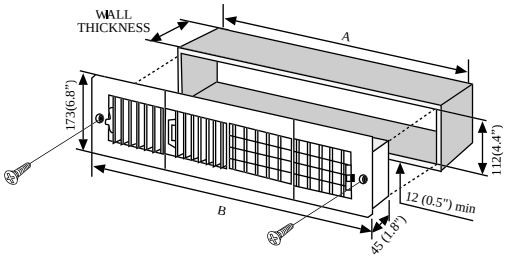

A01101

OPEN SIZE		BACK OPENINGS					
		2	3	4	5	6	7
A	(in.)	9.1	13.4	17.7	22.1	26.4	30.7
	(mm)	230	340	450	560	670	780
B	(in.)	11.2	15.5	19.85	24.2	28.5	32.8
	(mm)	284	394	504	514	724	834

Dimensional Drawing

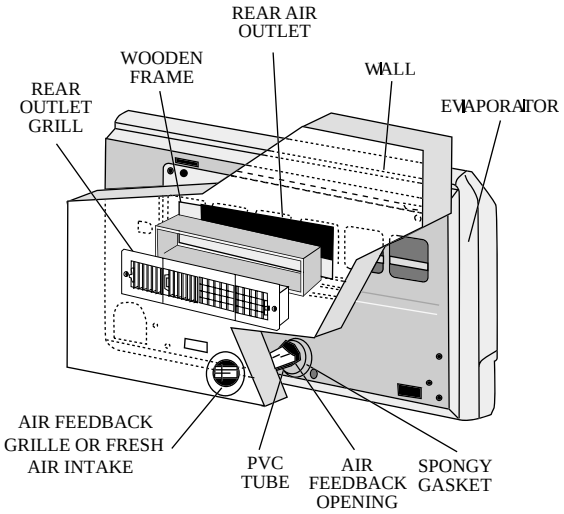

A01102

Two Way Air Conditioner

Product

Guide Specifications – Section 6

- High-Wall Cooling Only Units
- High-Wall Heat Pump Units
- Ceiling-Suspended Cooling Only Units
- Ceiling Suspended Heat Pump Units
- In-Ceiling Cassette Cooling Only Units
- In-Ceiling Cassette Heat Pump Units
- Outdoor Cooling Only Units
- Outdoor Heat Pump Only Units
- Console

Guide Specifications
High-Wall Cooling Only Units

HVAC Guide Specifications
Size range: ¾ to 2 Tons Cooling Capacity
Bryant Model Number: 619E and 538C, 538A

Part 1 – General

1.01 SYSTEM DESCRIPTION
Indoor, wall-mounted, direct-expansion fan coil to be matched with the commercial or light commercial condensing unit.

1.02 QUALITY ASSURANCE
Unit shall be rated per ARI Standards 210/240 and listed in the ARI directory as a matched system.

1.03 DELIVERY, STORAGE, AND HANDLING
Units shall be stored and handled per unit manufacturer's recommendations.

1.04 WARRANTY
One-year parts, 5-year compressor limited warranty

Part 2 – Products

2.01 EQUIPMENT

A. General:
Indoor, direct-expansion, wall-mounted fan coil. Unit shall be complete with cooling/heating (heat pump systems only) coil, fan, fan motor, piping connectors, electrical controls, microprocessor control system, and integral temperature sensing. Unit shall be furnished with integral wall-mounting bracket and mounting hardware.

B. Unit Cabinet:
Cabinet discharge and inlet grilles shall be attractively styled, high-impact polystyrene. Cabinet shall be fully insulated for improved thermal and acoustic performance.

C. Fans:
Fan shall be tangential direct-drive blower type with air intake at the upper front face of the unit and discharge at the bottom front. Automatic, motor-driven vertical air sweep shall be provided standard

Air sweep operation shall be user selectable. Horizontal direction may be manually adjusted (using remote controller) and vertical air sweep may be manually set. **(MORE)**

D. Coil:
Coil shall be copper tube with aluminum fins and galvanized steel tube sheets. Fins shall be bonded to the tubes by mechanical expansion. A drip pan under the coil shall have a drain connection for hose attachment to remove condensate. Condensate pan shall have internal trap and auxiliary drip pan under coil header.

Note: The 619E009, 012 units use capillary tubes in the outdoor unit for refrigerant control, and the 619E018, 024 units use the AccuRater® piston refrigerant metering device in the indoor unit.

E. Motors:
Motors shall be open drip-proof, permanently lubricated ball bearing with inherent overload protection. Fan motors shall be 3-speed.

F. Controls:
Controls shall consist of a microprocessor-based control system, which shall control space temperature, determine optimum fan speed, and run self-diagnostics. The temperature control range shall be from 64 F to 84 F. The unit shall have the following functions as a minimum.

1. An automatic restart after power failure at the same operating conditions as at failure.
2. A timer function to provide a minimum 24-hour timer cycle for system Auto. Start/Stop.
3. Temperature-sensing controls shall sense return-air temperature. Indoor-air high discharge temperature shutdown shall be provided.
4. Indoor coil freeze protection.
5. Wireless infrared remote control to enter set points and operating conditions.
6. Auto Stop features shall have integral setback control.
7. Automatic airsweep control to provide on or off activation of airsweep louvers.
8. Dehumidification mode shall provide room air circulation when no cooling is required.
9. Fan only operation shall provide room air circulation when no cooling is required.
10. Diagnostics shall provide continuous checks of unit operation and warn of possible malfunctions. Error messages shall be displayed at the unit and at the remote controller.
11. Fan speed control shall be user-selectable: high, medium, low, or microprocessor automatic operation during all operating modes.
12. A time delay shall prevent compressor restart in less than 3 minutes.

G. Filters:
Unit shall have filter track with factory-supplied cleanable filters.

(MORE)

H. Electrical Requirements:
Unit shall operate on 115-v (009,012), 208 v (012-024), or 230 v (012-024), 60 Hz power supply as specified on the equipment schedule. Power and control connections shall have terminal block connections.

I. Operating Characteristics:

Nominal Capacity Tons	Indoor Unit	Outdoor Unit	ARI Capacity Btuh	ARI CFM	SEER	EER	Sound Rating (dBa)			
							Indoor Power	Indoor Pressure	Outdoor Power	Outdoor Pressure
0.75	619EAX0090E0	538CAX009000	8,500	215	10.5	9.7	50.4	42.1	62.3	54
1	619EAX0120E0	538CAX012000	11,000	300	10.5	9.3	54	45.7	63.1	54.8
	619ENX0120E0	538CNX012000	11,600	302	11.0	10.1	54	45.7	63.1	54.8
1.5	619ENX0180E0	538ANX018000	17,300	480	11.3	10.4	57.6	49.3	66.1	57.8
		538JNX018000	16,200	480	11.0	9.7	57.6	49.3	59.5	51.2
2	619ENX0240E0	538JNX018000	17,600	550	11.7	10.4	62.5	54.2	59.2	51.2
		538ANX024000	22,600	550	12.0	10.8			65.5	57.2
		538JNX024000	22,600	550	11.3	11.3			63.2	54.9

Note:
Air Entering Condenser 95 deg F (Dry Bulb)
Air Entering Evaporator 80 deg F (Dry Bulb)
Air Entering Evaporator 67 deg F (Wet Bulb)

J. Refrigerant Lines:
The 009 and 012 units shall have rotatable refrigerant lines for penetration through the wall using flare connections. All units shall have flare connections and a 90-degree suction elbow shall be provided for rear connection.

K. Special Features (Field Installed):
1. Condensate Pump:
The condensate pump shall remove condensate from the drain pan when gravity drainage cannot be used. Pump shall be designed for quiet operation. Pump shall consist of two parts: an internal reservoir/sensor assembly, and a remote sound-shielded pump assemble. The lift capability of the condensate pump shall be 1 to 10 ft (009-size unit) or 3 to 25 ft (0012-024 size units). A level sensor on the condensate pan shall stop cooling operation if the level in the condensate pan is unacceptable.

2. Charcoal Filter Kit:
Kit shall include active charcoal filter(s) and required collectors and/or frames. Filters shall aid in removing volatile organic compounds and micro-particles from the air in the conditioned space.

Guide Specifications
High-Wall Heat Pump Units

HVAC Guide Specifications
Size range: ¾ to 2 Tons Cooling Capacity
Bryant Model Number: 619E and 538D

Part 1 – General

1.01 SYSTEM DESCRIPTION
Indoor, wall-mounted, direct-expansion fan coil to be matched with the commercial condensing or heat pump units.

1.02 QUALITY ASSURANCE
Unit shall be rated per ARI Standards 210/240 and listed in the ARI directory as a matched system.

1.03 DELIVERY, STORAGE, AND HANDLING
Units shall be stored and handled per unit manufacturer's recommendations.

1.04 WARRANTY
One-year parts, 5-year compressor limited warranty

Part 2 – Products

2.01 EQUIPMENT

A. General:
Indoor, direct-expansion, wall-mounted fan coil. Unit shall be complete with cooling/heating (heat pump systems only) coil, fan, fan motor, piping connectors, electrical controls, microprocessor control system, and integral temperature sensing. Unit shall be furnished with integral wall-mounting bracket and mounting hardware, and thermistor interconnection cable.

B. Unit Cabinet:
Cabinet discharge and inlet grilles shall be attractively styled, high-impact polystyrene. Cabinet shall be fully insulated for improved thermal and acoustic performance.

C. Fans:
Fan shall be tangential direct-drive blower type with air intake at the upper front face of the unit and discharge at the bottom front. Automatic, motor-driven vertical air sweep shall be provided standard

Air sweep operation shall be user selectable. Horizontal direction may be manually adjusted (using remote controller) and vertical air sweep may be manually set. **(MORE)**

D. Coil:
Coil shall be copper tube with aluminum fins and galvanized steel tube sheets. Fins shall be bonded to the tubes by mechanical expansion. A drip pan under the coil shall have a drain connection for hose attachment to remove condensate. Condensate pan shall have internal trap and auxiliary drip pan under coil header.

Note: The units use the AccuRater® piston refrigerant metering device in the indoor unit (for cooling) and at the outdoor unit liquid line service valve for heating.

E. Motors:
Motors shall be open drip-proof, permanently lubricated ball bearing with inherent overload protection. Fan motors shall be 3-speed.

F. Controls:
Controls shall consist of a microprocessor-based control system which shall control space temperature, determine optimum fan speed, and run self diagnostics. The temperature control range shall be from 64 F to 84 F. The unit shall have the following functions as a minimum.

1. An automatic restart after power failure at the same operating conditions as at failure.
2. A timer function to provide a minimum 24-hour timer cycle for system Auto. Start/Stop.
3. Temperature-sensing controls shall sense return-air temperature. Indoor-air high discharge temperature shutdown shall be provided.
4. Indoor coil freeze protection.
5. Wireless infrared remote control to enter set points and operating conditions.
6. Auto Stop features shall have integral setback control.
7. Automatic airsweep control to provide on or off activation of airsweep louvers.
8. Dehumidification mode shall provide increased latent removal capability by modulating system operation and set point temperature.
9. Fan only operation shall provide room air circulation when no cooling is required.
10. Diagnostics shall provide continuous checks of unit operation and warn of possible malfunctions. Error messages shall be displayed at the unit and at the remote controller.
11. An indoor to outdoor thermistor connection cable shall be provided with the fan coil unit.
12. Fan speed control shall be user-selectable: high, medium, low, or microprocessor automatic operation during all operating modes.
13. A time delay shall prevent compressor restart in less than 3 minutes.
14. Automatic heating-to cooling changeover to provide automatic heating and cooling operation. Control shall include deadband to prevent rapid mode cycling.
15. Demand defrost shall be provided and shall minimize defrost cycles by internally adjusting defrost timing based on frost accumulation.
16. Indoor coil high temperature protection shall be provided to detect excessive indoor discharge temperature when unit is in heat pump mode.

(MORE)

G. Filters:
Unit shall have filter track with factory-supplied cleanable filters.

H. Electrical Requirements:
Unit shall operate on 115 v (009), 208 v (012-024), or 230 v (012-024), 60 Hz power supply as specified on the equipment schedule. Power and control connections shall have terminal block connections.

I. Operating Characteristics:

Indoor Unit	Outdoor Unit	ARI Capacities		ARI CFM	Air* Entering Condenser	Air* Entering Evaporator	Air** Entering Evaporator	SEER	HSPF	Sound Rating (dBa)			
		C/O Btuh	H/P Btuh							Indoor Power	Indoor Pressure	Outdoor Power	Outdoor Pressure
619EAX0090W0	538DAX009000	8,700	9,000	252	95 Deg. F	80 Deg. F	67 Deg. F	10.0	6.8	50.6	42.3	63.4	55.1
619ENX0120HD	538DNX012000	11,100	11,700	300	95 Deg. F	80 Deg. F	67 Deg. F	10.0	6.8	54.0	45.7	62.8	54.5
619ENX0180H0	538DNX018000	17,300	16,400	485	95 Deg. F	80 Deg. F	67 Deg. F	11.0	6.8	58.6	50.3	67.2	58.9
619ENX0240H0	538DNX024000	23,200	21,000	520	95 Deg. F	80 Deg. F	67 Deg. F	11.0	6.8	61.7	53.4	63.3	55.0

* Dry Bulb
** Wet Bulb

Note: For alternate air entering conditions see the Carrier Product Selector

J. Refrigerant Lines:
The 009 and 012 units shall have rotatable refrigerant lines for penetration through the wall using flare connections. All units shall have flare connections and a 90-degree suction elbow shall be provided for rear connection.

K. Special Features (Field Installed):
1. Condensate Pump:
The condensate pump shall remove condensate from the drain pan when gravity drainage cannot be used. Pump shall be designed for quiet operation. Pump shall consist of two parts: an internal reservoir/sensor assembly, and a remote sound-shielded pump assemble. The lift capability of the condensate pump shall be 1 to 10 ft (009 size unit) or 3 to 25 ft (0012-024 size units). A level sensor on the condensate pan shall stop cooling operation if the level in the condensate pan is unacceptable.

2. Charcoal Filter Kit:
Kit shall include active charcoal filter(s) and required collectors and/or frames. Filters shall aid in removing volatile organic compounds and micro-particles from the air in the conditioned space.

Guide Specifications
Ceiling Suspended Cooling Only Units

HVAC Guide Specifications
Size range: 1 ½ to 5 Tons Cooling Capacity
Bryant Model Number: 619C and 538A

Part 1 – General

1.01 SYSTEM DESCRIPTION
Indoor, under-ceiling mounted, direct-expansion fan coil to be matched with the 38 HDC/HDL condensing units.

1.02 QUALITY ASSURANCE
Unit shall be rated (when matched with appropriate outdoor unit) per ARI Standards 210/240. Units shall be certified by UL and CSA.

1.03 DELIVERY, STORAGE, AND HANDLING
Units shall be stored and handled per unit manufacturer's recommendations.

1.04 WARRANTY
One year parts, 5-year compressor limited warranty

Part 2 – Products

2.01 EQUIPMENT

A. General:
Indoor, direct-expansion, ceiling-suspended fan coil. Fan coil shall be shipped complete with cooling coil, fan, fan motor, piping connectors, electrical controls, solid-state electromechanical control system, and ceiling mounting brackets.

B. Unit Cabinet:
Cabinet shall be zinc-coated bonderized steel finished with a baked enamel paint. Inlet grilles shall be attractively styled, high-impact polystyrene. Matching mounting brackets shall be provided.

C. Fans:
Fan shall be centrifugal blower type with air intake in the bottom rear of the unit and discharge in the front. Automatic, motor-driven vertical air sweep shall be provided standard.

D. Coils:
Coils shall be copper tube with aluminum fins and galvanized steel tube sheets. Fins shall be bonded to the tubes by mechanical expansion. A drip pan under the coil shall have a drain connection for hose attachment to remove condensate.

(MORE)

E. Motors:
Motors shall be permanently lubricated ball bearing with inherent overload protection. Fan motors shall be 3-speed.

F. Controls:
Controls shall consist of a solid-state electromechanical control system which shall control space temperature, determine optimum fan speed. The temperature control range shall be from 64 F to 84 F. The unit shall have the following functions as a minimum.

1. An automatic restart after power failure at the same operating conditions as at failure.
2. Non-programmable thermostat to provide cooling and heating set points and day/nigh setback modes.
3. Wired control to enter set points and operating conditions.
4. Filter status indication after 250 hours of indoor fan operation.
5. Automatic airsweep control to provide on or off activation of airsweep louvers.
6. Cooling mode to provide modulating fan speed based on difference between temperature setpoint and space temperature.
7. Fan only operation to provide room air circulation when no cooling is required.
8. A 50-ft indoor to outdoor control connection cable shall be provided with the fan coil unit.
9. Fan speed control shall be user-selectable: high, medium, low, or automatic operation during all operating modes.
10. A time delay shall prevent compressor restart in less than 2 or 4 minutes (adjustable)

G. Filters:
Unit shall have filter track with factory-supplied cleanable filters.

H. Electrical Requirements:
Unit shall operate on 208 v or 230 v 60 Hz power supply as specified on the equipment schedule. Power and control connections shall have terminal block connections

I. Operating Characteristics:

Nominal Capacity Tons	Indoor Unit	Outdoor Unit	ARI Capacity Btuh	ARI CFM	SEER	EER	Sound Rating (dBa)			
							Indoor Power	Indoor Pressure	Outdoor Power	Outdoor Pressure
1.5	619CNX0240E0AC	538ANX018000	18,000	500	12.0	11.0	57.2	48.9	66.1	57.8
		538JNX018000	18,000	500	11.6	10.5			59.5	51.2
2	619CNX0240E0AC	538ANX024000	22,800	600	12.0	11.0	58.4	50.1	65.5	57.2
		538JNX024000	23,000	600	11.0	11.2			63.2	54.9
2.5	619CNX0360E0AC	538ANX030000	30,000	840	12.0	11.0	68.4	60.1	63.0	54.7
		538JNX030000	29,000	840	10.3	9.7			59.5	51.2
3	619CNX0360E0AC	538ANX,APX,AEX,036000	34,000	840	12.0	10.5	68.4	60.1	64.5	56.2
		538JNX036000	34,000	840	10.1	9.6			64.7	56.4
4	619CNX0480E0AC	538ANX,APX,AEX,048000	47,000	1,200	12.0	10.8	67.3	59	70.1	61.8
		538JNX048000	45,500	1,200	10.8	9.9			65.4	57.1
5	619CNX0600E0AC	538ANX,APX,AEX,060000	58,000	1,600	12.0	11.2	70.1	61.8	69.4	61.1
		538JNX060000	58,500	1,600	10.8	9.5			65.8	57.5

Note:
Air Entering Condenser 95 deg F (Dry Bulb)
Air Entering Evaporator 80 deg F (Dry Bulb)
Air Entering Evaporator 67 deg F (Wet Bulb)

(MORE)

J. Special Features (Field Installed):
Certain features are not applicable when the features designated by * are specified. For assistance in amending the specifications, contact your local Carrier Sales Office.

1. * Internal Condensate Pump:
   The condensate pump shall remove condensate from the drain pan when gravity drainage cannot be used. The lift capability of the condensate pump shall be 20 inches. Float control shall be in the condensate sump to shut unit down in case of pump malfunction.

2. Fresh Air Intake Kit:
   Kit shall include filter and duct connections to provide for outdoor ventilation air.

3. Indoor Guard Kit:
   Kit shall include a guard for the discharge grille to prevent objects from entering the air sweep mechanism.

4. Electronic Programmable Thermostat:
   Thermostat shall be commercial grade and shall provide 7-day, 4-event scheduling. Integral sub-base shall be included. Thermostat shall also provide 3-speed fan switchover capability, air sweep auto changeover, and shall not require a battery to retain memory.

5. Power Ventilation Kit:
   Kit shall be used with the accessory fresh air kit when fresh air must be ducted in. The kit will overcome duct static to provide a constant supply of ventilation air. Kit consists of booster fan and adjustable speed control to properly balance fan to achieve required airflow rate.

Guide Specifications
Ceiling Suspended Heat Pump Units

HVAC Guide Specifications
Size range: 1 ½ to 5 Tons Cooling Capacity
Bryant Model Number: 619C and 538B

Part 1 – General

1.01 SYSTEM DESCRIPTION
Indoor, under-ceiling mounted, direct-expansion fan coil to be matched with the 538B commercial heat pump condensing units.

1.02 QUALITY ASSURANCE
Unit shall be rated (when matched with appropriate outdoor unit) per ARI Standards 210/240. Units shall be certified by UL and CSA.

1.03 DELIVERY, STORAGE, AND HANDLING
Units shall be stored and handled per unit manufacturer's recommendations.

1.04 WARRANTY One-year parts, 5-year compressor limited warranty

Part 2 – Products

2.01 EQUIPMENT

A. General:
Indoor, direct-expansion, ceiling-suspended fan coil. Fan coil shall be shipped complete with cooling coil, fan, fan motor, piping connectors, electrical controls, solid-state electromechanical control system, and ceiling mounting brackets.

B. Unit Cabinet:
Cabinet shall be zinc-coated bonderized steel finished with a baked enamel paint. Inlet grilles shall be attractively styled, high-impact polystyrene. Matching mounting brackets shall be provided.

C. Fans:
Fan shall be centrifugal blower type with air intake in the bottom rear of the unit and discharge in the front. Automatic, motor-driven vertical air sweep shall be provided standard.

D. Coils:
Coils shall be copper tube with aluminum fins and galvanized steel tube sheets. Fins shall be bonded to the tubes by mechanical expansion. A drip pan under the coil shall have a drain connection for hose attachment to remove condensate.

(MORE)

Note: The units use the AccuRater® piston refrigerant metering device in the indoor unit (for cooling) and at the outdoor unit liquid line service valve for heating.

E. Motors:
Motors shall be permanently lubricated ball bearing with inherent overload protection. Fan motors shall be 3-speed.

F. Controls:
Controls shall consist of a solid-state electromechanical control system which shall control space temperature, determine optimum fan speed. The temperature control range shall be from 64 F to 84 F. The unit shall have the following functions as a minimum.

1. An automatic restart after power failure at the same operating conditions as at failure.
2. Non-programmable thermostat to provide cooling and heating set points and day/nigh setback modes.
3. Evaporator coil freeze protection.
4. Wired control to enter set points and operating conditions.
5. Filter status indication after 250 hours of indoor fan operation.
6. Automatic airsweep control to provide on or off activation of airsweep louvers.
7. Cooling mode to provide modulating fan speed based on difference between temperature setpoint and space temperature.
8. Fan only operation to provide room air circulation when no cooling is required.
9. A 50-ft indoor to outdoor control connection cable shall be provided with the fan coil unit.
10. Fan speed control shall be user-selectable: high, medium, low, or automatic operation during all operating modes.
11. A time delay shall prevent compressor restart in less than 2 or 4 minutes (adjustable).
12. Automatic heating-to-cooling changeover to provide automatic heating and cooling operation. Control shall include deadband to prevent rapid mode cycling.

G. Filters:
Unit shall have filter track with factory-supplied cleanable filters.

H. Electrical Requirements:
Unit shall operate on 208 v or 230 v 60 Hz power supply as specified on the equipment schedule. Power and control connections shall have terminal block connections.

(MORE)

I. Operating Characteristics:

Indoor Unit	Outdoor Unit	ARI Capacities		ARI CFM	Air* Entering Condenser	Air* Entering Evaporator	Air** Entering Evaporator	SEER	HSPF	Sound Rating (dBa)			
		C/O Btuh	H/P Btuh							Indoor Power	Indoor Pressure	Outdoor Power	Outdoor Pressure
619CNX0240W0AC	538BNX018000	19,000	17,000	500	95 Deg. F	80 Deg. F	67 Deg. F	11.0	7.2	57.2	48.9	67.2	58.9
	538BNX024000	24,000	22,600	525	95 Deg. F	80 Deg. F	67 Deg. F	11.0	7.3			66.3	58.0
619CNX0360W0AC	538BNX030000	30,000	28,000	870	95 Deg. F	80 Deg. F	67 Deg. F	11.0	7.4	68.4	60.1	65.9	57.6
	538BNX036000	34,600	33,000	870	95 Deg. F	80 Deg. F	67 Deg. F	11.5	7.2			66.2	57.9
	538APX,AEX036000	36,000	34,000	870	95 Deg. F	80 Deg. F	67 Deg. F	11.0	6.8			71.5	63.2
619CNX0480W0AC	538ANX,APX,AEX048000	48,000	45,500	1,100	95 Deg. F	80 Deg. F	67 Deg. F	10.2	7.3	67.3	59.0	73.0	64.7
619CNX0600W0AC	538ANX,APX,AEX060000	58,000	57,500	1,600	95 Deg. F	80 Deg. F	67 Deg. F	11.0	7.4	70.1	61.8	73.6	65.3

* Dry Bulb
** Wet Bulb

Note: For alternate air entering conditions see the Carrier Product Selector

J. Special Features (Field Installed):

1. Internal Condensate Pump:
   The condensate pump shall remove condensate from the drain pan when gravity drainage cannot be used. The lift capability of the condensate pump shall be 20 inches. Float control shall be in the condensate sump to shut unit down in case of pump malfunction.

2. Fresh Air Intake Kit:
   Kit shall include filter and duct connections to provide for outdoor ventilation air (must be used with Power Ventilation Kit).

3. Indoor Guard Kit:
   Kit shall include a guard for the discharge grille to prevent objects from entering the air sweep mechanism.

4. Electronic Programmable Thermostat:
   Thermostat shall be commercial grade and shall provide 7-day, 4-event scheduling. Integral sub-base shall be included. Thermostat shall also provide 3-speed fan switchover capability, air sweep auto changeover, and shall not require a battery to retain memory.

5. Power Ventilation Kit:
   Kit must be used with the accessory fresh air kit when fresh air must be ducted in. The kit will overcome duct static to provide a constant supply of ventilation air. Kit consists of booster fan and adjustable speed control to properly balance fan to achieve required airflow rate.

Guide Specifications
Console/Ceiling Suspended
Cooling Only System
Heat Pump System
(With Supplemental Electric Heat)
Multi-Zone System
(Cooling Only & Heat Pump)

HVAC Guide Specifications:
Cooling Only System - 1 ½, 2, and 2 ½ Tons Capacity
Heat Pump System - 1 ½, 2, and 2 ½ Tons Capacity
Cooling Only Two-Zone System - 2 ½ Tons Capacity
Heat Pump Two-Zone System - 2 ½ Tons Capacity

Part 1 – General

1.01 SYSTEM DESCRIPTION

A. Outdoor-mounted, air-cooled split system. Outdoor section suitable for on the ground, rooftop, balcony, or under-deck installation. Unit shall consist of a hermetic compressor, an air-cooled coil, propeller-type draw-through outdoor fan, full refrigerant charge, and control box. Unit shall discharge air horizontally. Units shall function as the outdoor component of an air-to-air cooling system.

B. Indoor direct expansion fan coil that can be, console or under-ceiling mounted. Fan coil shall be shipped complete with heat exchanger coil, fan, fan motor, piping connectors, electrical controls, infrared remote control system, wall and ceiling mounting brackets. Fan shall be centrifugal blower type with air intake in the bottom of the unit and discharge In the front. Automatic, motor-driven vertical air sweep shall be provided standard.

1.02 QUALITY ASSURANCE

A. Unit construction shall comply with ANSI/ASHRAE 15, latest revision, and with the NEC.
B. Unit shall be rated with the matching outdoor unit per ARI Standards 210/240.
C. Units shall be constructed in accordance with UL standards.
D. Units shall be listed in the CEC directory.
E. Unit cabinet shall be capable of withstanding 500-hour salt spray test.
F. Air-cooled condenser coils shall be leak tested at 350-psig.
G. Units will be certified for use in Canada

1.03 DELIVERY, STORAGE, AND HANDLING

Units shall be stored and handled per unit manufacturer's recommendations. **(MORE)**

1.04 WARRANTY

One-year parts, 5-year compressor limited warranty

Part 2 – Product

2.01 EQUIPMENT

A. Unit Cabinet:
Outdoor cabinet shall be zinc-coated steel finished with baked enamel paint. Inlet grilles shall be attractively styled. Indoor cabinet is made up of high impact plastic. Mounting brackets for either floor or ceiling installation shall be provided.

B. Coils:
Coils shall be copper tube with aluminum fins and galvanized steel tube sheets. Fins shall be bonded to the tubes by mechanical expansion. A drain pan under the coil will have a drain hose connection to remove condensate.

Note: The units use a capillary tube-metering device in the outdoor unit.

C. Motors/Fans:
1. Motors shall be permanently lubricated with inherent overload protection.
2. Indoor fan motors are 3-speed. Outdoor fans will be direct-drive propeller type, and will discharge air horizontally. Fans will draw air accross the outdoor coil.
3. Outdoor fan motors are totally enclosed; single-phase motors with class B insulation.
4. Motor shafts will have inherent corrosion resistance.
5. Fan blades are corrosion resistant and are statically and dynamically balanced.

D. Compressor:
1. Compressor shall be fully hermetic reciprocation type.
2. Compressor shall be equipped with oil system, operating oil charge, and motor. Internal overloads shall protect the compressor from overtemperature and overcurrent.
3. Motor shall be NEMA rated class F, suitable for operation in a refrigerant atmosphere.
4. Reciprocating compressors on Heat Pump units shall be equipped with crankcase heaters to minimize liquid refrigerant accumulation in compressor during shutdown and to prevent refrigerant dilution of oil.
5. Compressor assembly shall be installed on rubber vibration isolators and shall have internal spring isolation.
6. Compressors shall be single-phase as specified on the contract drawings.

E. Controls:
Controls shall consist of a microprocessor based control system with a two way communicating infrared remote control. The temperature control range shall be from 54 F to 90 F. The unit shall have the following functions:

1. An automatic restart after power failure at the same operating conditions as at failure.
2. Day/night setback timer modes.
3. Evaporator coil freeze protection.
4. Clock

(MORE)

5. Filter needs cleaning status indication.
6. Automatic airsweep control to provide on or off activation of airsweep louvers.
7. Auto mode to provide modulating fan speed based on difference between temperature setpoint and space temperature.
8. Fan only operation to provide air circulation when no cooling or heating is required.
9. Fan speed control shall be user-selectable: high, medium, low, or automatic operation during all operating modes.
10. A time delay shall prevent compressor restart in less than 3 minutes.
11. Automatic heating-to-cooling changeover to provide automatic heating and cooling operation. Control shall include deadband to prevent rapid mode cycling. (Heat Pump Models)
12. Sleep set back.
13. Set temperature and room temperature displays.
14. Dehumidification mode
15. Fahrenheit or Celsius display

F. Filters:
Unit shall have filter track with factory-supplied cleanable filters.

G. Electrical Requirements:
Unit shall operate on 208v or 230v 60 Hz power supply. Power and control connections shall have terminal block connections.

H. Operating Characteristics:

Cooling Only Console

Nominal Capacity Tons	Indoor Unit	Outdoor Unit	ARI Capacities		ARI CFM	SEER	EER	Sound Rating (dBa)			
			C/O Btuh	H/P Btuh				Indoor Power	Indoor Pressure	Outdoor Power	Outdoor Pressure
1.5	40CG-018-3	38CG-018-3	18,000		650	10	-	55	38	79	49
2	40CG-024-3	38CG-024-3	23,400		800	10	-	56	40	74	49
2.5	40CG-030-3	38CG-030-3	30,000		800	10	-	55	40	78	49

Cooling Only Console Multi Split

Nominal Capacity Tons	Indoor Unit	Outdoor Unit	ARI Capacities		ARI CFM	SEER	EER	Sound Rating (dBa)			
			C/O Btuh	H/P Btuh				Indoor Power	Indoor Pressure	Outdoor Power	Outdoor Pressure
2.5	40CG-030-3	38SC-030-3	30,000		800	10	-	55	40	80	51

Heat Pump Console

Nominal Capacity Tons	Indoor Unit	Outdoor Unit	ARI Capacities		ARI CFM	SEER	EER	HSPF	Sound Rating (dBa)			
			C/O Btuh	H/P Btuh					Indoor Power	Indoor Pressure	Outdoor Power	Outdoor Pressure
1.5	40CS-018-3	38CS-018-3	18,000	18,000	650	10.0	-		55	38	79	49
2	40CS-024-3	38CS-024-3	23,400	24,000	800	10.0	-		56	40	74	49
2.5	40CS-030-3	38CS-030-3	30,000	31,000	800	10.0	-		55	40	78	49

Heat Pump Console Multi Split

Nominal Capacity Tons	Indoor Unit	Outdoor Unit	ARI Capacities		ARI CFM	SEER	EER	HSPF	Sound Rating (dBa)			
			C/O Btuh	H/P Btuh					Indoor Power	Indoor Pressure	Outdoor Power	Outdoor Pressure
2.5	40CS-030-3	38SB-030-3	30,000	31,000	800	10.0	-		55	40	80	49

(MORE)

I. Special Capabilities (Field Installed):

1. Fresh Air Intake:
   A field installed grille to provide for outdoor ventilation air when indoor unit is installed against an exterior wall.

2. Adjacent room cooling capability:
   A field installed adjustable register vent to allow conditioned air to pass into an adjacent room.

Guide Specifications
In-Ceiling Cassette Cooling Only Units

HVAC Guide Specifications
Size range: 1 ½ to 3 Tons Cooling Capacity
Bryant Model Number: 619F and 538A

Part 1 – General

1.01 SYSTEM DESCRIPTION
Indoor, in-the-ceiling-mounted, direct-expansion fan coil to be matched with the 538A commercial condensing units. Units shall fit standard 2 ft x 2 ft and 2ft x 4ft ceiling grid.

1.02 QUALITY ASSURANCE
Unit shall be rated (when matched with appropriate outdoor unit) per ARI Standards 210/240. Units shall be certified by UL and CSA.

1.03 DELIVERY, STORAGE, AND HANDLING
Units shall be stored and handled per unit manufacturer's recommendations.

1.04 WARRANTY
One-year parts, 5-year compressor limited warranty

Part 2 – Products

2.01 EQUIPMENT

A. General:
Indoor, direct-expansion, low-profile (113/4-in. high) in-ceiling fan coil. Fan coil shall be shipped complete with cooling coil, fan, fan motor, piping connectors, electrical controls, condensate pump, and hanging brackets.

B. Unit Cabinet:
Cabinet shall be constructed of zinc-coated steel. Fully insulated discharge and inlet grilles shall be attractively styled, high-impact polystyrene. Cabinet shall have filter tracks and cleanable filters which shall be accessible from below with a ¼-turn fastener. Adjacent room cooling to be provided by a simple knock-out in the cabinet side panel, and cabinet shall have provisions to accommodate a limited amount of duct-work, if desired.

C. Fans:
Fan shall be centrifugal, direct-drive blower type with air intake in center of the unit and discharge on the perimeter. Air louvers shall be adjustable for 2,3, or 4-way discharge.

(MORE)

D. Coil:
Coil shall be copper tube with aluminum fins and galvanized steel tube sheets. Fins shall be bonded to the tubes by mechanical expansion. A drip pan under the coil shall have a factory-installed condensate pump and drain connection for hose attachment to remove condensate.

E. Refrigerant Metering Device:
The unit shall have a refrigerant metering piston and body.

F. Motors:
Motors shall be totally enclosed and permanently lubricated ball bearing with inherent overload protection. Fan motor shall be 3-speed.

G. Controls:
Controls shall be 24 v, and shall be easily operated by the user from a wall-mounted control unit. Float control shall be in the condensate sump to shut unit down in case of pump malfunction. A wall-mounted electro-mechanical thermostat with 3 fan speed selections, and an auto./manual switch shall be supplied for field installation. The R-22 refrigerant is controlled with a piston-type refrigerant metering device, and evaporator coil freeze protection shall be provided.

H. Filters:
Unit shall have filter track with factory-supplied cleanable filters.

I. Electrical Requirements:
Unit shall operate on 208 v or 230 v 60 Hz power supply as specified on the equipment schedule. Power and control connections shall have terminal block connections.

J. Operating Characteristics:

Nominal Capacity Tons	Indoor Unit	Outdoor Unit	ARI Capacity Btuh	ARI CFM	SEER	EER	Sound Rating (dBa)			
							Indoor Power	Indoor Pressure	Outdoor Power	Outdoor Pressure
1.5	619FNX0240E0	538ANX018000	18,300	525	11.0	10.4	56.3	48.0	66.1	57.8
		538JNX018000	17,800	525	11.4	10.6			59.5	51.2
	619FNX0360E0	538ANX024000	24,000	915	11.0	10.9	54.8	46.5	65.5	57.2
2		538JNX024000	24,000	915	11.8	11.3			63.2	54.9
2.5		538ANX030000	30,000	915	10.8	9.6			63.0	54.7
3		538JNX030000	29,000	915	11.1	10.1			59.5	51.2
		538ANX,APX,AEX,036000	33,000	915	10.8	10.5			64.5	56.2
		538JNX036000	34,400	915	10.5	9.7			64.7	56.4

Note:
Air Entering Condenser 95 deg F (Dry Bulb)
Air Entering Evaporator 80 deg F (Dry Bulb)
Air Entering Evaporator 67 deg F (Wet Bulb)

(MORE)

K. Special Features (Field Installed):

1. Fresh Air Intake Kit:
   Kit shall include filter and duct connections to provide for outdoor ventilation air.

2. Electronic Programmable Thermostat:
   Thermostat shall be commercial grade and shall provide 7-day, 4-event scheduling. Integral sub-base shall be included. Thermostat shall also provide 3-speed fan switchover capability, air sweep auto changeover, and shall not require a battery to retain memory.

3. Power Ventilation Kit:
   Kit shall be used with the accessory fresh air kit when fresh air must be ducted in. The kit will overcome duct static to provide a constant supply of ventilation air. Kit consists of booster fan and adjustable speed control to properly balance fan to achieve required airflow rate.

Guide Specifications
In-Ceiling Cassette Heat Pump Units

HVAC Guide Specifications
Size range: 1 ½ to 3 Tons Cooling Capacity
Bryant Model Number: 619F and 538B

Part 1 – General

1.01 SYSTEM DESCRIPTION
Indoor, in-the-ceiling-mounted, direct-expansion fan coil to be matched with the 538B commercial heat pump condensing units. Units shall fit standard 2ft x 2ft and 2ft x 4ft ceiling grid.

1.02 QUALITY ASSURANCE
Unit shall be rated (when matched with appropriate outdoor unit) per ARI Standards 210/240. Units shall be certified by UL and CSA.

1.03 DELIVERY, STORAGE, AND HANDLING
Units shall be stored and handled per unit manufacturer's recommendations.

1.04 WARRANTY
One-year parts, 5-year compressor limited warranty

Part 2 – Products

2.01 EQUIPMENT

A. General:
Indoor, direct-expansion, low-profile (11 3/4-in. high) in-ceiling fan coil. Fan coil shall be shipped complete with cooling coil, fan, fan motor, piping connectors, electrical controls, condensate pump, and hanging brackets.

B. Unit Cabinet:
Cabinet shall be constructed of zinc-coated steel. Fully insulated discharge and inlet grilles shall be attractively styled, high-impact polystyrene. Cabinet shall have filter tracks and cleanable filters which shall be accessible from below with a ¼-turn fastener. Adjacent room cooling to be provided by a simple knock-out in the cabinet side panel, and cabinet shall have provisions to accommodate a limited amount of duct-work, if desired.

(MORE)

C. Fans:
Fan shall be centrifugal, direct-drive blower type with air intake in center of the unit and discharge on the perimeter. Air louvers shall be adjustable for 2,3, or 4-way discharge.

D. Coil:
Coil shall be copper tube with aluminum fins and galvanized steel tube sheets. Fins shall be bonded to the tubes by mechanical expansion. A drip pan under the coil shall have a factory-installed condensate pump and drain connection for hose attachment to remove condensate.

Note: The units use the AccuRater® piston refrigerant metering device in the indoor unit (for cooling) and at the outdoor unit liquid line service valve for heating.

E. Motors:
Motors shall be totally enclosed and permanently lubricated ball bearing with inherent overload protection. Fan motor shall be 3-speed.

F. Electric Heater:
Units shall be equipped with factory-mounted electric heaters. Minimum protections shall include overcurrent and high temperature protection.

G. Controls:
Controls shall be 24 v, and shall be easily operated by the user from a wall-mounted control unit. Float control shall be in the condensate sump to shut unit down in case of pump malfunction. A wall-mounted electro-mechanical thermostat with 3 fan speed selections, and an auto./manual switch shall be supplied for field installation. The R-22 refrigerant is controlled with a piston-type refrigerant metering device, and evaporator coil freeze protection shall be provided.

H. Filters:
Unit shall have filter track with factory-supplied cleanable filters.

I. Electrical Requirements:
Unit shall operate on 208 v or 230 v 60 Hz power supply as specified on the equipment schedule. Power and control connections shall have terminal block connections.

J. Operating Characteristics:

Indoor Unit	Outdoor Unit	ARI Capacities		ARI CFM	Air* Entering Condenser	Air* Entering Evaporator	Air** Entering Evaporator	SEER	HSPF	Sound Rating (dBa)			
		C/O Btuh	H/P Btuh							Indoor Power	Indoor Pressure	Outdoor Power	Outdoor Pressure
619FNX0240W0	538BNX018000	18,000	17,600	525	95 Deg. F	80 Deg. F	67 Deg. F	10.0	6.8	56.3	48.0	67.2	58.9
619FNX0360W0	538BNX024000	25,000	23,800	980	95 Deg. F	80 Deg. F	67 Deg. F	10.7	7.6	54.8	46.5	66.3	58.0
	538BNX030000	29,000	27,000	980	95 Deg. F	80 Deg. F	67 Deg. F	11.5	7.6			65.9	57.6
619FNX0480W0	538BNX036000	33,000	33,000	1,100	95 Deg. F	80 Deg. F	67 Deg. F	10.5	6.8	59.1	50.8	66.2	57.9
	538BPX,BEX036000	34,400	34,000	1,100	95 Deg. F	80 Deg. F	67 Deg. F	10.0	6.8			71.5	63.2

* Dry Bulb
** Wet Bulb

Note: For alternate air entering conditions see the Carrier Product Selector

(MORE)

K. Special Features (Field Installed):

1. Fresh Air Intake Kit:
   Kit shall include filter and duct connections to provide for outdoor ventilation air (must be used with Power Ventilation Kit).

2. Electronic Programmable Thermostat:
   Thermostat shall be commercial grade and shall provide 7-day, 4-event scheduling. Integral sub-base shall be included. Thermostat shall also provide 3-speed fan switchover capability, air sweep auto changeover, and shall not require a battery to retain memory.

3. Power Ventilation Kit:
   Kit must be used with the accessory fresh air kit when fresh air must be ducted in. The kit will overcome duct static to provide a constant supply of ventilation air. Kit consists of booster fan and adjustable speed control to properly balance fan to achieve required airflow rate.

Guide Specifications
Outdoor Cooling Only Units

Commercial Condensing Units

HVAC Guide Specifications
Size range: ¾ to 5 Tons Cooling Capacity
Bryant Model Number: 538C and 538A

Part 1 – General

1.01 SYSTEM DESCRIPTION

A. Outdoor-mounted, air-cooled split system outdoor section suitable for on-the-ground, rooftop, wall hung, balcony, or under-deck installation. Unit shall consist of a hermetic or rotary compressor, an air-cooled coil, propeller-type blow-thru outdoor fans, accumulator, full refrigerant charge, and control box. Unit shall discharge air horizontally as shown on the contract drawings. Units shall function as the outdoor component of an air-to air cooling system.
B. Units shall be used in a refrigeration circuit matched to a duct-free cooling fan coil unit or an approved ducted cooling fan coil unit.

1.02 QUALITY ASSURANCE

A. Unit construction shall comply with ANSI/ASHRAE 15, latest revision, and with the NEC.
B. Units shall be constructed in accordance with UL standards.
C. Units shall be listed in the CEC directory.
D. Unit cabinet shall be capable of withstanding Federal Test Standard No. 141 (method 6061) 500-hour salt spray test.
E. Air-cooled condenser coils shall be leak tested at 350-psig-air pressure with the coil submerged in water.

1.03 DELIVERY, STORAGE, AND HANDLING

Units shall be shipped in one piece and shall be stored and handled per unit manufacturer's recommendations.

1.04 WARRANTY

One-year parts, 5-year compressor limited warranty

(MORE)

Part 2 – Products

2.01 EQUIPMENT

A. General:
Factory assembled, single piece, air-cooled outdoor unit. Contained within the unit enclosure shall be all factory wiring, piping, controls, compressor, full charge of R-22 refrigerant, and special features required prior to field start-up.

B. Unit Cabinet:
1. Unit cabinet shall be constructed of galvanized steel, bonderized and coated with a baked-enamel finish.
2. Unit access panels shall be removable with minimal screws and shall provide full access to the compressor, fan, and control components.
3. Outdoor compartment shall be isolated and have an acoustic lining to assure quiet operation.

C. Fans:
1. Outdoor fans shall be direct-drive propeller type, and shall discharge air horizontally. Fans shall blow air through the outdoor coil.
2. Outdoor fan motors shall be totally enclosed; single-phase motors with class B insulation and permanently lubricated sleeve bearings. Motor shall be protected by internal thermal overload protection.
3. Shaft shall have inherent corrosion resistance.
4. Fan blades shall be corrosion resistant and shall be statically and dynamically balanced.
5. Outdoor fan openings shall be equipped with PVC coated protection grille over fan and coil.

D. Compressor:
1. Compressor shall be fully hermetic reciprocation or scroll type.
2. Compressor shall be equipped with oil system, operating oil charge, and motor. Internal overloads shall protect the compressor from overtemperature and overcurrent. Scroll compressors shall also have high discharge gas temperature protection if required.
3. Motor shall be NEMA rated class F, suitable for operation in a refrigerant atmosphere.
4. Reciprocating compressors shall be equipped with crankcase heaters to minimize liquid refrigerant accumulation in compressor during shutdown and to prevent refrigerant dilution of oil.
5. Compressor assembly shall be installed on rubber vibration isolators and shall have internal spring isolation.
6. Compressors shall be single-phase or 3-phase as specified on the contract drawings.

E. Outdoor Coil:
Coil shall be constructed of aluminum fins mechanically bonded to internally enhanced, seamless copper tubes, which are cleaned, dehydrated, and sealed. **(MORE)**

F. Refrigeration Components:

Refrigerant circuit components shall include brass external liquid line service valve with service gage port connections, suction line service valve with service gage connection port, service gage port connections on compressor suction and discharge lines with Schrader type fittings with brass caps, accumulator, pressure relief, and a full charge of refrigerant.

G. Controls and Safeties:

Operating controls and safeties shall be factory selected, assembled, and tested. The minimum control functions shall include the following:

1. Controls:
   a. Time delay restart to prevent compressor reverse rotation on single-phase scroll compressors.
   b. Automatic restart on power failure.
   c. Safety lockout if any outdoor unit safety is open.
   d. A time delay control sequence provided through the fan coil board, thermostat, or controller.
   e. High-pressure and liquid line low-pressure switches.
   f. Automatic outdoor-fan motor protection.
   g. Start capacitor and relay (single-phase units without scroll compressors).

2. Safeties:
   a. System diagnostics.
   b. Compressor motor current and temperature overload protection.
   c. High-pressure relief.
   d. Outdoor fan failure protection.

H. Electrical Requirements:

1. Nominal ¾ ton unit shall operate on single-phase, 60 Hz power at 115 v. 538A units shall operate on single or three-phase, 60-cycle power at 208/230 v or 460v
2. Unit electrical power shall be a single point connection.
3. Unit control voltage to the indoor-fan coil shall be 24 v, except 538CAX009 and 538CNX012 units which shall supply line voltage.
4. All power and control wiring must be installed per NEC and all local building codes.
5. High and low voltage terminal block connections.

I. Special Features (Field Installed):

Certain features are not applicable 538C series. For assistance in amending the specifications, contact your local Carrier Sales office.

1. Low-Ambient Kit:
   Control shall regulate fan-motor cycles in Reponses to saturated condensing, pressure of the unit. The control shall be capable of maintaining a condensing temperature of 100 F ± 10 F with outdoor temperatures to –20 F. Installation of kit shall not require changing the outdoor-fan motor.

(MORE)

2. Liquid Solenoid Valve:
   This electronically operated shutoff valve shall close and open in response to compressor operation. The valve should be used with all long-line applications (over 100 equivalent ft or 25-ft lift).

3. Winter Start Control (538A)
   Field supplied and installed winter start control shall permit start-up for cooling operation under low-load conditions and at low-ambient temperatures by bypassing the low-pressure switch for a 3-minute delay period.

4. Crankcase Heater (units with scroll compressors only):
   Note: Winter start control shall be required when unit is intended to operate in cooling at outdoor ambients below 40 F. Unit shall be shipped with a clamp-on compressor oil sump heater.

5. Hard Start Kit:
   Field installed accessory start capacitor and start relay shall give a hard boost to compressor motor at each start.

6. Stacking Kits:
   Field installed accessory shall allow stacking of equally sized units or permit smaller units to be stacked on top of larger units. These field installed and fabricated rails can be used for stacking. (538A)

7. Snow Stand Kit:
   Field installed accessory shall raise the outdoor unit above snow and ice surfaces to permit normal air circulation, condensate drainage, and maintenance clearances in areas where prolonged subfreezing temperatures or heavy snow occur.

8. Wind Baffle Kit:
   Field installed accessory shall be fabricated sheet metal wrapper used to provide improved unit operation during high winds, and is recommended whenever the Low Ambient Kit is used.

9. Wall Mount Kit:
   Field installed accessory kit to allow unit mounting to the outside of a structure to raise the unit from ground level, or to mount the unit on a wall adjacent to a sloping roof. Wall mounts are also useful in areas of heavy snowfall or where space is at a premium.

Guide Specifications
Outdoor Heat Pump Only Units

Commercial Condensing Units

HVAC Guide Specifications
Size range: ¾ to 5 Tons Cooling Capacity
Bryant Model Number: 538D and 538B

Part 1 – General

1.01 SYSTEM DESCRIPTION

A. Outdoor-mounted, air-cooled split system outdoor section suitable for on-the-ground, rooftop, wall hung, balcony, or under-deck installation. Unit shall consist of a hermetic reciprocating, scroll, or rotary compressor, an air-cooled coil, propeller-type blow-thru outdoor fans, reversing valve, accumulator, holding refrigerant charge (full refrigerant charge for 538DAX009 and DNX012), heating mode metering device, and control box. Unit shall discharge air horizontally as shown on the contract drawings. Units shall function as the outdoor component of an air-to air cooling and heating system.

B. Units shall be used in a refrigeration circuit matched to a duct-free cooling fan coil unit or an approved ducted cooling fan coil unit.

1.02 QUALITY ASSURANCE

A. Unit construction shall comply with ANSI/ASHRAE 15, latest revision, and with the NEC.

B. Units shall be constructed in accordance with UL standards.

C. Units shall be listed in the CEC directory.

D. Unit cabinet shall be capable of withstanding Federal Test Standard No. 141 (method 6061) 500-hour salt spray test.

E. Air-cooled condenser coils shall be leak tested at 350 psig air pressure with the coil submerged in water.

1.03 DELIVERY, STORAGE, AND HANDLING

Units shall be shipped in one piece and shall be stored and handled per unit manufacturer's recommendations.

1.04 WARRANTY

One-year parts, 5-year compressor limited warranty

(MORE)

Part 2 – Products

2.01 EQUIPMENT

A. General:
Factory assembled, single piece, air-cooled outdoor unit. Contained within the unit enclosure shall be all factory wiring, piping, controls, compressor, full (538DAX009 and 538DNX012) or holding (538DNX018,024 and 538B) charge of R-22 refrigerant, and special features required prior to field start-up.

B. Unit Cabinet:
1. Unit cabinet shall be constructed of galvanized steel, bonderized and coated with a baked-enamel finish.
2. Unit access panels shall be removable with minimal screws and shall provide full access to the compressor, fan, and control components.
3. Outdoor compartment shall be isolated and have an acoustic lining to assure quiet operation.

C. Fans:
1. Outdoor fans shall be direct-drive propeller type, and shall discharge air horizontally. Fans shall blow air through the outdoor coil (538DNX018,024 and 538B only).
2. Outdoor fan motors shall be totally-enclosed, single-phase motors with class B insulation and permanently-lubricated sleeve bearings. Motor shall be protected by internal thermal overload protection.
3. Shaft shall have inherent corrosion resistance.
4. Fan blades shall be corrosion resistant and shall be statically and dynamically balanced.
5. Outdoor fan openings shall be equipped with PVC coated protection grille over fan and coil.

D. Compressor:
1. Compressor shall be fully hermetic reciprocation or scroll type.
2. Compressor shall be equipped with oil system, operating oil charge, and motor. Internal overloads shall protect the compressor from overtemperature and overcurrent. Scroll compressors shall also have high discharge gas temperature protection if required.
3. Motor shall be NEMA rated class F, suitable for operation in a refrigerant atmosphere.
4. Reciprocating compressors shall be equipped with crankcase heaters to minimize liquid refrigerant accumulation in compressor during shutdown and to prevent refrigerant dilution of oil.
5. Compressor assembly shall be installed on rubber vibrations isolators and shall have internal spring isolation.
6. Compressors shall be single-phase or 3-phase as specified on the contract drawings.

(MORE)

E. Outdoor Coil:

Coil shall be constructed of aluminum fins mechanically bonded to internally enhanced, seamless copper tubes which are cleaned, dehydrated, and sealed.

F. Refrigeration Components:

Refrigerant circuit components shall include brass external liquid line service valve with service gage port connections, suction line service valve with service gage connection port, service gage port connections on compressor suction and discharge lines with Schrader type fittings with brass caps, accumulator, bi-flow filter drier, pressure relief, reversing valve, and heating mode metering device.

G. Controls and Safeties:

Operating controls and safeties shall be factory selected, assembled, and tested. The minimum control functions shall include the following:

1. Controls:
   a. Time delay restart to prevent compressor reverse rotation on single-phase scroll compressors.
   b. Automatic restart on power failure.
   c. Safety lockout if any outdoor unit safety is open.
   d. A time delay control sequence provided through the fan coil board, thermostat, or controller.
   e. High-pressure and liquid line low-pressure switches.
   f. Automatic outdoor-fan motor protection.
   g. Start capacitor and relay (single-phase units without scroll compressors).

2. Safeties:
   a. System diagnostics.
   b. Compressor motor current and temperature overload protection.
   c. High pressure relief.
   d. Outdoor fan failure protection.

H. Electrical Requirements:

1. Nominal ¾ ton unit shall operate on single-phase, 60 Hz power at 115 v. All other units shall operate on single-phase, 60 cycle power at 208/230 v.
2. Unit electrical power shall be a single point connection.
3. Unit control voltage to the indoor-fan coil shall be 24 v, except 538DAX009 and 538DNX012 units which shall supply line voltage.
4. All power and control wiring must be installed per NEC and all local building codes.
5. Unit shall have high and low-voltage terminal block connections.

I. Special Features (Field Installed):

1. Low-Ambient Kit:

   Control shall regulate fan-motor cycles in response to saturated condensing, pressure of the unit. The control shall be capable of maintaining a condensing temperature of 100 F ± 10 F with outdoor temperatures to –20 F. Installation of kit shall not require changing the outdoor-fan motor.

(MORE)

2. Liquid Solenoid Valve:

   This electronically operated shutoff valve shall close and open in response to compressor operation. The valve should be used with all long-line applications (over 100 ft.).

3. Crankcase Heater (units with scroll compressors only):

   Unit shall be shipped with a clamp-on compressor oil sump heater.

538 Series Model Number Nomenclature

538A N X 024 000 A

Air Cooled Condenser
538A, 538B, 538C, 538D
38CG, 38SC, 38CS, 38SB

Voltage
A=115-1-60
N=208/230-1-60
P=208/230-3-60
E=460-3-60

X - All Models

Nominal Capacity
009 =3/4 Ton
012 = 1 Ton
018 = 1 1/2 Ton
024 = 2 Tons
030 = 2 1/2 Tons
036 = 3 Tons
048 = 4 Tons
060 = 5 Tons

000 - All Models

Current Series Code
A - All Models

619 Series Model Number Nomenclature

619C N X 012 0E0 A

Indoor Fan Coil Type
619C - Under Ceiling
619E - High Wall
619F - Cassette
40CG, 40CS Console

Voltage
A=115-1-60
N=208/230-1-60

X - All Models

Nominal Capacity
009 =3/4 Ton
012 = 1 Ton
018 = 1 1/2 Ton
024 = 2 Tons
030 = 2 1/2 Tons
036 = 3 Tons
048 = 4 Tons
060 = 5 Tons

Cooling or Heating
0E0 - Cooling Only
0W0 -Heat Pump

Current Series Code
A - All Models

Duct Free Systems - Physical Data - High Wall Units
Cooling and Heat Pump Models

	EAX0090E ***	EAX0120E ***	ENX0120E ***	ENX0180E **	ENX0240E **	EAX0090W *	ENX0120H *	ENX0180H *	ENX0240H *
Nominal Capacity (Tons)	0.75	1	1.0	1.5	2.0	0.75	1.0	1.5	2.0
Operating Weight	18.7	24.2	24.2	38.5	42.9	18.7	24.2	38.5	42.9
Moisture Removal (pts/hr)	2.4	3.4	3.4	5.6	6.3	2.4	3.4	5.6	6.3
Refrigerant Type	R-22	R-22	R-22	R-22	R-22	R-22	R-22	R-22	R-22
Metering Device	Note #4	Note #4	Note #4	Note #5	Note #5	Note #5	Note #5	Note #5	Note #5
Charge (Lbs) Note #1	1.5	1.8	1.8	4.6	5.3	1.5	2.0	4.95	5.1
Indoor Fan (Direct Drive)									
High RPM/CFM	1200/240	1040/300	1040/260	1120/550	1470/570	1200/240	1040/260	1120/530	1470/570
Med RPM/CFM	1100/210	940/280	940/240	1050/500	1370/466	1100/210	940/240	1050/490	1370/466
Low RPM/CFM	1000/180	850/250	850/210	950/450	1270/417	1000/180	850/210	950/430	1270/447
Air Throw ft (high fan)	17	20	20	32	35	17	20	32	35
Motor Watts	34	33	35	44	49	34	35	42.3	49
Blower Wheel									
Quantity	1	1	1	2	2	1	1	2	2
Size	3.54 x 27.75	3.94 x 27.75	3.94 x 27.75	3.94 x 17.75	3.94 x 17.75	3.54 x 27.75	3.94 x 27.75	3.94 x 17.75	3.94 x 17.75
Indoor Coil Data									
Face Area (sq ft)	1.5	1.6	1.6	2.6	2.6	1.5	1.6	2.6	2.6
No Rows	2	2	2	2	3	2	2	2	3
FPI	18	17	17	16	18	18	17	16	18
Circuits	2	3	3	2	3	2	3	2	3
Filters (Cleanable)									
Quantity	2	2	2	3	3	2	2	2	2
Size	9.0 x 12.00	9.5 x 13.75	9.5 x 13.75	11.5 x 17.75	11.5 x 17.75	9.0 x 12.00	9.5 x 13.75	11.5 x 17.75	11.5 x 17.75
Refrigerent Lines									
Connection Type	Male Flare	Male Flare	Male Flare	Male Flare	Male Flare	Male Flare	Male Flare	Flare	Flare
Liquid Line	1/4" od	1/4" od	1/4" od	3/8 od	3/8 od	1/4" od	1/4" od	3/8 od	3/8 od
Vapor Line	1/2" od	1/2" od	1/2" od	5/8" od	5/8" od	1/2" od	1/2" od	5/8" od	5/8" od
Max Length, Lift & Drop	Note #3	Note #3	Note #3	Note #3	Note #3	Note #3	Note #3	Note #3	Note #3
Condensate Drain									
Outside Dia	5/8"	5/8"	5/8"	5/8"	5/8"	5/8"	5/8"	5/8"	5/8"
Inside Dia	7/16"	7/16"	7/16"	7/16"	7/16"	7/16"	7/16"	7/16"	7/16"
Controls (Microprocessor)									
Remote (Wireless I/R)	Yes	Yes	Yes	Yes	Yes	Yes	Yes	Yes	Yes
Freeze Protection	Yes	Yes	Yes	Yes	Yes	Yes	Yes	Yes	Yes
Defrost Method	n/a	n/a	n/a	n/a	n/a	Demand	Demand	Demand	Demand
Warm Start	n/a	n/a	n/a	n/a	n/a	Yes	Yes	Yes	Yes
Auto Change Over	n/a	n/a	n/a	n/a	n/a	Yes	Yes	Yes	Yes
Auto Restart	Yes	Yes	Yes	Yes	Yes	Yes	Yes	Yes	Yes
Diagnostics	Yes	Yes	Yes	Yes	Yes	Yes	Yes	Yes	Yes
Timer Mode (Start/Stop)	24 Hr	24 Hr	24 Hr	24 Hr	24 Hr	24 Hr	24 Hr	24 Hr	24 Hr
Test Mode	Yes	Yes	Yes	Yes	Yes	Yes	Yes	Yes	Yes
Dehumidification Mode	Yes	Yes	Yes	Yes	Yes	Yes	Yes	Yes	Yes
Fan Speeds	H/M/L/Auto	H/M/L/Auto	H/M/L/Auto	H/M/L/Auto	H/M/L/Auto	H/M/L/Auto	H/M/L/Auto	H/M/L/Auto	H/M/L/Auto
Control Voltage	115v	115v	230v	24v	24v	115v	230v	24v	24v
System Voltage	115v	115v	208/230v	208/230v	208/230v	115v	208/230v	208/230v	208/230v
Air Sweep									
Horizontal	Manual	Manual	Manual	Manual	Manual	Manual	Manual	Manual	Manual
Vertical	Automatic	Automatic	Automatic	Automatic	Automatic	Automatic	Automatic	Automatic	Automatic
Finish	White	White	White	White	White	White	White	White	White

Notes:
1) Cooling only units are shipped with a full factory charge in the outdoor unit based on 25' of refrigerent lines. Heat Pump units are shipped with a holding charge
2) See Applications Data Section for long line lengths
3) See matching condenser for line lengths
4) Capillary in outdoor unit
5) Cooling AccuRater in indoor unit. Heating AccuRater in outdoor unit.

Legend
* These units may only be matched with 538D outdoor units.
** These units may only be matched with 538A, and 538SNX outdoor units.
*** These units may only be matched with 538C outdoor units.

Rev "A"
01/15/02

Duct Free Systems - Physical Data - Under Ceiling Units

	CNX0180E ^	CNX0240E	CNX0360E	CNX0480E	CNX0600E	CNX0180W ^	CNX0240W	CNX0360W	CNX0480W	CNX0600W
Nominal Capacity (Tons)	1.5	2.0	3.0	4.00	5.0	1.5	2.0	3.0	4.0	5.00
Operating Weight	108	108	117	149	179	110	110	119	151	181
Moisture Removal (pts/hr)	5.8	7.1	9.5	13.4	15.1	5.8	7.1	9.5	13.4	15.1
Refrigerant Type	R-22	R-22	R-22	R-22	R-22	R-22	R-22	R-22	R-22	R-22
Metering Device - Note#3	AccuRater	AccuRater	AccuRater	AccuRater	AccuRater	AccuRater	AccuRater	AccuRater	AccuRater	AccuRater
Charge (Lbs) - Note #4	3.7	5.5	5.4	7.4	13.6	4.3	6.3	Note #6	10.0	11.9
Indoor Fan (Direct Drive)										
High RPM/CFM	862/500	1050/600	1275/840	1435/1200	1275/1600	900/480	1050/550	1275/870	1435/1130	1275/1600
Med RPM/CFM	690/400	690/400	972/740	1388/1160	972/1220	862/400	900/480	972/750	1388/975	972/1220
Low RPM/CFM	552/320	552/320	830/640	1315/1100	830/1040	770/320	862/400	830/630	1315/820	830/1040
Air Throw ft (high fan)	25	30	40	45	45	25	27	38	40	40
Watts	92	92	282	425	564	92	92	282	425	564
Quantity	1	1	1	2	2	1	1	1	2	2
HP	1/16	1/16	1/6	1/6 & 1/16	1/6	1/16	1/16	1/6	1/6 & 1/16	1/6
Blower Wheel										
Quantity	2	2	2	3	4	2	2	2	3	4
Size	6" x 8"	6" x 8"	6" x 8"	6" x 8"	6" x 8"	6" x 8"	6" x 8"	6" x 8"	6" x 8"	6" x 8"
Indoor Coil Data										
Face Area (sq ft)	2.2	2.2	2.6	3.0	4.0	2.2	2.2	2.6	3.0	4.0
No Rows	4	4	4	4	4	4	4	4	4	4
FPI	15	15	15	15	15	15	15	15	15	15
Circuits	4	4	4	8	8	4	4	4	8	8
Filters (Cleanable)										
Quantity	4	4	5	Note #1	6	4	4	5	Note #1	6
Size	12" x 8.75"	12" x 8.75"	10.6" x 8.7"	Note #1	12" x 8.75"	12" x 8.75"	12" x 8.75"	10.6" x 8.7"	Note #1	12" x 8.75"
Refrigerent Lines										
Connection Type	Flare	Flare	Flare	Flare	Flare	Flare	Flare	Flare	Flare	Flare
Liquid Line	3/8" od	3/8" od	3/8" od	3/8" od	3/8" od	3/8" od	3/8" od	3/8" od	3/8" od	3/8" od
Vapor Line	5/8" od	5/8" od	3/4" od	3/4" od	3/4" od	5/8" od	5/8" od	3/4" od	7/8" od *	7/8" od *
Max Length, Life & Drop	Note #7	Note #7	Note #7	Note #7	Note #7	Note #7	Note #7	Note #7	Note #7	Note #7
Condensate Drain										
Outside Dia (Male pipe thd)	3/4"	3/4"	3/4"	3/4"	3/4"	3/4"	3/4"	3/4"	3/4"	3/4"
Note #5										
Controls (Solid State)										
Wall S'tat	Yes	Yes	Yes	Yes	Yes	Yes	Yes	Yes	Yes	Yes
Freeze Protection	n/a	n/a	n/a	n/a	n/a	Yes ***	Yes ***	Yes ***	Yes ***	Yes ***
Defrost Method	n/a	n/a	n/a	n/a	n/a	Time/Temp	Time/Temp	Time/Temp	Time/Temp	Time/Temp
Warm Start	n/a	n/a	n/a	n/a	n/a	n/a	n/a	n/a	n/a	n/a
Auto Change Over	n/a	n/a	n/a	n/a	n/a	Yes	Yes	Yes	Yes	Yes
Auto Restart	Yes	Yes	Yes	Yes	Yes	Yes	Yes	Yes	Yes	Yes
Diagnostics	Yes **	Yes **	Yes **	Yes **	Yes **	Yes **	Yes **	Yes **	Yes **	Yes **
Timer Mode (Start/Stop)	24 Hr **	24 Hr **	24 Hr **	24 Hr **	24 Hr **	24 Hr **	24 Hr **	24 Hr **	24 Hr **	24 Hr **
Test Mode	Yes	Yes	Yes	Yes	Yes	Yes	Yes	Yes	Yes	Yes
Dehumidification Mode	n/a	n/a	n/a	n/a	n/a	n/a	n/a	n/a	n/a	n/a
Fan Speeds	H/M/L/Auto	H/M/L/Auto	H/M/L/Auto	H/M/L/Auto	H/M/L/Auto	H/M/L/Auto	H/M/L/Auto	H/M/L/Auto	H/M/L/Auto	H/M/L/Auto
Control Voltage	24v	24v	24v	24v	24v	24v	24v	24v	24v	24v
System Voltage	208/230v	208/230v	208/230v	208/230v	208/230v	208/230v	208/230v	208/230v	208/230v	208/230v
Air Sweep										
Horizontal	n/a	n/a	n/a	n/a	n/a	n/a	n/a	n/a	n/a	n/a
Vertical	Automatic	Automatic	Automatic	Automatic	Automatic	Automatic	Automatic	Automatic	Automatic	Automatic
Finish	Note #2	Note #2	Note #2	Note #2	Note #2	Note #2	Note #2	Note #2	Note #2	Note #2

Notes:
1) 4 Pcs 10.6" x 8.7" and 2 pcs 12.0" x 8.7"
2) GM Motorhome White with Black Trim
3) Metering device located in the indoor unit.
4) Cooling only units are shipped with a full factory charge in the outdoor unit based on 25' of refrigerent lines. Heat Pump units are shipped with a holding charge
5) Flexible tubing (5/8") required when optional condensate pump is used.
6) Single phase unit 7.5 lbs, 3 phase unit 8.7 lbs
7) See matching condenser for line lengths

Legend
* Valve connection size is 3/4". Recommended line size is 7/8".
** With recommended thermostat
*** Through outdoor unit low pressure switch
^ The CNX0180E & W fan coil is a CNX0240E & W unit using a different motor speed fan tap. Refer to installation instructions for details
^^ Field configured for 1.5 tons using a different motor speed fan tap Refer to installation instructions for details

01/15/02

Duct Free Systems - Physical Data - Indoor Console Units

	40CG-018	40CG-024	40CG-030	40CS-018	40CS-024	40CS-030
Nominal Capacity (Tons)	1.5	2	2.5	1.5	2	2.5
Operating Weight (lbs)	66	77	77	66	77	77
Moisture Removal (pts/hr)	4.2	5.9	7.8	4.2	5.9	7.8
Refrigerant Type	R-22	R-22	R-22	R-22	R-22	R-22
Metering Device	Capillary	Capillary	Capillary	Capillary	Capillary	Capillary
Charge (Lbs) - Note #4	5.2	4.7	6.2	5.2	4.7	6.2
Indoor Fan (Direct Drive)						
High RPM/CFM	1450/650	1450/800	1450/800	1450/650	1450/800	1450/800
Med RPM/CFM	1070/500	1070/650	1070/650	1070/500	1070/650	1070/650
Low RPM/CFM	880/400	880/500	880/500	880/400	880/500	880/500
Air Throw ft (high fan)						
Watts	93	93	93	93	93	93
Quantity	1	1	1	1	1	1
HP	1/8	1/8	1/8	1/8	1/8	1/8
Blower Wheel						
Quantity	2	2	2	2	2	2
Diameter	5.9	5.9	5.9	5.9	5.9	5.9
Length	8.6	8.6	8.6	8.6	8.6	8.6
Indoor Coil Data						
No Rows	4	4	4	4	4	4
FPI	14	14	14	14	14	14
Circuits	4	4	4	4	4	4
Filters (Washable)						
Quantity	2	3	3	2	3	3
Refrigerent Lines						
Connection Type	Flare	Flare	Flare	Flare	Flare	Flare
Liquid Line	1/4 od	3/8 od	3/8 od	1/4 od	3/8 od	3/8 od
Vapor Line	1/2 od	5/8 od	5/8 od	1/2 od	5/8 od	5/8 od
Max Length	98'	131'	98'	98'	131'	98'
Lift	49'	66'	33'	49'	66'	33'
Drop	49'	66'	33'	49'	66'	33'
Condensate Drain						
Flexible Tube	dia					
Controls (Solid State)						
Remote Control	Yes	Yes	Yes	Yes	Yes	Yes
Freeze Protection	n/a	n/a	n/a	Yes	Yes	Yes
Defrost Method	n/a	n/a	n/a	Time/Temp	Time/Temp	Time/Temp
Auto Change Over	Yes	Yes	Yes	Yes	Yes	Yes
Auto Restart	Yes	Yes	Yes	Yes	Yes	Yes
Diagnostics	Yes	Yes	Yes	Yes	Yes	Yes
Timer Mode (Start/Stop)	Yes	Yes	Yes	Yes	Yes	Yes
Test Mode	Yes	Yes	Yes	Yes	Yes	Yes
Dehumidification Mode	Yes	Yes	Yes	Yes	Yes	Yes
Fan Speeds	H/M/L/Auto	H/M/L/Auto	H/M/L/Auto	H/M/L/Auto	H/M/L/Auto	H/M/L/Auto
Control Voltage	Line Voltage	Line Voltage	Line Voltage	Line Voltage	Line Voltage	Line Voltage
System Voltage	208/230 v	208/230 v	208/230 v	208/230 v	208/230 v	208/230 v
Air Sweep						
Horizontal	Manual	Manual	Manual	Manual	Manual	Manual
Vertical	Automatic	Automatic	Automatic	Automatic	Automatic	Automatic
Finish	White	White	White	White	White	White

Duct Free Systems - Physical Data - Cassette Units
Cooling And Heat Pump Models

	FNX0240E	FNX0360E *	FNX0360E	FNX0240W	FNX0360W	FNX0480W
Nominal Capacity (Tons)	1.5	2.0	3.0	2.0	3.0	4.0
Operating Weight	61.6	105.8	105.8	66.1	105.8	118.0
Moisture Removal (pts/hr)	7.0	9.6	9.6	7.0	8.6	9.6
Refrigerant Type	R-22	R-22	R-22	R-22	R-22	R-22
Metering Device	Note #4	TXV	AccuRater	AccuRater	AccuRater	AccuRater
Charge (Lbs) Note #3	Note #5		6.0	5.5	Note #1	Note #1
Indoor Fan (Direct Drive)						
High RPM/CFM	1190/525	970/915	970/915	1190/525	970/915	1180/1100
Med RPM/CFM	930/415	790/745	790/745	930/430	790/745	920/880
Low RPM/CFM	840/400	635/635	635/635	840/400	635/635	830/680
Air Throw ft (high fan)	22	20	20	22	20	20
Watts	100	180	180	100	160	180
Quantity	1	2	2	1	2	2
HP	1/16	1/16	1/16	1/16	1/16	1/16
Blower Wheel						
Quantity	1	2	2	1	2	2
Size	10" x 8"	10" x 8"	10" x 8"	10" x 8"	10" x 8"	10" x 8"
Indoor Coil Data						
Face Area (sq ft)	2.66	5.67	5.67	2.66	5.67	5.67
No Rows	3	2	2	3	2	2
FPI	14	14	14	14	14	14
Circuits	4	4	4	4	4	4
Filters (Cleanable)						
Quantity	1	2	2	1	2	2
Size	16.5" x 16.5"	16.5" x 16.5"	16.5" x 16.5"	16.5" x 16.5"	16.5" x 16.5"	16.5" x 16.5"
Refrigerent Lines						
Connection Type	Flare	Flare	Flare	Flare	Flare	Flare
Liquid Line	3/8" od	3/8" od	3/8" od	3/8" od	3/8" od	3/8" od
Vapor Line	5/8" od	3/4" od	3/4"od	5/8"od	3/4" od	3/4" od
Max Length, Lift & Drop	Note #2	Note #2	Note #2	Note #2	Note #2	Note #2
Condensate Drain						
Connection	Hose	Hose	Hose	Hose	Hose	Hose
Size	1.0" Dia	1.0" Dia	1.0" Dia	1.0"Dia	1.0" Dia	1.0" Dia
Controls (Solid State)						
Wall Stat	Yes	Yes	Yes	Yes	Yes	Yes
Freeze Protection	n/a	n/a	n/a	Yes ***	Yes ***	Yes ***
Defrost Method	n/a	n/a	n/a	Time/Temp	Time/Temp	Time/Temp
Warm Start	n/a	n/a	n/a	n/a	n/a	n/a
Auto Change Over	n/a	n/a	n/a	Yes	Yes	Yes
Auto Restart	Yes	Yes	Yes	Yes	Yes	Yes
Diagnostics	Yes **	Yes **	Yes **	Yes **	Yes **	Yes **
Timer Mode (Start/Stop)	24 Hr **	24 Hr **	24 Hr **	24 Hr **	24 Hr **	24 Hr **
Test Mode	Yes	Yes	Yes	Yes	Yes	Yes
Dehumidification Mode	n/a	n/a	n/a	n/a	n/a	n/a
Fan Speeds	H/M/L/Auto/C	H/M/L/Auto/C	H/M/L/Auto/C	H/M/L/Auto/C	H/M/L/Auto/C	H/M/L/Auto/C
Control Voltage	24v	24v	24v	24v	24v	24v
System Voltage	208/230v	208/230v	208/230v	208/230v	208/230v	208/230v
Air Sweep						
Horizontal	n/a	n/a	n/a	n/a	n/a	n/a
Vertical	n/a	n/a	n/a	n/a	n/a	n/a
Finish	Ceiling White	Ceiling White	Ceiling White	Ceiling White	Ceiling White	Ceiling White

Notes:
1) System charge single phase unit 5.9 lbs, 3 phase unit 8.0 lbs.
2) See matching condenser for line lenghts
3) Cooling only units are shipped with a full factory charge in the outdoor unit based on 25' of refrigerent lines. Heat Pump units are shipped with a holding charge
4) AccuRater when matched with 538A, TXV when matched with SNX.
5) When matched with 538A 4.8 lbs. When matched with SNX 5.0 lbs.

Legend
* When matched with the 538SNX
** With recommended thermostat
*** Through outdoor unit low presure switch

01/15/02

Product

Physical Data : Condenser – Section 8

- CAX, CNX, DAX, DNX
- ANX, APX, AEX
- BNX, BPX, BEX
- SNX
- Console

Duct Free Systems - Physical Data - 538 Series Condensers
Cooling Only and Heat Pump Models

	CAX009 *	CNX012 *	DAX009 *	DNX012 *	DNX018 *	DNX024 *
Nominal Capacity (Tons)	0.75	1.0	0.75	1.0	1.5	2.0
Operating Weight	55	62	61	67	154	167
Refrigerant Type	R-22	R-22	R-22	R-22	R-22	R-22
Metering Device	Capillary	Capillary	Note #1	Note #1	Note #2	Note #2
Charge (Lbs) Note #3	1.5	1.8	1.5	2.0	1.5	1.5
Outdoor Fan						
RPM/CFM	850/750	850/750	850/756	850/756	850/1720	850/1720
Diameter	12.25"	12.25"	12.25"	12.25"	18.0"	18.0"
No Blades	4	4	4	4	3	3
Watts	87	87	87	87	1/8 hp	1/8 hp
Coil Data						
Face Area (sq ft)	3.5	3.5	3.5	3.5	6.1	6.1
No Rows	1	2	1	2	1.5	2
FPI	18	17	18	17	15	15
High Pressure (psig)						
Cut-In	n/a	n/a	n/a	n/a	320 +/-20	320 +/-20
Cut-Out	n/a	n/a	n/a	n/a	426 +/-7	426 +/-7
Low Pressure						
Cut-In	n/a	n/a	n/a	n/a	22 +/-5	22 +/-5
Cut-Out	n/a	n/a	n/a	n/a	7 +/-3	7 +/-3
Refrigerent Lines						
Connection Type	Male Flare	Male Flare	Male Flare	Male Flare	Sweat/Flare	Sweat/Flair
Liquid Line	1/4" od	1/4" od	1/4" od	1/4" od	3/8" od (F)	3/8" od (F)
Vapor Line	1/2" od	1/2" od	1/2" od	1/2" od	5/8" od (S)	5/8" od (S)
Max Length	35'	35'	35'	35'	200'	200'
Max Lift	16'	16'	16'	16'	65'	65'
Max Drop	30'	30'	30'	30'	150'	150'
Compressor						
Manufacturer	Daewoo	Daewoo	Daewoo	Daewoo	Tecumseh	Tecumseh
Model	EAA090111A	EBB120111A	EBA095111H	EBB130111H	AW5519G	AW5524G
Type	Rotary	Rotary	Rotary	Rotary	Recip	Recip
Oil Charge (oz)	10.1	10.1	10.1	10.1	30.0	30.0
Crankcase Heater	None	None	40 Watts	40 Watts	19 Watts	19 Watts
Accumulator	Yes	Yes	Yes	Yes	Yes	Yes
Controls						
Fusible Plug (F)	210	210	210	210	210	210
Control Voltage	115v	208/230v	115v	208/230v	24V	24V
System Voltage	115v	208/230v	115v	208/230v	208/230v	208/230v
Defrost Method	n/a	n/a	Demand	Demand	Time/Temp**	Time/Temp**
Finish	Beige	Beige	White	White	Gray	Gray

Notes:
1) AccuRater at outdoor unit
2) AccuRater at outdoor unit for heating and indoor unit for cooling.
3) Cooling only units are shipped with a full factory charge.
Heat Pump units are shipped with a holding charge

Legend
* These units may only be used with 619E fan coils.
** Demand defrost when used with 619EAX0090W

01/15/02

Duct Free Systems - Physical Data - 538 SeriesCondensers
Cooling Only Models

	ANX0180	ANX0240	ANX0300	ANX0360	APX/AEX0360	ANX0480	APX/AEX0480	ANX0600	APX/AEX0600
Nominal Capacity (Tons)	1.5	2.0	2.50	3.0	3.0	4.0	4.0	5.0	5.0
Operating Weight	150	154	169	179		270	270	290	290
Refrigerant Type	R-22	R-22	R-22	R-22	R-22	R-22	R-22	R-22	R-22
Metering Device - Note #2	AccuRater	AccuRater	AccuRater	AccuRater	AccuRater	AccuRater	AccuRater	AccuRater	AccuRater
Charge (Lbs) Note #3	3.6*	4.8*	5.2*	5.4*		7.4*	7.4	13.6*	13.6*
Outdoor Fan									
RPM/CFM	850/1720	850/1720	850/1720	850/1720		850/3900	850/3900	850/3900	850/3900
Diameter	18"	18"	18"	18"		24"	24"	24"	24"
No Blades	3	3	3	3		3	3	3	3
Watts	1/8 HP	1/8 HP	1/8 HP	1/8 HP		1/4 hp	1/4 hp	1/4 hp	1/4 hp
Coil Data									
Face Area (sq ft)	6.1	6.1	6.1	6.1		12.3	12.3	12.3	12.3
No Rows	1.5	2	3	3		2	2	3	3
FPI	15	15	15	15		15	15	15	15
High Pressure (psig)									
Cut-In	320+/-20	320+/-20	320+/-20	320+/-20	320+/-20	320+/-20	320+/-20	320+/-20	320+/-20
Cut-Out	426 +/-7	426 +/-7	426 +/-7	426 +/-7	426 +/-7	426 +/-7	426 +/-7	426 +/-7	426 +/-7
Low Pressure									
Cut-In	22 +/-5	22 +/-5	22 +/-5	22 +/-5	22 +/-5	22 +/-5	22 +/-5	22 +/-5	22 +/-5
Cut-Out	7 +/-3	7 +/-3	7 +/-3	7 +/-3	7 +/-3	7 +/-3	7 +/-3	7 +/-3	7 +/-3
Refrigerent Lines									
Connection Type	Sweat	Sweat	Sweat	Sweat	Sweat	Sweat	Sweat	Sweat	Sweat
Liquid Line	3/8" od	3/8" od	3/8" od	3/8" od	3/8" od	3/8" od	3/8" od	3/8" od	3/8" od
Vapor Line	5/8" od	5/8" od	3/4" od	7/8" od ***	7/8" od	7/8" od	7/8" od	1 1/8" od ^	1 1/8" od ^
Max Length	200'	200'	200'	200'	200'	200'	200'	200'	200'
Max Lift	65'	65'	65'	65'	65'	65'	65'	65'	65'
Max Drop	150'	150'	150'	150'	150'	150'	150'	150'	150'
Compressor									
Manufacturer	Tecumseh	Copeland	Copeland	Copeland		Copeland		Carrier	
Model	AW5517G	ZR24K3	ZR28K3	ZR34K3		ZR49K3		SY60AC	
Type	Recip	Scroll	Scroll	Scroll		Scroll		Scroll	
Oil Charge (oz)	30.0	25.0	25.0	38.0		53.0		52.0	
Heater	19 Watts	None	None	None		None		None	
Accumulator	Yes	Yes	Yes	Yes		Yes		Yes	
Controls									
Fusible Plug (F)	210	210	210	210	210	210	210	210	210
Cotrol Voltage **	24v	24v	24v	24v	24v	24v	24v	24v	24v
System Voltage	208/230v	208/230v	208/230v	208/230v	Note #1	208/230v	Note #1	208/230v	Note #1
Defrost Method	n/a	n/a	n/a	n/a	n/a	n/a	n/a	n/a	n/a
Finish	Gray	Gray	Gray	Gray	Gray	Gray	Gray	Gray	Gray

Notes:
1) Available in 208/230v, 3 Phase and 460v, 3 phase
2) AccuRater located at fan coil
3) Unit shipped with full factory charge

Legend
* See piston guide and charge table section for proper charge and piston for each fan coil type.
** 24v and a minimum of 40va is provided in the fan coil unit.
*** Valve connection size is 3/4" Recommended line size is 7/8"
^ Valve connection size is 7/8" Recommended line size is1 1/8"

01/15/02

Duct Free Systems - Physical Data - 538 Series Condensers
Heat Pump Models

	BNX0180	BNX0240	BNX0300	BNX0360	BPX/BEX0360	BNX0480	BPX/BEX0480	BNX0600	BPX/BEX0600
Nominal Capacity (Tons)	1.5	2.0	2.50	3.0	3.0	4.0	4.0	5.0	5.0
Operating Weight	154	167	180	184	249	252	252	272	272
Refrigerant Type	R-22	R-22	R-22	R-22	R-22	R-22	R-22	R-22	R-22
Metering Device - Note #2	AccuRater	AccuRater	AccuRater	AccuRater	AccuRater	AccuRater	AccuRater	AccuRater	AccuRater
Charge (Lbs) - Note #3	1.5*	1.5*	1.5*	1.5*	2.0*	2.0*	2.0*	2.0*	2.0*
Outdoor Fan									
RPM/CFM	850/1720	850/1720	850/1720	850/1720	850/3900	850/3900	850/3900	850/3900	850/3900
Diameter	18"	18"	18"	18"	24"	24"	24"	24"	24"
No Blades	3	3	3	3	3	3	3	3	3
Watts	1/8 HP	1/8 HP	1/8 HP	1/8 HP	1/4 hp	1/4 HP	1/4 HP	1/4 HP	1/4 HP
Coil Data									
Face Area (sq ft)	6.1	6.1	6.1	6.1	12.3	12.3	12.3	12.3	12.3
No Rows	1.5	2	3	3	2	2	2	3	3
FPI	15	15	15	15	15	15	15	15	15
High Pressure (psig)									
Cut-In	320 +/-20	320 +/-20	320 +/-20	320 +/-20	320 +/-20	320 +/-20	320 +/-20	320 +/-20	320 +/-20
Cut-Out	426 +/-7	426 +/-7	426 +/-7	426 +/-7	426 +/-7	426 +/-7	426 +/-7	426 +/-7	426 +/-7
Low Pressure									
Cut-In	22 +/-5	22 +/-5	22 +/-5	22 +/-5	22 +/-5	22 +/-5	22 +/-5	22 +/-5	22 +/-5
Cut-Out	7 +/-3	7 +/-3	7 +/-3	7 +/-3	7 +/-3	7 +/-3	7 +/-3	7 +/-3	7 +/-3
Refrigerent Lines									
Connection Type	Sweat/Flair	Sweat/Flair	Sweat/Flair	Sweat/Flair	Sweat/Flair	Sweat/Flair	Sweat/Flair	Sweat/Flair	Sweat/Flair
Liquid Line (Flair)	3/8" od	3/8" od	3/8" od	3/8" od	3/8" od	3/8" od	3/8" od	3/8" od	3/8" od
Vapor Line (Sweat)	5/8" od	5/8" od	3/4" od	7/8" od***	3/4" od	7/8" od	7/8 od	1 1/8" od^	1 1/8" od
Max Length	200'	200'	200'	200'	200'	200'	200'	200'	200'
Max Lift	65'	65'	65'	65'	65'	65'	65'	65'	65'
Max Drop	150'	150'	150'	150'	150'	150'	150'	150'	150'
Compressor									
Manufacturer	Tecumseh	Tecumseh	Copeland	Copeland	Copeland	Tecumseh		Copeland	
Model	AW5519G	AW5524G	ZR28K3	ZR34K3	CRH3-0275	AV5549G		CRP5-0450	
Type	Recip	Recip	Scroll	Scroll	Recip	Recip		Recip	Scroll
Oil Charge (oz)	30.0	30.0	24.0	30.0	51.0	50.0		66.0	
Heater	19 Watts	19 Watts	None	None	40 watts	27 Watts		40 Watts	
Accumulator	Yes	Yes	Yes	Yes	Yes	Yes	Yes	Yes	Yes
Controls									
Fusible Plug (F)	210	210	210	210	210	210	210	210	210
Control Voltage	24v	24v	24v	24v	24v	24v	24v	24v	24v
System Voltage	208/230v	208/230v	208/230v	208/230v	Note #1	208/230v	Note #1	208/230v	Note #1
Defrost Method	Time/Temp	Time/Temp	Time/Temp	Time/Temp	Time/Temp	Time/Temp	Time/Temp	Time/Temp	Time/Temp
Finish	Gray	Gray	Gray	Gray	Gray	Gray	Gray	Gray	Gray

Notes:
1) Available in 208/230v, 3 Phase and 460v, 3 phase
2) AccuRater at outdoor unit for heating and indoor unit for cooling.
3) Units shipped with holding charge only

Legend
* See piston guide and charge table section for proper charge and piston for each fan coil type.
** 24v and a minimum of 40va is provided in the fan coil unit.
*** Valve connection size is 3/4" Recommended line size is 7/8"
^ Valve connection size is 7/8" Recommended line size is1 1/8"

01/15/02

Duct Free Systems - Physical Data - 538 Series Condensers
Cooling Only Models

	SNX0240	SNX0480
Nominal Capacity (Tons)	2.0	4.0
Operating Weight	159	292
Refrigerant Type	R-22	R-22
Metering Device	TXV - Cond	TXV - Cond
Charge (Lbs) - Note #2	5.0*	5.5*
Outdoor Fan		
RPM/CFM	850/1720	850/3900
Diameter	18"	24"
No Blades	3	3
Watts	1/8 HP	1/4 hp
Coil Data		
Face Area (sq ft)	6.1	12.3
No Rows	2	2
FPI	15	15
High Pressure (psig)		
Cut-In	320 +/-20	320 +/-20
Cut-Out	426 +/-7	426 +/-7
Low Pressure (psig)		
Cut-In	22 +/-5	22 +/-5
Cut-Out	7 +/-3	7 +/-3
Refrigerent Lines		
Connection Type	Sweat	Sweat
Liquid Line	3/8" od (2)	3/8" od (4)
Vapor Line	5/8" od (2)	5/8" od (4)
Max Length	50'	50'
Max Lift	30'	30'
Max Drop	30'	30'
Compressor		
Manufacturer	Copeland	Copeland
Model	ZR23K3	ZR49K3 (2)
Type	Scroll	Scroll
Oil Charge (oz)	25.0	53.0
Heater	None	None
Accumulator	Yes	Yes
Controls		
Fusible Plug (F)	210	210
Control Voltage	24v	24v
System Voltage	208/230v	208/230v
Defrost Method	n/a	n/a
Finish	Gray	Gray

Notes:
1) Charge based on 25' of interconnecting tubing
2) Unit shipped with full factory charge

Legend
* See piston guide and charge table section for proper charge and piston for each fan coil type.
** 24v and a minimum of 40va is provided in the fan coil unit.
TXV Thermostatic Expansion Valve

01/15/02

Duct Free Systems - Physical Data - Console Series Condensers
Cooling Only & Heat Pump Models

	38CG-018	38CG-24	38CG-30	38CS-018	38CS-24	38CS-30	38SC-30	38SB-30
Nominal Capacity (Tons)	1.5	2	2.5	1.5	2	2.5	2.5	2.5
Operating Weight	143	143	165	143	143	165	330	330
Refrigerant Type	R-22	R-22	R-22	R-22	R-22	R-22	R-22	R-22
Metering Device	Capillary	Capillary	Capillary	Capillary	Capillary	Capillary	Capillary	Capillary
Charge (Lbs)	5.2	4.7	6.2	5.2	4.7	6.2	12.4	12.4
Outdoor Fan								
CFM (High/Low)	2300/1800	2300/1800	2300/1800	2300/1800	2300/1800	2300/1800	2300/1800 *	2300/1800 *
RPM (High/Low)	1000/700	1000/700	1000/700	1000/700	1000/700	1000/700	1000/700 *	1000/700 *
Diameter	20"	20"	20"	20"	20"	20"	20" *	20" *
No Blades	6	6	6	6	6	6	6 *	6 *
Size	1/5 HP	1/5 HP	1/5 HP	1/5 HP	1/5 HP	1/5 HP	1/5 HP *	1/5 HP *
Coil Data								
No Circuits	4	4	4	4	4	4	4 **	4 **
No Rows	2	2	3	2	2	3	3 **	3 **
FPI	12	12	12	12	12	12	12	12
High Pressure (psig)								
Cut-In	n/a	n/a	n/a	n/a	n/a	n/a	n/a	n/a
Cut-Out	n/a	n/a	n/a	n/a	n/a	n/a	n/a	n/a
Low Pressure								
Cut-In	n/a	n/a	n/a	n/a	n/a	n/a	n/a	n/a
Cut-Out	n/a	n/a	n/a	n/a	n/a	n/a	n/a	n/a
Refrigerent Lines								
Connection Type	Flare	Flare	Flare	Flare	Flare	Flare	Flare	Flare
Liquid Line	1/4 od	3/8" od	3/8" od	1/4 od	3/8" od	3/8" od	3/8" od	3/8" od
Vapor Line	1/2 od	5/8" od	5/8" od	1/2 od	5/8" od	5/8" od	5/8" od	5/8" od
Max Length	98'	131'	98'	98'	131'	98'	98'	98'
Max Lift	49'	66'	33'	49'	66'	33'	33'	33'
Max Drop	49'	66'	33'	49'	66'	33'	33'	33'
Compressor								
Manufacturer	Bristol	Bristol	Bristol	Bristol	Bristol	Bristol	Bristol	Bristol
Model	H25B18QABCA	H25B24QABCA	H25B35QABCA	H25B18QABCA	H25B24QABCA	H25B35QABCA	H25B35QABCA	H25B35QABCA
Type	Recip	Recip	Recip	Recip	Recip	Recip	Recip	Recip
Oil Re-Charge (oz)	32	32	37	32	32	37	37	37
Oil Type	3GS	3GS	3GS	3GS	3GS	3GS	3GS	3GS
Heater	n/a	n/a	n/a	Yes	Yes	Yes	n/a	Yes
Accumulator	No	No	No	No	No	No	No	No
Controls								
Fusible Plug (F)	n/a	n/a	n/a	n/a	n/a	n/a	n/a	n/a
Cotrol Voltage	Line Voltage	Line Voltage	Line Voltage	Line Voltage	Line Voltage	Line Voltage	Line Voltage	Line Voltage
System Voltage	208/230v	208/230v	208/230v	208/230v	208/230v	208/230v	208/230v	208/230v
Defrost Method	n/a	n/a	n/a	Time/Temp	Time/Temp	Time/Temp	n/a	Time/Temp
Finish	Tan	Tan	Tan	Tan	Tan	Tan	Tan	Tan

Notes:

1) Unit shipped with full factory charge

Legend

* At each Fan

** Two Coils

01/15/02

Sound Data "High Wall" Fan Coils (A Weighed)

Model	Sound Pressure (dBa)	Sound Power (dBa)	Fan Speed	Sound Power Data Octave Band (dBa)						
				125	250	500	1000	2000	4000	8000
619EAX0090E0	42.1	50.4	High	36.5	40.3	45.2	48.2	42.3	33.2	31.2
	39.2	47.5	Medium	32.8	37.9	43.6	44.9	39.1	29.8	31.2
	36.2	44.5	Low	31.7	36.6	41.6	41.6	35.4	27.7	31.2
619ENX0120E0 115V & 230V	45.7	54.0	High	36.7	43.5	50.2	51.1	46.5	38.6	31.7
	43.1	51.4	Medium	33.6	42.5	47.1	48.8	43.4	36.2	33.4
	39.9	48.2	Low	33.5	41.6	43.8	45.6	39.8	33.0	32.7
619ENX0180E0	49.3	57.6	High	40.8	49.1	53.7	55.2	49.1	41.3	32.3
	45.8	54.1	Medium	38.0	46.7	50.6	51.7	44.9	35.8	31.6
	42.5	50.8	Low	37.3	44.4	47.5	48.6	40.4	32.0	31.6
619ENX0240E0	54.2	62.5	High	44.9	51.9	59.1	59.5	54.8	48.0	36.7
	51.7	60.0	Medium	43.7	50.5	57.2	57.0	51.8	44.4	33.6
	49.3	57.6	Low	40.7	47.7	55.1	54.7	49.0	40.5	32.2
619EAX0090W0	42.3	50.6	High	38.2	41.1	46.2	47.9	43.0	33.6	31.2
	40.8	49.1	Medium	31.7	39.8	45.0	45.3	42.0	36.8	36.8
	37.7	46.0	Low	29.2	38.4	43.9	41.9	38.6	28.1	31.2
619ENX0120H0	45.7	54.0	High	35.1	43.8	50.3	51.1	46.4	38.0	31.2
	42.7	51.0	Medium	31.7	43.3	46.3	48.6	42.9	34.2	31.2
	39.6	47.9	Low	29.1	42.2	42.9	45.6	39.1	30.3	31.2
619ENX0180H0	50.3	58.6	High	43.2	49.1	54.0	56.0	50.7	44.0	34.0
	47.8	56.1	Medium	39.8	46.9	52.2	53.7	47.4	40.1	32.7
	44.5	52.8	Low	37.0	44.4	49.3	50.4	43.4	35.6	31.9
619ENX0240H0	53.4	61.7	High	43.8	51.5	58.5	58.8	53.5	46.2	36.0
	50.8	59.1	Medium	41.4	49.5	56.5	56.2	50.4	42.5	36.0
	48.3	56.6	Low	38.9	47.3	54.4	53.7	47.4	39.0	36.0

Note:

1) Sound levels are taken in accordance with ARI Sound Standard 350
2) Sound Pressure data is measured at 1m from the unit.

Legend

ARI - Air Conditioning & Refrigeration Institute
dBa - Decibels on the A scale

Rev "A"
01/11/02

Sound Data "Under Ceiling" Fan Coils (A Weighted)

Model	Sound Pressure (dBa)	Sound Power (dBa)	Fan Speed	Sound Power Data Octave Band (dBa)						
				125	250	500	1000	2000	4000	8000
619CNX0240E0AC	50.1	58.4	High	39.2	50.9	53.4	56.0	50.4	43.1	32.8
	48.9	57.2	Medium	38.1	50.0	52.6	54.7	49.0	41.5	31.8
	46.4	54.7	Low	36.4	47.7	50.7	52.3	46.3	37.4	29.5
619CNX0240E0AC *	48.9	57.2	High	38.1	50.0	52.6	54.7	49.0	41.5	31.8
	46.4	54.7	Medium	36.4	47.7	50.7	52.3	46.3	37.4	29.5
	44.5	52.8	Low	35.1	46.2	49.3	50.5	43.5	34.3	29.0
619CNX0360E0AC	60.1	68.4	High	50.2	61.0	60.5	65.0	61.7	58.9	51.5
	57.7	66.0	Medium	47.9	58.6	58.3	62.8	59.1	56.6	48.1
	54.6	62.9	Low	46.2	55.6	5.2	59.9	56.3	53.6	43.0
619CNX0480E0AC	59.0	67.3	High	48.7	60.8	60.4	64.0	60.3	57.3	47.7
	58.0	66.3	Medium	47.8	59.2	59.4	63.1	59.2	56.2	46.6
			Low	--	--	--	--	--	--	--
619CNX0600E0AA	61.8	70.1	High	52.5	63.6	63.7	67.0	63.3	59.0	50.0
	60.5	68.8	Medium	51.2	61.5	61.9	66.4	60.8	56.6	47.0
	57.5	65.8	Low	49.5	59.1	60.0	63.1	58.3	53.6	43.8
619CNX0240W0AC	51.1	59.4	High	42.8	51.8	54.0	56.7	52.2	45.9	36.6
	50.2	58.5	Medium	41.3	50.8	53.3	55.6	51.3	45.3	35.2
	49.5	57.8	Low	40.9	50.3	52.6	54.7	50.7	45.1	35.8
619CNX0360W0AC	60.1	68.4	High	50.2	61.0	60.5	65.0	61.7	58.9	51.5
	57.8	66.1	Medium	47.9	58.6	58.3	62.8	59.1	56.6	48.1
	54.9	63.2	Low	46.2	55.6	56.2	59.9	56.3	53.6	43.0
619CNX0480W0AC	59.0	67.3	High	48.7	60.8	60.4	64.0	60.3	57.3	47.7
	58.0	66.3	Medium	47.8	59.2	59.4	63.1	59.2	56.2	46.6
			Low	--	--	--	--	--	--	--
619CNX0600W0AA	61.8	70.1	High	52.5	63.6	63.7	67.0	63.3	59.0	50.0
	60.5	68.8	Medium	51.2	61.5	61.9	66.4	60.8	56.6	47.0
	57.5	65.8	Low	49.5	59.1	60.0	63.1	58.3	53.6	43.8

* Field Reconfigured for 18,000 Btuh

Note:

1) Sound levels are taken in accordance with ARI Sound Standard 350
2) Sound Pressure data is measured at 1m from the unit.

Legend

ARI - Air Conditioning & Refrigeration Institute
dBa - Decibels on the A scale

Sound Data "Console" Fan Coils (A Weighted)

Model	Sound Pressure (dBa)	Sound Power (dBa)	Fan Speed	Sound Power Data Octave Band (dBa)						
				125	250	500	1000	2000	4000	8000
40CG-018---301RM	n/a	65.0	High	n/a	n/a	n/a	n/a	n/a	n/a	n/a
	n/a	58.0	Medium	n/a	n/a	n/a	n/a	n/a	n/a	n/a
	38.0	55.0	Low	n/a	n/a	n/a	n/a	n/a	n/a	n/a
40CG-024---301RM	n/a	65.0	High	n/a	n/a	n/a	n/a	n/a	n/a	n/a
	n/a	60.0	Medium	n/a	n/a	n/a	n/a	n/a	n/a	n/a
	40.0	56.0	Low	n/a	n/a	n/a	n/a	n/a	n/a	n/a
40CG-030---301RM	n/a	64.0	High	n/a	n/a	n/a	n/a	n/a	n/a	n/a
	n/a	59.0	Medium	n/a	n/a	n/a	n/a	n/a	n/a	n/a
	40.0	55.0	Low	n/a	n/a	n/a	n/a	n/a	n/a	n/a
40CS-018---301RM	n/a	65.0	High	n/a	n/a	n/a	n/a	n/a	n/a	n/a
	n/a	58.0	Medium	n/a	n/a	n/a	n/a	n/a	n/a	n/a
	38.0	55.0	Low	n/a	n/a	n/a	n/a	n/a	n/a	n/a
40CS-024---301RM	n/a	65.0	High	n/a	n/a	n/a	n/a	n/a	n/a	n/a
	n/a	60.0	Medium	n/a	n/a	n/a	n/a	n/a	n/a	n/a
	40.0	56.0	Low	n/a	n/a	n/a	n/a	n/a	n/a	n/a
40CS-030---301RM	n/a	64.0	High	n/a	n/a	n/a	n/a	n/a	n/a	n/a
	n/a	59.0	Medium	n/a	n/a	n/a	n/a	n/a	n/a	n/a
	40.0	55.0	Low	n/a	n/a	n/a	n/a	n/a	n/a	n/a

Note:

1) Sound levels are taken in accordance with ARI Sound Standard 350
2) Sound Pressure data is measured at 1m from the unit.

Legend

ARI - Air Conditioning & Refrigeration Institute
dBa - Decibels on the A scale

Rev "A"

Sound Data "Cassette" Fan Coils (A Weighted)

Model	Sound Pressure (dBa)	Sound Power (dBa)	Fan Speed	Sound Power Data Octave Band (dBa)						
				125	250	500	1000	2000	4000	8000
619FNX0240E0	48.0	56.3	High	32.1	45.0	51.2	54.1	46.5	45.0	36.5
	42.6	50.9	Medium	42.0	44.1	48.0	47.5	42.2	37.3	36.8
	41.5	49.8	Low	40.9	43.0	46.9	46.4	41.1	36.2	35.7
619FNX0360E0	46.5	54.8	High	45.0	45.8	50.9	51.8	47.4	38.8	32.9
	39.9	48.2	Medium	35.5	40.2	46.1	45.2	39.0	29.9	28.7
	32.6	40.9	Low	31.2	37.8	40.3	37.0	26.5	24.5	27.3
619FNX0240W0	48.0	56.3	High	32.1	45.0	51.2	54.1	46.5	45.0	36.5
			Medium	--	--	--	--	--	--	--
			Low	--	--	--	--	--	--	--
619FNX0360W0	46.5	54.8	High	45.0	45.8	50.9	51.8	47.4	38.8	32.9
	39.9	48.2	Medium	35.5	40.2	46.1	45.2	39.0	29.9	28.7
	32.6	40.9	Low	31.2	37.8	40.3	37.0	26.5	24.5	27.3
619FNX0480W0	50.8	59.1	High	40.2	45.8	54.8	56.0	51.5	47.7	39.8
	45.6	53.9	Medium	45.0	47.1	51.0	50.5	45.2	40.3	39.8
			Low	--	--	--	--	--	--	--

Note:

in accordance with ARI Sound Standard 350

2) Sound Pressure data is measured at 1m from the unit.

Legend

ARI - Air Conditioning & Refrigeration Institute

dBa - Decibels on the A scale

Sound Data "Condensers" (A Weighted)

Model	Sound Power #1(dBa)	Sound Power #2(dBa)	Sound Pessure (dBa)	Fan Speed	Sound Power Data Octave Band (dBa)						
					125	250	500	1000	2000	4000	8000
538CAX009000	62.3	64.0	54.0	High	48.9	54.9	58.3	59.1	54.9	49.1	39.9
538CNX012000	63.1	65.0	54.8	High	49.3	59.1	59.0	60.0	55.2	49.2	44.0
538DAX009000	63.4	65.0	55.1	All	50.3	56.4	57.8	60.8	55.8	49.9	42.9
538DNX012000	62.8	65.0	54.5	All	50.8	56.2	60.7	58.7	54.9	50.1	43.2
538DNX018000	67.2	68.0	58.9	All	51.0	57.0	62.0	62.5	62.0	56.5	47.5
538DNX024000	63.3	68.0	55.0	All	54.5	59.0	61.5	62.0	60.5	54.5	49.5
538ANX018000	66.1	70.0	57.8	High	55.1	55.5	58.4	61.6	61.2	56.0	45.5
538ANX024000	65.5	68.0	57.2	High	48.6	55.8	59.6	61.8	59.3	55.1	44.2
538ANX030000	63.0	68.0	54.7	High	67.5	58.0	59.0	60.5	51.5	48.0	40.5
538ANX,APX,AEX036000	64.5	68.0	56.2	High	47.3	55.3	59.2	61.3	57.9	52.3	44.9
538ANX,APX,AEX048000	70.1	72.0	61.8	High	58.5	63.2	64.3	65.3	64.2	61.3	50.7
538ANX,APX,AEX060000	69.4	72.0	61.1	High	54.9	59.8	63.6	64.5	63.9	60.1	50.3
538JNX018000	59.5		51.2	Single	48.9	51.4	53.3	56.5	52.7	47.0	36.4
538JNX024000	63.2	68.0	54.9	Single	48.9	48.9	63.8	58.0	52.2	46.0	41.9
538JNX030000	59.5	64.0	51.2	Single	46.4	49.9	53.8	57.5	50.7	44.5	36.9
538JNX036000	64.6	70.0	62.2	Single	61.8	60.3	64.5	62.9	61.7	54.4	43.7
538JNX048000	65.4	72.0	57.1	Single	61.9	57.4	59.8	61.5	59.2	54.5	44.4
538JNX060000	65.8	71.0	57.5	Single	60.9	55.9	60.3	61.5	59.2	57.0	47.9
538SNX024000	65.5	68.0	57.2	High	48.6	55.8	59.6	61.8	59.3	55.1	44.2
538SNX048000	70.1	72.0	61.8	High	58.5	63.2	64.3	65.3	64.2	61.3	50.7
538BNX018000	67.2	68.0	58.9	High	51.0	57.0	62.0	62.5	62.0	56.5	47.5
538BNX024000	66.3	68.0	58.0	High	54.5	59.0	61.5	62.0	60.5	54.5	49.5
538BNX030000	65.9	68.0	57.6	High	55.0	56.5	61.0	63.0	58.5	53.5	43.0
538BNX036000	66.2	68.0	57.9	All	57.0	61.0	61.0	62.5	59.0	55.5	51.0
538BPX,BEX036000 *	71.5	74.0	63.2	All	67.0	66.0	67.0	67.0	64.5	62.5	52.0
538BNX,BPX,BEX048000	73.0	76.0	64.7	All	60.5	68.5	68.0	68.5	67.0	62.5	54.0
538BNX,BPX,BEX060000	73.6	72.0	65.3	All	62.5	67.5	71.0	68.0	67.0	63.5	54.5
38CG-018---3	79.0	n/a	49.0	Low	n/a	n/a	n/a	n/a	n/a	n/a	n/a
38CG-024---3	74.0	n/a	49.0	Low	n/a	n/a	n/a	n/a	n/a	n/a	n/a
38CG-030---3	78.0	n/a	49.0	Low	n/a	n/a	n/a	n/a	n/a	n/a	n/a
38CS-018---3	79.0	n/a	49.0	Low	n/a	n/a	n/a	n/a	n/a	n/a	n/a
38CS-024---3	74.0	n/a	49.0	Low	n/a	n/a	n/a	n/a	n/a	n/a	n/a
38CS-030---3	78.0	n/a	49.0	Low	n/a	n/a	n/a	n/a	n/a	n/a	n/a
38SC-030---3	80.0	n/a	51.0	Low	n/a	n/a	n/a	n/a	n/a	n/a	n/a
38SB-030---3	80.0	n/a	51.0	Low	n/a	n/a	n/a	n/a	n/a	n/a	n/a

* 3 Phase Unit

Note:

1) Sound #2 levels are tone corrected values taken in accordance with ARI Sound Standard 270
2) Sound Pressure data is measured at 1m from the unit.

Legend

ARI - Air Conditioning & Refrigeration Institute
dBa - Decibels on the A scale
n/a - Not available at this time

Rev "A"
01/11/02

System Cross Match

Cooling Only High Wall

Nominal Capacity	Indoor Unit Carrier	Indoor Unit Bryant	Outdoor Unit Carrier	Outdoor Unit Bryant
9,000	40QNB009-1	619EAX0090E0	38AN-009-1	538CAX009000
12,000	40QNB012-1	619EAX0120E0	38AN-012-1	538CAX012000
12,000	40QNB012-3	619ENX0120E0	38AN-012-3	538CNX012000
18,000	40QNB018-3	619ENX0180E0	38HDC018-3	538ANX018000
24,000	40QNB024-3	619ENX0240E0	38HDC024-3	538ANX024000
			38HDL024-3	538JNX024000

Heat Pump High Wall

Nominal Capacity	Indoor Unit Carrier	Indoor Unit Bryant	Outdoor Unit Carrier	Outdoor Unit Bryant
9,000	40QNE009-1	619EAX0090W0	38BK-009-1	538DAX009000
12,000	40QNH012-3	619ENX0120H0	38BK-012-3	538DNX012000
18,000	40QNH018-3	619ENX0180H0	38BK-018-3	538DNX018000
24,000	40QNH024-3	619ENX0240H0	38BK-024-3	538DNX024000

Cooling Only Under Ceiling

Nominal Capacity	Indoor Unit Carrier	Indoor Unit Bryant	Outdoor Unit Carrier	Outdoor Unit Bryant
18,000	40QAB024-331	619CNX0240E0AC	38HDC018-3	538ANX018000
			38HDL018-3	538JNX018000
24,000	40QAB024-331	619CNX0240E0AC	38HDC024-3	538ANX024000
			38HDL024-3	538JNX024000
30,000	40QAB036-321	619CNX0360E0AC	38HDC030-3	538ANX030000
			38HDL030-3	538JNX030000
36,000	40QAB036-321	619CNX0360E0AC	38HDC036-3,5,6	538ANX,APX,AEX,036000
			38HDL036-3	538JNX036000
48,000	40QAB048-321	619CNX0480E0AC	38HDC048-3,5,6	538ANX,APX,AEX,048000
			38HDL048-3	538JNX048000
60,000	40QAB060-321	619CNX0600E0AA	38HDC060-3,5,6	538ANX,APX,AEX,060000
			38HDL060-3	538JNX060000

Heat Pump Under Ceiling

Nominal Capacity	Indoor Unit Carrier	Indoor Unit Bryant	Outdoor Unit Carrier	Outdoor Unit Bryant
18,000	40QAE024-331	619CNX0240W0AC	38QR-018C-3	538BNX018000
24,000			38QR-024C-3	538BNX024000
30,000	40QAE036-321	619CNX0360W0AC	38QR-030C-3	538BNX030000
36,000			38QR-036C-3	538BNX036000
36,000			38QR-036C-5,6	538BPX,BEX,036000
48,000	40QAE048-321	619CNX0480W0AC	38QR-048C-3,5,6	538BNX,BPX,BEX,048000
60,000	40QAE060-321	619CNX0600W0AA	38QR-060C-3,5,6	538BNX,BPX,BEX,060000

Cooling Only Cassette

Nominal Capacity	Indoor Unit Carrier	Indoor Unit Bryant	Outdoor Unit Carrier	Outdoor Unit Bryant
18,000	40QKB024-3	619FNX0240E0	38HDC018-3	538ANX018000
			38HDL018-3	538JNX018000
	40QKB036-3	619FNX0360E0	38HDC024-3	538ANX024000
24,000			38HDL024-3	538JNX024000
30,000			38HDC030-3	538ANX030000
36,000			38HDL030-3	538JNX030000
			38HDC036-3,5,6	538ANX,APX,AEX,036000
			38HDL036-3	538JNX036000

Heat Pump Cassette

Nominal Capacity	Indoor Unit Carrier	Indoor Unit Bryant	Outdoor Unit Carrier	Outdoor Unit Bryant
18,000	40QKE024-3	619FNX0240W0	38QR-018C-3	538BNX018000
2,400	40QKE036-3	619FNX0360W0	38QR-024C-3	538BNX024000
30,000			38QR-030C-3	538BNX030000
36,000	40QKE048-3	619FNX0480W0	38QR-036C-3	538BNX036000
			38QR-036C-5,6	538BPX,BEX036000

Cooling Only Console

Nominal Capacity	Indoor Unit Carrier	Indoor Unit Bryant	Outdoor Unit Carrier	Outdoor Unit Bryant
1.5	40CG-018---301RM	40CG-018---301RM	38CG-018---301	38CG-018---301
2.0	40CG-024---301RM	40CG-024---301RM	38CG-024---301	38CG-024---301
2.5	40CG-030---301RM	40CG-030---301RM	38CG-030---301	38CG-030---301

Heat Pump Console

Nominal Capacity	Indoor Unit Carrier	Indoor Unit Bryant	Outdoor Unit Carrier	Outdoor Unit Bryant
1.5	40CS-018---301RM	40CS-018---301RM	38CS-018---301	38CS-018---301
2.0	40CS-024---301RM	40CS-024---301RM	38CS-024---301	38CS-024---301
2.5	40CS-030---301RM	40CS-030---301RM	38CS-030---301	38CS-030---301

Cooling Only Console - Multi-Split

Nominal Capacity	Indoor Unit Carrier	Indoor Unit Bryant	Outdoor Unit Carrier	Outdoor Unit Bryant
2.5	40CG-030---301RM	40CG-030---301RM	38SC-030---301	38SC-030---301

Heat Pump Console - Multi-Split

Nominal Capacity	Indoor Unit Carrier	Indoor Unit Bryant	Outdoor Unit Carrier	Outdoor Unit Bryant
2.5	40CS-030---301RM	40CS-030---301RM	38SB-030-301	38SB-030-301

System Cross Match

Cooling Only High Wall

Nominal Capacity	Indoor Unit Carrier	Indoor Unit Bryant	Outdoor Unit Carrier	Outdoor Unit Bryant
9,000	40QNB009-1	619EAX0090E0	38AN-009-1	538CAX009000
12,000	40QNB012-1	619EAX0120E0	38AN-012-1	538CAX012000
12,000	40QNB012-3	619ENX0120E0	38AN-012-3	538CNX012000
18,000	40QNB018-3	619ENX0180E0	38HDC018-3	538ANX018000
24,000	40QNB024-3	619ENX0240E0	38HDC024-3	538ANX024000
			38HDL024-3	538JNX024000

Heat Pump High Wall

Nominal Capacity	Indoor Unit Carrier	Indoor Unit Bryant	Outdoor Unit Carrier	Outdoor Unit Bryant
9,000	40QNE009-1	619EAX0090W0	38BK-009-1	538DAX009000
12,000	40QNH012-3	619ENX0120H0	38BK-012-3	538DNX012000
18,000	40QNH018-3	619ENX0180H0	38BK-018-3	538DNX018000
24,000	40QNH024-3	619ENX0240H0	38BK-024-3	538DNX024000

Cooling Only Under Ceiling

Nominal Capacity	Indoor Unit Carrier	Indoor Unit Bryant	Outdoor Unit Carrier	Outdoor Unit Bryant
18,000	40QAB024-331	619CNX0240E0AC	38HDC018-3	538ANX018000
			38HDL018-3	538JNX018000
24,000	40QAB024-331	619CNX0240E0AC	38HDC024-3	538ANX024000
			38HDL024-3	538JNX024000
30,000	40QAB036-321	619CNX0360E0AC	38HDC030-3	538ANX030000
			38HDL030-3	538JNX030000
36,000	40QAB036-321	619CNX0360E0AC	38HDC036-3,5,6	538ANX,APX,AEX,036000
			38HDL036-3	538JNX036000
48,000	40QAB048-321	619CNX0480E0AC	38HDC048-3,5,6	538ANX,APX,AEX,048000
			38HDL048-3	538JNX048000
60,000	40QAB060-321	619CNX0600E0AA	38HDC060-3,5,6	538ANX,APX,AEX,060000
			38HDL060-3	538JNX060000

Heat Pump Under Ceiling

Nominal Capacity	Indoor Unit Carrier	Indoor Unit Bryant	Outdoor Unit Carrier	Outdoor Unit Bryant
18,000	40QAE024-331	619CNX0240W0AC	38QR-018C-3	538BNX018000
24,000			38QR-024C-3	538BNX024000
30,000	40QAE036-321	619CNX0360W0AC	38QR-030C-3	538BNX030000
36,000			38QR-036C-3	538BNX036000
36,000			38QR-036C-5,6	538BPX,BEX,036000
48,000	40QAE048-321	619CNX0480W0AC	38QR-048C-3,5,6	538BNX,BPX,BEX,048000
60,000	40QAE060-321	619CNX0600W0AA	38QR-060C-3,5,6	538BNX,BPX,BEX,060000

Cooling Only Cassette

Nominal Capacity	Indoor Unit Carrier	Indoor Unit Bryant	Outdoor Unit Carrier	Outdoor Unit Bryant
18,000	40QKB024-3	619FNX0240E0	38HDC018-3	538ANX018000
			38HDL018-3	538JNX018000
	40QKB036-3	619FNX0360E0	38HDC024-3	538ANX024000
24,000			38HDL024-3	538JNX024000
30,000			38HDC030-3	538ANX030000
36,000			38HDL030-3	538JNX030000
			38HDC036-3,5,6	538ANX,APX,AEX,036000
			38HDL036-3	538JNX036000

Heat Pump Cassette

Nominal Capacity	Indoor Unit Carrier	Indoor Unit Bryant	Outdoor Unit Carrier	Outdoor Unit Bryant
18,000	40QKE024-3	619FNX0240W0	38QR-018C-3	538BNX018000
2,400	40QKE036-3	619FNX0360W0	38QR-024C-3	538BNX024000
30,000			38QR-030C-3	538BNX030000
36,000	40QKE048-3	619FNX0480W0	38QR-036C-3	538BNX036000
			38QR-036C-5,6	538BPX,BEX036000

Cooling Only Console

Nominal Capacity	Indoor Unit Carrier	Indoor Unit Bryant	Outdoor Unit Carrier	Outdoor Unit Bryant
1.5	40CG-018---301RM	40CG-018---301RM	38CG-018---301	38CG-018---301
2.0	40CG-024---301RM	40CG-024---301RM	38CG-024---301	38CG-024---301
2.5	40CG-030---301RM	40CG-030---301RM	38CG-030---301	38CG-030---301

Heat Pump Console

Nominal Capacity	Indoor Unit Carrier	Indoor Unit Bryant	Outdoor Unit Carrier	Outdoor Unit Bryant
1.5	40CS-018---301RM	40CS-018---301RM	38CS-018---301	38CS-018---301
2.0	40CS-024---301RM	40CS-024---301RM	38CS-024---301	38CS-024---301
2.5	40CS-030---301RM	40CS-030---301RM	38CS-030---301	38CS-030---301

Cooling Only Console - Multi-Split

Nominal Capacity	Indoor Unit Carrier	Indoor Unit Bryant	Outdoor Unit Carrier	Outdoor Unit Bryant
2.5	40CG-030---301RM	40CG-030---301RM	38SC-030---301	38SC-030---301

Heat Pump Console - Multi-Split

Nominal Capacity	Indoor Unit Carrier	Indoor Unit Bryant	Outdoor Unit Carrier	Outdoor Unit Bryant
2.5	40CS-030---301RM	40CS-030---301RM	38SB-030-301	38SB-030-301

System Cross Match

Cooling Only High Wall

Nominal Capacity	Indoor Unit Carrier	Indoor Unit Bryant	Outdoor Unit Carrier	Outdoor Unit Bryant
9,000	40QNB009-1	619EAX0090E0	38AN-009-1	538CAX009000
12,000	40QNB012-1	619EAX0120E0	38AN-012-1	538CAX012000
12,000	40QNB012-3	619ENX0120E0	38AN-012-3	538CNX012000
18,000	40QNB018-3	619ENX0180E0	38HDC018-3	538ANX018000
24,000	40QNB024-3	619ENX0240E0	38HDC024-3	538ANX024000
			38HDL024-3	538JNX024000

Heat Pump High Wall

Nominal Capacity	Indoor Unit Carrier	Indoor Unit Bryant	Outdoor Unit Carrier	Outdoor Unit Bryant
9,000	40QNE009-1	619EAX0090W0	38BK-009-1	538DAX009000
12,000	40QNH012-3	619ENX0120H0	38BK-012-3	538DNX012000
18,000	40QNH018-3	619ENX0180H0	38BK-018-3	538DNX018000
24,000	40QNH024-3	619ENX0240H0	38BK-024-3	538DNX024000

Cooling Only Under Ceiling

Nominal Capacity	Indoor Unit Carrier	Indoor Unit Bryant	Outdoor Unit Carrier	Outdoor Unit Bryant
18,000	40QAB024-331	619CNX0240E0AC	38HDC018-3	538ANX018000
			38HDL018-3	538JNX018000
24,000	40QAB024-331	619CNX0240E0AC	38HDC024-3	538ANX024000
			38HDL024-3	538JNX024000
30,000	40QAB036-321	619CNX0360E0AC	38HDC030-3	538ANX030000
			38HDL030-3	538JNX030000
36,000	40QAB036-321	619CNX0360E0AC	38HDC036-3,5,6	538ANX,APX,AEX,036000
			38HDL036-3	538JNX036000
48,000	40QAB048-321	619CNX0480E0AC	38HDC048-3,5,6	538ANX,APX,AEX,048000
			38HDL048-3	538JNX048000
60,000	40QAB060-321	619CNX0600E0AA	38HDC060-3,5,6	538ANX,APX,AEX,060000
			38HDL060-3	538JNX060000

Heat Pump Under Ceiling

Nominal Capacity	Indoor Unit Carrier	Indoor Unit Bryant	Outdoor Unit Carrier	Outdoor Unit Bryant
18,000	40QAE024-331	619CNX0240W0AC	38QR-018C-3	538BNX018000
24,000			38QR-024C-3	538BNX024000
30,000	40QAE036-321	619CNX0360W0AC	38QR-030C-3	538BNX030000
36,000			38QR-036C-3	538BNX036000
36,000			38QR-036C-5,6	538BPX,BEX,036000
48,000	40QAE048-321	619CNX0480W0AC	38QR-048C-3,5,6	538BNX,BPX,BEX,048000
60,000	40QAE060-321	619CNX0600W0AA	38QR-060C-3,5,6	538BNX,BPX,BEX,060000

Cooling Only Cassette

Nominal Capacity	Indoor Unit Carrier	Indoor Unit Bryant	Outdoor Unit Carrier	Outdoor Unit Bryant
18,000	40QKB024-3	619FNX0240E0	38HDC018-3	538ANX018000
			38HDL018-3	538JNX018000
	40QKB036-3	619FNX0360E0	38HDC024-3	538ANX024000
24,000			38HDL024-3	538JNX024000
30,000			38HDC030-3	538ANX030000
36,000			38HDL030-3	538JNX030000
			38HDC036-3,5,6	538ANX,APX,AEX,036000
			38HDL036-3	538JNX036000

Heat Pump Cassette

Nominal Capacity	Indoor Unit Carrier	Indoor Unit Bryant	Outdoor Unit Carrier	Outdoor Unit Bryant
18,000	40QKE024-3	619FNX0240W0	38QR-018C-3	538BNX018000
2,400	40QKE036-3	619FNX0360W0	38QR-024C-3	538BNX024000
30,000			38QR-030C-3	538BNX030000
36,000	40QKE048-3	619FNX0480W0	38QR-036C-3	538BNX036000
			38QR-036C-5,6	538BPX,BEX036000

Cooling Only Console

Nominal Capacity	Indoor Unit Carrier	Indoor Unit Bryant	Outdoor Unit Carrier	Outdoor Unit Bryant
1.5	40CG-018---301RM	40CG-018---301RM	38CG-018---301	38CG-018---301
2.0	40CG-024---301RM	40CG-024---301RM	38CG-024---301	38CG-024---301
2.5	40CG-030---301RM	40CG-030---301RM	38CG-030---301	38CG-030---301

Heat Pump Console

Nominal Capacity	Indoor Unit Carrier	Indoor Unit Bryant	Outdoor Unit Carrier	Outdoor Unit Bryant
1.5	40CS-018---301RM	40CS-018---301RM	38CS-018---301	38CS-018---301
2.0	40CS-024---301RM	40CS-024---301RM	38CS-024---301	38CS-024---301
2.5	40CS-030---301RM	40CS-030---301RM	38CS-030---301	38CS-030---301

Cooling Only Console - Multi-Split

Nominal Capacity	Indoor Unit Carrier	Indoor Unit Bryant	Outdoor Unit Carrier	Outdoor Unit Bryant
2.5	40CG-030---301RM	40CG-030---301RM	38SC-030---301	38SC-030---301

Heat Pump Console - Multi-Split

Nominal Capacity	Indoor Unit Carrier	Indoor Unit Bryant	Outdoor Unit Carrier	Outdoor Unit Bryant
2.5	40CS-030---301RM	40CS-030---301RM	38SB-030-301	38SB-030-301

System Cross Match

Cooling Only High Wall

Nominal Capacity	Indoor Unit Carrier	Indoor Unit Bryant	Outdoor Unit Carrier	Outdoor Unit Bryant
9,000	40QNB009-1	619EAX0090E0	38AN-009-1	538CAX009000
12,000	40QNB012-1	619EAX0120E0	38AN-012-1	538CAX012000
12,000	40QNB012-3	619ENX0120E0	38AN-012-3	538CNX012000
18,000	40QNB018-3	619ENX0180E0	38HDC018-3	538ANX018000
24,000	40QNB024-3	619ENX0240E0	38HDC024-3	538ANX024000
			38HDL024-3	538JNX024000

Heat Pump High Wall

Nominal Capacity	Indoor Unit Carrier	Indoor Unit Bryant	Outdoor Unit Carrier	Outdoor Unit Bryant
9,000	40QNE009-1	619EAX0090W0	38BK-009-1	538DAX009000
12,000	40QNH012-3	619ENX0120H0	38BK-012-3	538DNX012000
18,000	40QNH018-3	619ENX0180H0	38BK-018-3	538DNX018000
24,000	40QNH024-3	619ENX0240H0	38BK-024-3	538DNX024000

Cooling Only Under Ceiling

Nominal Capacity	Indoor Unit Carrier	Indoor Unit Bryant	Outdoor Unit Carrier	Outdoor Unit Bryant
18,000	40QAB024-331	619CNX0240E0AC	38HDC018-3	538ANX018000
			38HDL018-3	538JNX018000
24,000	40QAB024-331	619CNX0240E0AC	38HDC024-3	538ANX024000
			38HDL024-3	538JNX024000
30,000	40QAB036-321	619CNX0360E0AC	38HDC030-3	538ANX030000
			38HDL030-3	538JNX030000
36,000	40QAB036-321	619CNX0360E0AC	38HDC036-3,5,6	538ANX,APX,AEX,036000
			38HDL036-3	538JNX036000
48,000	40QAB048-321	619CNX0480E0AC	38HDC048-3,5,6	538ANX,APX,AEX,048000
			38HDL048-3	538JNX048000
60,000	40QAB060-321	619CNX0600E0AA	38HDC060-3,5,6	538ANX,APX,AEX,060000
			38HDL060-3	538JNX060000

Heat Pump Under Ceiling

Nominal Capacity	Indoor Unit Carrier	Indoor Unit Bryant	Outdoor Unit Carrier	Outdoor Unit Bryant
18,000	40QAE024-331	619CNX0240W0AC	38QR-018C-3	538BNX018000
24,000			38QR-024C-3	538BNX024000
30,000	40QAE036-321	619CNX0360W0AC	38QR-030C-3	538BNX030000
36,000			38QR-036C-3	538BNX036000
36,000			38QR-036C-5,6	538BPX,BEX,036000
48,000	40QAE048-321	619CNX0480W0AC	38QR-048C-3,5,6	538BNX,BPX,BEX,048000
60,000	40QAE060-321	619CNX0600W0AA	38QR-060C-3,5,6	538BNX,BPX,BEX,060000

Cooling Only Cassette

Nominal Capacity	Indoor Unit Carrier	Indoor Unit Bryant	Outdoor Unit Carrier	Outdoor Unit Bryant
18,000	40QKB024-3	619FNX0240E0	38HDC018-3	538ANX018000
			38HDL018-3	538JNX018000
	40QKB036-3	619FNX0360E0	38HDC024-3	538ANX024000
24,000			38HDL024-3	538JNX024000
30,000			38HDC030-3	538ANX030000
36,000			38HDL030-3	538JNX030000
			38HDC036-3,5,6	538ANX,APX,AEX,036000
			38HDL036-3	538JNX036000

Heat Pump Cassette

Nominal Capacity	Indoor Unit Carrier	Indoor Unit Bryant	Outdoor Unit Carrier	Outdoor Unit Bryant
18,000	40QKE024-3	619FNX0240W0	38QR-018C-3	538BNX018000
2,400	40QKE036-3	619FNX0360W0	38QR-024C-3	538BNX024000
30,000			38QR-030C-3	538BNX030000
36,000	40QKE048-3	619FNX0480W0	38QR-036C-3	538BNX036000
			38QR-036C-5,6	538BPX,BEX036000

Cooling Only Console

Nominal Capacity	Indoor Unit Carrier	Indoor Unit Bryant	Outdoor Unit Carrier	Outdoor Unit Bryant
1.5	40CG-018---301RM	40CG-018---301RM	38CG-018---301	38CG-018---301
2.0	40CG-024---301RM	40CG-024---301RM	38CG-024---301	38CG-024---301
2.5	40CG-030---301RM	40CG-030---301RM	38CG-030---301	38CG-030---301

Heat Pump Console

Nominal Capacity	Indoor Unit Carrier	Indoor Unit Bryant	Outdoor Unit Carrier	Outdoor Unit Bryant
1.5	40CS-018---301RM	40CS-018---301RM	38CS-018---301	38CS-018---301
2.0	40CS-024---301RM	40CS-024---301RM	38CS-024---301	38CS-024---301
2.5	40CS-030---301RM	40CS-030---301RM	38CS-030---301	38CS-030---301

Cooling Only Console - Multi-Split

Nominal Capacity	Indoor Unit Carrier	Indoor Unit Bryant	Outdoor Unit Carrier	Outdoor Unit Bryant
2.5	40CG-030---301RM	40CG-030---301RM	38SC-030---301	38SC-030---301

Heat Pump Console - Multi-Split

Nominal Capacity	Indoor Unit Carrier	Indoor Unit Bryant	Outdoor Unit Carrier	Outdoor Unit Bryant
2.5	40CS-030---301RM	40CS-030---301RM	38SB-030-301	38SB-030-301

System Cross Match

Cooling Only High Wall

Nominal Capacity	Indoor Unit Carrier	Indoor Unit Bryant	Outdoor Unit Carrier	Outdoor Unit Bryant
9,000	40QNB009-1	619EAX0090E0	38AN-009-1	538CAX009000
12,000	40QNB012-1	619EAX0120E0	38AN-012-1	538CAX012000
12,000	40QNB012-3	619ENX0120E0	38AN-012-3	538CNX012000
18,000	40QNB018-3	619ENX0180E0	38HDC018-3	538ANX018000
24,000	40QNB024-3	619ENX0240E0	38HDC024-3	538ANX024000
			38HDL024-3	538JNX024000

Heat Pump High Wall

Nominal Capacity	Indoor Unit Carrier	Indoor Unit Bryant	Outdoor Unit Carrier	Outdoor Unit Bryant
9,000	40QNE009-1	619EAX0090W0	38BK-009-1	538DAX009000
12,000	40QNH012-3	619ENX0120H0	38BK-012-3	538DNX012000
18,000	40QNH018-3	619ENX0180H0	38BK-018-3	538DNX018000
24,000	40QNH024-3	619ENX0240H0	38BK-024-3	538DNX024000

Cooling Only Under Ceiling

Nominal Capacity	Indoor Unit Carrier	Indoor Unit Bryant	Outdoor Unit Carrier	Outdoor Unit Bryant
18,000	40QAB024-331	619CNX0240E0AC	38HDC018-3	538ANX018000
			38HDL018-3	538JNX018000
24,000	40QAB024-331	619CNX0240E0AC	38HDC024-3	538ANX024000
			38HDL024-3	538JNX024000
30,000	40QAB036-321	619CNX0360E0AC	38HDC030-3	538ANX030000
			38HDL030-3	538JNX030000
36,000	40QAB036-321	619CNX0360E0AC	38HDC036-3,5,6	538ANX,APX,AEX,036000
			38HDL036-3	538JNX036000
48,000	40QAB048-321	619CNX0480E0AC	38HDC048-3,5,6	538ANX,APX,AEX,048000
			38HDL048-3	538JNX048000
60,000	40QAB060-321	619CNX0600E0AA	38HDC060-3,5,6	538ANX,APX,AEX,060000
			38HDL060-3	538JNX060000

Heat Pump Under Ceiling

Nominal Capacity	Indoor Unit Carrier	Indoor Unit Bryant	Outdoor Unit Carrier	Outdoor Unit Bryant
18,000	40QAE024-331	619CNX0240W0AC	38QR-018C-3	538BNX018000
24,000			38QR-024C-3	538BNX024000
30,000	40QAE036-321	619CNX0360W0AC	38QR-030C-3	538BNX030000
36,000			38QR-036C-3	538BNX036000
36,000			38QR-036C-5,6	538BPX,BEX,036000
48,000	40QAE048-321	619CNX0480W0AC	38QR-048C-3,5,6	538BNX,BPX,BEX,048000
60,000	40QAE060-321	619CNX0600W0AA	38QR-060C-3,5,6	538BNX,BPX,BEX,060000

Cooling Only Cassette

Nominal Capacity	Indoor Unit Carrier	Indoor Unit Bryant	Outdoor Unit Carrier	Outdoor Unit Bryant
18,000	40QKB024-3	619FNX0240E0	38HDC018-3	538ANX018000
			38HDL018-3	538JNX018000
	40QKB036-3	619FNX0360E0	38HDC024-3	538ANX024000
24,000			38HDL024-3	538JNX024000
30,000			38HDC030-3	538ANX030000
36,000			38HDL030-3	538JNX030000
			38HDC036-3,5,6	538ANX,APX,AEX,036000
			38HDL036-3	538JNX036000

Heat Pump Cassette

Nominal Capacity	Indoor Unit Carrier	Indoor Unit Bryant	Outdoor Unit Carrier	Outdoor Unit Bryant
18,000	40QKE024-3	619FNX0240W0	38QR-018C-3	538BNX018000
2,400	40QKE036-3	619FNX0360W0	38QR-024C-3	538BNX024000
30,000			38QR-030C-3	538BNX030000
36,000	40QKE048-3	619FNX0480W0	38QR-036C-3	538BNX036000
			38QR-036C-5,6	538BPX,BEX036000

Cooling Only Console

Nominal Capacity	Indoor Unit Carrier	Indoor Unit Bryant	Outdoor Unit Carrier	Outdoor Unit Bryant
1.5	40CG-018---301RM	40CG-018---301RM	38CG-018---301	38CG-018---301
2.0	40CG-024---301RM	40CG-024---301RM	38CG-024---301	38CG-024---301
2.5	40CG-030---301RM	40CG-030---301RM	38CG-030---301	38CG-030---301

Heat Pump Console

Nominal Capacity	Indoor Unit Carrier	Indoor Unit Bryant	Outdoor Unit Carrier	Outdoor Unit Bryant
1.5	40CS-018---301RM	40CS-018---301RM	38CS-018---301	38CS-018---301
2.0	40CS-024---301RM	40CS-024---301RM	38CS-024---301	38CS-024---301
2.5	40CS-030---301RM	40CS-030---301RM	38CS-030---301	38CS-030---301

Cooling Only Console - Multi-Split

Nominal Capacity	Indoor Unit Carrier	Indoor Unit Bryant	Outdoor Unit Carrier	Outdoor Unit Bryant
2.5	40CG-030---301RM	40CG-030---301RM	38SC-030---301	38SC-030---301

Heat Pump Console - Multi-Split

Nominal Capacity	Indoor Unit Carrier	Indoor Unit Bryant	Outdoor Unit Carrier	Outdoor Unit Bryant
2.5	40CS-030---301RM	40CS-030---301RM	38SB-030-301	38SB-030-301

Product

System & Unit Specifications – Section 11

Cooling Only System Specifications

Heat Pump System Specifications

Unit Specifications

Cooling Only System Specifications

High Wall

Nominal Capacity Tons	Indoor Unit	Outdoor Unit	ARI Capacity Btuh	ARI CFM	SEER	EER	Sound Rating (dBa)			
							Indoor Power	Indoor Pressure	Outdoor Power	Outdoor Pressure
0.75	619EAX0090E0	538CAX009000	8,500	215	10.5	9.7	50.4	42.1	62.3	54
1.0	619EAX0120E0	538CAX012000	11,000	300	10.5	9.3	54.0	45.7	63.1	54.8
	619ENX0120E0	538CNX012000	11,600	302	11.0	10.1	54.0	45.7	63.1	54.8
1.5	619ENX0180E0	538ANX018000	17,300	480	11.3	10.4	57.6	49.3	66.1	57.8
		538JNX018000	16,200	480	11.0	9.7	57.6	49.3	59.5	51.2
2.0	619ENX0240E0	538JNX018000	17,600	550	11.7	10.4	62.5	54.2	59.2	51.2
		538ANX024000	22,600	550	12.0	10.8	- -	- -	65.5	57.2
		538JNX024000	22,600	550	11.3	11.3	- -	- -	63.2	54.9

Under Ceiling

Nominal Capacity Tons	Indoor Unit	Outdoor Unit	ARI Capacity Btuh	ARI CFM	SEER	EER	Sound Rating (dBa)			
							Indoor Power	Indoor Pressure	Outdoor Power	Outdoor Pressure
1.5	619CNX0240E0AC	538ANX018000	18,000	500	12.0	11.0	57.2	48.9	66.1	57.8
		538JNX018000	18,000	500	11.6	10.5	- -	- -	59.5	51.2
2.0	619CNX0240E0AC	538ANX024000	22,800	600	12.0	11.0	58.4	50.1	65.5	57.2
		538JNX024000	23,000	600	11.0	11.2	- -	- -	63.2	54.9
2.5	619CNX0360E0AC	538ANX030000	30,000	840	12.0	11.0	68.4	60.1	63.0	54.7
		538JNX030000	29,000	840	10.3	9.7	- -	- -	59.5	51.2
3.0	619CNX0360E0AC	538ANX,APX,AEX,036000	34,000	840	12.0	10.5	68.4	60.1	64.5	56.2
		538JNX036000	34,000	840	10.1	9.6	- -	- -	64.7	56.4
4.0	619CNX0480E0AC	538ANX,APX,AEX,048000	47,000	1,200	12.0	10.8	67.3	59	70.1	61.8
		538JNX048000	45,500	1,200	10.8	9.9	- -	- -	65.4	57.1
5.0	619CNX0600E0AC	538ANX,APX,AEX,060000	58,000	1,600	12.0	11.2	70.1	61.8	69.4	61.1
		538JNX060000	58,500	1,600	10.8	9.5	- -	- -	65.8	57.5

Cassette

Nominal Capacity Tons	Indoor Unit	Outdoor Unit	ARI Capacity Btuh	ARI CFM	SEER	EER	Sound Rating (dBa)			
							Indoor Power	Indoor Pressure	Outdoor Power	Outdoor Pressure
1.5	619FNX0240E0	538ANX018000	18,300	525	11.0	10.4	56.3	48	66.1	57.8
		538JNX018000	17,800	525	11.4	10.6	- -	- -	59.5	51.2
	619FNX0360E0	538ANX024000	24,000	915	11.0	10.9	54.8	46.5	65.5	57.2
2.0		538JNX024000	24,000	915	11.8	11.3	- -	- -	63.2	54.9
2.5		538ANX030000	30,000	915	10.8	9.6	- -	- -	63.0	54.7
3.0		538JNX030000	29,000	915	11.1	10.1	- -	- -	59.5	51.2
		538ANX,APX,AEX,036000	33,000	915	10.8	10.5	- -	- -	64.5	56.2
		538JNX036000	34,400	915	10.5	9.7	- -	- -	64.7	56.4

Console

Nominal Capacity Tons	Indoor Unit	Outdoor Unit	ARI Capacity Btuh	ARI CFM	SEER	EER	Sound Rating (dBa)			
							Indoor Power	Indoor Pressure	Outdoor Power	Outdoor Pressure
1.5	40CG-018---3	38CG-018---3	18,000	650	10	9.0	55.0	38.0	79.0	49.0
2	40CG-024---3	38CG-024---3	23,400	800	10	9.1	56.0	40.0	74.0	49.0
2.5	40CG-030---3	38CG-030---3	30,000	800	10	9.0	55.0	40.0	78.0	49.0

Console Multi Split

Nominal Capacity Tons	Indoor Unit	Outdoor Unit	ARI Capacity Btuh	ARI CFM	SEER	EER	Sound Rating (dBa)			
							Indoor Power	Indoor Pressure	Outdoor Power	Outdoor Pressure
2.5	40CG-030---3	38SC-030---3	30,000	800	10	9.0	55.0	40.0	80.0	49.0

CFM - Cubic Feet Per Minute
SEER - Seasonal Energy Efficiency Rating

01/04/02

Cooling Only System Specifications

High Wall

Nominal Capacity Tons	Indoor Unit	Outdoor Unit	ARI Capacity Btuh	ARI CFM	SEER	EER	Sound Rating (dBa)			
							Indoor Power	Indoor Pressure	Outdoor Power	Outdoor Pressure
0.75	619EAX0090E0	538CAX009000	8,500	215	10.5	9.7	50.4	42.1	62.3	54
1.0	619EAX0120E0	538CAX012000	11,000	300	10.5	9.3	54.0	45.7	63.1	54.8
	619ENX0120E0	538CNX012000	11,600	302	11.0	10.1	54.0	45.7	63.1	54.8
1.5	619ENX0180E0	538ANX018000	17,300	480	11.3	10.4	57.6	49.3	66.1	57.8
		538JNX018000	16,200	480	11.0	9.7	57.6	49.3	59.5	51.2
2.0	619ENX0240E0	538JNX018000	17,600	550	11.7	10.4	62.5	54.2	59.2	51.2
		538ANX024000	22,600	550	12.0	10.8	- -	- -	65.5	57.2
		538JNX024000	22,600	550	11.3	11.3	- -	- -	63.2	54.9

Under Ceiling

Nominal Capacity Tons	Indoor Unit	Outdoor Unit	ARI Capacity Btuh	ARI CFM	SEER	EER	Sound Rating (dBa)			
							Indoor Power	Indoor Pressure	Outdoor Power	Outdoor Pressure
1.5	619CNX0240E0AC	538ANX018000	18,000	500	12.0	11.0	57.2	48.9	66.1	57.8
		538JNX018000	18,000	500	11.6	10.5	- -	- -	59.5	51.2
2.0	619CNX0240E0AC	538ANX024000	22,800	600	12.0	11.0	58.4	50.1	65.5	57.2
		538JNX024000	23,000	600	11.0	11.2	- -	- -	63.2	54.9
2.5	619CNX0360E0AC	538ANX030000	30,000	840	12.0	11.0	68.4	60.1	63.0	54.7
		538JNX030000	29,000	840	10.3	9.7	- -	- -	59.5	51.2
3.0	619CNX0360E0AC	538ANX,APX,AEX,036000	34,000	840	12.0	10.5	68.4	60.1	64.5	56.2
		538JNX036000	34,000	840	10.1	9.6	- -	- -	64.7	56.4
4.0	619CNX0480E0AC	538ANX,APX,AEX,048000	47,000	1,200	12.0	10.8	67.3	59	70.1	61.8
		538JNX048000	45,500	1,200	10.8	9.9	- -	- -	65.4	57.1
5.0	619CNX0600E0AC	538ANX,APX,AEX,060000	58,000	1,600	12.0	11.2	70.1	61.8	69.4	61.1
		538JNX060000	58,500	1,600	10.8	9.5	- -	- -	65.8	57.5

Cassette

Nominal Capacity Tons	Indoor Unit	Outdoor Unit	ARI Capacity Btuh	ARI CFM	SEER	EER	Sound Rating (dBa)			
							Indoor Power	Indoor Pressure	Outdoor Power	Outdoor Pressure
1.5	619FNX0240E0	538ANX018000	18,300	525	11.0	10.4	56.3	48	66.1	57.8
		538JNX018000	17,800	525	11.4	10.6	- -	- -	59.5	51.2
	619FNX0360E0	538ANX024000	24,000	915	11.0	10.9	54.8	46.5	65.5	57.2
2.0		538JNX024000	24,000	915	11.8	11.3	- -	- -	63.2	54.9
2.5		538ANX030000	30,000	915	10.8	9.6	- -	- -	63.0	54.7
3.0		538JNX030000	29,000	915	11.1	10.1	- -	- -	59.5	51.2
		538ANX,APX,AEX,036000	33,000	915	10.8	10.5	- -	- -	64.5	56.2
		538JNX036000	34,400	915	10.5	9.7	- -	- -	64.7	56.4

Console

Nominal Capacity Tons	Indoor Unit	Outdoor Unit	ARI Capacity Btuh	ARI CFM	SEER	EER	Sound Rating (dBa)			
							Indoor Power	Indoor Pressure	Outdoor Power	Outdoor Pressure
1.5	40CG-018---3	38CG-018---3	18,000	650	10	9.0	55.0	38.0	79.0	49.0
2	40CG-024---3	38CG-024---3	23,400	800	10	9.1	56.0	40.0	74.0	49.0
2.5	40CG-030---3	38CG-030---3	30,000	800	10	9.0	55.0	40.0	78.0	49.0

Console Multi Split

Nominal Capacity Tons	Indoor Unit	Outdoor Unit	ARI Capacity Btuh	ARI CFM	SEER	EER	Sound Rating (dBa)			
							Indoor Power	Indoor Pressure	Outdoor Power	Outdoor Pressure
2.5	40CG-030---3	38SC-030---3	30,000	800	10	9.0	55.0	40.0	80.0	49.0

CFM - Cubic Feet Per Minute
SEER - Seasonal Energy Efficiency Rating

01/04/02

Cooling Only System Specifications

High Wall

Nominal Capacity Tons	Indoor Unit	Outdoor Unit	ARI Capacity Btuh	ARI CFM	SEER	EER	Sound Rating (dBa)			
							Indoor Power	Indoor Pressure	Outdoor Power	Outdoor Pressure
0.75	619EAX0090E0	538CAX009000	8,500	215	10.5	9.7	50.4	42.1	62.3	54
1.0	619EAX0120E0	538CAX012000	11,000	300	10.5	9.3	54.0	45.7	63.1	54.8
	619ENX0120E0	538CNX012000	11,600	302	11.0	10.1	54.0	45.7	63.1	54.8
1.5	619ENX0180E0	538ANX018000	17,300	480	11.3	10.4	57.6	49.3	66.1	57.8
		538JNX018000	16,200	480	11.0	9.7	57.6	49.3	59.5	51.2
2.0	619ENX0240E0	538JNX018000	17,600	550	11.7	10.4	62.5	54.2	59.2	51.2
		538ANX024000	22,600	550	12.0	10.8	- -	- -	65.5	57.2
		538JNX024000	22,600	550	11.3	11.3	- -	- -	63.2	54.9

Under Ceiling

Nominal Capacity Tons	Indoor Unit	Outdoor Unit	ARI Capacity Btuh	ARI CFM	SEER	EER	Sound Rating (dBa)			
							Indoor Power	Indoor Pressure	Outdoor Power	Outdoor Pressure
1.5	619CNX0240E0AC	538ANX018000	18,000	500	12.0	11.0	57.2	48.9	66.1	57.8
		538JNX018000	18,000	500	11.6	10.5	- -	- -	59.5	51.2
2.0	619CNX0240E0AC	538ANX024000	22,800	600	12.0	11.0	58.4	50.1	65.5	57.2
		538JNX024000	23,000	600	11.0	11.2	- -	- -	63.2	54.9
2.5	619CNX0360E0AC	538ANX030000	30,000	840	12.0	11.0	68.4	60.1	63.0	54.7
		538JNX030000	29,000	840	10.3	9.7	- -	- -	59.5	51.2
3.0	619CNX0360E0AC	538ANX,APX,AEX,036000	34,000	840	12.0	10.5	68.4	60.1	64.5	56.2
		538JNX036000	34,000	840	10.1	9.6	- -	- -	64.7	56.4
4.0	619CNX0480E0AC	538ANX,APX,AEX,048000	47,000	1,200	12.0	10.8	67.3	59	70.1	61.8
		538JNX048000	45,500	1,200	10.8	9.9	- -	- -	65.4	57.1
5.0	619CNX0600E0AC	538ANX,APX,AEX,060000	58,000	1,600	12.0	11.2	70.1	61.8	69.4	61.1
		538JNX060000	58,500	1,600	10.8	9.5	- -	- -	65.8	57.5

Cassette

Nominal Capacity Tons	Indoor Unit	Outdoor Unit	ARI Capacity Btuh	ARI CFM	SEER	EER	Sound Rating (dBa)			
							Indoor Power	Indoor Pressure	Outdoor Power	Outdoor Pressure
1.5	619FNX0240E0	538ANX018000	18,300	525	11.0	10.4	56.3	48	66.1	57.8
		538JNX018000	17,800	525	11.4	10.6	- -	- -	59.5	51.2
	619FNX0360E0	538ANX024000	24,000	915	11.0	10.9	54.8	46.5	65.5	57.2
2.0		538JNX024000	24,000	915	11.8	11.3	- -	- -	63.2	54.9
2.5		538ANX030000	30,000	915	10.8	9.6	- -	- -	63.0	54.7
3.0		538JNX030000	29,000	915	11.1	10.1	- -	- -	59.5	51.2
		538ANX,APX,AEX,036000	33,000	915	10.8	10.5	- -	- -	64.5	56.2
		538JNX036000	34,400	915	10.5	9.7	- -	- -	64.7	56.4

Console

Nominal Capacity Tons	Indoor Unit	Outdoor Unit	ARI Capacity Btuh	ARI CFM	SEER	EER	Sound Rating (dBa)			
							Indoor Power	Indoor Pressure	Outdoor Power	Outdoor Pressure
1.5	40CG-018---3	38CG-018---3	18,000	650	10	9.0	55.0	38.0	79.0	49.0
2	40CG-024---3	38CG-024---3	23,400	800	10	9.1	56.0	40.0	74.0	49.0
2.5	40CG-030---3	38CG-030---3	30,000	800	10	9.0	55.0	40.0	78.0	49.0

Console Multi Split

Nominal Capacity Tons	Indoor Unit	Outdoor Unit	ARI Capacity Btuh	ARI CFM	SEER	EER	Sound Rating (dBa)			
							Indoor Power	Indoor Pressure	Outdoor Power	Outdoor Pressure
2.5	40CG-030---3	38SC-030---3	30,000	800	10	9.0	55.0	40.0	80.0	49.0

CFM - Cubic Feet Per Minute
SEER - Seasonal Energy Efficiency Rating

01/04/02

Cooling Only System Specifications

High Wall

Nominal Capacity Tons	Indoor Unit	Outdoor Unit	ARI Capacity Btuh	ARI CFM	SEER	EER	Sound Rating (dBa)			
							Indoor Power	Indoor Pressure	Outdoor Power	Outdoor Pressure
0.75	619EAX0090E0	538CAX009000	8,500	215	10.5	9.7	50.4	42.1	62.3	54
1.0	619EAX0120E0	538CAX012000	11,000	300	10.5	9.3	54.0	45.7	63.1	54.8
	619ENX0120E0	538CNX012000	11,600	302	11.0	10.1	54.0	45.7	63.1	54.8
1.5	619ENX0180E0	538ANX018000	17,300	480	11.3	10.4	57.6	49.3	66.1	57.8
		538JNX018000	16,200	480	11.0	9.7	57.6	49.3	59.5	51.2
2.0	619ENX0240E0	538JNX018000	17,600	550	11.7	10.4	62.5	54.2	59.2	51.2
		538ANX024000	22,600	550	12.0	10.8	- -	- -	65.5	57.2
		538JNX024000	22,600	550	11.3	11.3	- -	- -	63.2	54.9

Under Ceiling

Nominal Capacity Tons	Indoor Unit	Outdoor Unit	ARI Capacity Btuh	ARI CFM	SEER	EER	Sound Rating (dBa)			
							Indoor Power	Indoor Pressure	Outdoor Power	Outdoor Pressure
1.5	619CNX0240E0AC	538ANX018000	18,000	500	12.0	11.0	57.2	48.9	66.1	57.8
		538JNX018000	18,000	500	11.6	10.5	- -	- -	59.5	51.2
2.0	619CNX0240E0AC	538ANX024000	22,800	600	12.0	11.0	58.4	50.1	65.5	57.2
		538JNX024000	23,000	600	11.0	11.2	- -	- -	63.2	54.9
2.5	619CNX0360E0AC	538ANX030000	30,000	840	12.0	11.0	68.4	60.1	63.0	54.7
		538JNX030000	29,000	840	10.3	9.7	- -	- -	59.5	51.2
3.0	619CNX0360E0AC	538ANX,APX,AEX,036000	34,000	840	12.0	10.5	68.4	60.1	64.5	56.2
		538JNX036000	34,000	840	10.1	9.6	- -	- -	64.7	56.4
4.0	619CNX0480E0AC	538ANX,APX,AEX,048000	47,000	1,200	12.0	10.8	67.3	59	70.1	61.8
		538JNX048000	45,500	1,200	10.8	9.9	- -	- -	65.4	57.1
5.0	619CNX0600E0AC	538ANX,APX,AEX,060000	58,000	1,600	12.0	11.2	70.1	61.8	69.4	61.1
		538JNX060000	58,500	1,600	10.8	9.5	- -	- -	65.8	57.5

Cassette

Nominal Capacity Tons	Indoor Unit	Outdoor Unit	ARI Capacity Btuh	ARI CFM	SEER	EER	Sound Rating (dBa)			
							Indoor Power	Indoor Pressure	Outdoor Power	Outdoor Pressure
1.5	619FNX0240E0	538ANX018000	18,300	525	11.0	10.4	56.3	48	66.1	57.8
		538JNX018000	17,800	525	11.4	10.6	- -	- -	59.5	51.2
	619FNX0360E0	538ANX024000	24,000	915	11.0	10.9	54.8	46.5	65.5	57.2
2.0		538JNX024000	24,000	915	11.8	11.3	- -	- -	63.2	54.9
2.5		538ANX030000	30,000	915	10.8	9.6	- -	- -	63.0	54.7
3.0		538JNX030000	29,000	915	11.1	10.1	- -	- -	59.5	51.2
		538ANX,APX,AEX,036000	33,000	915	10.8	10.5	- -	- -	64.5	56.2
		538JNX036000	34,400	915	10.5	9.7	- -	- -	64.7	56.4

Console

Nominal Capacity Tons	Indoor Unit	Outdoor Unit	ARI Capacity Btuh	ARI CFM	SEER	EER	Sound Rating (dBa)			
							Indoor Power	Indoor Pressure	Outdoor Power	Outdoor Pressure
1.5	40CG-018---3	38CG-018---3	18,000	650	10	9.0	55.0	38.0	79.0	49.0
2	40CG-024---3	38CG-024---3	23,400	800	10	9.1	56.0	40.0	74.0	49.0
2.5	40CG-030---3	38CG-030---3	30,000	800	10	9.0	55.0	40.0	78.0	49.0

Console Multi Split

Nominal Capacity Tons	Indoor Unit	Outdoor Unit	ARI Capacity Btuh	ARI CFM	SEER	EER	Sound Rating (dBa)			
							Indoor Power	Indoor Pressure	Outdoor Power	Outdoor Pressure
2.5	40CG-030---3	38SC-030---3	30,000	800	10	9.0	55.0	40.0	80.0	49.0

CFM - Cubic Feet Per Minute
SEER - Seasonal Energy Efficiency Rating

01/04/02

Cooling Only System Specifications

High Wall

Nominal Capacity Tons	Indoor Unit	Outdoor Unit	ARI Capacity Btuh	ARI CFM	SEER	EER	Sound Rating (dBa)			
							Indoor Power	Indoor Pressure	Outdoor Power	Outdoor Pressure
0.75	619EAX0090E0	538CAX009000	8,500	215	10.5	9.7	50.4	42.1	62.3	54
1.0	619EAX0120E0	538CAX012000	11,000	300	10.5	9.3	54.0	45.7	63.1	54.8
	619ENX0120E0	538CNX012000	11,600	302	11.0	10.1	54.0	45.7	63.1	54.8
1.5	619ENX0180E0	538ANX018000	17,300	480	11.3	10.4	57.6	49.3	66.1	57.8
		538JNX018000	16,200	480	11.0	9.7	57.6	49.3	59.5	51.2
2.0	619ENX0240E0	538JNX018000	17,600	550	11.7	10.4	62.5	54.2	59.2	51.2
		538ANX024000	22,600	550	12.0	10.8	- -	- -	65.5	57.2
		538JNX024000	22,600	550	11.3	11.3	- -	- -	63.2	54.9

Under Ceiling

Nominal Capacity Tons	Indoor Unit	Outdoor Unit	ARI Capacity Btuh	ARI CFM	SEER	EER	Sound Rating (dBa)			
							Indoor Power	Indoor Pressure	Outdoor Power	Outdoor Pressure
1.5	619CNX0240E0AC	538ANX018000	18,000	500	12.0	11.0	57.2	48.9	66.1	57.8
		538JNX018000	18,000	500	11.6	10.5	- -	- -	59.5	51.2
2.0	619CNX0240E0AC	538ANX024000	22,800	600	12.0	11.0	58.4	50.1	65.5	57.2
		538JNX024000	23,000	600	11.0	11.2	- -	- -	63.2	54.9
2.5	619CNX0360E0AC	538ANX030000	30,000	840	12.0	11.0	68.4	60.1	63.0	54.7
		538JNX030000	29,000	840	10.3	9.7	- -	- -	59.5	51.2
3.0	619CNX0360E0AC	538ANX,APX,AEX,036000	34,000	840	12.0	10.5	68.4	60.1	64.5	56.2
		538JNX036000	34,000	840	10.1	9.6	- -	- -	64.7	56.4
4.0	619CNX0480E0AC	538ANX,APX,AEX,048000	47,000	1,200	12.0	10.8	67.3	59	70.1	61.8
		538JNX048000	45,500	1,200	10.8	9.9	- -	- -	65.4	57.1
5.0	619CNX0600E0AC	538ANX,APX,AEX,060000	58,000	1,600	12.0	11.2	70.1	61.8	69.4	61.1
		538JNX060000	58,500	1,600	10.8	9.5	- -	- -	65.8	57.5

Cassette

Nominal Capacity Tons	Indoor Unit	Outdoor Unit	ARI Capacity Btuh	ARI CFM	SEER	EER	Sound Rating (dBa)			
							Indoor Power	Indoor Pressure	Outdoor Power	Outdoor Pressure
1.5	619FNX0240E0	538ANX018000	18,300	525	11.0	10.4	56.3	48	66.1	57.8
		538JNX018000	17,800	525	11.4	10.6	- -	- -	59.5	51.2
	619FNX0360E0	538ANX024000	24,000	915	11.0	10.9	54.8	46.5	65.5	57.2
2.0		538JNX024000	24,000	915	11.8	11.3	- -	- -	63.2	54.9
2.5		538ANX030000	30,000	915	10.8	9.6	- -	- -	63.0	54.7
3.0		538JNX030000	29,000	915	11.1	10.1	- -	- -	59.5	51.2
		538ANX,APX,AEX,036000	33,000	915	10.8	10.5	- -	- -	64.5	56.2
		538JNX036000	34,400	915	10.5	9.7	- -	- -	64.7	56.4

Console

Nominal Capacity Tons	Indoor Unit	Outdoor Unit	ARI Capacity Btuh	ARI CFM	SEER	EER	Sound Rating (dBa)			
							Indoor Power	Indoor Pressure	Outdoor Power	Outdoor Pressure
1.5	40CG-018---3	38CG-018---3	18,000	650	10	9.0	55.0	38.0	79.0	49.0
2	40CG-024---3	38CG-024---3	23,400	800	10	9.1	56.0	40.0	74.0	49.0
2.5	40CG-030---3	38CG-030---3	30,000	800	10	9.0	55.0	40.0	78.0	49.0

Console Multi Split

Nominal Capacity Tons	Indoor Unit	Outdoor Unit	ARI Capacity Btuh	ARI CFM	SEER	EER	Sound Rating (dBa)			
							Indoor Power	Indoor Pressure	Outdoor Power	Outdoor Pressure
2.5	40CG-030---3	38SC-030---3	30,000	800	10	9.0	55.0	40.0	80.0	49.0

CFM - Cubic Feet Per Minute
SEER - Seasonal Energy Efficiency Rating

01/04/02

Heat Pump System Specifications

High Wall

Nominal Capacity Tons	Indoor Unit	Outdoor Unit	ARI Capacities C/O Btuh	ARI Capacities H/P Btuh	ARI CFM	SEER	EER	HSPF	Sound Rating (dBa) Indoor Power	Sound Rating (dBa) Indoor Pressure	Sound Rating (dBa) Outdoor Power	Sound Rating (dBa) Outdoor Pressure
0.8	619EAX0090W0	538DAX009000	8,700	9,000	252	10.0	9.2	6.8	50.6	42.3	63.4	55.1
1.0	619ENX0120H0	538DNX012000	11,100	11,700	300	10.0	9.5	6.8	54	45.7	62.8	54.5
1.5	619ENX0180H0	538DNX018000	17,300	16,400	485	11.0	10.1	6.8	58.6	50.3	67.2	58.9
2.0	619ENX0240H0	538DNX024000	23,200	21,000	520	11.0	10.4	6.8	61.7	53.4	63.3	55

Under Ceiling

Nominal Capacity Tons	Indoor Unit	Outdoor Unit	ARI Capacities C/O Btuh	ARI Capacities H/P Btuh	ARI CFM	SEER	EER	HSPF	Sound Rating (dBa) Indoor Power	Sound Rating (dBa) Indoor Pressure	Sound Rating (dBa) Outdoor Power	Sound Rating (dBa) Outdoor Pressure
2.0	619CNX0240W0AC	538BNX018000	19,000	17,000	500	11.0	10.0	7.2	57.2	48.9	67.2	58.9
		538BNX024000	24,000	22,600	525	11.0	10.0	7.3	--	--	66.3	58
3.0	619CNX0360W0AC	538BNX030000	30,000	28,000	870	11.0	10.2	7.4	68.4	60.1	65.9	57.6
		538BNX036000	34,600	33,000	870	11.5	10.2	7.2	--	--	66.2	57.9
		538BPX,BEX,036000	36,000	34,400	870	11.0	9.8	6.8	--	--	71.5	63.2
4.0	619CNX0480W0AC	538BNX,BPX,BEX,048000	48,000	45,500	1100	10.2	9.6	7.3	67.3	59	73	64.7
5.0	619CNX0600W0AA	538BNX,BPX,BEX,060000	58,000	57,500	1600	11.0	11.0	7.4	70.1	61.8	73.6	65.3

Cassette

Nominal Capacity Tons	Indoor Unit	Outdoor Unit	ARI Capacities C/O Btuh	ARI Capacities H/P Btuh	ARI CFM	SEER	EER	HSPF	Sound Rating (dBa) Indoor Power	Sound Rating (dBa) Indoor Pressure	Sound Rating (dBa) Outdoor Power	Sound Rating (dBa) Outdoor Pressure
1.8	619FNX0240W0	538BNX018000	18,000	17,600	525	10.0	9.0	6.8	56.3	48	67.2	58.9
2.0	619FNX0360W0	538BNX024000	25,000	23,800	980	10.7	10.2	7.6	54.8	46.5	66.3	58
		538BNX030000	29,000	27,000	980	11.5	11.1	7.6	--	--	65.9	57.6
3.0	619FNX0480W0	538BNX036000	33,000	33,000	1100	10.5	9.5	6.8	59.1	50.8	66.2	57.9
		538BPX,BEX,036000	34,400	34,000	1100	10.0	9.2	6.8	--	--	71.5	63.2

Console

Nominal Capacity Tons	Indoor Unit	Outdoor Unit	ARI Capacities C/O Btuh	ARI Capacities H/P Btuh	ARI CFM	SEER	EER	HSPF	Sound Rating (dBa) Indoor Power	Sound Rating (dBa) Indoor Pressure	Sound Rating (dBa) Outdoor Power	Sound Rating (dBa) Outdoor Pressure
1.5	40CS-018---3	38CS-018---3	18,000	18,000	650	10.0	9.0	6.8	55.0	38.0	79.0	49.0
2	40CS-024---3	38CS-024---3	23,400	24,000	800	10.0	9.1	6.9	56.0	40.0	74.0	49.0
2.5	40CS-030---3	38CS-030---3	30,000	31,000	800	10.0	9.0	6.8	55.0	40.0	78.0	49.0

Console Multi Split

Nominal Capacity Tons	Indoor Unit	Outdoor Unit	ARI Capacities C/O Btuh	ARI Capacities H/P Btuh	ARI CFM	SEER	EER	HSPF	Sound Rating (dBa) Indoor Power	Sound Rating (dBa) Indoor Pressure	Sound Rating (dBa) Outdoor Power	Sound Rating (dBa) Outdoor Pressure
2.5	40CS-030---3	38SB-030---3	30,000	31,000	800	10.0	9.0	6.8	55.0	40.0	80.0	49.0

CFM - Cubic Feet Per Minute
HSPF - Heating Seasonal Performance Factor
SEER - Seasonal Energy Efficiency Rating
C/O - Cooling Only
H/P - Heat Pump

01/04/02

Heat Pump System Specifications

High Wall

Nominal Capacity Tons	Indoor Unit	Outdoor Unit	ARI Capacities C/O Btuh	ARI Capacities H/P Btuh	ARI CFM	SEER	EER	HSPF	Sound Rating (dBa) Indoor Power	Sound Rating (dBa) Indoor Pressure	Sound Rating (dBa) Outdoor Power	Sound Rating (dBa) Outdoor Pressure
0.8	619EAX0090W0	538DAX009000	8,700	9,000	252	10.0	9.2	6.8	50.6	42.3	63.4	55.1
1.0	619ENX0120H0	538DNX012000	11,100	11,700	300	10.0	9.5	6.8	54	45.7	62.8	54.5
1.5	619ENX0180H0	538DNX018000	17,300	16,400	485	11.0	10.1	6.8	58.6	50.3	67.2	58.9
2.0	619ENX0240H0	538DNX024000	23,200	21,000	520	11.0	10.4	6.8	61.7	53.4	63.3	55

Under Ceiling

Nominal Capacity Tons	Indoor Unit	Outdoor Unit	ARI Capacities C/O Btuh	ARI Capacities H/P Btuh	ARI CFM	SEER	EER	HSPF	Sound Rating (dBa) Indoor Power	Sound Rating (dBa) Indoor Pressure	Sound Rating (dBa) Outdoor Power	Sound Rating (dBa) Outdoor Pressure
2.0	619CNX0240W0AC	538BNX018000	19,000	17,000	500	11.0	10.0	7.2	57.2	48.9	67.2	58.9
		538BNX024000	24,000	22,600	525	11.0	10.0	7.3	--	--	66.3	58
3.0	619CNX0360W0AC	538BNX030000	30,000	28,000	870	11.0	10.2	7.4	68.4	60.1	65.9	57.6
		538BNX036000	34,600	33,000	870	11.5	10.2	7.2	--	--	66.2	57.9
		538BPX,BEX,036000	36,000	34,400	870	11.0	9.8	6.8	--	--	71.5	63.2
4.0	619CNX0480W0AC	538BNX,BPX,BEX,048000	48,000	45,500	1100	10.2	9.6	7.3	67.3	59	73	64.7
5.0	619CNX0600W0AA	538BNX,BPX,BEX,060000	58,000	57,500	1600	11.0	11.0	7.4	70.1	61.8	73.6	65.3

Cassette

Nominal Capacity Tons	Indoor Unit	Outdoor Unit	ARI Capacities C/O Btuh	ARI Capacities H/P Btuh	ARI CFM	SEER	EER	HSPF	Sound Rating (dBa) Indoor Power	Sound Rating (dBa) Indoor Pressure	Sound Rating (dBa) Outdoor Power	Sound Rating (dBa) Outdoor Pressure
1.8	619FNX0240W0	538BNX018000	18,000	17,600	525	10.0	9.0	6.8	56.3	48	67.2	58.9
2.0	619FNX0360W0	538BNX024000	25,000	23,800	980	10.7	10.2	7.6	54.8	46.5	66.3	58
		538BNX030000	29,000	27,000	980	11.5	11.1	7.6	--	--	65.9	57.6
3.0	619FNX0480W0	538BNX036000	33,000	33,000	1100	10.5	9.5	6.8	59.1	50.8	66.2	57.9
		538BPX,BEX,036000	34,400	34,000	1100	10.0	9.2	6.8	--	--	71.5	63.2

Console

Nominal Capacity Tons	Indoor Unit	Outdoor Unit	ARI Capacities C/O Btuh	ARI Capacities H/P Btuh	ARI CFM	SEER	EER	HSPF	Sound Rating (dBa) Indoor Power	Sound Rating (dBa) Indoor Pressure	Sound Rating (dBa) Outdoor Power	Sound Rating (dBa) Outdoor Pressure
1.5	40CS-018---3	38CS-018---3	18,000	18,000	650	10.0	9.0	6.8	55.0	38.0	79.0	49.0
2	40CS-024---3	38CS-024---3	23,400	24,000	800	10.0	9.1	6.9	56.0	40.0	74.0	49.0
2.5	40CS-030---3	38CS-030---3	30,000	31,000	800	10.0	9.0	6.8	55.0	40.0	78.0	49.0

Console Multi Split

Nominal Capacity Tons	Indoor Unit	Outdoor Unit	ARI Capacities C/O Btuh	ARI Capacities H/P Btuh	ARI CFM	SEER	EER	HSPF	Sound Rating (dBa) Indoor Power	Sound Rating (dBa) Indoor Pressure	Sound Rating (dBa) Outdoor Power	Sound Rating (dBa) Outdoor Pressure
2.5	40CS-030---3	38SB-030---3	30,000	31,000	800	10.0	9.0	6.8	55.0	40.0	80.0	49.0

CFM - Cubic Feet Per Minute
HSPF - Heating Seasonal Performance Factor
SEER - Seasonal Energy Efficiency Rating
C/O - Cooling Only
H/P - Heat Pump

01/04/02

Heat Pump System Specifications

High Wall

Nominal Capacity Tons	Indoor Unit	Outdoor Unit	ARI Capacities C/O Btuh	ARI Capacities H/P Btuh	ARI CFM	SEER	EER	HSPF	Sound Rating (dBa) Indoor Power	Sound Rating (dBa) Indoor Pressure	Sound Rating (dBa) Outdoor Power	Sound Rating (dBa) Outdoor Pressure
0.8	619EAX0090W0	538DAX009000	8,700	9,000	252	10.0	9.2	6.8	50.6	42.3	63.4	55.1
1.0	619ENX0120H0	538DNX012000	11,100	11,700	300	10.0	9.5	6.8	54	45.7	62.8	54.5
1.5	619ENX0180H0	538DNX018000	17,300	16,400	485	11.0	10.1	6.8	58.6	50.3	67.2	58.9
2.0	619ENX0240H0	538DNX024000	23,200	21,000	520	11.0	10.4	6.8	61.7	53.4	63.3	55

Under Ceiling

Nominal Capacity Tons	Indoor Unit	Outdoor Unit	ARI Capacities C/O Btuh	ARI Capacities H/P Btuh	ARI CFM	SEER	EER	HSPF	Sound Rating (dBa) Indoor Power	Sound Rating (dBa) Indoor Pressure	Sound Rating (dBa) Outdoor Power	Sound Rating (dBa) Outdoor Pressure
2.0	619CNX0240W0AC	538BNX018000	19,000	17,000	500	11.0	10.0	7.2	57.2	48.9	67.2	58.9
		538BNX024000	24,000	22,600	525	11.0	10.0	7.3	--	--	66.3	58
3.0	619CNX0360W0AC	538BNX030000	30,000	28,000	870	11.0	10.2	7.4	68.4	60.1	65.9	57.6
		538BNX036000	34,600	33,000	870	11.5	10.2	7.2	--	--	66.2	57.9
		538BPX,BEX,036000	36,000	34,400	870	11.0	9.8	6.8	--	--	71.5	63.2
4.0	619CNX0480W0AC	538BNX,BPX,BEX,048000	48,000	45,500	1100	10.2	9.6	7.3	67.3	59	73	64.7
5.0	619CNX0600W0AA	538BNX,BPX,BEX,060000	58,000	57,500	1600	11.0	11.0	7.4	70.1	61.8	73.6	65.3

Cassette

Nominal Capacity Tons	Indoor Unit	Outdoor Unit	ARI Capacities C/O Btuh	ARI Capacities H/P Btuh	ARI CFM	SEER	EER	HSPF	Sound Rating (dBa) Indoor Power	Sound Rating (dBa) Indoor Pressure	Sound Rating (dBa) Outdoor Power	Sound Rating (dBa) Outdoor Pressure
1.8	619FNX0240W0	538BNX018000	18,000	17,600	525	10.0	9.0	6.8	56.3	48	67.2	58.9
2.0	619FNX0360W0	538BNX024000	25,000	23,800	980	10.7	10.2	7.6	54.8	46.5	66.3	58
		538BNX030000	29,000	27,000	980	11.5	11.1	7.6	--	--	65.9	57.6
3.0	619FNX0480W0	538BNX036000	33,000	33,000	1100	10.5	9.5	6.8	59.1	50.8	66.2	57.9
		538BPX,BEX,036000	34,400	34,000	1100	10.0	9.2	6.8	--	--	71.5	63.2

Console

Nominal Capacity Tons	Indoor Unit	Outdoor Unit	ARI Capacities C/O Btuh	ARI Capacities H/P Btuh	ARI CFM	SEER	EER	HSPF	Sound Rating (dBa) Indoor Power	Sound Rating (dBa) Indoor Pressure	Sound Rating (dBa) Outdoor Power	Sound Rating (dBa) Outdoor Pressure
1.5	40CS-018---3	38CS-018---3	18,000	18,000	650	10.0	9.0	6.8	55.0	38.0	79.0	49.0
2	40CS-024---3	38CS-024---3	23,400	24,000	800	10.0	9.1	6.9	56.0	40.0	74.0	49.0
2.5	40CS-030---3	38CS-030---3	30,000	31,000	800	10.0	9.0	6.8	55.0	40.0	78.0	49.0

Console Multi Split

Nominal Capacity Tons	Indoor Unit	Outdoor Unit	ARI Capacities C/O Btuh	ARI Capacities H/P Btuh	ARI CFM	SEER	EER	HSPF	Sound Rating (dBa) Indoor Power	Sound Rating (dBa) Indoor Pressure	Sound Rating (dBa) Outdoor Power	Sound Rating (dBa) Outdoor Pressure
2.5	40CS-030---3	38SB-030---3	30,000	31,000	800	10.0	9.0	6.8	55.0	40.0	80.0	49.0

CFM - Cubic Feet Per Minute
HSPF - Heating Seasonal Performance Factor
SEER - Seasonal Energy Efficiency Rating
C/O - Cooling Only
H/P - Heat Pump

01/04/02

Heat Pump System Specifications

High Wall

Nominal Capacity Tons	Indoor Unit	Outdoor Unit	ARI Capacities C/O Btuh	ARI Capacities H/P Btuh	ARI CFM	SEER	EER	HSPF	Sound Rating (dBa) Indoor Power	Sound Rating (dBa) Indoor Pressure	Sound Rating (dBa) Outdoor Power	Sound Rating (dBa) Outdoor Pressure
0.8	619EAX0090W0	538DAX009000	8,700	9,000	252	10.0	9.2	6.8	50.6	42.3	63.4	55.1
1.0	619ENX0120H0	538DNX012000	11,100	11,700	300	10.0	9.5	6.8	54	45.7	62.8	54.5
1.5	619ENX0180H0	538DNX018000	17,300	16,400	485	11.0	10.1	6.8	58.6	50.3	67.2	58.9
2.0	619ENX0240H0	538DNX024000	23,200	21,000	520	11.0	10.4	6.8	61.7	53.4	63.3	55

Under Ceiling

Nominal Capacity Tons	Indoor Unit	Outdoor Unit	ARI Capacities C/O Btuh	ARI Capacities H/P Btuh	ARI CFM	SEER	EER	HSPF	Sound Rating (dBa) Indoor Power	Sound Rating (dBa) Indoor Pressure	Sound Rating (dBa) Outdoor Power	Sound Rating (dBa) Outdoor Pressure
2.0	619CNX0240W0AC	538BNX018000	19,000	17,000	500	11.0	10.0	7.2	57.2	48.9	67.2	58.9
		538BNX024000	24,000	22,600	525	11.0	10.0	7.3	--	--	66.3	58
3.0	619CNX0360W0AC	538BNX030000	30,000	28,000	870	11.0	10.2	7.4	68.4	60.1	65.9	57.6
		538BNX036000	34,600	33,000	870	11.5	10.2	7.2	--	--	66.2	57.9
		538BPX,BEX,036000	36,000	34,400	870	11.0	9.8	6.8	--	--	71.5	63.2
4.0	619CNX0480W0AC	538BNX,BPX,BEX,048000	48,000	45,500	1100	10.2	9.6	7.3	67.3	59	73	64.7
5.0	619CNX0600W0AA	538BNX,BPX,BEX,060000	58,000	57,500	1600	11.0	11.0	7.4	70.1	61.8	73.6	65.3

Cassette

Nominal Capacity Tons	Indoor Unit	Outdoor Unit	ARI Capacities C/O Btuh	ARI Capacities H/P Btuh	ARI CFM	SEER	EER	HSPF	Sound Rating (dBa) Indoor Power	Sound Rating (dBa) Indoor Pressure	Sound Rating (dBa) Outdoor Power	Sound Rating (dBa) Outdoor Pressure
1.8	619FNX0240W0	538BNX018000	18,000	17,600	525	10.0	9.0	6.8	56.3	48	67.2	58.9
2.0	619FNX0360W0	538BNX024000	25,000	23,800	980	10.7	10.2	7.6	54.8	46.5	66.3	58
		538BNX030000	29,000	27,000	980	11.5	11.1	7.6	--	--	65.9	57.6
3.0	619FNX0480W0	538BNX036000	33,000	33,000	1100	10.5	9.5	6.8	59.1	50.8	66.2	57.9
		538BPX,BEX,036000	34,400	34,000	1100	10.0	9.2	6.8	--	--	71.5	63.2

Console

Nominal Capacity Tons	Indoor Unit	Outdoor Unit	ARI Capacities C/O Btuh	ARI Capacities H/P Btuh	ARI CFM	SEER	EER	HSPF	Sound Rating (dBa) Indoor Power	Sound Rating (dBa) Indoor Pressure	Sound Rating (dBa) Outdoor Power	Sound Rating (dBa) Outdoor Pressure
1.5	40CS-018---3	38CS-018---3	18,000	18,000	650	10.0	9.0	6.8	55.0	38.0	79.0	49.0
2	40CS-024---3	38CS-024---3	23,400	24,000	800	10.0	9.1	6.9	56.0	40.0	74.0	49.0
2.5	40CS-030---3	38CS-030---3	30,000	31,000	800	10.0	9.0	6.8	55.0	40.0	78.0	49.0

Console Multi Split

Nominal Capacity Tons	Indoor Unit	Outdoor Unit	ARI Capacities C/O Btuh	ARI Capacities H/P Btuh	ARI CFM	SEER	EER	HSPF	Sound Rating (dBa) Indoor Power	Sound Rating (dBa) Indoor Pressure	Sound Rating (dBa) Outdoor Power	Sound Rating (dBa) Outdoor Pressure
2.5	40CS-030---3	38SB-030---3	30,000	31,000	800	10.0	9.0	6.8	55.0	40.0	80.0	49.0

CFM - Cubic Feet Per Minute
HSPF - Heating Seasonal Performance Factor
SEER - Seasonal Energy Efficiency Rating
C/O - Cooling Only
H/P - Heat Pump

01/04/02

Heat Pump System Specifications

High Wall

Nominal Capacity Tons	Indoor Unit	Outdoor Unit	ARI Capacities C/O Btuh	ARI Capacities H/P Btuh	ARI CFM	SEER	EER	HSPF	Sound Rating (dBa) Indoor Power	Sound Rating (dBa) Indoor Pressure	Sound Rating (dBa) Outdoor Power	Sound Rating (dBa) Outdoor Pressure
0.8	619EAX0090W0	538DAX009000	8,700	9,000	252	10.0	9.2	6.8	50.6	42.3	63.4	55.1
1.0	619ENX0120H0	538DNX012000	11,100	11,700	300	10.0	9.5	6.8	54	45.7	62.8	54.5
1.5	619ENX0180H0	538DNX018000	17,300	16,400	485	11.0	10.1	6.8	58.6	50.3	67.2	58.9
2.0	619ENX0240H0	538DNX024000	23,200	21,000	520	11.0	10.4	6.8	61.7	53.4	63.3	55

Under Ceiling

Nominal Capacity Tons	Indoor Unit	Outdoor Unit	ARI Capacities C/O Btuh	ARI Capacities H/P Btuh	ARI CFM	SEER	EER	HSPF	Sound Rating (dBa) Indoor Power	Sound Rating (dBa) Indoor Pressure	Sound Rating (dBa) Outdoor Power	Sound Rating (dBa) Outdoor Pressure
2.0	619CNX0240W0AC	538BNX018000	19,000	17,000	500	11.0	10.0	7.2	57.2	48.9	67.2	58.9
		538BNX024000	24,000	22,600	525	11.0	10.0	7.3	--	--	66.3	58
3.0	619CNX0360W0AC	538BNX030000	30,000	28,000	870	11.0	10.2	7.4	68.4	60.1	65.9	57.6
		538BNX036000	34,600	33,000	870	11.5	10.2	7.2	--	--	66.2	57.9
		538BPX,BEX,036000	36,000	34,400	870	11.0	9.8	6.8	--	--	71.5	63.2
4.0	619CNX0480W0AC	538BNX,BPX,BEX,048000	48,000	45,500	1100	10.2	9.6	7.3	67.3	59	73	64.7
5.0	619CNX0600W0AA	538BNX,BPX,BEX,060000	58,000	57,500	1600	11.0	11.0	7.4	70.1	61.8	73.6	65.3

Cassette

Nominal Capacity Tons	Indoor Unit	Outdoor Unit	ARI Capacities C/O Btuh	ARI Capacities H/P Btuh	ARI CFM	SEER	EER	HSPF	Sound Rating (dBa) Indoor Power	Sound Rating (dBa) Indoor Pressure	Sound Rating (dBa) Outdoor Power	Sound Rating (dBa) Outdoor Pressure
1.8	619FNX0240W0	538BNX018000	18,000	17,600	525	10.0	9.0	6.8	56.3	48	67.2	58.9
2.0	619FNX0360W0	538BNX024000	25,000	23,800	980	10.7	10.2	7.6	54.8	46.5	66.3	58
		538BNX030000	29,000	27,000	980	11.5	11.1	7.6	--	--	65.9	57.6
3.0	619FNX0480W0	538BNX036000	33,000	33,000	1100	10.5	9.5	6.8	59.1	50.8	66.2	57.9
		538BPX,BEX,036000	34,400	34,000	1100	10.0	9.2	6.8	--	--	71.5	63.2

Console

Nominal Capacity Tons	Indoor Unit	Outdoor Unit	ARI Capacities C/O Btuh	ARI Capacities H/P Btuh	ARI CFM	SEER	EER	HSPF	Sound Rating (dBa) Indoor Power	Sound Rating (dBa) Indoor Pressure	Sound Rating (dBa) Outdoor Power	Sound Rating (dBa) Outdoor Pressure
1.5	40CS-018---3	38CS-018---3	18,000	18,000	650	10.0	9.0	6.8	55.0	38.0	79.0	49.0
2	40CS-024---3	38CS-024---3	23,400	24,000	800	10.0	9.1	6.9	56.0	40.0	74.0	49.0
2.5	40CS-030---3	38CS-030---3	30,000	31,000	800	10.0	9.0	6.8	55.0	40.0	78.0	49.0

Console Multi Split

Nominal Capacity Tons	Indoor Unit	Outdoor Unit	ARI Capacities C/O Btuh	ARI Capacities H/P Btuh	ARI CFM	SEER	EER	HSPF	Sound Rating (dBa) Indoor Power	Sound Rating (dBa) Indoor Pressure	Sound Rating (dBa) Outdoor Power	Sound Rating (dBa) Outdoor Pressure
2.5	40CS-030---3	38SB-030---3	30,000	31,000	800	10.0	9.0	6.8	55.0	40.0	80.0	49.0

CFM - Cubic Feet Per Minute
HSPF - Heating Seasonal Performance Factor
SEER - Seasonal Energy Efficiency Rating
C/O - Cooling Only
H/P - Heat Pump

01/04/02

Unit Specifications

Model	Voltage	MCA	MOCP	Vert Lift Note #1	Vert Drop Note #1	Max Tube Lgth	Tube Connections Liquid	Tube Connections Vapor	Dimensions Width	Dimensions Height	Dimensions Depth	Weight
619EAX0090E0	115-1-60	Note #2	Note #2	--	--	--	--	--	33.5	11.0	6.3	18.7
619EAX0120E0	115-1-60	Note #2	Note #2	--	--	--	--	--	33.6	11.8	7.3	24.2
619ENX0120E0	208/230-1-60	Note #2	Note #2	--	--	--	--	--	33.6	11.8	7.3	24.2
619ENX0180E0	208/230-1-60	0.66	15	--	--	--	--	--	45.3	14.2	8.7	38.5
619ENX0240E0	208/230-1-60	0.66	15	--	--	--	--	--	45.3	14.2	8.7	42.9
619EAX0090W0	115-1-60	Note #2	Note #2	--	--	--	--	--	33.5	11.0	6.3	18.7
619ENX0120H0	208/230-1-60	Note #2	Note #2	--	--	--	--	--	33.6	11.8	7.3	24.2
619ENX0180H0	208/230-1-60	10.9	15	--	--	--	--	--	45.3	14.2	8.7	38.5
619ENX0240H0	208/230-1-60	10.9	15	--	--	--	--	--	45.3	14.2	8.7	42.9
619CNX0240E0AC	208/230-1-60	0.63	15	--	--	--	--	--	50.9	10.3	23.1	108.0
619CNX0360E0AC	208/230-1-60	1.60	15	--	--	--	--	--	58.8	10.3	23.1	117.0
619CNX0480E0AC	208/230-1-60	2.00	15	--	--	--	--	--	71.6	10.3	23.1	149.0
619CNX0600E0AA	208/230-1-60	3.30	15	--	--	--	--	--	92.0	10.3	23.1	179.0
619CNX0240W0AC	208/230-1-60	9.29	15	--	--	--	--	--	50.9	10.3	23.1	110.0
619CNX0360W0AC	208/230-1-60	17.70	20	--	--	--	--	--	58.8	10.3	23.1	119.0
619CNX0480W0AC	208/230-1-60	23.80	25	--	--	--	--	--	71.6	10.3	23.1	151.0
619CNX0600W0AA	208/230-1-60	28.70	30	--	--	--	--	--	92.0	10.3	23.1	181.0
619FNX0240E0	208/230-1-60	0.55	15	--	--	--	--	--	28.0	11.8	28.0	61.6
619FNX0360E0	208/230-1-60	1.10	15	--	--	--	--	--	49.6	11.8	28.0	105.8
619FNX0240W0	208/230-1-60	.6/7.5	15/15	--	--	--	--	--	28.0	11.8	28.0	66.1
619FNX0360W0	208/230-1-60	1.0/15.0	15/15	--	--	--	--	--	49.6	11.8	28.0	105.8
619FNX0480W0	208/230-1-60	1.3/15.0	15/15	--	--	--	--	--	49.6	11.8	28.0	118.0
40CG-018-301RM	208/230-1-60	Note #2	Note #2	--	--	--	--	--	39.4	24	8.9	66.0
40CG-024-301RM	208/230-1-60	Note #2	Note #2	--	--	--	--	--	47.3	24	8.9	77.0
40CG-030-301RM	208/230-1-60	Note #2	Note #2	--	--	--	--	--	47.3	24	8.9	77.0
40CS-018-301RM	208/230-1-60	Note #2	Note #2	--	--	--	--	--	39.4	24	8.9	66.0
40CS-024-301RM	208/230-1-60	Note #2	Note #2	--	--	--	--	--	47.3	24	8.9	77.0
40CS-030-301RM	208/230-1-60	Note #2	Note #2	--	--	--	--	--	47.3	24	8.9	77.0
538CAX009000	115-1-60	12.10	15	30'	30'	50'	1/4" od	1/2" od	26.1	23.3	8.9	55.0
538CAX012000	115-1-60	17.00	15	30'	30'	50'	1/4" od	1/2" od	26.1	23.3	8.9	62.0
538CNX012000	208/230-1-60	8.50	15	30'	30'	50'	1/4" od	1/2" od	26.1	23.3	8.9	62.0
538DAX009000	115-1-60	11.20	15	30'	30'	50'	1/4" od	1/2" od	26.1	23.3	8.9	60.7
538DNX012000	208/230-1-60	12.00	15	30'	30'	50'	1/4" od	1/2" od	26.1	23.3	8.9	66.5
538DNX018000	208/230-1-60	13.00	20	65'	150'	200'	3/8" od	5/8" od	36.9	25.1	14.6	154.0
538DNX024000	208/230-1-60	15.30	25	65'	150'	200'	3/8" od	5/8" od	36.9	25.1	14.6	167.0
538ANX018000	208/230-1-60	10.70	15	65'	150'	200'	3/8" od	5/8" od	36.9	25.1	14.6	150.0
538ANX024000	208/230-1-60	16.80	25	65'	150'	200'	3/8" od	5/8" od	36.9	25.1	14.6	154.0
538ANX030000	208/230-1-60	19.50	30	65'	150'	200'	3/8" od	3/4" od	36.9	25.1	14.6	169.0
538ANX036000	208/230-1-60	23.20	40	65'	150'	200'	3/8" od	7/8" od *	36.9	25.1	14.6	179.0
538APX036000	208/230-3-60	15.00	25	65'	150'	200'	3/8" od	7/8" od *	36.9	25.1	14.6	179.0
538AEX036000	460-3-60	7.50	15	65'	150'	200'	3/8" od	7/8" od *	36.9	25.1	14.6	179.0
538ANX048000	208/230-1-60	34.50	60	65'	150'	200'	3/8" od	7/8" od	44.6	37.2	17.1	270.0
538APX048000	208/230-3-60	20.20	35	65'	150'	200'	3/8" od	7/8" od	44.6	37.2	17.1	270.0
538AEX048000	460-3-60	11.10	15	65'	150'	200'	3/8" od	7/8" od	44.6	37.2	17.1	270.0
538ANX060000	208/230-1-60	36.60	60	65'	150'	200'	3/8" od	1 1/8" od **	44.6	37.2	17.1	290.0
538APX060000	208/230-3-60	21.50	35	65'	150'	200'	3/8" od	1 1/8" od **	44.6	37.2	17.1	290.0
538AEX060000	460-3-60	10.80	15	65'	150'	200'	3/8" od	1 1/8" od **	44.6	37.2	17.1	290.0
538JNX018000	208/230-1-60	14.10	25	65'	75'	100'	3/8" od	5/8" od	36.9	25.1	14.5	130.0
538JNX024000	208/230-1-60	17.20	30	65'	75'	100'	3/8" od	5/8" od	36.9	25.1	14.5	136.0
538JNX030000	208/230-1-60	20.30	35	65'	75'	100'	3/8" od	3/4" od	36.9	25.1	14.5	161.0
538JNX036000	208/230-1-60	21.20	30	65'	75'	100'	3/8" od	3/4" od	36.9	25.1	14.5	185.0
538JNX048000	208/230-1-60	31.80	50	65'	75'	100'	3/8" od	3/4" od	44.6	37.2	17	222.0
538JNX060000	208/230-1-60	37.20	65	65'	75'	100'	3/8" od	3/4" od	44.6	37.2	17	249.0
538SNX024000	208/230-1-60	16.80	25	30'	30'	50'	3/8" od (2)	5/8" od (2)	36.9	25.1	14.5	159.0
538BNX018000	208/230-1-60	13.00	20	65'	150'	200'	3/8" od	5/8" od	36.9	25.1	14.6	154.0
538BNX024000	208/230-1-60	15.30	25	65'	150'	200'	3/8" od	5/8" od	36.9	25.1	14.6	167.0
538BNX030000	208/230-1-60	17.60	30	65'	150'	200'	3/8" od	3/4" od	36.9	25.1	14.6	180.0
538BNX036000	208/230-1-60	23.10	40	65'	150'	200'	3/8" od	7/8" od *	36.9	25.1	14.6	184.0
538BPX036000	208/230-3-60	15.50	25	65'	150'	200'	3/8" od	3/4" od	44.6	37.2	17.1	249.0
538BEX036000	460-3-60	7.30	15	65'	150'	200'	3/8" od	3/4" od	44.6	37.2	17.1	249.0
538BNX048000	208/230-1-60	30.50	50	65'	150'	200'	3/8" od	7/8" od	44.6	37.2	17.1	252.0
538BPX048000	208/230-3-60	20.60	35	65'	150'	200'	3/8" od	7/8" od	44.6	37.2	17.1	252.0
538BEX048000	460-3-60	9.90	15	65'	150'	200'	3/8" od	7/8" od	44.6	37.2	17.1	252.0
538BNX060000	208/230-1-60	42.00	60	65'	150'	200'	3/8" od	1 1/8" od **	44.6	37.2	17.1	272.0
538BPX060000	208/230-3-60	27.00	45	65'	150'	200'	3/8" od	1 1/8" od **	44.6	37.2	17.1	272.0
538BEX060000	460-3-60	15.00	25	65'	150'	200'	3/8" od	1 1/8" od **	44.6	37.2	17.1	272.0
38CG-018-301	208/230-3-60	0.80	15	49'	49'	98'	1/4" od	1/2" od	35.4	25.2	9.88	143.0
38CG-024-301	208/230-3-60	0.80	15	66'	66'	131'	3/8" od	5/8" od	35.4	25.2	9.88	143.0
38CG-030-301	208/230-3-60	0.80	15	33'	33'	98'	3/8" od	5/8" od	43.3	25.2	12.6	165.0
38CS-018-301	208/230-3-60	11.50	25	49'	49'	98'	1/4" od	1/2" od	35.4	25.2	9.88	143.0
38CS-024-301	208/230-3-60	17.00	35	66'	66'	131'	3/8" od	5/8" od	35.4	25.2	9.88	143.0
38CS-030-301	208/230-3-60	17.00	40	33'	33'	98'	3/8" od	5/8" od	43.3	25.2	12.6	165.0
38SC-030-301	208/230-3-60	0.8 x 2	15 x 2	33'	33'	98'	3/8" od	5/8" od	43.3	48.8	12.6	330.0
38SB-030-301	208/230-3-60	17.0 x 2	40 x 2	33'	33'	98'	3/8" od	5/8" od	43.3	48.8	12.6	330.0

Notes:

1)Vert Lift is Fan Coil above Condenser. Vert Drop is Fan Coil below Condenser

2) MCA and MOCP are for both indoor and outdoor units (system) and are listed in the outdoor unit.

3) Two MCA & MOCP ratings are shown for units with separate unit and heater circuits. The first value applies to unit circuit the second applies to the heater circuit.

Legend

* Valve connection size is 3/4". Recommended line size is 7/8".

** Valve connection size is 7/8". Recommended line size is 1 1/8".

MCA = Minimum Circuit Amps

MOCP = Maximum Overcurrent Protection Amps

01/09/02

Application

Condenser Only Ratings – Section 12

ANX

JNX

Condenser Only Ratings

SST (F)		Air Temperature Entering Condenser (F)							
		55	65	75	85	95	105	115	125
538ANX018									
30	TCG	19.7	18.0	16.4	14.8	13.3	11.8	10.4	9.0
	SDT	77.6	86.9	96.4	106.0	115.8	125.6	135.5	146.2
	KW	1.1	1.2	1.3	1.4	1.4	1.5	1.5	1.5
35	TCG	22.1	20.3	18.6	16.9	15.2	13.7	12.1	10.5
	SDT	78.8	87.8	97.1	106.5	116.1	125.8	135.6	146.9
	KW	1.1	1.2	1.3	1.4	1.5	1.6	1.6	1.6
40	TCG	24.7	22.8	21.0	19.1	17.4	15.6	14.0	12.0
	SDT	80.3	89.1	98.2	107.3	116.7	126.2	135.9	148.0
	KW	1.1	1.3	1.4	1.5	1.6	1.6	1.7	1.7
45	TCG	27.5	25.4	23.4	21.5	19.6	17.8	16.0	13.7
	SDT	82.1	90.8	99.6	108.6	117.7	127.0	136.4	149.3
	KW	1.1	1.3	1.4	1.5	1.6	1.7	1.8	1.8
50	TCG	30.4	28.2	26.0	24.0	22.0	20.0	18.1	15.5
	SDT	84.3	92.8	101.5	110.2	119.1	128.1	137.3	150.8
	KW	1.1	1.3	1.4	1.5	1.7	1.8	1.8	1.9
55	TCG	33.5	31.1	28.8	26.6	24.4	22.3	20.3	17.4
	SDT	86.7	95.1	103.6	112.2	120.9	129.7	138.6	152.6
	KW	1.1	1.3	1.4	1.6	1.7	1.8	1.9	2.0
	538ANX024								
30	TCG	22.5	21.4	20.3	19.3	17.8	16.5	15.2	14.1
	SDT	78.2	87.6	97.1	106.7	120.2	133.9	147.0	159.7
	KW	1.3	1.4	1.6	1.8	2.0	2.4	2.8	3.2
35	TCG	25.0	23.8	22.6	21.5	19.8	18.3	17.0	15.7
	SDT	79.0	88.2	97.6	107.2	121.7	135.6	148.8	161.6
	KW	1.3	1.4	1.6	1.7	2.1	2.4	2.8	3.3
40	TCG	27.6	26.4	25.1	23.8	21.9	20.3	18.8	17.4
	SDT	80.0	89.1	98.3	108.1	123.3	137.4	150.7	163.6
	KW	1.3	1.4	1.6	1.7	2.1	2.4	2.9	3.3
45	TCG	30.4	29.0	27.7	26.3	24.1	22.3	20.7	19.2
	SDT	81.4	90.3	99.5	109.4	125.1	139.2	152.6	165.6
	KW	1.3	1.4	1.6	1.8	2.1	2.5	2.9	3.4
50	TCG	33.3	31.9	30.4	28.9	26.5	24.5	22.7	21.1
	SDT	83.1	91.9	101.0	110.9	126.9	141.1	154.6	167.6
	KW	1.3	1.4	1.6	1.8	2.1	2.5	3.0	3.5
55	TCG	36.4	34.8	33.3	31.6	29.0	26.8	24.9	23.1
	SDT	85.1	93.9	102.8	112.7	128.8	143.1	156.6	169.6
	KW	1.3	1.4	1.6	1.8	2.2	2.5	3.0	3.5
	538ANX030								
30	TCG	28.0	26.7	25.4	24.1	22.9	21.6	20.5	18.9
	SDT	78.2	87.7	97.3	106.9	116.6	126.4	136.2	151.1
	KW	1.6	1.7	1.9	21.3	2.4	2.6	2.9	3.5
35	TCG	30.8	29.5	28.1	26.7	25.4	24.0	22.8	20.9
	SDT	79.4	88.8	98.3	107.8	117.4	127.1	136.8	152.6
	KW	1.6	1.8	2.0	2.2	2.4	2.6	2.9	3.5
40	TCG	33.8	32.4	31.0	29.5	28.0	26.6	25.1	23.0
	SDT	80.9	90.3	99.7	109.1	118.6	128.1	137.7	154.1
	KW	1.6	1.8	2.0	2.2	2.4	2.7	3.0	3.6
45	TCG	37.0	35.5	34.0	32.4	30.8	29.2	27.7	25.1
	SDT	82.6	92.0	101.3	110.7	120.1	129.6	139.1	155.7
	KW	1.7	1.8	2.0	2.2	2.5	2.7	3.0	3.6
50	TCG	40.2	38.7	37.1	35.4	33.7	32.0	30.3	27.5
	SDT	84.6	93.9	103.2	112.5	121.9	131.3	140.7	157.5
	KW	1.7	1.9	9.0	2.3	2.5	2.8	3.0	3.7
55	TCG	43.7	42.1	40.4	38.6	36.8	35.0	33.1	30.0
	SDT	86.8	96.1	105.4	114.7	123.9	133.2	142.6	159.3
	KW	1.7	1.9	2.1	2.3	2.5	2.8	3.1	3.7

Legend
TCG - Gross Cooling Capacity 1000 BTUH/HR
SDT - Saturated Temperature Leaving Compressor Deg F
KW - Total Power
SST - Saturated Temperature Entering Compressor Deg F

Data Based On Computer Model

Condenser Only Ratings

SST (F)		Air Temperature Entering Condenser (F)							
		55	65	75	85	95	105	115	125
	538ANX036								
30	TCG	33.6	32.1	30.5	28.7	25.7	23.1	20.6	18.3
	SDT	80.9	90.2	99.6	110.2	127.2	141.4	154.4	166.5
	KW	1.8	2.0	2.3	2.6	3.1	3.6	4.1	4.6
35	TCG	36.9	35.2	33.6	31.6	28.3	25.5	22.9	20.3
	SDT	82.7	92.0	101.3	111.9	129.1	143.5	156.6	168.9
	KW	1.8	2.0	2.3	2.6	3.2	3.7	4.2	4.7
40	TCG	40.4	38.6	36.8	34.7	31.1	28.0	25.2	22.4
	SDT	84.8	94.0	103.2	113.8	131.2	145.6	158.9	171.2
	KW	1.9	2.1	2.3	2.6	3.2	3.8	4.3	4.8
45	TCG	44.0	42.1	40.1	37.9	34.0	30.7	27.6	24.7
	SDT	87.1	96.2	105.4	115.9	133.3	147.9	161.2	173.6
	KW	1.9	2.1	2.4	2.7	3.3	3.9	4.4	5.0
50	TCG	47.8	45.8	43.7	41.3	37.1	33.6	30.2	27.1
	SDT	89.6	98.7	107.8	118.1	135.6	150.2	163.5	176.0
	KW	1.9	2.2	2.4	2.7	3.4	4.0	4.5	5.1
55	TCG	51.9	49.7	47.4	44.9	40.4	36.5	33.0	29.6
	SDT	92.2	101.2	110.3	120.5	137.8	152.5	165.9	178.4
	KW	2.0	2.2	2.5	2.8	3.4	4.0	4.6	5.3
	538ANX048								
30	TCG	50.6	48.2	46.8	43.2	39.3	35.6	32.0	28.6
	SDT	78.9	88.1	97.5	107.3	121.9	135.6	148.4	160.5
	KW	2.4	2.8	3.2	3.6	4.3	5.1	5.8	6.6
35	TCG	55.8	53.2	50.6	47.9	43.4	39.4	35.5	31.8
	SDT	80.0	89.1	98.3	108.2	123.5	137.4	150.3	162.5
	KW	2.4	2.8	3.2	3.6	4.4	5.2	6.0	6.7
40	TCG	61.3	58.6	55.8	52.7	47.8	43.4	39.2	38.2
	SDT	81.3	90.3	99.5	109.5	125.2	139.2	152.2	164.5
	KW	2.4	2.8	3.2	3.6	4.5	5.3	6.1	6.9
45	TCG	67.1	65.2	61.2	57.9	52.4	47.7	43.2	38.8
	SDT	83.0	91.9	101.0	111.0	127.0	141.1	154.1	166.5
	KW	2.5	2.8	3.2	3.6	4.5	5.3	6.2	7.1
50	TCG	73.2	70.1	66.9	63.3	57.4	52.2	47.3	42.6
	SDT	85.0	93.8	102.7	112.7	128.9	143.0	156.1	168.5
	KW	2.5	2.8	3.2	3.7	4.6	5.4	6.3	7.2
55	TCG	79.8	76.3	72.9	69.0	62.6	57.0	51.7	46.7
	SDT	87.1	95.8	104.7	114.6	130.8	145.0	158.2	170.6
	KW	2.5	2.9	3.3	3.7	4.6	5.5	6.4	7.4
	538ANX060								
30	TCG	59.3	56.8	54.2	51.5	48.7	45.8	42.8	38.8
	SDT	81.5	90.3	99.3	108.5	117.8	127.2	136.8	149.1
	KW	3.4	3.7	4.0	4.4	4.9	5.3	5.8	6.5
35	TCG	65.3	62.6	59.8	57.0	54.0	50.9	47.8	43.1
	SDT	82.8	91.4	100.2	109.3	118.4	127.8	137.3	150.6
	KW	3.4	3.7	4.1	4.5	4.9	5.4	5.9	6.7
40	TCG	71.7	68.8	65.9	62.8	59.6	56.4	53.0	47.6
	SDT	84.4	92.8	101.4	110.4	119.4	128.6	137.9	152.2
	KW	3.5	3.8	4.1	4.5	4.9	5.4	5.9	6.8
45	TCG	78.5	75.4	72.2	68.9	65.5	62.0	58.5	52.4
	SDT	86.2	94.4	103.0	111.8	120.7	129.8	139.0	153.9
	KW	3.5	3.8	4.2	4.6	5.0	5.5	6.0	6.9
50	TCG	85.8	82.4	78.9	75.3	71.7	68.0	64.2	57.5
	SDT	88.3	96.4	104.9	113.5	122.4	131.3	140.4	156.7
	KW	3.6	3.9	4.2	4.6	5.1	5.6	6.1	7.1
55	TCG	93.5	89.8	86.0	82.1	78.2	74.2	70.2	62.9
	SDT	90.6	98.6	107.0	115.5	124.3	133.1	142.1	157.5
	KW	3.7	4.0	4.3	4.7	5.2	5.7	6.2	7.2

Legend
TCG - Gross Cooling Capacity 1000 BTUH/HR
SDT - Saturated Temperature Leaving Compressor Deg F
KW - Total Power
SST - Saturated Temperature Entering Compressor Deg F

Data Based On Computer Model

01/10/02

Performance Data

CONDENSER-ONLY RATINGS

SST (F)		AIR TEMPERATURE ENTERING CONDENSER (F)							
		55	65	75	85	95	105	115	125
538JNX018									
30	TCG	17.8	16.9	16.0	15.1	14.3	13.4	12.6	12.0
	SDT	78.8	88.3	98.0	107.7	117.5	127.4	137.3	145.5
	kW	1.07	1.18	1.30	1.44	1.59	1.75	1.94	2.12
35	TCG	19.6	18.7	17.8	16.8	15.9	15.0	14.1	13.3
	SDT	79.8	89.4	99.0	108.7	118.4	128.2	138.1	147.9
	kW	1.08	1.19	1.32	1.46	1.61	1.78	1.97	2.19
40	TCG	21.5	20.6	19.6	18.6	17.6	16.6	15.7	14.8
	SDT	81.1	90.7	100.2	109.9	119.5	129.3	139.0	148.9
	kW	1.08	1.19	1.32	1.46	1.61	1.78	1.97	2.19
45	TCG	23.5	22.6	21.6	20.5	19.5	18.4	17.4	16.3
	SDT	82.7	92.1	101.6	111.2	120.8	130.5	140.2	150.0
	kW	1.09	1.20	1.32	1.47	1.63	1.80	1.99	2.21
50	TCG	25.7	24.7	23.6	22.5	21.4	20.3	19.1	18.0
	SDT	84.4	93.8	103.2	112.8	122.3	131.9	141.6	151.3
	kW	1.10	1.21	1.33	1.48	1.64	1.82	2.01	2.23
55	TCG	27.9	26.9	25.8	24.6	23.4	22.2	21.0	19.8
	SDT	86.2	95.6	105.0	114.5	124.0	133.6	143.1	152.8
	kW	1.10	1.22	1.35	1.49	1.66	1.84	2.03	2.26
539JNX024									
30	TCG	23.8	22.7	21.5	20.3	19.0	17.7	16.3	14.8
	SDT	80.4	89.7	99.1	108.5	118.0	127.5	137.0	146.6
	kW	1.37	1.53	1.71	1.91	2.12	2.34	2.56	2.79
35	TCG	26.2	25.0	23.7	22.4	21.1	20.1	18.2	16.7
	SDT	82.1	91.3	100.6	110.0	119.4	126.4	138.2	147.6
	kW	1.37	1.53	1.72	1.92	2.14	2.31	2.60	2.84
40	TCG	28.7	27.4	26.0	24.7	23.3	21.8	20.3	18.7
	SDT	84.0	93.1	102.4	111.7	121.0	130.4	139.7	149.0
	kW	1.38	1.54	1.73	1.94	2.16	2.39	2.64	2.89
45	TCG	31.3	29.9	28.5	27.0	25.5	24.0	22.4	20.7
	SDT	86.2	95.2	104.3	113.6	122.8	132.1	141.4	150.6
	kW	1.39	1.56	1.74	1.96	2.18	2.42	2.67	2.94
50	TCG	34.1	32.6	31.1	29.5	27.9	26.3	24.6	22.9
	SDT	88.5	97.4	106.5	115.6	124.8	134.0	143.2	152.4
	kW	1.41	1.57	1.76	1.98	2.21	2.45	2.71	2.99
55	TCG	37.0	35.4	33.8	32.2	30.5	28.7	26.9	25.1
	SDT	91.1	99.9	108.7	117.8	126.9	136.0	145.2	154.3
	kW	1.42	1.59	1.78	2.00	2.23	2.49	2.75	3.04
538JNX030									
30	TCG	28.2	27.1	25.8	24.5	23.1	21.7	20.3	18.8
	SDT	78.7	87.9	97.5	107.1	116.8	126.5	136.3	146.1
	kW	1.53	1.69	1.89	2.10	2.34	2.59	2.86	3.14
35	TCG	31.0	29.8	28.4	27.0	25.6	24.1	22.6	21.1
	SDT	80.3	89.4	98.8	108.3	117.8	127.4	137.0	146.2
	kW	1.57	1.73	1.93	2.14	2.38	2.63	2.90	3.17
40	TCG	33.9	32.7	31.2	29.7	28.2	26.6	25.0	23.3
	SDT	82.2	91.2	100.5	109.9	119.3	128.7	138.1	147.6
	kW	1.62	1.78	1.97	2.19	2.43	2.68	2.95	3.25
45	TCG	37.2	35.7	34.1	32.5	30.9	29.2	27.5	25.8
	SDT	84.2	93.2	102.5	111.8	121.1	130.4	139.7	149.0
	kW	1.67	1.84	2.03	2.25	2.49	2.74	3.02	3.32
50	TCG	41.0	38.9	37.3	35.5	33.8	32.0	30.1	28.3
	SDT	87.1	95.5	104.7	113.9	123.1	132.3	141.5	150.7
	kW	1.74	1.90	2.09	2.31	2.55	2.81	3.09	3.39
55	TCG	44.2	42.4	40.5	38.7	36.8	34.8	32.9	30.9
	SDT	88.8	97.9	107.0	116.1	126.3	134.4	143.5	152.6
	kW	1.79	1.96	2.15	2.38	2.63	2.89	3.17	3.48

See Legend on next page. Click here to view the next page of condenser-only performance data.

CONDENSER-ONLY RATINGS (cont)

SST (F)		AIR TEMPERATURE ENTERING CONDENSER (F)							
		55	65	75	85	95	105	115	125
538JNX036									
30	TCG	37.4	34.8	32.2	29.7	27.0	24.6	22.0	19.4
	SDT	88.0	95.5	103.4	111.4	119.6	127.9	137.0	146.4
	kW	2.31	2.45	2.59	2.72	2.81	2.89	2.97	3.01
35	TCG	41.5	38.7	35.9	33.1	30.4	27.7	25.1	22.4
	SDT	91.2	98.5	106.2	114.0	122.0	130.2	138.6	147.3
	kW	2.42	2.56	2.71	2.84	2.96	3.06	3.15	3.21
40	TCG	45.7	42.8	39.8	36.8	33.9	31.0	28.2	25.5
	SDT	92.8	101.8	109.3	116.9	124.7	132.7	140.8	149.1
	kW	2.48	2.68	2.84	2.99	3.12	3.23	3.33	3.42
45	TCG	50.1	47.3	44.0	40.8	37.7	34.6	31.6	28.7
	SDT	96.6	105.4	112.6	120.6	127.6	135.4	143.3	151.4
	kW	2.60	2.81	2.98	3.14	3.28	3.41	3.52	3.63
50	TCG	54.7	53.2	48.4	45.0	41.6	38.4	35.1	32.0
	SDT	100.8	100.6	116.1	123.2	130.7	138.3	146.1	154.0
	kW	2.73	2.86	3.12	3.29	3.45	3.59	3.72	3.84
55	TCG	59.6	58.2	53.1	49.5	45.8	42.3	38.9	35.5
	SDT	105.2	110.2	119.8	126.8	134.0	141.4	149.0	156.7
	kW	2.87	3.00	3.27	3.45	3.62	3.78	3.92	4.06
538JNX048									
30	TCG	46.5	44.4	42.5	40.3	38.1	35.7	33.5	30.9
	SDT	78.5	88.4	97.5	107.1	116.8	126.5	135.7	145.6
	kW	2.54	2.83	3.13	3.49	3.87	4.28	4.69	5.16
35	TCG	51.1	49.0	46.7	44.5	42.1	39.6	37.1	34.5
	SDT	79.9	89.2	98.6	108.2	117.7	127.3	137.0	146.6
	kW	2.60	2.87	3.19	3.54	3.93	4.35	4.79	5.26
40	TCG	55.9	53.6	51.3	48.8	46.3	43.7	41.0	38.3
	SDT	81.5	90.7	100.1	109.6	199.0	128.6	138.1	147.7
	kW	2.67	2.94	3.25	3.62	4.01	4.43	4.87	5.36
45	TCG	61.1	58.6	56.1	53.4	50.8	48.0	45.2	42.2
	SDT	83.4	92.5	101.8	111.1	120.6	130.0	139.5	149.0
	kW	2.75	3.02	3.33	3.69	4.09	4.52	4.97	5.47
50	TCG	66.5	63.8	61.1	58.3	55.4	52.5	49.5	46.4
	SDT	85.5	94.5	103.7	112.9	122.3	131.6	141.0	150.5
	kW	2.83	3.11	3.42	3.78	4.18	4.62	5.08	5.59
55	TCG	72.2	69.3	66.4	63.4	60.4	57.2	54.0	50.7
	SDT	87.7	96.7	105.7	114.9	124.2	133.5	142.8	152.1
	kW	2.93	3.21	3.52	3.88	4.29	4.73	5.19	5.71
538JNX060									
30	TCG	55.6	53.3	51.0	48.5	46.0	43.4	40.7	38.1
	SDT	80.3	89.5	98.9	108.3	117.8	127.4	137.0	146.0
	kW	3.22	3.52	3.88	4.29	4.72	5.19	5.71	6.22
35	TCG	61.0	58.5	56.0	53.4	50.7	47.9	45.0	42.6
	SDT	82.1	91.2	100.4	109.7	119.1	128.6	138.1	146.3
	kW	3.32	3.62	3.98	4.39	4.83	5.30	5.82	6.30
40	TCG	66.7	64.0	61.3	58.5	55.6	53.5	49.6	45.2
	SDT	84.1	93.1	102.2	111.4	120.8	127.4	139.6	152.5
	kW	3.44	3.74	4.10	4.50	4.95	5.29	5.96	6.75
45	TCG	72.8	69.9	66.9	63.9	60.8	57.6	54.4	49.6
	SDT	86.4	95.2	104.2	113.3	122.5	131.9	141.2	154.3
	kW	3.57	3.87	4.22	4.64	5.08	5.57	6.10	6.92
50	TCG	79.2	76.0	72.8	69.6	66.3	62.9	59.5	54.3
	SDT	88.8	97.5	106.4	115.4	124.5	133.7	142.8	156.2
	kW	3.71	4.02	4.36	4.78	5.23	5.72	6.24	7.11
55	TCG	86.0	82.6	79.1	75.6	72.1	68.4	64.7	59.1
	SDT	91.4	100.0	108.7	117.6	126.7	135.7	144.9	158.2
	kW	3.87	4.18	4.52	4.94	5.39	5.89	6.42	7.30

LEGEND

TCG — Gross Cooling Capacity (1000 Btuh)
SDT — Saturated Temperature Leaving Compressor (F)
kW — Total Power (kW)
SST — Saturated Temperature Entering Compressor (F)

Click here to view previous page of condenser-only performance data.

Duct Free Systems - Performance Data & Expanded Ratings

Cooling Only High Wall

Indoor Unit	Outdoor Unit	Net Cooling Capacity	System Index Table #
619EAX0090E	538CAX009000	8,500	1
619EAX0120E	538CAX012000	11,000	n/a
619ENX0120E	538CNX012000	11,600	2
619ENX0180E	538ANX018000	17,300	3
	538JNX018000	16,200	n/a
619ENX0240E	538JNX018000	17,600	43
	538ANX024000	22,600	4
	538JNX024000	22,600	44

Cooling Only Under Ceiling

Indoor Unit	Outdoor Unit	Net Cooling Capacity	System Index Table #
619CNX0240E *	538ANX018000	18,000	5
	538JNX018000	18,000	45
619CNX0240E	538ANX024000	22,800	6
	583JNX024000	23,000	46
619CNX0360E	538ANX030000	30,000	7
	538JNX030000	29,000	47
619CNX0360E	538ANX, APX, AEX036000	34,000	8
	538JNX036000	34,000	48
619CNX0480E	538ANX, APX, AEX048000	47,000	9
	538JNX048000	45,500	49
619CNX0600E	538ANX, APX, AEX060000	58,000	10
	538JNX060000	58,500	50

Cooling Only Cassette

Indoor Unit	Outdoor Unit	Net Cooling Capacity	System Index Table #
619FNX0240E	538ANX018000	18,300	11
	538JNX018000	17,800	51
619FNX0360E	538ANX024000	24,000	12
	538JNX024000	24,000	52
	538ANX030000	30,000	13
	538JNX030000	29,000	53
	538ANX, APX, AEX036000	33,000	14
	538JNX036000	34,400	54

Cooling Only Console

Indoor Unit	Outdoor Unit	Net Cooling Capacity	System Index Table #
40CG-018---301RM	38CG-018---301	18,000	n/a
40CG-018---301RM	38CG-024---301	23,400	n/a
40CG-018---301RM	38CG-030---301	30,000	n/a

Cooling Only Console Multi Split

Indoor Unit	Outdoor Unit	Net Cooling Capacity	System Index Table #
40CG-018---301RM	38SC-030---3	30,000	n/a

Legend:

* The 619CNX0240E must be field configured to an 018 unit by changing the motor speed fan tap plug.
Refer to Installation Instructions for more details.

Heat Pump High Wall

Indoor Unit	Outdoor Unit	Net Cooling Capacity	Net Heating Capacity	System Index Table #
619EAX0090W	538DAX0090000	8,700	9,000	15C & H
619ENX0120H	538DNX012000	11,100	11,700	16C & H
619ENX0180H	538DNX018000	17,300	16,400	17C & H
619ENX0240H	538DNX024000	23,000	21,000	18C & H

Heat Pump Under Ceiling

Indoor Unit	Outdoor Unit	Net Cooling Capacity	Net Heating Capacity	System Index Table #
619CNX0240W	538BNX018000	19,000	17,000	19C & H
	538BNX024000	24,000	22,600	20C & H
619CNX0360W	538BNX030000	30,000	28,000	21C & H
	538BNX036000	34,600	33,000	22C & H
	538BPX/BEX036000	36,000	34,400	23C & H
619CNX0480W	538BNX, BPX, BEX048000	48,000	45,500	24C & H
619CNX0600W	538BNX, BPX, BEX060000	58,000	57,500	25C & H

Heat Pump Cassette

Indoor Unit	Outdoor Unit	Net Cooling Capacity	Net Heating Capacity	System Index Table #
619FNX0240W	538BNX018000	18,000	17,600	26C & H
619FNX0360W	538BNX024000	25,000	23,800	27C & H
	538BNX030000	29,000	27,000	28C & H
619FNX0480W	538BNX036000	33,000	33,000	29C & H
	538BPX/BEX036000	34,400	34,000	30C & H

Multi Split 2 Ton 538SNX

Indoor Section			Net Cooling Capacity	System Index Table #
Model	Circuit	Qty		
619FNX0240E	A	2	23,000	31
619CNX0240E *	A	2	24,000	32
619ENX0180E	A	2	23,000	33
619FNX0240E	A	1	23,000	34
619CNX0240E *	A	1		
619FNX0240E	A	1	23,000	35
619ENX0180E	A	1		
619CNX0240E *	A	1	23,000	36
619ENX0180E	A	1		

Heat PumpConsole

Indoor Unit	Outdoor Unit	Net Cooling Capacity	Net Heating Capacity	System Index Table #
40CS-018---301RM	38CS-018---301	18,000	18,000	n/a
40CS-024---301RM	38CS-024---301	23,400	24,000	n/a
40CS-030---301RM	38CS-030---301	30,000	31,000	n/a

Cooling Only Console Multi Split

Indoor Unit	Outdoor Unit	Net Cooling Capacity	Net Heating Capacity	System Index Table #
40CS-030---301RM	38SB-030---3	30,000	31,000	n/a

Click here to view Multi Split 4 Ton 538SNX048

Note:

1) Rating conditions are at high speed, 80 deg f db, 67deg f wb air entering fan coil and 95 deg f db air entering condenser
2) When two tables are listed add together the capacity data shown in each table for the total system capacity.
This procedure is also appropriate for determining total system power and total compressor power.
3) If a system consists of 2 fan coil units on each circuit (538SNX048) and one fan coil unit is turned off, the resulting system capacity will change.
For example, for a system with 2 Cassettes and 2 Under Ceiling fan coils and all fan coils turned on and available for cooling system capacities are determined using cooling capacity tables 43 and 44 . If one of the Cassettes is turned off (not available for operation) the new system capacity would be derived using tables 44 and 50.
4) Tables 49, 50, & 51 show system performance with one fan coil running on a circuit designed for two fan coils. Using any of these units by themselves as the only fan ciol on a circuit is not recommended.
5) Performance data is provided for reference only.

Rev "A"
01/10/02

Duct Free Systems - Performance Data & Expanded Ratings

Multi Split 4 Ton 538SNX048

Click here to return to System Index Table.

Indoor Section			Net	System
Model	Circuit	Qty	Cooling Capacity	Index Table #
619ENX0180E	A	2	46,000	33
619ENX0180E	B	2		33
619ENX0240E	A	1	45,800	33
619ENX0180E	B	2		40
619ENX0240E	A	1	45,600	40
619ENX0240E	B	1		40
619CNX0240E *	A	2	48,000	32
619CNX0240E *	B	2		32
619CNX0240E	A	1	46,800	32
619CNX0240E *	B	2		41
619CNX0240E	A	1	45,600	41
619CNX0240E	B	1		41
619FNX0240E	A	2	46,000	31
619FNX0240E	B	2		31
619FNX0240E	A	2	47,000	31
619FNX0360E	B	1		42
619FNX0360E	A	1	48,000	42
619FNX0360E	B	1		42
619ENX0180E	A	2	46,000	33
619ENX0180E	B	1		36
619CNX0240E *	B	1		
619ENX0180E	A	2	46,000	33
619ENX0180E	B	1		35
619FNX0240E	B	1		
619ENX0180E	A	2	47,000	32
619CNX0240E *	B	2		33
619ENX0180E	A	2	46,000	31
619FNX0240E	B	2		33
619ENX0180E	A	2	46,000	33
619CNX0240E *	B	1		34
619FNX0240E	B	1		
619CNX0240E *	A	2	47,000	32
619CNX0240E *	B	1		36
619ENX0180E	B	1		
619CNX0240E *	A	2	47,000	32
619CNX0240E *	B	1		34
619FNX0240E	B	1		
619CNX0240E *	A	2	47,000	31
619FNX0240E	B	2		32
619CNX0240E *	A	2	47,000	32
619FNX0240E	B	1		35
619ENX0180E	B	1		
619FNX0240E	A	2	46,000	31
619FNX0240E	B	1		35
619ENX0180E	B	1		
619FNX0240E	A	2	46,000	31
619FNX0240E	B	1		34
619CNX0240E *	B	1		
619FNX0240E	A	2	46,000	31
619CNX0240E *	B	1		36
619ENX0180E	B	1		
619ENX0180E	A	2	47,000	33
619FNX0360E	B	1		42
619CNX0240E *	A	2	48,000	32
619FNX0360E	B	1		42
619CNX0240E *	A	2	46,800	32
619ENX0240E	B	1		40
619CNX0240E *	A	1	45,800	34
619FNX0240E	A	1		40
619ENX0240E	B	1		
619FNX0240E	A	2	45,800	31
619CNX0240E	B	1		41
619ENX0240E	A	1	46,800	40
619FNX0360E	B	1		42
619ENX0240E	A	1	45,600	40
619CNX0240E	B	1		41

COOLING CAPACITIES

SYSTEM 1* — HIGH WALL SYSTEM (538CAX009 WITH 619EAX009)

Temp (F) Air Entering Condenser (Edb)		Air Entering Evaporator – Cfm/BF											
		184/0.08				200/0.09				215/0.10			
		Air Entering Evaporator – Ewb (F)											
		57	62	67	72	57	62	67	72	57	62	67	72
55	TCG	7.41	7.46	7.72	7.87	7.41	7.44	7.61	7.76	7.45	7.71	7.52	7.66
	SHG	7.10	5.75	4.78	3.88	7.18	5.79	4.74	3.85	7.30	6.09	4.70	3.82
	TC	7.33	7.38	7.65	7.80	7.33	7.36	7.53	7.68	7.37	7.63	7.43	7.57
	kW	0.597	0.597	0.608	0.613	0.598	0.598	0.605	0.611	0.601	0.611	0.603	0.609
	CMP	0.493	0.494	0.505	0.511	0.493	0.493	0.500	0.507	0.494	0.505	0.496	0.503
	LDB	43.5	50.5	55.5	60.2	46.1	52.7	57.7	62.0	47.9	53.3	59.5	63.4
	LWB	39.6	46.4	52.7	59.1	41.3	47.9	54.2	60.5	42.4	48.5	55.4	61.6
65	TCG	7.48	7.80	8.17	8.46	7.60	7.79	8.18	8.34	7.67	8.06	8.09	8.24
	SHG	7.29	6.14	5.10	4.13	7.52	6.20	5.15	4.10	7.65	6.53	5.12	4.07
	TC	7.40	7.73	8.10	8.38	7.53	7.71	8.10	8.26	7.59	7.97	8.00	8.16
	kW	0.649	0.661	0.677	0.690	0.656	0.662	0.679	0.686	0.660	0.677	0.677	0.683
	CMP	0.547	0.559	0.574	0.587	0.552	0.558	0.574	0.581	0.554	0.570	0.570	0.576
	LDB	42.5	48.5	53.9	58.9	44.4	50.8	55.8	60.8	46.4	51.3	57.6	62.3
	LWB	39.4	45.6	51.7	58.0	40.8	47.1	53.1	59.5	41.9	47.8	54.4	60.7
75	TCG	7.54	7.94	8.46	8.58	7.73	8.05	8.48	8.56	7.90	8.12	8.49	8.82
	SHG	7.48	6.37	5.34	4.18	7.73	6.57	5.41	4.20	7.90	6.73	5.47	4.34
	TC	7.47	7.87	8.38	8.50	7.65	7.97	8.40	8.48	7.81	8.04	8.40	8.73
	kW	0.715	0.728	0.749	0.753	0.724	0.734	0.752	0.754	0.733	0.738	0.754	0.770
	CMP	0.613	0.625	0.647	0.651	0.619	0.629	0.647	0.650	0.626	0.631	0.648	0.663
	LDB	41.5	47.3	52.7	58.7	43.5	49.0	54.5	60.3	45.3	50.5	56.1	61.1
	LWB	39.3	45.2	51.0	57.8	40.5	46.5	52.5	59.1	41.4	47.7	53.6	59.7
85	TCG	7.44	7.90	8.40	8.87	7.67	8.05	8.50	8.91	7.80	8.16	8.56	9.17
	SHG	7.44	6.45	5.36	4.31	7.67	6.70	5.50	4.37	7.80	6.93	5.61	4.53
	TC	7.37	7.83	8.33	8.79	7.59	7.97	8.42	8.83	7.72	8.07	8.48	9.08
	kW	0.790	0.801	0.816	0.837	0.803	0.810	0.822	0.841	0.801	0.817	0.826	0.859
	CMP	0.688	0.698	0.713	0.735	0.699	0.704	0.717	0.737	0.695	0.710	0.720	0.752
	LDB	41.7	46.9	52.5	58.0	43.7	48.4	54.1	59.5	45.7	49.6	55.4	60.3
	LWB	39.5	45.3	51.2	57.2	40.6	46.6	52.4	58.5	41.6	47.6	53.5	59.2
95	TCG	6.92	7.51	8.33	8.85	7.16	7.82	8.47	8.95	7.47	7.95	8.59	9.14
	SHG	6.92	6.29	5.38	4.32	7.16	6.64	5.57	4.41	7.47	6.90	5.73	4.55
	TC	6.84	7.44	8.26	8.78	7.08	7.74	8.39	8.87	7.38	7.86	8.50	9.05
	kW	0.860	0.878	0.899	0.917	0.873	0.884	0.907	0.924	0.880	0.894	0.915	0.939
	CMP	0.757	0.776	0.796	0.815	0.768	0.780	0.802	0.819	0.774	0.787	0.809	0.832
	LDB	44.4	47.7	52.4	57.9	46.2	48.7	53.8	59.3	47.2	49.7	54.9	60.2
	LWB	41.0	46.3	51.3	57.2	41.9	47.1	52.5	58.4	42.4	48.0	53.5	59.2
105	TCG	6.44	6.95	7.89	8.77	6.63	7.13	8.22	8.85	6.89	7.25	8.33	8.95
	SHG	6.44	6.02	5.21	4.30	6.63	6.32	5.48	4.39	6.89	6.57	5.66	4.49
	TC	6.37	6.87	7.82	8.69	6.55	7.05	8.14	8.77	6.81	7.16	8.25	8.86
	kW	0.934	0.947	0.986	1.01	0.948	0.956	0.992	1.01	0.957	0.964	1.00	1.02
	CMP	0.831	0.844	0.883	0.909	0.843	0.852	0.887	0.909	0.851	0.858	0.895	0.914
	LDB	46.9	49.1	53.3	58.1	48.7	50.2	54.2	59.4	49.7	51.2	55.2	60.4
	LWB	42.2	47.6	52.3	57.4	43.2	48.6	53.0	58.6	43.7	49.4	53.9	59.5
115	TCG	5.96	6.26	7.28	8.42	6.15	6.39	7.42	8.61	6.41	6.50	7.53	8.72
	SHG	5.96	5.71	4.94	4.16	6.15	5.98	5.15	4.31	6.41	6.22	5.33	4.42
	TC	5.89	6.19	7.21	8.34	6.07	6.31	7.34	8.53	6.33	6.41	7.44	8.64
	kW	1.02	1.02	1.06	1.10	1.03	1.03	1.07	1.11	1.04	1.04	1.08	1.12
	CMP	0.913	0.920	0.958	1.00	0.924	0.927	0.966	1.01	0.930	0.934	0.973	1.02
	LDB	49.4	50.7	54.7	58.7	51.0	51.8	55.8	59.8	51.9	52.7	56.7	60.7
	LWB	43.5	49.3	53.6	58.1	44.3	50.1	54.6	59.0	44.7	50.9	55.4	59.9
125	TCG	5.43	5.67	6.45	7.60	5.68	5.79	6.55	7.72	5.89	5.92	6.65	7.81
	SHG	5.43	5.43	4.60	3.86	5.68	5.69	4.79	3.98	5.89	5.91	4.97	4.09
	TC	5.36	5.59	6.37	7.53	5.60	5.71	6.47	7.64	5.81	5.83	6.56	7.73
	kW	1.11	1.11	1.15	1.19	1.12	1.12	1.16	1.20	1.13	1.13	1.16	1.21
	CMP	1.00	1.00	1.04	1.09	1.01	1.01	1.05	1.10	1.02	1.02	1.06	1.11
	LDB	52.2	52.2	56.5	60.3	53.3	53.2	57.5	61.4	54.2	54.1	58.3	62.2
	LWB	44.9	50.6	55.3	59.6	45.4	51.4	56.2	60.6	45.8	52.0	56.9	61.3

Rating condition.

Not recommended for long-term operation.

LEGEND

BF – Bypass Factor
CMP – Compressor
Edb – Entering Dry Bulb
Ewb – Entering Wet Bulb
kW – Total Power
LDB – Leaving Dry Bulb
LWB – Leaving Wet Bulb
SHG – Gross Sensible Capacity (1000 Btu/hour)
TC – Total Net Cooling Capacity (1000 Btu/hour)
TCG – Gross Cooling Capacity (1000 Btu/hour)

*Click here to view Systems Index Table.

NOTES:
1. Direct interpolation is permissible. Do not extrapolate.
2. The SHG is based on 80 F edb temperature of air entering indoor coil.
   Below 80 F edb, subtract (corr factor x cfm) from SHG.
   Above 80 F edb, add (corr factor x cfm) to SHG.
   Correction Factor = 1.10 x (1 ± BF) x (edb ± 80).

COOLING CAPACITIES (cont)

SYSTEM 2* — HIGH WALL SYSTEM (538CNX012 WITH 619ENX012)

Temp (F) Air Entering Condenser (Edb)		Air Entering Evaporator – Cfm/BF											
		245/0.12				280/0.14				302/0.15			
		Air Entering Evaporator – Ewb (F)											
		57	62	67	72	57	62	67	72	57	62	67	72
55	TCG	10.6	10.9	11.1	11.2	10.6	11.0	11.2	11.3	10.7	11.0	11.2	11.1
	SHG	9.99	8.37	6.81	5.53	10.2	8.55	6.94	5.58	10.4	8.61	6.98	5.54
	TC	10.5	10.8	10.9	11.1	10.5	10.9	11.0	11.1	10.6	10.9	11.0	11.0
	kW	0.742	0.750	0.752	0.756	0.747	0.756	0.759	0.761	0.752	0.758	0.761	0.760
	CMP	0.635	0.642	0.644	0.647	0.635	0.643	0.647	0.649	0.637	0.642	0.646	0.645
	LDB	42.8	48.8	54.8	59.6	46.6	52.2	57.5	62.0	48.5	54.1	59.1	63.5
	LWB	38.9	45.3	52.0	58.7	41.4	47.6	54.0	60.5	42.6	48.8	55.1	61.6
65	TCG	10.7	11.2	11.6	12.0	10.9	11.4	11.6	11.9	11.1	11.5	11.6	11.8
	SHG	10.3	8.67	7.21	5.84	10.8	9.01	7.30	5.84	11.1	9.21	7.35	5.81
	TC	10.6	11.0	11.5	11.9	10.8	11.2	11.5	11.8	11.0	11.3	11.5	11.6
	kW	0.826	0.832	0.844	0.853	0.833	0.842	0.848	0.855	0.842	0.847	0.851	0.853
	CMP	0.718	0.725	0.737	0.746	0.721	0.729	0.736	0.743	0.727	0.732	0.736	0.738
	LDB	41.5	47.7	53.2	58.4	44.9	50.7	56.3	61.1	46.5	52.2	57.9	62.6
	LWB	38.7	44.9	51.1	57.6	40.9	47.0	53.4	59.7	41.9	48.2	54.5	60.9
75	TCG	10.5	11.2	11.8	12.3	10.9	11.4	12.0	12.3	11.1	11.6	12.1	12.2
	SHG	10.3	8.85	7.38	5.95	10.9	9.27	7.65	6.01	11.1	9.55	7.78	6.03
	TC	10.4	11.1	11.7	12.2	10.8	11.3	11.9	12.2	11.0	11.5	12.0	12.1
	kW	0.911	0.924	0.938	0.950	0.923	0.933	0.948	0.954	0.931	0.941	0.954	0.955
	CMP	0.804	0.816	0.831	0.842	0.811	0.821	0.836	0.842	0.816	0.826	0.839	0.840
	LDB	41.6	47.1	52.6	58.0	44.5	49.8	55.2	60.6	46.4	51.2	56.6	62.0
	LWB	39.0	44.8	50.8	57.1	41.0	46.9	52.8	59.3	42.0	48.0	53.9	60.4
85	TCG	9.83	11.0	11.8	12.3	10.5	11.3	12.0	12.4	10.9	11.4	12.1	12.5
	SHG	9.83	8.85	7.44	5.98	10.5	9.36	7.73	6.10	10.9	9.65	7.92	6.16
	TC	9.72	10.9	11.7	12.2	10.4	11.1	11.9	12.3	10.8	11.3	12.0	12.3
	kW	1.00	1.02	1.04	1.05	1.02	1.03	1.05	1.06	1.03	1.04	1.05	1.06
	CMP	0.896	0.915	0.933	0.946	0.909	0.922	0.937	0.947	0.913	0.924	0.940	0.948
	LDB	43.4	47.1	52.4	57.9	45.8	49.6	54.9	60.3	47.0	50.9	56.2	61.6
	LWB	40.4	45.2	50.8	57.0	41.7	47.2	52.9	59.1	42.3	48.2	53.9	60.1
95	TCG	9.18	10.1	11.6	12.3	9.73	10.5	11.8	12.5	10.2	10.8	11.9	12.7
	SHG	9.18	8.38	7.39	5.96	9.73	9.03	7.75	6.17	10.2	9.42	7.94	6.28
	TC	9.07	9.95	11.5	12.2	9.61	10.4	11.7	12.4	10.0	10.6	11.6	12.5
	kW	1.10	1.12	1.15	1.17	1.12	1.13	1.16	1.18	1.13	1.14	1.17	1.19
	CMP	0.994	1.01	1.04	1.06	1.01	1.02	1.05	1.07	1.02	1.03	1.05	1.07
	LDB	45.8	48.8	52.6	57.9	48.3	50.6	54.9	60.1	49.4	51.6	56.1	61.2
	LWB	41.7	46.8	51.2	57.1	42.9	48.3	53.1	59.0	43.5	49.1	54.2	59.9
105	TCG	8.50	9.14	10.6	12.0	9.03	9.53	11.0	12.3	9.43	9.76	11.3	12.4
	SHG	8.50	7.95	6.95	5.87	9.03	8.57	7.42	6.09	9.43	8.95	7.70	6.22
	TC	8.39	9.02	10.5	11.9	8.90	9.40	10.9	12.1	9.30	9.62	11.1	12.3
	kW	1.21	1.22	1.26	1.29	1.23	1.24	1.28	1.30	1.24	1.25	1.28	1.31
	CMP	1.10	1.12	1.15	1.18	1.12	1.13	1.16	1.19	1.12	1.13	1.17	1.19
	LDB	48.4	50.5	54.2	58.3	50.6	52.1	55.9	60.3	51.6	53.1	56.9	61.4
	LWB	43.0	48.4	52.8	57.5	44.1	49.8	54.2	59.3	44.6	50.5	55.0	60.2
115	TCG	7.95	8.10	9.47	11.3	8.40	8.47	9.84	11.8	8.65	8.69	10.1	12.0
	SHG	7.95	7.47	6.47	5.56	8.40	8.08	6.93	5.90	8.65	8.44	7.21	6.09
	TC	7.84	7.99	9.36	11.2	8.27	8.34	9.72	11.6	8.51	8.55	9.92	11.9
	kW	1.33	1.34	1.37	1.41	1.35	1.35	1.39	1.43	1.36	1.36	1.40	1.44
	CMP	1.22	1.23	1.27	1.31	1.23	1.24	1.28	1.32	1.24	1.24	1.28	1.33
	LDB	50.4	52.3	56.0	59.4	52.7	53.8	57.5	60.9	54.0	54.6	58.4	61.8
	LWB	44.0	50.2	54.5	58.6	45.1	51.3	55.8	59.9	45.7	51.9	56.4	60.6
125	TCG	7.27	7.40	8.52	10.1	7.68	7.69	8.87	10.5	7.92	7.89	9.08	10.7
	SHG	7.27	7.14	6.08	5.11	7.68	7.67	6.54	5.42	7.92	7.89	6.82	5.60
	TC	7.16	7.29	8.41	9.97	7.55	7.56	8.75	10.3	7.78	7.75	8.94	10.5
	kW	1.46	1.46	1.50	1.54	1.48	1.47	1.51	1.56	1.49	1.49	1.52	1.57
	CMP	1.35	1.35	1.39	1.43	1.36	1.36	1.40	1.44	1.37	1.37	1.40	1.45
	LDB	53.0	53.5	57.5	61.2	55.1	55.1	58.8	62.5	56.2	56.3	59.6	63.3
	LWB	45.3	51.3	55.9	60.2	46.3	52.4	57.0	61.4	46.8	52.9	57.6	62.1

Rating condition.

Not recommended for long-term operation.

LEGEND

BF – Bypass Factor
CMP – Compressor
Edb – Entering Dry Bulb
Ewb – Entering Wet Bulb
kW – Total Power
LDB – Leaving Dry Bulb
LWB – Leaving Wet Bulb
SHG – Gross Sensible Capacity (1000 Btu/hour)
TC – Total Net Cooling Capacity (1000 Btu/hour)
TCG – Gross Cooling Capacity (1000 Btu/hour)

*Click here to view Systems Index Table.

NOTES:
1. Direct interpolation is permissible. Do not extrapolate.
2. The SHG is based on 80 F edb temperature of air entering indoor coil.
   Below 80 F edb, subtract (corr factor x cfm) from SHG.
   Above 80 F edb, add (corr factor x cfm) to SHG.
   Correction Factor = 1.10 x (1 ± BF) x (edb ± 80).

COOLING CAPACITIES (cont)

SYSTEM 3* — HIGH WALL SYSTEM (538ANX018 WITH 619ENX018)

Temp (F) Air Entering Condenser (Edb)		Air Entering Evaporator – Cfm/BF											
		360/0.12				414/0.13				480/0.15			
		Air Entering Evaporator – Ewb (F)											
		57	62	67	72	57	62	67	72	57	62	67	72
55	TCG	16.1	16.9	17.4	17.6	16.5	17.2	17.3	17.8	17.0	17.4	17.8	18.0
	SHG	15.2	13.0	10.7	8.63	16.0	13.3	10.8	8.76	16.8	13.9	11.3	8.91
	TC	16.0	16.8	17.3	17.5	16.4	17.1	17.2	17.6	16.8	17.2	17.7	17.8
	kW	1.01	1.02	1.02	1.03	1.02	1.03	1.03	1.03	1.03	1.04	1.04	1.04
	CMP	0.860	0.868	0.873	0.874	0.864	0.871	0.871	0.878	0.871	0.873	0.879	0.881
	LDB	41.4	47.1	52.9	58.2	44.7	50.3	56.3	60.8	48.0	53.7	58.7	63.2
	LWB	38.1	44.2	50.7	57.5	40.5	46.6	53.3	59.6	42.6	48.9	55.0	61.4
65	TCG	15.8	17.0	17.7	18.2	16.3	17.3	17.8	18.4	16.8	17.7	18.5	18.6
	SHG	15.2	13.2	10.9	8.87	16.1	13.9	11.2	8.99	16.8	14.6	11.8	9.18
	TC	15.7	16.8	17.5	18.1	16.2	17.2	17.6	18.2	16.6	17.6	18.3	18.4
	kW	1.11	1.12	1.13	1.14	1.12	1.13	1.14	1.15	1.13	1.15	1.16	1.16
	CMP	0.958	0.971	0.979	0.989	0.964	0.976	0.980	0.990	0.968	0.982	0.993	0.993
	LDB	41.3	46.5	52.3	57.6	44.4	49.5	55.5	60.3	48.0	52.3	57.6	62.7
	LWB	38.6	44.1	50.5	56.9	40.7	46.5	52.9	59.1	42.8	48.6	54.6	61.0
75	TCG	15.1	16.5	17.6	18.6	15.8	17.0	18.1	18.5	16.6	17.5	18.4	18.9
	SHG	14.9	13.1	11.0	9.01	15.8	13.9	11.6	9.08	16.6	14.7	12.0	9.37
	TC	15.0	16.4	17.5	18.5	15.7	16.9	18.0	18.4	16.4	17.3	18.2	18.7
	kW	1.20	1.22	1.24	1.26	1.22	1.24	1.25	1.26	1.24	1.25	1.27	1.28
	CMP	1.05	1.07	1.09	1.11	1.06	1.08	1.10	1.10	1.07	1.09	1.10	1.11
	LDB	42.2	46.8	52.1	57.3	45.1	49.4	54.6	60.1	48.5	52.0	57.2	62.3
	LWB	39.4	44.7	50.5	56.6	41.3	46.8	52.6	59.0	43.0	48.8	54.6	60.8
85	TCG	14.4	15.9	17.3	18.6	15.2	16.4	17.7	18.8	16.0	16.9	18.1	18.8
	SHG	14.4	12.9	10.9	8.98	15.2	13.7	11.5	9.24	16.0	14.7	12.0	9.39
	TC	14.3	15.7	17.2	18.4	15.0	16.3	17.6	18.7	15.9	16.7	17.9	18.7
	kW	1.28	1.32	1.35	1.38	1.31	1.34	1.36	1.39	1.34	1.35	1.38	1.39
	CMP	1.13	1.17	1.20	1.23	1.15	1.18	1.21	1.23	1.18	1.19	1.21	1.23
	LDB	43.5	47.4	52.3	57.4	46.5	49.8	54.7	59.8	49.5	52.2	57.2	62.3
	LWB	40.4	45.5	50.9	56.6	42.0	47.4	52.9	58.7	43.6	49.3	54.9	60.8
95	TCG	13.7	15.0	16.6	17.9	14.5	15.5	17.1	18.3	15.3	16.1	17.5	18.5
	SHG	13.7	12.4	10.7	8.71	14.5	13.4	11.3	9.04	15.3	14.4	11.9	9.34
	TC	13.6	14.9	16.4	17.8	14.4	15.4	16.9	18.1	15.1	15.9	17.3	18.4
	kW	1.37	1.41	1.45	1.48	1.40	1.43	1.47	1.50	1.43	1.45	1.49	1.51
	CMP	1.22	1.26	1.30	1.33	1.24	1.27	1.31	1.34	1.27	1.29	1.32	1.35
	LDB	45.2	48.5	53.1	58.0	48.1	50.6	55.3	60.2	50.9	52.7	57.4	62.4
	LWB	41.4	46.5	51.7	57.2	42.8	48.3	53.5	59.2	44.3	50.0	55.3	61.0
105	TCG	13.0	14.1	15.7	17.3	13.8	14.6	16.2	17.7	14.6	15.1	16.7	17.9
	SHG	13.0	12.0	10.3	8.47	13.8	12.9	11.0	8.82	14.6	13.9	11.7	9.15
	TC	12.9	14.0	15.6	17.2	13.6	14.4	16.1	17.5	14.4	14.9	16.5	17.7
	kW	1.45	1.49	1.55	1.60	1.48	1.51	1.57	1.61	1.52	1.54	1.59	1.62
	CMP	1.30	1.34	1.40	1.45	1.33	1.35	1.41	1.46	1.35	1.37	1.43	1.46
	LDB	47.0	49.6	54.0	58.7	49.6	51.6	55.9	60.7	52.4	53.6	57.9	62.8
	LWB	42.3	47.6	52.6	57.8	43.6	49.3	54.3	59.7	45.0	50.8	55.9	61.4
115	TCG	12.4	13.2	14.7	16.4	13.1	13.6	15.2	16.8	13.8	14.1	15.7	17.1
	SHG	12.4	11.6	9.86	8.12	13.1	12.4	10.5	8.52	13.8	13.4	11.3	8.93
	TC	12.2	13.1	14.6	16.3	12.9	13.5	15.1	16.7	13.6	13.9	15.5	17.0
	kW	1.53	1.56	1.63	1.70	1.57	1.59	1.66	1.72	1.60	1.62	1.68	1.73
	CMP	1.38	1.41	1.48	1.55	1.41	1.43	1.50	1.56	1.44	1.45	1.52	1.57
	LDB	48.7	50.8	55.1	59.6	51.2	52.6	56.9	61.4	53.8	54.6	58.6	63.2
	LWB	43.1	48.7	53.6	58.7	44.4	50.2	55.2	60.3	45.7	51.6	56.7	61.9
125	TCG	11.6	12.2	13.7	15.3	12.3	12.7	14.2	15.8	13.0	13.1	14.6	16.2
	SHG	11.6	11.1	9.44	7.70	12.3	12.0	10.1	8.14	13.0	12.9	10.9	8.61
	TC	11.4	12.1	13.6	15.2	12.1	12.5	14.0	15.6	12.8	12.9	14.4	16.0
	kW	1.61	1.64	1.71	1.79	1.65	1.66	1.73	1.81	1.68	1.69	1.76	1.84
	CMP	1.46	1.48	1.56	1.64	1.49	1.50	1.58	1.66	1.52	1.53	1.60	1.67
	LDB	50.7	52.0	56.2	60.6	53.0	53.7	57.8	62.2	55.3	55.6	59.5	63.8
	LWB	44.1	49.8	54.7	59.7	45.3	51.1	56.1	61.2	46.4	52.4	57.5	62.6

Rating condition.

Not recommended for long-term operation.

LEGEND

BF – Bypass Factor
CMP – Compressor
Edb – Entering Dry Bulb
Ewb – Entering Wet Bulb
kW – Total Power
LDB – Leaving Dry Bulb
LWB – Leaving Wet Bulb
SHG – Gross Sensible Capacity (1000 Btu/hour)
TC – Total Net Cooling Capacity (1000 Btu/hour)
TCG – Gross Cooling Capacity (1000 Btu/hour)

*Click here to view Systems Index Table.

NOTES:
1. Direct interpolation is permissible. Do not extrapolate.
2. The SHG is based on 80 F edb temperature of air entering indoor coil.
   Below 80 F edb, subtract (corr factor x cfm) from SHG.
   Above 80 F edb, add (corr factor x cfm) to SHG.
   Correction Factor = 1.10 x (1 - BF) x (edb - 80).

COOLING CAPACITIES (cont)

SYSTEM 4* — HIGH WALL SYSTEM (538ANX024 WITH 619ENX024)

Temp (F) Air Entering Condenser (Edb)		Air Entering Evaporator – Cfm/BF											
		456/0.04				502/0.04				550/0.05			
		Air Entering Evaporator – Ewb (F)											
		57	62	67	72	57	62	67	72	57	62	67	72
55	TCG	20.9	22.2	23.1	23.6	21.4	22.6	23.5	23.9	21.8	22.4	23.4	23.7
	SHG	20.3	17.6	14.5	11.5	21.2	18.3	15.0	11.7	21.8	18.6	15.1	11.7
	TC	20.7	22.0	22.9	23.4	21.1	22.4	23.3	23.6	21.5	22.2	23.2	23.5
	kW	1.34	1.34	1.35	1.35	1.34	1.35	1.36	1.36	1.35	1.35	1.36	1.36
	CMP	1.16	1.16	1.17	1.17	1.16	1.17	1.17	1.17	1.16	1.16	1.17	1.17
	LDB	39.0	44.5	50.9	57.1	41.3	46.5	52.7	58.8	43.7	49.1	54.8	60.6
	LWB	37.5	43.3	49.7	56.4	39.1	45.0	51.2	57.9	40.6	46.8	52.9	59.4
65	TCG	20.4	22.1	23.4	24.1	21.0	22.5	23.7	24.5	21.6	22.9	23.8	24.8
	SHG	20.1	17.7	14.8	11.7	21.0	18.5	15.2	12.0	21.6	19.3	15.6	12.2
	TC	20.2	21.9	23.2	23.9	20.8	22.3	23.5	24.2	21.4	22.6	23.6	24.5
	kW	1.48	1.49	1.50	1.50	1.49	1.50	1.50	1.51	1.50	1.51	1.51	1.52
	CMP	1.30	1.31	1.32	1.32	1.30	1.31	1.32	1.32	1.31	1.31	1.32	1.33
	LDB	39.4	44.3	50.3	56.6	41.5	46.1	52.3	58.3	43.9	47.9	54.1	59.8
	LWB	38.0	43.4	49.4	56.0	39.4	45.0	51.1	57.5	40.7	46.5	52.6	58.8
75	TCG	19.8	21.5	23.2	24.7	20.5	22.0	23.5	24.6	21.2	22.4	23.8	24.9
	SHG	19.7	17.5	14.8	12.0	20.5	18.4	15.2	12.1	21.2	19.2	15.8	12.4
	TC	19.6	21.3	23.0	24.5	20.3	21.8	23.2	24.4	21.0	22.2	23.6	24.7
	kW	1.64	1.66	1.66	1.68	1.66	1.67	1.67	1.68	1.67	1.67	1.68	1.69
	CMP	1.46	1.48	1.48	1.50	1.47	1.48	1.48	1.49	1.47	1.48	1.49	1.50
	LDB	40.2	44.8	50.3	56.1	42.4	46.4	52.3	58.1	44.6	48.0	53.8	59.5
	LWB	38.7	44.0	49.6	55.6	39.9	45.5	51.3	57.4	41.0	46.8	52.6	58.7
85	TCG	19.2	20.8	22.7	24.3	19.9	21.3	23.1	24.4	20.6	21.7	23.5	24.8
	SHG	19.2	17.1	14.6	11.8	19.9	18.1	15.1	12.0	20.6	19.0	15.7	12.4
	TC	19.0	20.6	22.5	24.1	19.7	21.1	22.9	24.2	20.4	21.5	23.2	24.5
	kW	1.82	1.84	1.85	1.87	1.84	1.85	1.86	1.87	1.85	1.87	1.87	1.88
	CMP	1.65	1.66	1.67	1.69	1.65	1.67	1.68	1.69	1.66	1.67	1.68	1.69
	LDB	41.3	45.5	50.7	56.4	43.5	47.0	52.4	58.2	45.6	48.4	53.8	59.5
	LWB	39.3	44.7	50.1	55.9	40.5	46.1	51.6	57.5	41.5	47.4	52.9	58.8
95	TCG	18.6	20.0	22.0	23.9	19.4	20.5	22.4	24.2	20.0	20.9	22.8	24.4
	SHG	18.6	16.8	14.3	11.7	19.4	17.7	14.9	12.0	20.0	18.6	15.6	12.3
	TC	18.4	19.8	21.8	23.7	19.1	20.3	22.2	24.0	19.8	20.7	22.6	24.1
	kW	2.03	2.05	2.07	2.09	2.05	2.06	2.08	2.10	2.06	2.07	2.09	2.10
	CMP	1.85	1.87	1.89	1.91	1.86	1.88	1.89	1.91	1.87	1.88	1.90	1.91
	LDB	42.5	46.3	51.3	56.7	44.6	47.7	52.8	58.2	46.6	49.1	54.1	59.7
	LWB	39.9	45.5	50.7	56.2	41.1	46.8	52.1	57.7	42.1	48.0	53.3	59.0
105	TCG	18.1	19.3	21.2	23.1	18.8	19.7	21.7	23.5	19.4	20.1	22.1	23.7
	SHG	18.1	16.4	14.0	11.4	18.8	17.3	14.6	11.7	19.4	18.2	15.3	12.0
	TC	17.9	19.1	21.0	22.9	18.5	19.5	21.5	23.3	19.1	19.9	21.9	23.5
	kW	2.26	2.28	2.31	2.33	2.28	2.30	2.33	2.34	2.30	2.31	2.34	2.35
	CMP	2.08	2.10	2.13	2.15	2.10	2.11	2.14	2.16	2.11	2.12	2.15	2.16
	LDB	43.6	47.0	51.9	57.3	45.7	48.4	53.3	58.7	47.7	49.7	54.6	60.1
	LWB	40.5	46.2	51.3	56.8	41.6	47.5	52.6	58.2	42.6	48.6	53.8	59.4
115	TCG	17.5	18.5	20.4	22.4	18.1	19.0	20.9	22.7	18.7	19.3	21.2	23.0
	SHG	17.5	16.0	13.6	11.1	18.1	16.9	14.3	11.4	18.7	17.8	14.9	11.8
	TC	17.3	18.3	20.2	22.2	17.9	18.7	20.6	22.5	18.5	19.1	21.0	22.8
	kW	2.53	2.55	2.59	2.61	2.55	2.56	2.60	2.62	2.57	2.58	2.62	2.63
	CMP	2.35	2.37	2.41	2.43	2.36	2.38	2.42	2.44	2.38	2.39	2.43	2.44
	LDB	44.8	47.7	52.7	57.8	46.8	49.1	54.0	59.2	48.8	50.4	55.2	60.5
	LWB	41.2	46.9	52.0	57.4	42.2	48.1	53.3	58.7	43.2	49.2	54.4	59.9
125	TCG	16.9	17.8	19.6	21.6	17.5	18.2	20.0	21.9	18.1	18.5	20.4	22.2
	SHG	16.9	15.7	13.3	10.8	17.5	16.5	13.9	11.2	18.1	17.4	14.6	11.5
	TC	16.7	17.6	19.4	21.4	17.3	17.9	19.8	21.7	17.9	18.3	20.1	22.0
	kW	2.83	2.85	2.90	2.93	2.85	2.87	2.91	2.94	2.87	2.88	2.93	2.95
	CMP	2.65	2.67	2.72	2.75	2.67	2.68	2.73	2.76	2.68	2.69	2.74	2.76
	LDB	46.0	48.5	53.4	58.5	48.0	49.8	54.7	59.8	49.8	51.0	55.8	61.0
	LWB	41.8	47.6	52.8	58.0	42.8	48.8	53.9	59.3	43.7	49.8	55.0	60.4

Rating condition.

Not recommended for long-term operation.

LEGEND

BF – Bypass Factor
CMP – Compressor
Edb – Entering Dry Bulb
Ewb – Entering Wet Bulb
kW – Total Power
LDB – Leaving Dry Bulb
LWB – Leaving Wet Bulb
SHG – Gross Sensible Capacity (1000 Btu/hour)
TC – Total Net Cooling Capacity (1000 Btu/hour)
TCG – Gross Cooling Capacity (1000 Btu/hour)

*Click here to view Systems Index Table.

NOTES:
1. Direct interpolation is permissible. Do not extrapolate.
2. The SHG is based on 80 F edb temperature of air entering indoor coil.
   Below 80 F edb, subtract (corr factor x cfm) from SHG.
   Above 80 F edb, add (corr factor x cfm) to SHG.
   Correction Factor = 1.10 x (1 - BF) x (edb - 80).

COOLING CAPACITIES (cont)

SYSTEM 5* — CEILING-SUSPENDED SYSTEM (538ANX018 WITH 619CNX024^)

Temp (F) Air Entering Condenser (Edb)		Air Entering Evaporator – Cfm/BF											
		320/0.02				400/0.03				500/0.03			
		Air Entering Evaporator – Ewb (F)											
		57	62	67	72	57	62	67	72	57	62	67	72
55	TCG	21.5	23.6	25.6	27.3	23.2	25.2	27.0	28.1	24.6	26.1	27.6	28.4
	SHG	20.1	18.0	15.6	13.0	22.7	20.0	16.9	13.6	24.6	21.7	17.8	13.9
	TC	21.1	23.3	25.3	27.0	22.7	24.7	26.5	27.7	24.1	25.6	27.1	27.9
	kW	1.29	1.31	1.32	1.34	1.32	1.34	1.36	1.37	1.36	1.37	1.38	1.39
	CMP	1.04	1.05	1.07	1.08	1.05	1.06	1.08	1.09	1.06	1.07	1.08	1.09
	LDB	34.4	39.4	44.9	50.9	38.9	43.9	49.7	55.8	43.0	47.4	53.4	59.4
	LWB	33.7	38.7	44.3	50.5	37.6	42.9	48.7	55.1	40.2	46.0	51.9	58.2
65	TCG	19.4	21.4	23.4	25.3	21.0	22.8	24.7	26.2	22.4	23.8	25.5	26.8
	SHG	18.5	16.5	14.3	12.0	20.8	18.5	15.7	12.7	22.4	20.2	16.8	13.2
	TC	19.1	21.1	23.1	25.0	20.6	22.4	24.3	25.8	21.9	23.3	25.0	26.3
	kW	1.34	1.37	1.40	1.42	1.38	1.41	1.43	1.45	1.43	1.44	1.46	1.48
	CMP	1.10	1.12	1.15	1.17	1.12	1.14	1.16	1.18	1.14	1.15	1.17	1.19
	LDB	35.9	40.6	45.9	51.5	40.4	44.8	50.2	56.1	44.4	47.9	53.5	59.3
	LWB	35.1	40.0	45.3	51.0	38.6	43.9	49.3	55.4	41.0	46.7	52.3	58.3
75	TCG	17.3	19.1	21.2	23.3	18.8	20.5	22.5	24.3	20.2	21.4	23.5	25.1
	SHG	16.8	15.0	13.1	11.1	18.8	17.0	14.5	11.8	20.2	18.8	15.8	12.5
	TC	17.0	18.8	20.9	23.0	18.4	20.1	22.2	23.9	19.8	21.0	23.0	24.7
	kW	1.40	1.43	1.47	1.50	1.44	1.48	1.51	1.53	1.49	1.52	1.54	1.57
	CMP	1.16	1.19	1.23	1.26	1.19	1.22	1.25	1.27	1.21	1.24	1.26	1.29
	LDB	37.3	41.9	46.8	52.1	41.9	45.7	50.8	56.4	45.9	48.4	53.6	59.2
	LWB	36.4	41.3	46.3	51.6	39.6	44.9	50.0	55.7	41.7	47.4	52.7	58.4
85	TCG	15.4	17.0	18.9	20.9	16.8	18.1	20.1	22.0	18.1	19.0	20.9	22.9
	SHG	15.2	13.6	11.8	9.99	16.8	15.4	13.2	10.8	18.1	17.0	14.4	11.5
	TC	15.1	16.7	18.6	20.6	16.5	17.8	19.7	21.7	17.7	18.5	20.5	22.4
	kW	1.43	1.47	1.52	1.56	1.49	1.52	1.57	1.60	1.54	1.56	1.60	1.64
	CMP	1.20	1.24	1.29	1.33	1.24	1.27	1.32	1.35	1.27	1.29	1.33	1.37
	LDB	38.8	43.3	48.2	53.2	43.7	46.8	51.8	57.0	47.5	49.5	54.4	59.6
	LWB	37.8	42.6	47.6	52.7	40.6	46.0	51.1	56.4	42.5	48.4	53.5	58.8
95	TCG	13.6	15.0	16.7	18.5	15.0	15.9	17.7	19.6	16.1	16.6	18.4	20.3
	SHG	13.6	12.2	10.6	8.90	15.0	13.9	11.8	9.70	16.1	15.4	13.0	10.4
	TC	13.3	14.7	16.4	18.2	14.6	15.6	17.3	19.3	15.7	16.2	18.0	19.9
	kW	1.46	1.50	1.55	1.61	1.52	1.55	1.60	1.65	1.57	1.59	1.64	1.69
	CMP	1.24	1.28	1.33	1.39	1.28	1.31	1.36	1.41	1.32	1.33	1.38	1.43
	LDB	40.7	44.7	49.5	54.5	45.4	48.0	52.9	57.9	49.1	50.5	55.3	60.3
	LWB	39.0	44.0	48.9	54.0	41.5	47.2	52.2	57.3	43.3	49.3	54.4	59.6
105	TCG	12.0	13.1	14.6	16.2	13.2	13.9	15.4	17.1	14.2	14.5	16.0	17.7
	SHG	12.0	11.0	9.44	7.87	13.2	12.5	10.6	8.60	14.2	13.8	11.6	9.27
	TC	11.8	12.8	14.3	16.0	12.9	13.6	15.1	16.8	13.8	14.1	15.6	17.4
	kW	1.48	1.52	1.57	1.63	1.54	1.57	1.62	1.68	1.60	1.61	1.66	1.72
	CMP	1.27	1.31	1.36	1.42	1.31	1.34	1.39	1.45	1.35	1.36	1.42	1.48
	LDB	42.7	46.0	50.9	55.8	47.3	49.2	54.0	59.0	50.8	51.6	56.2	61.2
	LWB	40.0	45.3	50.2	55.3	42.4	48.3	53.3	58.4	44.2	50.3	55.4	60.5
115	TCG	10.5	11.3	12.6	14.0	11.6	12.0	13.3	14.8	12.4	12.5	13.8	15.3
	SHG	10.5	9.75	8.35	6.91	11.6	11.1	9.38	7.56	12.4	12.3	10.3	8.18
	TC	10.3	11.0	12.4	13.8	11.3	11.7	13.0	14.5	12.1	12.1	13.4	15.0
	kW	1.49	1.52	1.58	1.65	1.55	1.57	1.63	1.70	1.61	1.61	1.67	1.74
	CMP	1.28	1.32	1.38	1.45	1.34	1.35	1.41	1.48	1.37	1.38	1.44	1.50
	LDB	44.7	47.4	52.2	57.1	49.1	50.3	55.1	60.1	52.5	52.7	57.2	62.1
	LWB	41.1	46.6	51.5	56.6	43.3	49.3	54.3	59.4	45.0	51.2	56.3	61.4
125	TCG	9.05	9.56	10.8	12.0	9.99	10.2	11.3	12.6	10.7	10.7	11.7	13.1
	SHG	9.05	8.58	7.33	6.01	9.99	9.80	8.25	6.60	10.7	10.7	9.14	7.16
	TC	8.84	9.35	10.5	11.8	9.72	9.90	11.0	12.4	10.4	10.4	11.4	12.7
	kW	1.49	1.51	1.58	1.65	1.55	1.56	1.63	1.70	1.61	1.61	1.67	1.73
	CMP	1.30	1.32	1.39	1.46	1.35	1.36	1.42	1.49	1.39	1.39	1.44	1.51
	LDB	47.1	48.8	53.5	58.4	51.0	51.6	56.2	61.1	54.2	54.2	58.1	63.0
	LWB	42.3	48.0	52.8	57.8	44.3	50.4	55.4	60.4	45.8	52.0	57.2	62.3

Rating condition.

Not recommended for long-term operation.

LEGEND

BF – Bypass Factor
CMP – Compressor
Edb – Entering Dry Bulb
Ewb – Entering Wet Bulb
kW – Total Power
LDB – Leaving Dry Bulb
LWB – Leaving Wet Bulb
SHG – Gross Sensible Capacity (1000 Btu/hour)
TC – Total Net Cooling Capacity (1000 Btu/hour)
TCG – Gross Cooling Capacity (1000 Btu/hour)

*Click here to view Systems Index Table.

^The 40QAB024 unit must be reconfigured to an 018 size unit by changing the motor speed fan tap plug. Refer to Installation Instructions for more details.

NOTES:
1. Direct interpolation is permissible. Do not extrapolate.
2. The SHG is based on 80 F edb temperature of air entering indoor coil.
   Below 80 F edb, subtract (corr factor x cfm) from SHG.
   Above 80 F edb, add (corr factor x cfm) to SHG.
   Correction Factor = 1.10 x (1 - BF) x (edb - 80).

COOLING CAPACITIES (cont)

SYSTEM 6* — CEILING-SUSPENDED SYSTEM (538ANX024 WITH 619CNX024)

Temp (F) Air Entering Condenser (Edb)		Air Entering Evaporator – Cfm/BF											
		400/0.03				500/0.03				600/0.04			
		Air Entering Evaporator – Ewb (F)											
		57	62	67	72	57	62	67	72	57	62	67	72
55	TCG	22.7	24.2	25.8	26.6	23.7	25.1	26.2	26.6	24.6	25.4	26.1	27.4
	SHG	21.3	18.5	15.8	12.7	23.1	19.8	16.4	12.9	24.5	20.6	16.7	13.4
	TC	22.3	23.8	25.5	26.2	23.3	24.6	25.7	26.1	24.1	24.8	25.6	26.8
	kW	1.41	1.42	1.44	1.45	1.44	1.45	1.47	1.47	1.47	1.47	1.48	1.50
	CMP	1.15	1.15	1.17	1.18	1.15	1.16	1.18	1.18	1.16	1.17	1.17	1.19
	LDB	35.5	41.5	47.2	53.7	39.8	45.7	51.8	57.9	42.9	48.9	55.0	60.1
	LWB	34.4	40.3	46.3	53.2	37.9	43.9	50.2	56.9	40.1	46.4	52.7	58.7
65	TCG	21.5	23.5	25.3	26.3	22.8	24.5	26.2	27.2	23.7	25.2	26.6	27.1
	SHG	20.4	18.2	15.5	12.6	22.5	19.6	16.5	13.2	23.7	20.9	17.2	13.3
	TC	21.1	23.2	24.9	25.9	22.3	24.0	25.8	26.8	23.2	24.7	26.1	26.6
	kW	1.53	1.54	1.56	1.57	1.56	1.57	1.59	1.61	1.58	1.60	1.62	1.62
	CMP	1.26	1.28	1.30	1.30	1.28	1.28	1.31	1.32	1.28	1.29	1.31	1.32
	LDB	36.1	41.0	46.8	53.3	39.8	45.0	50.6	56.8	43.1	47.5	53.4	59.6
	LWB	35.1	40.2	46.1	52.8	38.2	43.8	49.5	55.9	40.3	46.0	51.8	58.4
75	TCG	20.2	22.2	24.1	25.7	21.5	23.2	25.1	26.6	22.5	23.9	25.7	26.6
	SHG	19.4	17.3	14.9	12.3	21.3	18.8	16.0	12.9	22.5	20.2	16.8	13.1
	TC	19.9	21.8	23.8	25.3	21.0	22.8	24.7	26.2	22.0	23.4	25.2	26.1
	kW	1.65	1.67	1.70	1.72	1.68	1.70	1.73	1.75	1.71	1.74	1.76	1.77
	CMP	1.39	1.41	1.44	1.46	1.40	1.43	1.45	1.47	1.42	1.44	1.46	1.47
	LDB	37.0	41.8	47.2	53.1	40.7	45.3	50.8	56.6	43.9	47.7	53.3	59.2
	LWB	35.9	41.0	46.5	52.6	38.8	44.3	49.8	55.8	40.7	46.4	52.0	58.2
85	TCG	18.9	20.8	23.0	25.1	20.1	21.9	24.0	25.9	21.3	22.7	24.7	26.2
	SHG	18.4	16.4	14.3	11.9	20.1	18.1	15.4	12.6	21.3	19.4	16.3	12.9
	TC	18.6	20.5	22.6	24.7	19.7	21.5	23.6	25.5	20.8	22.2	24.2	25.7
	kW	1.76	1.80	1.84	1.87	1.80	1.84	1.87	1.90	1.84	1.87	1.89	1.92
	CMP	1.51	1.54	1.58	1.62	1.53	1.57	1.60	1.63	1.55	1.58	1.60	1.63
	LDB	37.9	42.5	47.6	53.0	41.7	45.7	50.9	56.4	44.8	47.8	53.1	58.9
	LWB	36.8	41.8	46.9	52.4	39.5	44.8	50.0	55.7	41.1	46.8	52.1	58.0
95	TCG	17.7	19.5	21.5	23.6	18.9	20.5	22.6	24.6	20.0	21.2	23.3	25.2
	SHG	17.4	15.5	13.5	11.3	18.9	17.1	14.6	12.0	20.0	18.4	15.6	12.5
	TC	17.4	19.1	21.2	23.3	18.5	20.1	22.2	24.2	19.5	20.7	22.8	24.7
	kW	1.90	1.94	1.99	2.03	1.95	1.98	2.03	2.07	1.99	2.01	2.07	2.09
	CMP	1.66	1.69	1.74	1.78	1.68	1.71	1.77	1.80	1.70	1.73	1.78	1.81
	LDB	38.8	43.4	48.4	53.6	42.8	46.4	51.4	56.7	45.8	48.5	53.4	58.9
	LWB	37.6	42.6	47.7	53.0	40.1	45.5	50.6	56.1	41.7	47.4	52.6	58.1
105	TCG	16.5	18.2	20.1	22.1	17.7	19.1	21.0	23.2	18.7	19.7	21.7	23.8
	SHG	16.5	14.7	12.7	10.6	17.7	16.2	13.8	11.4	18.7	17.5	14.8	11.9
	TC	16.2	17.8	19.7	21.8	17.4	18.7	20.6	22.8	18.3	19.3	21.2	23.3
	kW	2.06	2.10	2.15	2.21	2.11	2.14	2.20	2.26	2.15	2.17	2.23	2.29
	CMP	1.82	1.86	1.91	1.97	1.85	1.88	1.93	2.00	1.87	1.90	1.95	2.01
	LDB	39.8	44.2	49.2	54.4	44.0	47.2	52.1	57.2	46.9	49.2	54.1	59.2
	LWB	38.4	43.5	48.6	53.8	40.7	46.2	51.3	56.6	42.2	48.0	53.2	58.5
115	TCG	15.4	16.9	18.7	20.6	16.6	17.7	19.5	21.5	17.5	18.3	20.1	22.1
	SHG	15.4	13.8	11.9	9.94	16.6	15.3	13.0	10.6	17.5	16.5	13.9	11.2
	TC	15.1	16.6	18.4	20.3	16.3	17.3	19.2	21.2	17.1	17.8	19.7	21.7
	kW	2.24	2.28	2.34	2.40	2.30	2.33	2.38	2.45	2.34	2.36	2.42	2.50
	CMP	2.01	2.04	2.10	2.16	2.04	2.07	2.12	2.20	2.06	2.08	2.14	2.22
	LDB	41.1	45.1	50.1	55.2	45.1	47.9	52.8	57.9	48.0	49.8	54.7	59.8
	LWB	39.2	44.3	49.4	54.6	41.3	46.9	52.0	57.3	42.8	48.7	53.8	59.0
125	TCG	14.4	15.6	17.3	19.1	15.5	16.4	18.1	20.0	16.3	16.9	18.6	20.5
	SHG	14.4	13.0	11.2	9.28	15.5	14.4	12.2	9.95	16.3	15.6	13.1	10.5
	TC	14.1	15.3	17.0	18.8	15.1	16.0	17.8	19.6	15.9	16.5	18.2	20.1
	kW	2.44	2.48	2.54	2.61	2.50	2.53	2.58	2.66	2.54	2.56	2.62	2.70
	CMP	2.21	2.25	2.31	2.37	2.24	2.27	2.33	2.41	2.27	2.29	2.35	2.44
	LDB	42.3	45.9	50.9	56.0	46.3	48.6	53.5	58.6	49.1	50.5	55.3	60.4
	LWB	39.9	45.1	50.2	55.4	41.9	47.6	52.7	57.9	43.3	49.3	54.4	59.6

Rating condition.

Not recommended for long-term operation.

LEGEND

BF – Bypass Factor
CMP – Compressor
Edb – Entering Dry Bulb
Ewb – Entering Wet Bulb
kW – Total Power
LDB – Leaving Dry Bulb
LWB – Leaving Wet Bulb
SHG – Gross Sensible Capacity (1000 Btu/hour)
TC – Total Net Cooling Capacity (1000 Btu/hour)
TCG – Gross Cooling Capacity (1000 Btu/hour)

*Click here to view Systems Index Table.

NOTES:
1. Direct interpolation is permissible. Do not extrapolate.
2. The SHG is based on 80 F edb temperature of air entering indoor coil.
   Below 80 F edb, subtract (corr factor x cfm) from SHG.
   Above 80 F edb, add (corr factor x cfm) to SHG.
   Correction Factor = 1.10 x (1 - BF) x (edb - 80).

COOLING CAPACITIES (cont)

SYSTEM 7* — CEILING-SUSPENDED SYSTEM (538ANX030 WITH 619CNX036)

Temp (F) Air Entering Condenser (Edb)		Air Entering Evaporator – Cfm/BF											
		640/0.02				740/0.02				840/0.03			
		Air Entering Evaporator – Ewb (F)											
		57	62	67	72	57	62	67	72	57	62	67	72
55	TCG	30.3	32.5	34.3	35.5	31.7	33.3	34.8	35.7	33.0	33.8	35.0	35.9
	SHG	30.3	26.5	21.9	17.3	31.7	28.2	22.9	17.7	33.0	29.8	23.7	18.1
	TC	29.9	32.0	33.8	35.0	31.1	32.7	34.2	35.2	32.3	33.1	34.4	35.3
	kW	1.94	1.96	1.98	2.00	1.97	1.99	2.01	2.02	2.01	2.02	2.04	2.05
	CMP	1.60	1.62	1.65	1.66	1.61	1.63	1.65	1.67	1.63	1.64	1.66	1.67
	LDB	40.0	45.1	51.2	57.5	43.9	47.8	54.0	60.1	46.9	50.2	56.3	62.1
	LWB	38.5	44.2	50.2	56.7	40.7	46.6	52.6	59.0	42.2	48.5	54.5	60.7
65	TCG	29.0	31.3	33.7	35.4	30.6	32.3	34.6	35.8	31.8	32.8	34.6	36.0
	SHG	29.0	25.8	21.7	17.3	30.6	27.8	23.0	17.8	31.8	29.4	23.8	18.3
	TC	28.5	30.8	33.3	35.0	30.1	31.7	34.0	35.2	31.2	32.2	34.0	35.4
	kW	2.09	2.11	2.14	2.16	2.12	2.14	2.17	2.19	2.16	2.17	2.19	2.22
	CMP	1.76	1.78	1.81	1.84	1.78	1.79	1.82	1.84	1.78	1.80	1.82	1.84
	LDB	40.9	45.3	50.9	57.0	44.3	47.7	53.3	59.6	47.4	49.9	55.8	61.6
	LWB	39.1	44.5	50.2	56.3	40.9	46.8	52.4	58.7	42.5	48.6	54.4	60.4
75	TCG	27.7	29.7	32.3	34.3	29.2	30.7	33.1	34.8	30.5	31.4	33.4	35.2
	SHG	27.7	24.9	21.0	16.8	29.2	26.8	22.3	17.5	30.5	28.6	23.4	18.1
	TC	27.2	29.3	31.8	33.8	28.7	30.1	32.6	34.3	29.9	30.8	32.8	34.6
	kW	2.24	2.27	2.31	2.33	2.29	2.31	2.34	2.37	2.33	2.34	2.36	2.40
	CMP	1.92	1.95	1.99	2.02	1.95	1.97	2.00	2.03	1.96	1.97	2.00	2.03
	LDB	42.0	45.9	51.3	57.2	45.3	48.2	53.7	59.5	48.2	50.2	55.8	61.4
	LWB	39.7	45.2	50.6	56.6	41.4	47.3	52.8	58.8	42.9	49.0	54.6	60.4
85	TCG	26.3	28.2	30.8	33.1	27.8	29.1	31.6	33.9	29.1	29.9	32.2	34.5
	SHG	26.3	23.9	20.3	16.3	27.8	25.9	21.6	17.1	29.1	27.8	22.9	17.9
	TC	25.8	27.7	30.4	32.7	27.3	28.6	31.1	33.4	28.5	29.3	31.6	33.9
	kW	2.40	2.44	2.48	2.51	2.45	2.47	2.50	2.55	2.50	2.51	2.54	2.58
	CMP	2.09	2.12	2.17	2.20	2.12	2.14	2.17	2.21	2.14	2.15	2.18	2.22
	LDB	43.1	46.5	51.7	57.4	46.3	48.6	54.0	59.5	49.0	50.4	55.8	61.2
	LWB	40.3	45.8	51.1	56.8	41.9	47.8	53.2	58.9	43.3	49.4	54.8	60.4
95	TCG	24.9	26.5	29.1	31.7	26.4	27.4	29.9	32.3	27.6	28.1	30.6	32.9
	SHG	24.9	22.9	19.4	15.7	26.4	24.9	20.8	16.5	27.6	26.7	22.1	17.3
	TC	24.5	26.0	28.7	31.2	25.9	26.9	29.4	31.8	27.0	27.5	30.0	32.3
	kW	2.58	2.61	2.67	2.71	2.63	2.65	2.70	2.74	2.68	2.69	2.73	2.77
	CMP	2.28	2.31	2.36	2.40	2.31	2.33	2.37	2.41	2.33	2.34	2.38	2.43
	LDB	44.3	47.3	52.3	57.8	47.4	49.3	54.4	59.9	50.0	51.0	56.1	61.5
	LWB	40.9	46.6	51.8	57.3	42.5	48.5	53.7	59.3	43.8	49.9	55.3	60.8
105	TCG	23.6	24.8	27.4	29.9	24.9	25.7	28.2	30.6	26.1	26.4	28.8	31.2
	SHG	23.6	21.9	18.5	14.9	24.9	23.8	19.9	15.8	26.1	25.6	21.3	16.6
	TC	23.2	24.4	26.9	29.5	24.4	25.2	27.7	30.1	25.5	25.8	28.3	30.6
	kW	2.77	2.80	2.87	2.91	2.83	2.84	2.90	2.94	2.87	2.88	2.93	2.98
	CMP	2.48	2.51	2.57	2.61	2.51	2.53	2.59	2.63	2.54	2.54	2.60	2.64
	LDB	45.5	48.0	53.1	58.4	48.5	50.0	55.0	60.4	51.1	51.7	56.5	61.9
	LWB	41.5	47.4	52.5	57.9	43.1	49.1	54.3	59.8	44.3	50.5	55.8	61.2
115	TCG	22.3	23.2	25.6	28.1	23.5	24.0	26.4	28.8	24.6	24.7	26.9	29.3
	SHG	22.3	20.9	17.6	14.2	23.5	22.8	19.0	15.0	24.6	24.4	20.3	15.8
	TC	21.9	22.8	25.2	27.7	23.0	23.5	25.9	28.3	24.0	24.2	26.4	28.8
	kW	2.99	3.01	3.08	3.13	3.04	3.05	3.12	3.17	3.09	3.09	3.15	3.20
	CMP	2.70	2.73	2.79	2.84	2.73	2.75	2.81	2.86	2.76	2.76	2.83	2.87
	LDB	46.7	48.8	53.8	59.0	49.7	50.7	55.6	60.9	52.2	52.3	57.1	62.3
	LWB	42.1	48.1	53.2	58.5	43.6	49.8	55.0	60.3	44.9	51.1	56.3	61.7
125	TCG	21.0	21.7	23.9	26.3	22.1	22.4	24.6	26.9	23.1	23.1	25.1	27.5
	SHG	21.0	20.0	16.8	13.5	22.1	21.7	18.1	14.3	23.1	23.1	19.4	15.1
	TC	20.6	21.3	23.5	25.9	21.7	21.9	24.1	26.4	22.5	22.5	24.6	26.9
	kW	3.22	3.24	3.30	3.37	3.27	3.28	3.34	3.40	3.32	3.32	3.38	3.44
	CMP	2.94	2.96	3.03	3.09	2.97	2.98	3.05	3.10	3.00	3.00	3.06	3.12
	LDB	47.9	49.5	54.5	59.7	50.8	51.4	56.3	61.4	53.3	53.2	57.6	62.8
	LWB	42.8	48.8	53.9	59.2	44.2	50.4	55.6	60.9	45.4	51.6	56.9	62.2

Rating condition.

Not recommended for long-term operation.

LEGEND

BF – Bypass Factor
CMP – Compressor
Edb – Entering Dry Bulb
Ewb – Entering Wet Bulb
kW – Total Power
LDB – Leaving Dry Bulb
LWB – Leaving Wet Bulb
SHG – Gross Sensible Capacity (1000 Btu/hour)
TC – Total Net Cooling Capacity (1000 Btu/hour)
TCG – Gross Cooling Capacity (1000 Btu/hour)

*Click here to view Systems Index Table.

NOTES:
1. Direct interpolation is permissible. Do not extrapolate.
2. The SHG is based on 80 F edb temperature of air entering indoor coil.
   Below 80 F edb, subtract (corr factor x cfm) from SHG.
   Above 80 F edb, add (corr factor x cfm) to SHG.
   Correction Factor = 1.10 x (1 - BF) x (edb - 80).

COOLING CAPACITIES (cont)

SYSTEM 8* — CEILING-SUSPENDED SYSTEM (538ANX, APX, AEX036 WITH 619CNX036)

Temp (F) Air Entering Condenser (Edb)		Air Entering Evaporator – Cfm/BF											
		640/0.03				740/0.03				840/0.04			
		Air Entering Evaporator – Ewb (F)											
		57	62	67	72	57	62	67	72	57	62	67	72
55	TCG	37.0	39.7	41.2	43.2	38.4	40.9	42.6	43.5	39.5	41.0	42.5	43.7
	SHG	35.3	30.9	25.5	20.8	37.8	32.9	27.0	21.2	39.5	34.1	27.5	21.5
	TC	36.4	39.2	40.6	42.6	37.7	40.2	42.0	42.8	38.8	40.3	41.7	42.9
	kW	1.99	2.01	2.02	2.04	2.02	2.04	2.06	2.07	2.05	2.06	2.08	2.10
	CMP	1.67	1.69	1.70	1.73	1.68	1.70	1.72	1.73	1.69	1.70	1.72	1.73
	LDB	37.1	42.5	49.2	55.0	40.3	45.5	51.8	58.1	43.5	48.7	54.8	60.4
	LWB	35.9	41.5	48.1	54.5	38.4	44.2	50.5	57.2	40.5	46.6	52.8	59.2
65	TCG	34.8	37.6	39.9	41.8	36.2	38.8	40.7	42.1	37.4	39.4	41.1	42.3
	SHG	33.7	29.5	24.8	20.1	36.1	31.6	26.0	20.5	37.4	33.2	26.9	20.9
	TC	34.3	37.0	39.3	41.3	35.6	38.1	40.1	41.5	36.7	38.7	40.3	41.6
	kW	2.23	2.25	2.27	2.29	2.26	2.28	2.30	2.32	2.29	2.31	2.33	2.35
	CMP	1.92	1.93	1.95	1.98	1.92	1.94	1.96	1.98	1.93	1.95	1.97	1.98
	LDB	37.5	42.8	48.8	54.9	40.7	45.7	51.8	57.9	44.1	48.2	54.4	60.2
	LWB	36.4	41.9	47.9	54.3	38.9	44.5	50.6	57.0	40.8	46.7	52.8	59.1
75	TCG	32.4	35.2	37.7	39.9	33.9	36.3	38.6	40.3	35.2	37.0	39.1	40.7
	SHG	31.7	27.9	23.6	19.2	33.8	29.9	24.9	19.7	35.2	31.7	25.9	20.2
	TC	31.8	34.6	37.2	39.4	33.3	35.7	38.0	39.7	34.5	36.3	38.4	40.0
	kW	2.50	2.53	2.56	2.59	2.54	2.57	2.59	2.62	2.58	2.60	2.62	2.65
	CMP	2.18	2.22	2.24	2.28	2.20	2.23	2.26	2.28	2.22	2.23	2.26	2.29
	LDB	38.4	43.4	49.1	55.0	41.7	46.1	51.9	57.9	44.9	48.5	54.3	60.1
	LWB	37.2	42.6	48.3	54.5	39.5	45.1	50.9	57.1	41.2	47.1	52.9	59.0
85	TCG	29.9	32.7	35.6	38.1	31.5	33.8	36.5	38.5	33.0	34.7	37.1	39.1
	SHG	29.7	26.4	22.5	18.3	31.5	28.3	23.8	18.9	33.0	30.2	24.9	19.6
	TC	29.4	32.2	35.0	37.6	30.9	33.2	35.9	37.9	32.4	34.0	36.4	38.4
	kW	2.77	2.82	2.85	2.89	2.82	2.85	2.89	2.92	2.87	2.88	2.91	2.95
	CMP	2.45	2.50	2.54	2.57	2.48	2.51	2.55	2.58	2.50	2.52	2.55	2.59
	LDB	39.4	44.0	49.4	55.2	42.7	46.6	52.0	57.9	45.6	48.7	54.3	60.0
	LWB	38.1	43.2	48.7	54.6	40.1	45.6	51.1	57.2	41.6	47.5	53.1	59.0
95	TCG	27.6	30.1	33.0	35.4	29.2	31.2	34.0	36.1	30.6	32.0	34.6	36.8
	SHG	27.6	24.6	21.0	17.1	29.2	26.6	22.4	17.8	30.6	28.4	23.6	18.6
	TC	27.1	29.6	32.5	34.9	28.6	30.6	33.4	35.5	30.0	31.4	34.0	36.1
	kW	3.07	3.13	3.18	3.22	3.13	3.18	3.22	3.25	3.19	3.21	3.25	3.29
	CMP	2.76	2.82	2.87	2.90	2.79	2.84	2.88	2.91	2.83	2.85	2.89	2.93
	LDB	40.6	44.9	50.1	55.8	44.0	47.2	52.5	58.3	46.8	49.3	54.5	60.1
	LWB	38.9	44.2	49.4	55.2	40.7	46.3	51.7	57.6	42.2	48.1	53.5	59.3
105	TCG	25.4	27.5	30.3	32.7	26.9	28.5	31.3	33.4	28.2	29.3	32.0	34.1
	SHG	25.4	22.9	19.6	15.9	26.9	24.8	21.0	16.6	28.2	26.6	22.2	17.4
	TC	24.9	27.0	29.8	32.2	26.4	28.0	30.7	32.8	27.6	28.7	31.4	33.5
	kW	3.40	3.46	3.54	3.57	3.47	3.51	3.58	3.61	3.53	3.56	3.62	3.66
	CMP	3.09	3.15	3.23	3.26	3.13	3.18	3.25	3.27	3.17	3.20	3.26	3.30
	LDB	42.1	45.9	50.9	56.5	45.3	48.1	53.1	58.8	48.0	49.9	55.0	60.6
	LWB	39.7	45.1	50.2	55.9	41.4	47.1	52.3	58.1	42.8	48.7	54.0	59.7
115	TCG	23.3	25.0	27.6	30.1	24.6	25.9	28.5	30.9	25.8	26.6	29.2	31.3
	SHG	23.3	21.2	18.1	14.8	24.6	23.0	19.4	15.5	25.8	24.7	20.7	16.2
	TC	22.8	24.5	27.1	29.7	24.1	25.4	28.0	30.3	25.2	26.0	28.6	30.7
	kW	3.76	3.82	3.91	3.98	3.83	3.88	3.97	4.02	3.90	3.92	4.01	4.05
	CMP	3.45	3.51	3.60	3.67	3.50	3.54	3.63	3.68	3.54	3.57	3.65	3.69
	LDB	43.5	46.8	51.8	57.1	46.7	49.0	53.9	59.3	49.3	50.7	55.6	61.1
	LWB	40.5	46.0	51.1	56.6	42.1	48.0	53.1	58.6	43.5	49.5	54.7	60.3
125	TCG	21.2	22.5	24.9	27.3	22.5	23.3	25.6	28.0	23.5	24.0	26.3	28.5
	SHG	21.2	19.6	16.6	13.5	22.5	21.3	17.9	14.3	23.5	22.8	19.1	14.9
	TC	20.8	22.1	24.5	26.9	22.0	22.8	25.1	27.5	22.9	23.4	25.7	27.9
	kW	4.14	4.20	4.30	4.39	4.22	4.26	4.36	4.43	4.28	4.30	4.41	4.46
	CMP	3.83	3.89	3.99	4.07	3.88	3.92	4.02	4.10	3.93	3.95	4.05	4.10
	LDB	45.1	47.8	52.8	58.0	48.1	49.8	54.8	60.0	50.7	51.5	56.3	61.6
	LWB	41.3	47.0	52.1	57.4	42.8	48.8	54.0	59.3	44.1	50.2	55.4	60.8

Rating condition.

Not recommended for long-term operation.

LEGEND

BF – Bypass Factor
CMP – Compressor
Edb – Entering Dry Bulb
Ewb – Entering Wet Bulb
kW – Total Power
LDB – Leaving Dry Bulb
LWB – Leaving Wet Bulb
SHG – Gross Sensible Capacity (1000 Btu/hour)
TC – Total Net Cooling Capacity (1000 Btu/hour)
TCG – Gross Cooling Capacity (1000 Btu/hour)

*Click here to view Systems Index Table.

NOTES:
1. Direct interpolation is permissible. Do not extrapolate.
2. The SHG is based on 80 F edb temperature of air entering indoor coil.
   Below 80 F edb, subtract (corr factor x cfm) from SHG.
   Above 80 F edb, add (corr factor x cfm) to SHG.
   Correction Factor = 1.10 x (1 - BF) x (edb - 80).

COOLING CAPACITIES (cont)

SYSTEM 9* — 53QAB048 CEILING-SUSPENDED SYSTEM (538ANX, APX, AEX048 WITH 619CNX048)

Temp (F) Air Entering Condenser (Edb)		Air Entering Evaporator – Cfm/BF											
		1100/0.05				1160/0.05				1200/0.06			
		Air Entering Evaporator – Ewb (F)											
		57	62	67	72	57	62	67	72	57	62	67	72
55	TCG	47.5	49.7	51.8	53.0	48.2	49.9	51.9	53.1	48.6	50.3	51.9	53.1
	SHG	46.5	39.7	32.7	25.9	47.6	40.4	33.0	26.1	48.2	41.0	33.3	26.2
	TC	46.4	48.6	50.7	51.9	47.0	48.7	50.7	51.9	47.4	49.1	50.7	51.9
	kW	2.86	2.87	2.90	2.91	2.88	2.89	2.92	2.93	2.90	2.91	2.93	2.95
	CMP	2.26	2.28	2.30	2.31	2.27	2.28	2.30	2.31	2.27	2.28	2.30	2.32
	LDB	42.0	47.6	53.5	59.2	43.1	48.9	54.7	60.2	43.9	49.4	55.4	60.8
	LWB	39.2	45.3	51.5	58.0	40.0	46.3	52.4	58.8	40.5	46.7	53.0	59.4
65	TCG	46.7	49.3	51.9	54.2	47.2	49.7	52.3	53.8	47.4	50.1	52.4	54.7
	SHG	46.2	39.9	33.0	26.4	47.0	40.8	33.6	26.4	47.4	41.5	33.9	26.9
	TC	45.6	48.2	50.8	53.2	46.0	48.5	51.2	52.7	46.3	48.9	51.2	53.5
	kW	3.18	3.19	3.22	3.25	3.20	3.21	3.24	3.26	3.21	3.23	3.26	3.29
	CMP	2.59	2.61	2.63	2.67	2.59	2.61	2.64	2.66	2.59	2.62	2.64	2.67
	LDB	41.6	47.0	52.8	58.5	43.0	48.0	53.8	59.6	44.0	48.6	54.5	60.0
	LWB	39.3	45.2	51.2	57.4	40.1	46.0	52.0	58.4	40.7	46.5	52.6	58.7
75	TCG	44.7	47.6	50.7	53.4	45.4	48.1	51.1	53.2	45.8	48.4	51.3	54.1
	SHG	44.5	39.2	32.5	26.1	45.3	40.1	33.2	26.2	45.8	40.8	33.5	26.7
	TC	43.7	46.6	49.6	52.4	44.3	46.9	50.0	52.1	44.7	47.3	50.1	52.9
	kW	3.52	3.55	3.58	3.62	3.54	3.57	3.60	3.63	3.56	3.59	3.61	3.66
	CMP	2.95	2.97	3.00	3.04	2.95	2.98	3.01	3.04	2.96	2.98	3.01	3.05
	LDB	42.5	47.1	52.8	58.4	43.8	48.1	53.7	59.5	44.7	48.6	54.4	59.8
	LWB	39.8	45.5	51.3	57.4	40.6	46.4	52.2	58.3	41.1	46.9	52.7	58.6
85	TCG	42.8	46.0	49.4	52.7	43.7	46.4	49.9	52.6	44.2	46.8	50.1	53.4
	SHG	42.8	38.4	32.0	25.8	43.7	39.3	32.7	25.9	44.2	40.0	33.2	26.5
	TC	41.7	45.0	48.4	51.6	42.6	45.3	48.8	51.5	43.1	45.6	49.0	52.3
	kW	3.86	3.90	3.94	3.98	3.89	3.92	3.96	4.00	3.91	3.94	3.97	4.03
	CMP	3.30	3.34	3.37	3.42	3.31	3.34	3.38	3.42	3.32	3.35	3.38	3.44
	LDB	43.4	47.2	52.8	58.3	44.6	48.2	53.7	59.3	45.4	48.7	54.2	59.6
	LWB	40.4	45.9	51.5	57.3	41.0	46.7	52.3	58.2	41.4	47.2	52.8	58.5
95	TCG	40.8	43.6	47.3	50.3	41.6	44.1	47.8	50.5	42.1	44.5	48.1	51.1
	SHG	40.8	37.0	31.1	24.8	41.6	38.1	31.8	25.1	42.1	38.8	32.3	25.5
	TC	39.7	42.6	46.3	49.3	40.5	43.0	46.7	49.4	41.0	43.4	47.0	50.0
	kW	4.23	4.28	4.33	4.37	4.26	4.31	4.35	4.38	4.28	4.33	4.37	4.41
	CMP	3.68	3.74	3.78	3.82	3.70	3.75	3.79	3.82	3.71	3.75	3.79	3.84
	LDB	44.5	47.9	53.2	58.8	45.7	48.7	54.0	59.7	46.5	49.2	54.5	60.1
	LWB	41.0	46.6	52.0	57.8	41.6	47.3	52.7	58.6	42.0	47.7	53.2	59.0
105	TCG	38.6	41.0	45.0	48.3	39.5	41.5	45.4	48.5	39.9	41.9	45.7	49.1
	SHG	38.6	35.5	30.0	24.0	39.5	36.5	30.7	24.3	39.9	37.2	31.2	24.7
	TC	37.6	40.0	44.0	47.3	38.4	40.5	44.4	47.5	38.8	40.8	44.6	48.0
	kW	4.62	4.67	4.75	4.80	4.65	4.70	4.77	4.81	4.68	4.72	4.79	4.84
	CMP	4.09	4.14	4.21	4.26	4.10	4.15	4.22	4.26	4.11	4.16	4.23	4.28
	LDB	45.9	48.7	53.7	59.2	47.0	49.5	54.5	60.0	47.7	50.0	54.9	60.4
	LWB	41.7	47.4	52.6	58.2	42.3	48.1	53.3	59.0	42.7	48.5	53.7	59.3
115	TCG	36.6	38.5	42.3	45.9	37.3	38.9	42.8	46.3	37.8	39.2	43.1	46.7
	SHG	36.6	34.0	28.8	23.0	37.3	35.0	29.5	23.4	37.8	35.6	30.0	23.8
	TC	35.6	37.5	41.3	44.9	36.2	37.9	41.8	45.2	36.7	38.1	42.0	45.6
	kW	5.03	5.08	5.18	5.25	5.07	5.11	5.21	5.27	5.09	5.13	5.23	5.29
	CMP	4.51	4.56	4.66	4.72	4.53	4.57	4.67	4.73	4.54	4.58	4.68	4.74
	LDB	47.2	49.6	54.4	59.7	48.3	50.3	55.1	60.4	49.0	50.8	55.5	60.8
	LWB	42.4	48.2	53.3	58.8	43.0	48.8	54.0	59.5	43.3	49.2	54.4	59.8
125	TCG	34.4	35.9	39.5	42.9	35.1	36.4	39.9	43.7	35.5	36.6	40.1	44.0
	SHG	34.4	32.5	27.4	21.8	35.1	33.5	28.1	22.4	35.5	34.1	28.6	22.7
	TC	33.4	35.0	38.5	41.9	34.0	35.3	38.9	42.7	34.4	35.5	39.0	42.9
	kW	5.46	5.50	5.61	5.68	5.49	5.53	5.64	5.73	5.52	5.55	5.66	5.76
	CMP	4.95	4.99	5.10	5.16	4.97	5.00	5.11	5.21	4.98	5.01	5.12	5.22
	LDB	48.6	50.4	55.2	60.5	49.7	51.2	55.9	61.0	50.4	51.6	56.3	61.4
	LWB	43.1	49.0	54.1	59.6	43.7	49.6	54.8	60.0	44.0	50.0	55.2	60.4

Rating condition.

Not recommended for long-term operation.

LEGEND

BF – Bypass Factor
CMP – Compressor
Edb – Entering Dry Bulb
Ewb – Entering Wet Bulb
kW – Total Power
LDB – Leaving Dry Bulb
LWB – Leaving Wet Bulb
SHG – Gross Sensible Capacity (1000 Btu/hour)
TC – Total Net Cooling Capacity (1000 Btu/hour)
TCG – Gross Cooling Capacity (1000 Btu/hour)

*Click here to view Systems Index Table.

NOTES:
1. Direct interpolation is permissible. Do not extrapolate.
2. The SHG is based on 80 F edb temperature of air entering indoor coil.
   Below 80 F edb, subtract (corr factor x cfm) from SHG.
   Above 80 F edb, add (corr factor x cfm) to SHG.
   Correction Factor = 1.10 x (1 - BF) x (edb - 80).

COOLING CAPACITIES (cont)

SYSTEM 10* — CEILING-SUSPENDED SYSTEM (538ANX, APX, AEX060 WITH 619CNX060)

Temp (F) Air Entering Condenser (Edb)		Air Entering Evaporator – Cfm/BF											
		1040/0.03				1220/0.04				1600/0.06			
		Air Entering Evaporator – Ewb (F)											
		57	62	67	72	57	62	67	72	57	62	67	72
55	TCG	58.9	63.3	67.7	71.5	61.4	65.4	69.6	71.4	66.0	67.6	71.2	73.3
	SHG	55.8	48.9	41.7	34.2	60.1	52.3	43.9	34.6	66.0	58.2	47.4	36.7
	TC	57.8	62.2	66.6	70.4	60.0	64.1	68.3	70.1	64.3	65.9	69.4	71.6
	kW	3.94	3.99	4.05	4.11	4.02	4.07	4.13	4.15	4.20	4.21	4.27	4.30
	CMP	3.37	3.42	3.48	3.53	3.39	3.44	3.51	3.53	3.46	3.47	3.52	3.56
	LDB	36.8	42.2	47.9	53.8	40.3	45.6	51.3	57.5	46.9	51.0	56.5	62.0
	LWB	35.4	41.1	46.9	53.2	38.3	44.1	49.9	56.6	42.3	48.5	54.3	60.5
65	TCG	56.1	60.6	65.2	69.6	58.7	62.6	66.7	71.1	63.3	65.3	68.9	71.8
	SHG	53.7	47.2	40.3	33.3	58.1	50.6	42.4	34.5	63.3	57.0	46.5	36.1
	TC	55.0	59.5	64.1	68.5	57.4	61.3	65.4	69.8	61.6	63.6	67.3	70.1
	kW	4.16	4.21	4.27	4.34	4.24	4.28	4.34	4.42	4.41	4.43	4.48	4.53
	CMP	3.61	3.66	3.72	3.79	3.64	3.68	3.74	3.81	3.70	3.72	3.77	3.82
	LDB	37.2	42.5	48.1	53.8	40.6	45.8	51.5	57.0	47.4	50.7	56.3	61.8
	LWB	36.0	41.5	47.2	53.2	38.7	44.4	50.2	56.1	42.5	48.6	54.4	60.3
75	TCG	52.8	57.3	61.9	66.3	55.4	59.3	63.7	68.0	60.3	62.1	66.1	69.4
	SHG	51.0	45.1	38.6	31.8	55.1	48.6	40.8	33.1	60.3	55.1	45.2	35.1
	TC	51.7	56.2	60.9	65.3	54.2	58.1	62.4	66.7	58.6	60.5	64.4	67.7
	kW	4.36	4.43	4.50	4.57	4.46	4.51	4.57	4.65	4.63	4.65	4.71	4.77
	CMP	3.84	3.91	3.97	4.04	3.88	3.93	4.00	4.07	3.95	3.97	4.03	4.09
	LDB	38.2	43.1	48.6	54.3	41.6	46.2	51.7	57.3	48.1	50.9	56.3	61.8
	LWB	36.8	42.1	47.7	53.7	39.3	44.9	50.6	56.4	42.8	48.9	54.6	60.4
85	TCG	49.4	54.1	58.7	63.1	52.1	56.1	60.7	64.9	57.2	58.9	63.2	66.9
	SHG	48.4	43.0	36.8	30.2	52.1	46.6	39.3	31.7	57.2	53.2	43.9	34.2
	TC	48.4	53.0	57.7	62.0	50.9	54.9	59.5	63.6	55.6	57.3	61.6	65.3
	kW	4.57	4.66	4.73	4.80	4.67	4.73	4.81	4.88	4.86	4.87	4.95	5.01
	CMP	4.07	4.15	4.22	4.29	4.12	4.18	4.26	4.33	4.21	4.22	4.30	4.36
	LDB	39.1	43.7	49.1	54.8	42.6	46.6	52.0	57.6	48.8	51.1	56.3	61.7
	LWB	37.6	42.8	48.3	54.1	40.0	45.4	50.9	56.7	43.2	49.3	54.8	60.5
95	TCG	46.2	50.4	55.1	59.4	48.9	52.5	57.0	61.2	53.9	55.3	59.5	63.5
	SHG	45.8	40.7	34.9	28.6	48.9	44.3	37.4	30.1	53.9	50.8	42.0	32.7
	TC	45.2	49.4	54.1	58.4	47.7	51.3	55.8	60.1	52.3	53.8	58.0	61.9
	kW	4.78	4.87	4.96	5.03	4.88	4.96	5.04	5.11	5.09	5.10	5.18	5.25
	CMP	4.30	4.39	4.48	4.55	4.36	4.44	4.51	4.59	4.47	4.48	4.56	4.63
	LDB	40.1	44.7	49.8	55.4	43.8	47.3	52.5	58.1	49.7	51.5	56.6	61.9
	LWB	38.5	43.7	49.0	54.7	40.6	46.1	51.5	57.2	43.7	49.7	55.2	60.8
105	TCG	42.9	46.8	51.4	55.7	45.7	48.6	53.2	57.4	50.3	51.5	55.6	59.7
	SHG	42.9	38.4	32.9	27.0	45.7	41.8	35.4	28.5	50.3	48.4	40.1	31.2
	TC	41.9	45.8	50.5	54.7	44.5	47.5	52.1	56.3	48.8	50.0	54.1	58.2
	kW	4.98	5.07	5.18	5.26	5.09	5.16	5.27	5.35	5.30	5.32	5.40	5.48
	CMP	4.52	4.62	4.73	4.81	4.59	4.66	4.77	4.85	4.70	4.73	4.81	4.89
	LDB	41.5	45.6	50.6	56.1	45.1	48.1	53.2	58.6	50.9	52.0	57.0	62.3
	LWB	39.4	44.6	49.8	55.4	41.3	47.0	52.2	57.8	44.2	50.3	55.7	61.2
115	TCG	39.8	43.1	47.5	51.8	42.4	44.8	49.3	53.4	46.7	47.5	51.6	55.6
	SHG	39.8	36.1	30.9	25.3	42.4	39.4	33.3	26.7	46.7	45.6	38.0	29.5
	TC	38.9	42.1	46.6	50.9	41.3	43.7	48.2	52.3	45.2	46.0	50.1	54.1
	kW	5.16	5.26	5.38	5.48	5.28	5.35	5.48	5.56	5.49	5.51	5.61	5.70
	CMP	4.73	4.82	4.95	5.05	4.81	4.87	5.00	5.09	4.93	4.95	5.05	5.14
	LDB	43.1	46.6	51.6	56.9	46.6	49.0	53.9	59.3	52.1	52.8	57.5	62.7
	LWB	40.3	45.6	50.8	56.2	42.1	47.8	53.0	58.4	44.8	50.9	56.2	61.6
125	TCG	36.7	39.4	43.5	47.8	39.1	40.9	45.1	49.3	43.0	43.4	47.4	51.3
	SHG	36.7	33.8	28.8	23.6	39.1	36.9	31.1	25.0	43.0	42.6	35.8	27.7
	TC	35.8	38.4	42.6	46.9	38.1	39.8	44.0	48.3	41.6	42.0	46.0	49.9
	kW	5.34	5.42	5.56	5.68	5.45	5.51	5.65	5.76	5.66	5.67	5.80	5.90
	CMP	4.93	5.01	5.15	5.27	5.00	5.06	5.20	5.31	5.13	5.14	5.27	5.37
	LDB	44.8	47.7	52.6	57.8	48.1	50.0	54.8	60.0	53.4	53.7	58.0	63.2
	LWB	41.2	46.7	51.8	57.0	42.9	48.7	53.8	59.2	45.5	51.6	56.8	62.2

Rating condition.

Not recommended for long-term operation.

LEGEND

BF – Bypass Factor
CMP – Compressor
Edb – Entering Dry Bulb
Ewb – Entering Wet Bulb
kW – Total Power
LDB – Leaving Dry Bulb
LWB – Leaving Wet Bulb
SHG – Gross Sensible Capacity (1000 Btu/hour)
TC – Total Net Cooling Capacity (1000 Btu/hour)
TCG – Gross Cooling Capacity (1000 Btu/hour)

*Click here to view Systems Index Table.

NOTES:
1. Direct interpolation is permissible. Do not extrapolate.
2. The SHG is based on 80 F edb temperature of air entering indoor coil.
   Below 80 F edb, subtract (corr factor x cfm) from SHG.
   Above 80 F edb, add (corr factor x cfm) to SHG.
   Correction Factor = 1.10 x (1 - BF) x (edb - 80).

COOLING CAPACITIES (cont)

SYSTEM 11* — IN-CEILING CASSETTE SYSTEM (538ANX018 WITH 619FNX024)

Temp (F) Air Entering Condenser (Edb)		Air Entering Evaporator – Cfm/BF											
		375/0.03				415/0.03				525/0.05			
		Air Entering Evaporator – Ewb (F)											
		57	62	67	72	57	62	67	72	57	62	67	72
55	TCG	19.0	20.7	22.3	23.3	19.6	21.2	22.4	23.5	21.0	22.0	23.3	23.7
	SHG	18.2	16.1	13.7	11.2	19.3	16.9	14.0	11.3	21.0	18.5	15.2	11.7
	TC	18.6	20.4	22.0	23.0	19.3	20.9	22.1	23.2	20.6	21.6	22.9	23.3
	kW	1.33	1.35	1.36	1.37	1.35	1.36	1.37	1.39	1.39	1.40	1.42	1.42
	CMP	1.05	1.07	1.08	1.09	1.06	1.07	1.08	1.10	1.07	1.08	1.10	1.10
	LDB	37.1	42.2	47.9	54.1	39.1	44.3	50.4	56.2	44.8	49.2	54.8	60.8
	LWB	36.0	41.3	47.0	53.5	37.7	43.1	49.2	55.5	41.2	47.1	52.9	59.4
65	TCG	17.8	19.6	21.3	22.7	18.4	20.1	21.9	23.2	20.1	21.2	22.8	23.7
	SHG	17.4	15.5	13.3	10.9	18.4	16.3	13.8	11.2	20.1	18.3	15.1	11.7
	TC	17.4	19.2	21.0	22.4	18.0	19.7	21.5	22.8	19.7	20.8	22.3	23.2
	kW	1.41	1.44	1.46	1.48	1.43	1.45	1.48	1.49	1.48	1.50	1.52	1.53
	CMP	1.14	1.17	1.18	1.20	1.15	1.17	1.19	1.21	1.17	1.19	1.21	1.22
	LDB	38.3	43.0	48.4	54.2	40.2	44.9	50.3	56.1	45.7	48.9	54.4	60.3
	LWB	37.2	42.2	47.6	53.6	38.7	43.9	49.3	55.4	41.6	47.4	53.0	59.1
75	TCG	16.6	18.2	20.0	21.7	17.3	18.7	20.6	22.1	19.0	19.8	21.5	22.8
	SHG	16.5	14.7	12.6	10.4	17.3	15.5	13.2	10.7	19.0	17.6	14.6	11.4
	TC	16.3	17.9	19.7	21.4	16.9	18.4	20.2	21.8	18.5	19.4	21.1	22.4
	kW	1.47	1.51	1.54	1.57	1.50	1.53	1.56	1.59	1.56	1.58	1.60	1.63
	CMP	1.21	1.24	1.28	1.31	1.22	1.25	1.29	1.31	1.26	1.27	1.30	1.33
	LDB	39.9	44.2	49.3	54.8	42.0	46.0	51.1	56.6	47.1	49.6	54.8	60.5
	LWB	38.3	43.4	48.6	54.3	39.7	45.0	50.2	56.0	42.4	48.2	53.6	59.4
85	TCG	15.5	16.9	18.8	20.7	16.2	17.4	19.3	21.1	17.8	18.4	20.2	21.9
	SHG	15.5	13.9	12.0	9.98	16.2	14.7	12.6	10.3	17.8	16.8	14.1	11.1
	TC	15.2	16.6	18.5	20.3	15.8	17.0	18.9	20.7	17.3	18.0	19.8	21.5
	kW	1.54	1.58	1.62	1.66	1.57	1.60	1.65	1.68	1.64	1.65	1.69	1.72
	CMP	1.28	1.32	1.37	1.41	1.30	1.33	1.38	1.41	1.34	1.36	1.40	1.43
	LDB	41.5	45.5	50.3	55.5	43.7	47.0	51.9	57.2	48.6	50.3	55.3	60.6
	LWB	39.4	44.7	49.6	54.9	40.6	46.1	51.1	56.5	43.1	49.1	54.2	59.7
95	TCG	14.5	15.6	17.3	19.2	15.1	16.0	17.8	19.7	16.6	16.9	18.7	20.6
	SHG	14.5	13.2	11.3	9.38	15.1	13.9	11.9	9.74	16.6	15.9	13.4	10.6
	TC	14.2	15.3	17.0	18.9	14.8	15.7	17.4	19.4	16.1	16.5	18.3	20.1
	kW	1.59	1.63	1.68	1.74	1.62	1.65	1.70	1.76	1.69	1.71	1.76	1.81
	CMP	1.34	1.38	1.43	1.49	1.36	1.39	1.45	1.50	1.41	1.42	1.47	1.52
	LDB	43.3	46.7	51.5	56.5	45.5	48.2	53.0	58.0	50.2	51.3	56.0	61.1
	LWB	40.4	45.9	50.8	55.9	41.5	47.2	52.2	57.3	43.9	50.0	55.1	60.3
105	TCG	13.5	14.3	15.9	17.7	14.0	14.7	16.3	18.2	15.4	15.5	17.1	19.0
	SHG	13.5	12.4	10.6	8.75	14.0	13.2	11.2	9.12	15.4	15.1	12.6	10.0
	TC	13.2	14.0	15.6	17.4	13.7	14.3	16.0	17.8	15.0	15.1	16.7	18.6
	kW	1.63	1.67	1.73	1.79	1.67	1.69	1.75	1.82	1.74	1.75	1.81	1.87
	CMP	1.39	1.43	1.49	1.55	1.41	1.44	1.50	1.57	1.46	1.47	1.53	1.60
	LDB	45.2	47.9	52.7	57.7	47.3	49.3	54.1	59.0	51.8	52.3	57.0	61.8
	LWB	41.4	47.1	52.0	57.0	42.4	48.3	53.3	58.4	44.7	50.8	55.9	61.0
115	TCG	12.5	13.1	14.6	16.3	13.0	13.4	14.9	16.6	14.2	14.3	15.6	17.4
	SHG	12.5	11.7	9.98	8.16	13.0	12.5	10.5	8.50	14.2	14.1	11.9	9.40
	TC	12.2	12.8	14.3	16.0	12.7	13.1	14.6	16.3	13.8	13.9	15.2	17.0
	kW	1.66	1.69	1.76	1.83	1.70	1.71	1.78	1.85	1.77	1.78	1.84	1.91
	CMP	1.43	1.46	1.52	1.59	1.45	1.47	1.54	1.61	1.51	1.51	1.57	1.64
	LDB	47.2	49.2	53.9	58.8	49.1	50.5	55.2	60.1	53.5	53.7	57.8	62.7
	LWB	42.4	48.2	53.2	58.2	43.4	49.4	54.4	59.4	45.5	51.6	56.8	61.9
125	TCG	11.5	11.8	13.2	14.8	12.0	12.1	13.5	15.1	13.0	13.1	14.1	15.8
	SHG	11.5	11.0	9.33	7.56	12.0	11.7	9.85	7.89	13.0	13.1	11.2	8.76
	TC	11.2	11.5	12.9	14.5	11.7	11.8	13.2	14.8	12.7	12.7	13.7	15.4
	kW	1.69	1.71	1.79	1.86	1.73	1.74	1.81	1.89	1.81	1.81	1.86	1.94
	CMP	1.47	1.49	1.56	1.64	1.49	1.50	1.57	1.65	1.55	1.55	1.60	1.68
	LDB	49.2	50.4	55.1	60.0	51.0	51.6	56.3	61.1	55.1	55.1	58.7	63.6
	LWB	43.4	49.4	54.3	59.3	44.3	50.5	55.4	60.4	46.3	52.4	57.7	62.7

Rating condition.

Not recommended for long-term operation.

LEGEND

BF – Bypass Factor
CMP – Compressor
Edb – Entering Dry Bulb
Ewb – Entering Wet Bulb
kW – Total Power
LDB – Leaving Dry Bulb
LWB – Leaving Wet Bulb
SHG – Gross Sensible Capacity (1000 Btu/hour)
TC – Total Net Cooling Capacity (1000 Btu/hour)
TCG – Gross Cooling Capacity (1000 Btu/hour)

*Click here to view Systems Index Table.

NOTES:
1. Direct interpolation is permissible. Do not extrapolate.
2. The SHG is based on 80 F edb temperature of air entering indoor coil.
   Below 80 F edb, subtract (corr factor x cfm) from SHG.
   Above 80 F edb, add (corr factor x cfm) to SHG.
   Correction Factor = 1.10 x (1 - BF) x (edb - 80).

COOLING CAPACITIES (cont)

SYSTEM 12* — IN-CEILING CASSETTE SYSTEM (538ANX024 WITH 619FNX036)

Temp (F) Air Entering Condenser (Edb)		Air Entering Evaporator – Cfm/BF											
		635/0.08				745/0.10				915/0.12			
		Air Entering Evaporator – Ewb (F)											
		57	62	67	72	57	62	67	72	57	62	67	72
55	TCG	26.7	28.5	30.1	31.7	28.0	29.2	30.9	32.1	29.4	29.9	31.8	33.0
	SHG	26.7	23.7	19.4	15.5	28.0	25.3	20.6	16.0	29.4	27.3	22.1	16.8
	TC	26.3	28.0	29.6	31.2	27.4	28.7	30.4	31.6	28.8	29.2	31.2	32.3
	kW	2.14	2.15	2.16	2.18	2.18	2.19	2.20	2.21	2.24	2.24	2.26	2.27
	CMP	1.71	1.72	1.73	1.75	1.72	1.73	1.74	1.75	1.73	1.73	1.75	1.76
	LDB	45.2	49.1	54.9	60.0	49.0	52.0	57.3	62.5	53.5	55.5	60.3	65.1
	LWB	41.3	47.0	52.9	58.8	43.3	49.2	54.9	60.9	45.5	51.6	57.1	62.9
65	TCG	25.2	26.7	29.0	30.4	26.5	27.5	29.7	31.1	27.9	28.4	30.3	31.9
	SHG	25.2	22.6	19.0	15.0	26.5	24.4	20.2	15.6	27.9	26.7	21.6	16.5
	TC	24.8	26.2	28.6	30.0	26.0	27.0	29.2	30.6	27.3	27.7	29.6	31.3
	kW	2.16	2.16	2.18	2.19	2.19	2.20	2.22	2.23	2.25	2.25	2.27	2.29
	CMP	1.76	1.77	1.79	1.80	1.77	1.78	1.80	1.81	1.78	1.78	1.80	1.82
	LDB	45.8	49.3	54.3	59.9	49.5	51.9	56.8	62.2	53.9	55.0	59.9	64.8
	LWB	41.7	47.4	52.8	58.8	43.5	49.5	54.9	60.8	45.7	51.7	57.2	62.8
75	TCG	23.5	24.8	27.1	28.7	24.8	25.6	27.8	29.4	26.2	26.5	28.4	30.3
	SHG	23.5	21.5	18.0	14.2	24.8	23.2	19.2	14.9	26.2	25.5	20.8	15.9
	TC	23.1	24.4	26.7	28.3	24.3	25.1	27.3	28.9	25.6	25.9	27.8	29.7
	kW	2.15	2.16	2.18	2.19	2.19	2.19	2.21	2.23	2.24	2.24	2.26	2.28
	CMP	1.79	1.80	1.82	1.83	1.80	1.81	1.83	1.84	1.81	1.82	1.83	1.85
	LDB	46.8	49.7	54.7	60.1	50.2	52.1	57.0	62.3	54.5	55.1	59.9	64.7
	LWB	42.2	47.9	53.3	59.1	43.9	49.9	55.2	60.9	46.0	52.0	57.4	62.9
85	TCG	21.9	23.0	25.1	27.0	23.1	23.7	25.8	27.8	24.5	24.7	26.6	28.6
	SHG	21.9	20.3	17.0	13.5	23.1	22.0	18.2	14.3	24.5	24.3	19.9	15.3
	TC	21.5	22.6	24.7	26.6	22.6	23.3	25.4	27.3	23.9	24.1	26.0	28.0
	kW	2.14	2.16	2.17	2.19	2.18	2.18	2.20	2.22	2.22	2.23	2.24	2.27
	CMP	1.82	1.83	1.85	1.87	1.84	1.84	1.86	1.88	1.84	1.85	1.86	1.89
	LDB	47.7	50.1	55.1	60.3	51.0	52.4	57.2	62.3	55.1	55.3	59.8	64.6
	LWB	42.7	48.4	53.7	59.3	44.3	50.3	55.6	61.1	46.3	52.3	57.7	63.1
95	TCG	20.2	21.1	23.2	25.1	21.4	21.8	23.8	25.8	22.7	22.8	24.5	26.6
	SHG	20.2	19.0	16.0	12.7	21.4	20.7	17.1	13.4	22.7	22.7	18.9	14.5
	TC	19.9	20.7	22.8	24.7	20.9	21.3	23.4	25.3	22.2	22.2	24.0	26.0
	kW	2.10	2.11	2.13	2.15	2.13	2.14	2.16	2.18	2.18	2.18	2.20	2.23
	CMP	1.82	1.83	1.85	1.87	1.83	1.84	1.85	1.88	1.85	1.85	1.86	1.89
	LDB	48.8	50.7	55.5	60.7	52.0	52.9	57.6	62.6	55.8	55.8	60.0	64.8
	LWB	43.2	49.0	54.2	59.7	44.8	50.8	56.0	61.5	46.6	52.7	58.0	63.3
105	TCG	18.6	19.3	21.3	23.2	19.7	19.9	21.9	23.8	20.9	20.9	22.5	24.5
	SHG	18.6	17.7	14.9	11.9	19.7	19.3	16.1	12.5	20.9	20.9	17.7	13.6
	TC	18.3	18.9	20.9	22.9	19.3	19.5	21.4	23.3	20.4	20.4	22.0	24.0
	kW	2.03	2.04	2.07	2.09	2.06	2.07	2.09	2.11	2.11	2.11	2.12	2.15
	CMP	1.78	1.79	1.82	1.84	1.80	1.80	1.83	1.84	1.81	1.81	1.83	1.86
	LDB	49.8	51.4	56.0	61.0	52.9	53.5	58.0	63.0	56.6	56.6	60.3	65.0
	LWB	43.7	49.7	54.8	60.1	45.2	51.3	56.5	61.8	47.0	53.1	58.4	63.7
115	TCG	17.1	17.6	19.4	21.3	18.1	18.2	19.9	21.8	19.2	19.2	20.5	22.4
	SHG	17.1	16.5	13.8	11.0	18.1	17.9	15.0	11.7	19.2	19.2	16.6	12.7
	TC	16.8	17.3	19.1	21.0	17.7	17.8	19.5	21.4	18.7	18.7	20.0	21.9
	kW	1.89	1.90	1.93	1.96	1.93	1.93	1.95	1.98	1.97	1.97	1.99	2.01
	CMP	1.68	1.69	1.72	1.75	1.70	1.70	1.73	1.75	1.72	1.72	1.74	1.76
	LDB	50.9	52.0	56.7	61.5	53.9	54.2	58.5	63.4	57.5	57.5	60.7	65.4
	LWB	44.2	50.3	55.4	60.6	45.7	51.8	57.0	62.3	47.4	53.4	58.8	64.0
125	TCG	15.6	15.9	17.5	19.4	16.5	16.5	18.0	19.8	17.5	17.5	18.5	20.4
	SHG	15.6	15.3	12.8	10.1	16.5	16.5	13.8	10.8	17.5	17.5	15.4	11.8
	TC	15.3	15.6	17.2	19.0	16.1	16.1	17.6	19.4	17.0	17.0	18.1	19.9
	kW	1.76	1.77	1.80	1.83	1.79	1.79	1.82	1.84	1.83	1.83	1.85	1.87
	CMP	1.59	1.59	1.62	1.65	1.60	1.60	1.63	1.66	1.62	1.62	1.64	1.67
	LDB	52.0	52.7	57.3	62.1	54.9	54.9	59.0	63.8	58.4	58.4	61.1	65.7
	LWB	44.8	50.9	56.0	61.2	46.2	52.3	57.5	62.7	47.8	53.8	59.2	64.4

Rating condition.

Not recommended for long-term operation.

LEGEND

BF – Bypass Factor
CMP – Compressor
Edb – Entering Dry Bulb
Ewb – Entering Wet Bulb
kW – Total Power
LDB – Leaving Dry Bulb
LWB – Leaving Wet Bulb
SHG – Gross Sensible Capacity (1000 Btu/hour)
TC – Total Net Cooling Capacity (1000 Btu/hour)
TCG – Gross Cooling Capacity (1000 Btu/hour)

*Click here to view Systems Index Table.

NOTES:
1. Direct interpolation is permissible. Do not extrapolate.
2. The SHG is based on 80 F edb temperature of air entering indoor coil.
   Below 80 F edb, subtract (corr factor x cfm) from SHG.
   Above 80 F edb, add (corr factor x cfm) to SHG.
   Correction Factor = 1.10 x (1 - BF) x (edb - 80).

COOLING CAPACITIES (cont)

SYSTEM 13* — IN-CEILING CASSETTE SYSTEM (538ANX030 WITH 619FNX036)

Temp (F) Air Entering Condenser (Edb)		Air Entering Evaporator – Cfm/BF											
		635/0.08				745/0.10				915/0.12			
		Air Entering Evaporator – Ewb (F)											
		57	62	67	72	57	62	67	72	57	62	67	72
55	TCG	33.1	35.7	38.1	39.2	34.6	36.8	38.8	39.4	36.5	37.7	39.0	40.2
	SHG	32.7	28.6	24.0	19.0	34.6	30.5	25.0	19.3	36.5	32.8	26.0	20.1
	TC	32.6	35.2	37.6	38.7	34.0	36.2	38.2	38.8	35.8	36.9	38.3	39.5
	kW	2.10	2.13	2.15	2.16	2.14	2.16	2.18	2.19	2.19	2.21	2.22	2.24
	CMP	1.77	1.79	1.81	1.83	1.78	1.80	1.82	1.83	1.80	1.81	1.82	1.84
	LDB	41.5	46.4	52.0	57.9	45.3	49.5	55.1	60.9	50.3	53.3	59.1	63.9
	LWB	39.2	44.6	50.5	57.0	41.4	47.1	53.0	59.5	44.0	49.9	55.9	61.9
65	TCG	30.8	33.4	36.0	38.1	32.6	34.5	37.0	38.7	34.5	35.7	38.0	39.1
	SHG	30.7	27.1	22.8	18.5	32.6	29.2	24.2	19.1	34.5	31.9	25.9	19.7
	TC	30.3	33.0	35.5	37.6	32.0	34.0	36.5	38.1	33.8	35.0	37.3	38.4
	kW	2.28	2.31	2.34	2.36	2.33	2.34	2.37	2.40	2.38	2.39	2.43	2.44
	CMP	1.95	1.98	2.01	2.03	1.98	1.99	2.02	2.04	1.99	2.00	2.03	2.05
	LDB	42.2	46.6	52.0	57.5	45.8	49.5	54.8	60.3	50.6	52.9	58.1	63.5
	LWB	39.7	45.0	50.7	56.7	41.7	47.4	53.0	59.1	44.1	50.0	55.6	61.7
75	TCG	28.6	30.9	33.6	36.0	30.3	32.0	34.6	36.6	32.2	33.2	35.6	37.4
	SHG	28.5	25.4	21.6	17.5	30.3	27.5	22.9	18.2	32.2	30.3	24.7	19.1
	TC	28.1	30.5	33.2	35.5	29.7	31.5	34.1	36.1	31.6	32.5	35.0	36.7
	kW	2.48	2.52	2.56	2.59	2.54	2.56	2.59	2.63	2.60	2.62	2.65	2.68
	CMP	2.16	2.19	2.23	2.27	2.19	2.21	2.25	2.28	2.21	2.23	2.26	2.29
	LDB	43.2	47.2	52.3	57.7	46.8	49.9	55.0	60.3	51.3	53.0	58.1	63.2
	LWB	40.3	45.7	51.1	56.9	42.2	47.9	53.3	59.2	44.4	50.4	55.9	61.6
85	TCG	26.3	28.4	31.2	33.8	27.9	29.5	32.2	34.6	29.9	30.7	33.2	35.6
	SHG	26.3	23.7	20.3	16.5	27.9	25.8	21.6	17.3	29.9	28.6	23.5	18.4
	TC	25.9	28.0	30.8	33.4	27.4	29.0	31.7	34.1	29.3	30.1	32.6	35.0
	kW	2.68	2.73	2.78	2.82	2.74	2.77	2.82	2.85	2.82	2.84	2.87	2.91
	CMP	2.36	2.41	2.46	2.50	2.40	2.43	2.47	2.51	2.44	2.45	2.49	2.53
	LDB	44.3	47.8	52.6	57.8	47.8	50.3	55.1	60.3	51.9	53.2	58.1	63.0
	LWB	40.9	46.3	51.5	57.0	42.7	48.4	53.7	59.3	44.8	50.7	56.1	61.6
95	TCG	24.2	25.9	28.6	31.3	25.6	26.9	29.6	32.1	27.4	28.0	30.6	33.0
	SHG	24.2	22.0	18.8	15.3	25.6	23.9	20.2	16.2	27.4	26.6	22.1	17.2
	TC	23.8	25.5	28.2	30.8	25.1	26.4	29.1	31.7	26.8	27.4	30.0	32.4
	kW	2.92	2.96	3.03	3.08	2.98	3.01	3.07	3.12	3.06	3.07	3.12	3.17
	CMP	2.60	2.64	2.71	2.76	2.64	2.67	2.73	2.78	2.68	2.69	2.75	2.79
	LDB	45.4	48.5	53.3	58.3	48.8	50.9	55.6	60.5	52.9	53.7	58.3	63.2
	LWB	41.4	47.0	52.1	57.5	43.2	49.0	54.2	59.6	45.2	51.2	56.4	61.9
105	TCG	22.1	23.5	25.9	28.6	23.4	24.3	26.8	29.4	25.1	25.4	27.8	30.2
	SHG	22.1	20.3	17.3	14.1	23.4	22.1	18.6	14.9	25.1	24.6	20.5	16.0
	TC	21.8	23.1	25.6	28.2	23.0	23.9	26.4	28.9	24.5	24.8	27.2	29.7
	kW	3.18	3.22	3.29	3.36	3.24	3.26	3.34	3.40	3.32	3.33	3.40	3.45
	CMP	2.87	2.91	2.98	3.05	2.90	2.93	3.00	3.06	2.95	2.96	3.03	3.08
	LDB	46.5	49.3	54.0	58.8	49.8	51.6	56.2	61.0	53.8	54.3	58.7	63.5
	LWB	42.0	47.7	52.8	58.0	43.7	49.6	54.8	60.0	45.7	51.7	56.9	62.2
115	TCG	20.2	21.3	23.5	25.9	21.4	22.0	24.2	26.6	22.8	23.0	25.1	27.4
	SHG	20.2	18.8	15.9	12.9	21.4	20.4	17.1	13.7	22.8	22.6	18.9	14.8
	TC	19.8	20.9	23.1	25.5	21.0	21.6	23.8	26.2	22.3	22.4	24.6	26.9
	kW	3.49	3.53	3.59	3.68	3.55	3.57	3.64	3.72	3.63	3.64	3.71	3.78
	CMP	3.19	3.22	3.29	3.37	3.22	3.24	3.31	3.39	3.27	3.27	3.34	3.41
	LDB	47.7	50.0	54.7	59.5	50.9	52.2	56.8	61.6	54.8	55.1	59.2	63.9
	LWB	42.6	48.4	53.5	58.7	44.2	50.2	55.4	60.6	46.1	52.2	57.4	62.7
125	TCG	18.3	19.1	21.0	23.2	19.3	19.7	21.7	23.9	20.6	20.6	22.4	24.7
	SHG	18.3	17.2	14.5	11.7	19.3	18.7	15.6	12.4	20.6	20.6	17.3	13.5
	TC	17.9	18.7	20.7	22.9	18.9	19.3	21.3	23.5	20.1	20.1	21.9	24.2
	kW	3.81	3.83	3.90	3.99	3.86	3.88	3.95	4.04	3.94	3.94	4.01	4.11
	CMP	3.50	3.53	3.60	3.69	3.54	3.55	3.63	3.71	3.58	3.58	3.65	3.75
	LDB	48.8	50.7	55.4	60.2	52.0	52.9	57.4	62.2	55.8	55.8	59.7	64.3
	LWB	43.2	49.1	54.2	59.4	44.8	50.8	56.0	61.2	46.6	52.7	57.9	63.1

Rating condition.

Not recommended for long-term operation.

LEGEND

BF – Bypass Factor
CMP – Compressor
Edb – Entering Dry Bulb
Ewb – Entering Wet Bulb
kW – Total Power
LDB – Leaving Dry Bulb
LWB – Leaving Wet Bulb
SHG – Gross Sensible Capacity (1000 Btu/hour)
TC – Total Net Cooling Capacity (1000 Btu/hour)
TCG – Gross Cooling Capacity (1000 Btu/hour)

*Click here to view Systems Index Table.

NOTES:
1. Direct interpolation is permissible. Do not extrapolate.
2. The SHG is based on 80 F edb temperature of air entering indoor coil.
   Below 80 F edb, subtract (corr factor x cfm) from SHG.
   Above 80 F edb, add (corr factor x cfm) to SHG.
   Correction Factor = 1.10 x (1 - BF) x (edb - 80).

COOLING CAPACITIES (cont)

SYSTEM 14* — IN-CEILING CASSETTE SYSTEM (538ANX, APX, AEX036 WITH 619FNX036)

Temp (F) Air Entering Condenser (Edb)		Air Entering Evaporator – Cfm/BF											
		635/0.02				745/0.03				915/0.04			
		Air Entering Evaporator – Ewb (F)											
		57	62	67	72	57	62	67	72	57	62	67	72
55	TCG	37.5	39.3	40.8	41.7	38.9	40.6	41.8	42.6	40.1	41.3	42.5	43.7
	SHG	35.9	30.6	25.3	20.2	38.4	32.7	26.4	20.8	40.1	34.8	27.7	21.7
	TC	37.0	38.8	40.3	41.2	38.3	40.1	41.3	42.0	39.4	40.6	41.8	43.0
	kW	2.08	2.10	2.12	2.13	2.12	2.14	2.16	2.17	2.17	2.18	2.20	2.22
	CMP	1.77	1.79	1.81	1.82	1.78	1.80	1.82	1.83	1.80	1.81	1.83	1.84
	LDB	37.6	44.0	50.3	56.4	41.3	47.2	53.6	59.3	47.3	51.7	57.6	62.6
	LWB	36.2	42.5	48.9	55.8	39.1	45.2	51.7	58.2	42.4	48.6	54.7	60.8
65	TCG	35.1	37.4	39.0	40.9	36.5	38.4	39.6	41.1	38.2	39.1	40.2	41.4
	SHG	33.9	29.4	24.3	19.7	36.4	31.3	25.2	20.1	38.2	33.5	26.5	20.6
	TC	34.6	36.9	38.6	40.4	36.0	37.8	39.0	40.6	37.5	38.4	39.5	40.7
	kW	2.28	2.31	2.33	2.36	2.32	2.34	2.36	2.38	2.37	2.39	2.40	2.42
	CMP	1.97	2.00	2.02	2.05	1.99	2.01	2.03	2.05	2.01	2.02	2.04	2.06
	LDB	37.9	43.6	50.0	55.7	41.5	47.0	53.5	59.0	47.3	51.3	57.4	62.6
	LWB	36.7	42.4	48.8	55.1	39.4	45.3	51.8	58.0	42.4	48.6	54.8	60.9
75	TCG	32.6	34.9	36.8	38.6	34.1	35.9	37.5	39.2	35.8	36.5	38.2	39.4
	SHG	31.9	27.7	23.1	18.7	34.0	29.6	24.2	19.2	35.8	31.9	25.7	19.8
	TC	32.1	34.5	36.3	38.2	33.5	35.4	36.9	38.6	35.1	35.8	37.6	38.8
	kW	2.51	2.54	2.56	2.60	2.55	2.57	2.60	2.63	2.60	2.61	2.64	2.67
	CMP	2.21	2.24	2.26	2.30	2.23	2.25	2.28	2.31	2.25	2.26	2.29	2.31
	LDB	38.3	43.8	50.0	55.8	42.1	47.0	53.2	58.9	47.7	51.2	56.9	62.4
	LWB	37.2	42.8	49.0	55.2	39.7	45.6	51.8	57.9	42.6	48.9	54.8	60.8
85	TCG	30.1	32.5	34.5	36.4	31.6	33.4	35.4	37.2	33.4	33.9	36.2	37.4
	SHG	29.9	26.1	21.8	17.6	31.6	28.0	23.1	18.3	33.4	30.2	24.8	19.0
	TC	29.7	32.0	34.0	36.0	31.1	32.9	34.9	36.7	32.8	33.3	35.6	36.8
	kW	2.74	2.76	2.80	2.83	2.77	2.80	2.83	2.87	2.83	2.84	2.88	2.91
	CMP	2.45	2.47	2.51	2.54	2.46	2.49	2.52	2.56	2.49	2.49	2.54	2.57
	LDB	38.7	44.0	50.0	55.9	42.8	47.1	53.0	58.7	48.1	51.2	56.4	62.1
	LWB	37.7	43.2	49.2	55.3	40.1	45.9	51.8	57.9	42.8	49.2	54.7	60.8
95	TCG	27.4	29.6	31.6	33.4	29.0	30.7	32.6	33.9	30.7	31.6	33.6	34.5
	SHG	27.4	24.1	20.2	16.2	29.0	26.1	21.6	16.8	30.7	28.8	23.4	17.7
	TC	27.0	29.2	31.2	33.0	28.6	30.2	32.1	33.4	30.1	31.0	33.0	33.9
	kW	2.98	3.01	3.05	3.09	3.02	3.05	3.09	3.12	3.08	3.10	3.14	3.17
	CMP	2.70	2.73	2.76	2.80	2.72	2.75	2.78	2.81	2.74	2.76	2.81	2.83
	LDB	39.8	44.7	50.5	56.4	43.8	47.4	53.2	59.2	48.9	50.8	56.4	62.3
	LWB	38.5	43.9	49.7	55.8	40.6	46.4	52.2	58.4	43.2	49.3	54.9	61.1
105	TCG	24.8	26.7	28.7	30.4	26.4	27.7	29.7	31.0	28.1	28.7	30.6	31.6
	SHG	24.8	22.1	18.6	14.8	26.4	24.1	19.9	15.5	28.1	26.8	21.8	16.4
	TC	24.4	26.3	28.4	30.0	25.9	27.3	29.3	30.6	27.6	28.2	30.1	31.0
	kW	3.24	3.26	3.31	3.35	3.28	3.31	3.35	3.39	3.35	3.36	3.41	3.43
	CMP	2.97	2.99	3.03	3.07	2.98	3.01	3.06	3.09	3.02	3.03	3.08	3.11
	LDB	41.2	45.5	51.1	57.1	45.0	48.0	53.6	59.6	49.7	51.1	56.6	62.6
	LWB	39.3	44.8	50.4	56.5	41.2	47.1	52.7	58.8	43.6	49.8	55.3	61.4
115	TCG	22.3	23.9	26.0	27.3	23.7	24.7	26.6	27.9	25.4	25.7	27.6	28.6
	SHG	22.3	20.2	17.0	13.5	23.7	22.0	18.2	14.1	25.4	24.6	20.1	15.1
	TC	21.9	23.5	25.6	27.0	23.3	24.3	26.2	27.5	24.9	25.2	27.1	28.1
	kW	3.51	3.53	3.58	3.62	3.55	3.57	3.62	3.66	3.62	3.63	3.68	3.71
	CMP	3.24	3.26	3.31	3.35	3.26	3.28	3.33	3.37	3.30	3.31	3.36	3.39
	LDB	42.8	46.3	51.7	57.8	46.3	48.8	54.3	60.2	50.7	51.6	57.0	62.8
	LWB	40.1	45.7	51.1	57.2	41.9	47.9	53.4	59.4	44.2	50.3	55.8	61.8
125	TCG	19.9	21.0	22.7	24.5	21.1	21.8	23.7	25.0	22.7	22.7	24.5	25.7
	SHG	19.9	18.2	15.2	12.2	21.1	20.0	16.5	12.8	22.7	22.3	18.3	13.8
	TC	19.6	20.7	22.4	24.2	20.7	21.4	23.3	24.6	22.2	22.3	24.0	25.2
	kW	3.75	3.79	3.83	3.90	3.82	3.84	3.89	3.94	3.90	3.90	3.96	4.00
	CMP	3.49	3.53	3.57	3.64	3.54	3.56	3.61	3.66	3.59	3.59	3.65	3.69
	LDB	44.3	47.4	52.9	58.4	47.8	49.6	54.9	60.7	51.9	52.3	57.4	63.2
	LWB	40.9	46.7	52.2	57.8	42.7	48.7	54.1	59.9	44.7	51.0	56.4	62.2

Rating condition.

Not recommended for long-term operation.

LEGEND

BF – Bypass Factor
CMP – Compressor
Edb – Entering Dry Bulb
Ewb – Entering Wet Bulb
kW – Total Power
LDB – Leaving Dry Bulb
LWB – Leaving Wet Bulb
SHG – Gross Sensible Capacity (1000 Btu/hour)
TC – Total Net Cooling Capacity (1000 Btu/hour)
TCG – Gross Cooling Capacity (1000 Btu/hour)

*Click here to view Systems Index Table.

NOTES:
1. Direct interpolation is permissible. Do not extrapolate.
2. The SHG is based on 80 F edb temperature of air entering indoor coil.
   Below 80 F edb, subtract (corr factor x cfm) from SHG.
   Above 80 F edb, add (corr factor x cfm) to SHG.
   Correction Factor = 1.10 x (1 - BF) x (edb - 80).

COOLING CAPACITIES

SYSTEM 15C* — HIGH WALL SYSTEM (538DAX009 WITH 619EAX009)

TEMP (F) AIR ENTERING OUTDOOR UNIT (Edb)		AIR ENTERING INDOOR UNIT – CFM/BF											
		214/0.10				233/0.11				252/0.12			
		Air Entering Indoor Unit – Ewb (F)											
		57	62	67	72	57	62	67	72	57	62	67	72
55	TCG	8.57	8.95	9.57	9.71	8.79	9.04	9.60	10.0	8.97	9.07	9.61	9.94
	SHG	8.49	7.17	6.05	4.74	8.79	7.36	6.13	4.91	8.97	7.48	6.20	4.91
	TC	8.52	8.89	9.52	9.65	8.72	8.97	9.53	9.95	8.90	9.00	9.54	9.87
	kW	0.61	0.62	0.63	0.64	0.62	0.62	0.63	0.65	0.62	0.62	0.64	0.65
	CMP	0.51	0.52	0.54	0.54	0.52	0.52	0.54	0.55	0.52	0.52	0.54	0.55
	LDB	43.0	48.8	53.7	59.5	44.9	50.6	55.6	60.5	46.8	52.4	57.2	62.0
	LWB	40.0	46.1	51.8	58.4	41.2	47.4	53.2	59.3	42.2	48.7	54.4	60.5
65	TCG	8.42	8.85	9.59	10.0	8.65	8.97	9.67	10.1	8.83	9.07	9.73	10.0
	SHG	8.42	7.21	6.13	4.90	8.65	7.44	6.27	4.95	8.83	7.67	6.39	4.96
	TC	8.36	8.79	9.53	9.97	8.58	8.90	9.61	10.0	8.76	9.00	9.66	9.93
	kW	0.68	0.69	0.71	0.72	0.69	0.70	0.72	0.73	0.69	0.70	0.72	0.73
	CMP	0.58	0.59	0.62	0.63	0.59	0.60	0.62	0.63	0.59	0.60	0.62	0.63
	LDB	43.3	48.7	53.4	58.8	45.4	50.3	55.0	60.3	47.4	51.7	56.5	61.8
	LWB	40.4	46.3	51.8	57.9	41.5	47.6	53.1	59.2	42.5	48.7	54.2	60.4
75	TCG	8.25	8.64	9.42	9.92	8.45	8.78	9.54	9.94	8.65	8.89	9.65	9.94
	SHG	8.25	7.16	6.09	4.86	8.45	7.44	6.27	4.91	8.65	7.69	6.45	4.96
	TC	8.19	8.58	9.36	9.86	8.38	8.71	9.48	9.87	8.58	8.82	9.58	9.87
	kW	0.76	0.77	0.80	0.81	0.77	0.78	0.80	0.81	0.78	0.78	0.81	0.81
	CMP	0.67	0.68	0.70	0.71	0.67	0.68	0.70	0.71	0.68	0.68	0.71	0.71
	LDB	44.1	48.8	53.6	58.9	46.2	50.3	55.0	60.5	48.1	51.6	56.2	61.8
	LWB	40.8	46.8	52.1	58.1	41.9	47.9	53.3	59.4	42.8	49.0	54.3	60.5
85	TCG	8.05	8.43	9.15	9.68	8.26	8.54	9.29	9.77	8.44	8.66	9.40	9.78
	SHG	8.05	7.13	6.00	4.77	8.26	7.39	6.21	4.87	8.44	7.68	6.40	4.93
	TC	7.99	8.37	9.09	9.62	8.19	8.47	9.22	9.70	8.37	8.59	9.33	9.71
	kW	0.85	0.86	0.89	0.90	0.86	0.87	0.89	0.91	0.87	0.87	0.90	0.91
	CMP	0.76	0.77	0.79	0.81	0.76	0.77	0.80	0.81	0.77	0.77	0.80	0.81
	LDB	44.9	49.0	53.9	59.3	47.0	50.5	55.3	60.6	48.8	51.7	56.4	61.9
	LWB	41.2	47.2	52.6	58.5	42.3	48.4	53.7	59.6	43.2	49.3	54.7	60.7
95	TCG	7.68	8.12	8.83	9.40	7.95	8.26	8.96	9.47	8.18	8.38	9.07	9.54
	SHG	7.68	7.02	5.88	4.67	7.95	7.32	6.09	4.77	8.18	7.62	6.29	4.86
	TC	7.62	8.06	8.77	9.34	7.89	8.19	8.89	9.41	8.11	8.31	9.00	9.47
	kW	0.95	0.96	0.99	1.01	0.96	0.97	0.99	1.01	0.97	0.97	1.00	1.01
	CMP	0.85	0.87	0.89	0.91	0.86	0.87	0.90	0.91	0.87	0.88	0.90	0.92
	LDB	46.6	49.5	54.5	59.8	48.2	50.8	55.7	61.1	49.8	51.9	56.8	62.2
	LWB	42.1	47.8	53.2	59.0	42.9	48.9	54.3	60.1	43.7	49.8	55.2	61.0
105	TCG	7.21	7.53	8.48	9.11	7.47	7.68	8.58	9.21	7.70	7.82	8.69	9.30
	SHG	7.21	6.75	5.75	4.57	7.47	7.07	5.96	4.69	7.70	7.37	6.16	4.81
	TC	7.15	7.47	8.42	9.05	7.41	7.62	8.52	9.15	7.63	7.74	8.62	9.23
	kW	1.05	1.06	1.10	1.12	1.06	1.07	1.11	1.13	1.07	1.08	1.11	1.13
	CMP	0.96	0.97	1.00	1.03	0.97	0.97	1.01	1.03	0.98	0.98	1.01	1.04
	LDB	48.6	50.7	55.0	60.2	50.2	51.8	56.3	61.4	51.6	52.8	57.3	62.4
	LWB	43.1	49.0	53.8	59.4	43.9	49.9	54.9	60.4	44.6	50.7	55.7	61.3
115	TCG	6.72	6.88	7.79	8.76	6.96	7.01	7.94	8.88	7.17	7.15	8.04	8.97
	SHG	6.72	6.45	5.47	4.45	6.96	6.75	5.70	4.59	7.17	7.04	5.91	4.71
	TC	6.66	6.82	7.73	8.70	6.89	6.95	7.87	8.81	7.10	7.08	7.97	8.90
	kW	1.17	1.17	1.21	1.25	1.18	1.18	1.22	1.26	1.19	1.19	1.23	1.27
	CMP	1.07	1.08	1.12	1.16	1.08	1.09	1.12	1.16	1.09	1.09	1.13	1.17
	LDB	50.8	52.0	56.3	60.7	52.2	53.1	57.3	61.8	53.6	54.1	58.2	62.7
	LWB	44.2	50.2	55.0	60.0	44.9	51.1	55.9	60.9	45.5	51.8	56.7	61.7
125	TCG	6.18	6.23	7.02	8.03	6.41	6.37	7.14	8.15	6.61	6.52	7.23	8.26
	SHG	6.18	6.14	5.15	4.19	6.41	6.37	5.38	4.33	6.61	6.52	5.60	4.47
	TC	6.13	6.17	6.96	7.97	6.34	6.31	7.07	8.09	6.54	6.45	7.16	8.19
	kW	1.30	1.30	1.34	1.39	1.31	1.31	1.34	1.39	1.32	1.32	1.35	1.40
	CMP	1.20	1.20	1.24	1.29	1.21	1.21	1.25	1.30	1.22	1.22	1.25	1.30
	LDB	53.1	53.3	57.7	61.9	54.4	54.6	58.6	62.8	55.6	56.0	59.4	63.6
	LWB	45.3	51.5	56.3	61.1	46.0	52.2	57.1	61.9	46.5	52.8	57.8	62.6

Rating condition.

Not recommended for long-term operation.

LEGEND

BF – Bypass Factor
CMP – Compressor
Edb – Entering Dry Bulb
Ewb – Entering Wet Bulb
kW – Total Power
LDB – Leaving Dry Bulb
LWB – Leaving Wet Bulb
SHG – Gross Sensible Capacity (1000 Btuh)
TC – Total Net Cooling Capacity (1000 Btuh)
TCG – Gross Cooling Capacity (1000 Btuh)

*Click here to view Systems Index Table.

NOTES:
1. Direct interpolation is permissible. Do not extrapolate.
2. The SHG is based on 80 F edb temperature of air entering indoor coil.
   Below 80 F edb, subtract (corr factor x cfm) from SHG.
   Above 80 F edb, add (corr factor x cfm) to SHG.
   Correction Factor = 1.10 x (1 - BF) x (edb - 80).

COOLING CAPACITIES (cont)

SYSTEM 16C* — HIGH WALL SYSTEM (538DNX012 WITH 619ENX012)

TEMP (F) AIR ENTERING OUTDOOR UNIT (Edb)		AIR ENTERING INDOOR UNIT – CFM/BF											
		245/0.12				280/0.14				302/0.15			
		Air Entering Indoor Unit – Ewb (F)											
		57	62	67	72	57	62	67	72	57	62	67	72
55	TCG	11.1	11.7	12.4	12.8	11.5	12.0	12.6	12.8	11.8	12.1	12.7	12.7
	SHG	10.5	8.95	7.61	6.21	11.2	9.36	7.79	6.23	11.6	9.57	7.92	6.24
	TC	11.1	11.6	12.3	12.7	11.5	11.9	12.5	12.7	11.7	12.0	12.6	12.6
	kW	0.76	0.77	0.78	0.78	0.77	0.77	0.78	0.78	0.78	0.78	0.79	0.79
	CMP	0.66	0.67	0.68	0.69	0.67	0.67	0.68	0.68	0.67	0.67	0.68	0.68
	LDB	39.8	45.7	50.9	56.3	42.5	48.6	54.0	59.2	44.1	50.3	55.5	60.7
	LWB	37.1	43.2	49.2	55.8	39.3	45.5	51.6	58.2	40.4	46.7	52.8	59.4
65	TCG	10.9	11.6	12.4	13.1	11.3	11.9	12.7	13.2	11.5	12.0	12.8	13.2
	SHG	10.4	8.99	7.65	6.31	11.1	9.38	7.92	6.43	11.4	9.65	8.08	6.46
	TC	10.8	11.5	12.3	13.0	11.2	11.8	12.6	13.2	11.4	11.9	12.7	13.1
	kW	0.84	0.85	0.86	0.87	0.85	0.86	0.87	0.88	0.86	0.86	0.88	0.88
	CMP	0.75	0.75	0.77	0.78	0.75	0.76	0.77	0.78	0.76	0.76	0.77	0.78
	LDB	40.1	45.6	50.7	55.9	42.9	48.6	53.5	58.6	44.4	50.0	55.0	60.1
	LWB	37.6	43.4	49.2	55.4	39.8	45.7	51.5	57.6	40.8	46.9	52.6	58.9
75	TCG	10.6	11.4	12.2	13.1	11.0	11.7	12.6	13.3	11.3	11.9	12.7	13.4
	SHG	10.2	8.92	7.59	6.30	10.9	9.39	7.93	6.46	11.3	9.69	8.11	6.55
	TC	10.5	11.3	12.2	13.0	10.9	11.6	12.5	13.2	11.2	11.8	12.6	13.3
	kW	0.94	0.95	0.96	0.98	0.95	0.95	0.97	0.99	0.95	0.96	0.97	0.99
	CMP	0.84	0.85	0.86	0.88	0.85	0.85	0.87	0.89	0.85	0.86	0.87	0.89
	LDB	40.7	45.8	51.0	55.9	43.3	48.5	53.5	58.4	44.9	49.9	54.9	59.8
	LWB	38.3	43.8	49.5	55.4	40.2	46.0	51.6	57.5	41.2	47.1	52.8	58.6
85	TCG	9.83	11.1	12.0	12.8	10.6	11.4	12.3	13.1	11.0	11.6	12.4	13.2
	SHG	9.78	8.83	7.48	6.17	10.6	9.31	7.85	6.36	11.0	9.62	8.06	6.46
	TC	9.74	11.0	11.9	12.7	10.5	11.3	12.2	13.0	10.9	11.5	12.3	13.1
	kW	1.04	1.05	1.07	1.08	1.05	1.06	1.08	1.09	1.06	1.07	1.08	1.10
	CMP	0.94	0.96	0.97	0.99	0.95	0.96	0.98	0.99	0.95	0.96	0.98	1.00
	LDB	42.5	46.2	51.4	56.5	44.6	48.8	53.8	58.8	45.9	50.1	55.0	60.0
	LWB	39.9	44.4	50.0	55.8	41.0	46.5	52.0	57.9	41.7	47.5	53.1	58.9
95	TCG	9.43	10.5	11.7	12.5	10.0	10.9	11.9	12.7	10.4	11.2	12.1	12.9
	SHG	9.43	8.52	7.36	6.02	10.0	9.12	7.72	6.23	10.4	9.49	7.95	6.34
	TC	9.35	10.4	11.6	12.4	9.91	10.8	11.8	12.6	10.3	11.1	12.0	12.8
	kW	1.15	1.16	1.19	1.20	1.16	1.18	1.19	1.21	1.17	1.18	1.20	1.21
	CMP	1.05	1.07	1.09	1.10	1.06	1.08	1.09	1.11	1.07	1.08	1.10	1.11
	LDB	43.9	47.4	51.8	57.1	46.5	49.4	54.2	59.2	47.6	50.6	55.4	60.4
	LWB	40.7	45.5	50.5	56.3	42.0	47.2	52.5	58.3	42.6	48.1	53.5	59.3
105	TCG	8.97	9.81	11.2	12.1	9.45	10.2	11.5	12.3	9.83	10.4	11.7	12.5
	SHG	8.97	8.17	7.18	5.85	9.45	8.78	7.56	6.07	9.83	9.15	7.79	6.19
	TC	8.89	9.73	11.1	12.0	9.35	10.1	11.4	12.2	9.73	10.3	11.6	12.4
	kW	1.27	1.29	1.31	1.33	1.29	1.30	1.32	1.34	1.30	1.31	1.33	1.35
	CMP	1.18	1.19	1.22	1.23	1.19	1.20	1.22	1.24	1.19	1.20	1.23	1.24
	LDB	45.6	48.7	52.6	57.7	48.4	50.6	54.7	59.8	49.5	51.6	55.9	60.9
	LWB	41.6	46.8	51.2	56.9	43.0	48.3	53.1	58.8	43.5	49.1	54.1	59.7
115	TCG	8.70	9.09	10.4	11.7	9.06	9.47	10.9	11.9	9.23	9.68	11.1	12.0
	SHG	8.70	7.82	6.83	5.69	9.06	8.44	7.29	5.90	9.23	8.80	7.56	6.03
	TC	8.62	9.01	10.4	11.6	8.96	9.38	10.8	11.8	9.13	9.58	11.0	11.9
	kW	1.41	1.42	1.45	1.48	1.42	1.43	1.46	1.48	1.43	1.44	1.47	1.49
	CMP	1.31	1.32	1.35	1.38	1.32	1.33	1.36	1.38	1.33	1.34	1.37	1.39
	LDB	46.7	50.1	53.9	58.3	49.7	51.8	55.6	60.4	51.4	52.7	56.6	61.4
	LWB	42.1	48.1	52.5	57.5	43.6	49.4	54.0	59.3	44.5	50.2	54.8	60.3
125	TCG	8.18	8.32	9.73	11.2	8.50	8.69	10.1	11.4	8.64	8.88	10.3	11.6
	SHG	8.18	7.48	6.52	5.50	8.50	8.08	6.98	5.73	8.64	8.43	7.25	5.87
	TC	8.09	8.24	9.65	11.1	8.41	8.60	10.0	11.3	8.54	8.78	10.2	11.5
	kW	1.56	1.57	1.60	1.63	1.57	1.58	1.61	1.64	1.58	1.59	1.62	1.65
	CMP	1.46	1.47	1.50	1.54	1.47	1.48	1.51	1.54	1.48	1.48	1.52	1.55
	LDB	48.7	51.4	55.1	59.0	51.5	53.0	56.7	60.9	53.2	53.9	57.6	61.9
	LWB	43.2	49.4	53.7	58.2	44.6	50.6	55.0	59.9	45.4	51.3	55.7	60.8

Rating condition.

Not recommended for long-term operation.

LEGEND

BF – Bypass Factor
CMP – Compressor
Edb – Entering Dry Bulb
Ewb – Entering Wet Bulb
kW – Total Power
LDB – Leaving Dry Bulb
LWB – Leaving Wet Bulb
SHG – Gross Sensible Capacity (1000 Btuh)
TC – Total Net Cooling Capacity (1000 Btuh)
TCG – Gross Cooling Capacity (1000 Btuh)

*Click here to view Systems Index Table.

NOTES:
1. Direct interpolation is permissible. Do not extrapolate.
2. The SHG is based on 80 F edb temperature of air entering indoor coil.
   Below 80 F edb, subtract (corr factor x cfm) from SHG.
   Above 80 F edb, add (corr factor x cfm) to SHG.
   Correction Factor = 1.10 x (1 - BF) x (edb - 80).

COOLING CAPACITIES (cont)

SYSTEM 17C* — HIGH WALL SYSTEM (538DNX018 WITH 619ENX018)

TEMP (F) AIR ENTERING OUTDOOR UNIT (Edb)		AIR ENTERING INDOOR UNIT – CFM/BF											
		376/0.14				404/0.14				455/0.16			
		Air Entering Indoor Unit – Ewb (F)											
		57	62	67	72	57	62	67	72	57	62	67	72
55	TCG	16.7	18.0	19.2	20.2	17.0	18.4	19.5	20.2	17.6	18.9	19.8	20.3
	SHG	15.8	13.9	11.8	9.73	16.4	14.3	12.1	9.81	17.3	15.0	12.5	9.94
	TC	16.5	17.9	19.1	20.0	16.9	18.2	19.3	20.1	17.4	18.7	19.7	20.2
	kW	1.21	1.23	1.25	1.27	1.22	1.24	1.26	1.27	1.24	1.26	1.27	1.28
	CMP	1.05	1.07	1.09	1.11	1.05	1.07	1.09	1.11	1.07	1.09	1.10	1.11
	LDB	40.8	45.6	50.8	56.0	42.3	47.1	52.3	57.5	44.7	49.3	54.6	59.8
	LWB	37.9	43.3	49.2	55.5	39.0	44.5	50.4	56.8	40.7	46.3	52.3	58.7
65	TCG	15.9	17.5	18.9	20.1	16.3	17.8	19.2	20.3	17.0	18.3	19.7	20.6
	SHG	15.4	13.7	11.7	9.66	15.9	14.1	12.0	9.80	16.9	14.9	12.5	10.0
	TC	15.8	17.4	18.8	19.9	16.1	17.7	19.1	20.1	16.8	18.2	19.6	20.4
	kW	1.31	1.34	1.37	1.39	1.33	1.35	1.38	1.40	1.34	1.37	1.40	1.41
	CMP	1.15	1.18	1.21	1.23	1.16	1.19	1.21	1.24	1.17	1.20	1.23	1.24
	LDB	41.9	46.1	51.0	56.2	43.3	47.5	52.4	57.6	45.5	49.6	54.4	59.6
	LWB	38.9	44.0	49.5	55.6	39.9	45.1	50.7	56.8	41.4	46.8	52.4	58.5
75	TCG	15.2	16.8	18.4	19.7	15.5	17.1	18.7	20.0	16.2	17.6	19.2	20.4
	SHG	14.9	13.3	11.5	9.50	15.4	13.8	11.8	9.67	16.2	14.6	12.4	9.97
	TC	15.0	16.6	18.2	19.6	15.4	16.9	18.6	19.8	16.0	17.5	19.0	20.2
	kW	1.41	1.45	1.49	1.52	1.42	1.46	1.50	1.53	1.45	1.48	1.52	1.55
	CMP	1.25	1.29	1.33	1.36	1.26	1.30	1.33	1.36	1.28	1.31	1.35	1.37
	LDB	43.1	47.0	51.7	56.6	44.5	48.2	52.9	57.8	46.9	50.1	54.8	59.8
	LWB	39.9	44.9	50.2	55.9	40.9	45.9	51.2	57.0	42.3	47.5	52.8	58.7
85	TCG	14.4	15.9	17.7	19.1	14.8	16.2	18.0	19.4	15.5	16.7	18.5	19.9
	SHG	14.4	12.9	11.2	9.23	14.8	13.3	11.5	9.43	15.5	14.2	12.1	9.76
	TC	14.3	15.7	17.5	19.0	14.6	16.0	17.8	19.3	15.3	16.5	18.3	19.7
	kW	1.50	1.55	1.61	1.64	1.52	1.57	1.62	1.66	1.55	1.59	1.64	1.67
	CMP	1.34	1.39	1.44	1.48	1.35	1.40	1.45	1.49	1.38	1.42	1.47	1.50
	LDB	44.5	48.2	52.4	57.3	45.9	49.3	53.6	58.4	48.4	51.1	55.4	60.2
	LWB	40.9	46.0	50.9	56.5	41.8	46.9	51.9	57.5	43.0	48.4	53.5	59.1
95	TCG	13.7	15.0	16.7	18.4	14.1	15.2	17.0	18.7	14.7	15.7	17.5	19.1
	SHG	13.7	12.4	10.7	8.91	14.1	12.9	11.1	9.11	14.7	13.7	11.7	9.47
	TC	13.6	14.8	16.5	18.2	13.9	15.1	16.8	18.5	14.6	15.5	17.3	18.9
	kW	1.60	1.65	1.71	1.77	1.62	1.66	1.73	1.78	1.65	1.69	1.75	1.80
	CMP	1.43	1.49	1.55	1.60	1.45	1.50	1.56	1.61	1.48	1.51	1.58	1.63
	LDB	46.1	49.3	53.5	58.1	47.6	50.3	54.6	59.2	49.9	52.0	56.2	60.8
	LWB	41.8	47.0	52.0	57.2	42.6	47.9	52.9	58.2	43.7	49.3	54.3	59.7
105	TCG	13.0	14.0	15.7	17.5	13.4	14.3	15.9	17.8	14.0	14.7	16.4	18.2
	SHG	13.0	12.0	10.3	8.55	13.4	12.4	10.6	8.76	14.0	13.2	11.2	9.14
	TC	12.9	13.9	15.5	17.4	13.2	14.1	15.8	17.6	13.8	14.5	16.2	18.0
	kW	1.69	1.74	1.81	1.88	1.71	1.75	1.83	1.90	1.75	1.78	1.85	1.92
	CMP	1.53	1.58	1.65	1.72	1.55	1.59	1.66	1.73	1.58	1.61	1.68	1.75
	LDB	47.8	50.4	54.6	59.0	49.2	51.4	55.6	60.0	51.4	53.0	57.2	61.5
	LWB	42.7	48.1	53.0	58.1	43.4	48.9	53.9	59.0	44.5	50.2	55.2	60.3
115	TCG	12.3	13.1	14.6	16.3	12.6	13.3	14.9	16.6	13.2	13.7	15.2	17.0
	SHG	12.3	11.5	9.83	8.10	12.6	12.0	10.2	8.32	13.2	12.7	10.8	8.71
	TC	12.2	12.9	14.5	16.2	12.5	13.2	14.7	16.5	13.1	13.5	15.1	16.9
	kW	1.78	1.82	1.91	1.99	1.81	1.84	1.92	2.01	1.84	1.87	1.95	2.03
	CMP	1.62	1.66	1.75	1.83	1.64	1.67	1.76	1.84	1.67	1.69	1.78	1.86
	LDB	49.6	51.6	55.8	60.1	50.9	52.5	56.7	61.0	53.1	54.1	58.1	62.4
	LWB	43.6	49.2	54.1	59.1	44.3	50.0	54.9	59.9	45.3	51.2	56.1	61.2
125	TCG	11.5	12.1	13.5	15.2	11.9	12.3	13.8	15.4	12.4	12.6	14.1	15.8
	SHG	11.5	11.0	9.38	7.65	11.9	11.5	9.71	7.87	12.4	12.2	10.3	8.25
	TC	11.4	11.9	13.4	15.0	11.7	12.1	13.6	15.3	12.2	12.5	13.9	15.6
	kW	1.87	1.90	2.00	2.09	1.90	1.92	2.01	2.11	1.93	1.95	2.04	2.13
	CMP	1.71	1.74	1.83	1.93	1.73	1.75	1.84	1.94	1.76	1.78	1.86	1.96
	LDB	51.5	52.8	56.9	61.2	52.7	53.7	57.8	62.0	54.7	55.2	59.1	63.3
	LWB	44.5	50.3	55.2	60.2	45.1	51.0	55.9	60.9	46.1	52.1	57.0	62.1

Rating condition.

Not recommended for long-term operation.

LEGEND

BF – Bypass Factor
CMP – Compressor
Edb – Entering Dry Bulb
Ewb – Entering Wet Bulb
kW – Total Power
LDB – Leaving Dry Bulb
LWB – Leaving Wet Bulb
SHG – Gross Sensible Capacity (1000 Btuh)
TC – Total Net Cooling Capacity (1000 Btuh)
TCG – Gross Cooling Capacity (1000 Btuh)

*Click here to view Systems Index Table.

NOTES:
1. Direct interpolation is permissible. Do not extrapolate.
2. The SHG is based on 80 F edb temperature of air entering indoor coil.
   Below 80 F edb, subtract (corr factor x cfm) from SHG.
   Above 80 F edb, add (corr factor x cfm) to SHG.
   Correction Factor = 1.10 x (1 - BF) x (edb - 80).

COOLING CAPACITIES (cont)

SYSTEM 18C* — HIGH WALL SYSTEM (538DNX024 WITH 619ENX024)

TEMP (F) AIR ENTERING OUTDOOR UNIT (Edb)		AIR ENTERING INDOOR UNIT – CFM/BF											
		446/0.04				480/0.05				525/0.05			
		Air Entering Indoor Unit – Ewb (F)											
		57	62	67	72	57	62	67	72	57	62	67	72
55	TCG	22.6	24.5	26.2	27.7	23.1	24.9	26.5	27.7	23.8	25.5	26.9	27.8
	SHG	21.2	18.7	16.0	13.2	22.1	19.4	16.4	13.3	23.1	20.2	16.8	13.5
	TC	22.4	24.3	26.0	27.5	22.9	24.7	26.3	27.5	23.6	25.3	26.7	27.6
	kW	1.63	1.66	1.70	1.73	1.65	1.68	1.71	1.73	1.67	1.69	1.72	1.74
	CMP	1.45	1.49	1.52	1.55	1.47	1.50	1.53	1.55	1.48	1.51	1.54	1.56
	LDB	35.8	41.0	46.8	52.6	37.3	42.6	48.4	54.4	39.1	44.4	50.4	56.4
	LWB	34.7	40.1	46.1	52.4	36.0	41.5	47.5	54.0	37.5	43.1	49.3	55.8
65	TCG	21.5	23.7	25.7	27.6	22.1	24.2	26.2	27.9	22.8	24.7	26.7	28.2
	SHG	20.6	18.4	15.8	13.2	21.5	19.0	16.3	13.4	22.5	19.9	16.9	13.6
	TC	21.3	23.5	25.6	27.4	21.9	24.0	26.0	27.7	22.6	24.5	26.5	28.0
	kW	1.75	1.80	1.84	1.89	1.77	1.81	1.86	1.90	1.79	1.83	1.88	1.91
	CMP	1.58	1.62	1.67	1.71	1.59	1.63	1.68	1.72	1.60	1.64	1.69	1.73
	LDB	37.1	41.8	47.1	52.8	38.5	43.2	48.6	54.3	40.2	45.0	50.3	56.1
	LWB	36.0	41.0	46.5	52.5	37.2	42.3	47.8	53.9	38.4	43.8	49.4	55.6
75	TCG	20.5	22.6	24.9	26.9	21.0	23.1	25.4	27.4	21.7	23.7	25.9	27.8
	SHG	20.0	17.8	15.5	12.9	20.8	18.5	15.9	13.1	21.7	19.4	16.6	13.5
	TC	20.3	22.4	24.7	26.8	20.8	22.9	25.2	27.2	21.5	23.5	25.7	27.6
	kW	1.86	1.93	1.98	2.04	1.88	1.94	2.00	2.05	1.91	1.96	2.02	2.07
	CMP	1.69	1.75	1.81	1.86	1.71	1.76	1.82	1.88	1.73	1.78	1.84	1.89
	LDB	38.4	42.9	47.9	53.3	39.8	44.2	49.3	54.7	41.6	45.7	50.8	56.3
	LWB	37.2	42.2	47.3	53.0	38.3	43.3	48.6	54.3	39.5	44.7	50.0	55.8
85	TCG	19.4	21.4	23.8	26.0	20.0	21.8	24.2	26.5	20.8	22.4	24.8	27.0
	SHG	19.3	17.2	15.0	12.5	20.0	17.9	15.5	12.8	20.8	18.8	16.1	13.2
	TC	19.3	21.2	23.6	25.8	19.8	21.6	24.0	26.3	20.5	22.2	24.6	26.7
	kW	1.98	2.05	2.12	2.19	2.00	2.07	2.14	2.21	2.03	2.09	2.17	2.23
	CMP	1.80	1.87	1.95	2.01	1.82	1.89	1.96	2.03	1.85	1.91	1.98	2.04
	LDB	39.9	44.2	49.0	54.2	41.3	45.4	50.2	55.4	43.3	46.8	51.7	56.9
	LWB	38.4	43.4	48.4	53.8	39.3	44.6	49.6	55.0	40.4	45.8	50.9	56.4
95	TCG	18.5	20.1	22.5	24.8	19.1	20.6	22.9	25.3	19.8	21.1	23.4	25.8
	SHG	18.5	16.6	14.4	12.0	19.1	17.3	14.9	12.3	19.8	18.2	15.5	12.7
	TC	18.3	19.9	22.3	24.7	18.9	20.4	22.7	25.1	19.6	20.9	23.2	25.6
	kW	2.09	2.16	2.25	2.33	2.12	2.18	2.27	2.36	2.16	2.21	2.30	2.38
	CMP	1.91	1.99	2.08	2.16	1.94	2.00	2.10	2.18	1.97	2.03	2.12	2.19
	LDB	41.6	45.5	50.2	55.2	43.2	46.7	51.4	56.4	45.1	48.0	52.7	57.7
	LWB	39.5	44.7	49.6	54.8	40.3	45.8	50.7	55.9	41.3	46.9	52.0	57.2
105	TCG	17.5	18.9	21.1	23.6	18.1	19.3	21.5	24.0	18.8	19.7	22.0	24.5
	SHG	17.5	16.0	13.7	11.5	18.1	16.7	14.3	11.8	18.8	17.5	14.9	12.2
	TC	17.3	18.7	20.9	23.4	17.9	19.1	21.3	23.8	18.6	19.5	21.7	24.2
	kW	2.21	2.27	2.38	2.48	2.24	2.30	2.40	2.50	2.28	2.32	2.43	2.53
	CMP	2.03	2.10	2.20	2.30	2.06	2.12	2.22	2.32	2.09	2.14	2.24	2.34
	LDB	43.6	46.8	51.5	56.3	45.1	47.9	52.6	57.4	46.9	49.1	53.8	58.6
	LWB	40.5	45.9	50.9	55.9	41.3	46.9	51.9	56.9	42.2	48.0	53.0	58.1
115	TCG	16.6	17.6	19.7	22.1	17.1	18.0	20.1	22.4	17.8	18.4	20.5	22.9
	SHG	16.6	15.4	13.1	10.9	17.1	16.0	13.6	11.2	17.8	16.9	14.3	11.6
	TC	16.4	17.4	19.5	21.9	16.9	17.8	19.9	22.2	17.5	18.2	20.3	22.7
	kW	2.33	2.38	2.50	2.61	2.36	2.41	2.52	2.63	2.40	2.43	2.55	2.66
	CMP	2.15	2.21	2.32	2.43	2.18	2.23	2.34	2.45	2.21	2.25	2.36	2.48
	LDB	45.6	48.1	52.8	57.5	47.0	49.1	53.8	58.5	48.7	50.3	54.9	59.7
	LWB	41.6	47.2	52.1	57.1	42.3	48.1	53.1	58.1	43.1	49.1	54.1	59.1
125	TCG	15.6	16.3	18.3	20.5	16.1	16.6	18.6	20.9	16.7	17.1	19.0	21.3
	SHG	15.6	14.7	12.5	10.3	16.1	15.4	13.0	10.6	16.7	16.2	13.7	11.0
	TC	15.4	16.1	18.1	20.3	15.9	16.4	18.4	20.7	16.5	16.8	18.8	21.1
	kW	2.45	2.49	2.61	2.74	2.48	2.51	2.63	2.76	2.52	2.54	2.66	2.79
	CMP	2.27	2.32	2.43	2.56	2.30	2.34	2.45	2.58	2.34	2.36	2.48	2.60
	LDB	47.7	49.4	54.0	58.8	49.0	50.4	54.9	59.7	50.6	51.5	56.0	60.7
	LWB	42.6	48.5	53.4	58.3	43.3	49.3	54.2	59.2	44.1	50.2	55.2	60.2

Rating condition.

Not recommended for long-term operation.

LEGEND

BF – Bypass Factor
CMP – Compressor
Edb – Entering Dry Bulb
Ewb – Entering Wet Bulb
kW – Total Power
LDB – Leaving Dry Bulb
LWB – Leaving Wet Bulb
SHG – Gross Sensible Capacity (1000 Btuh)
TC – Total Net Cooling Capacity (1000 Btuh)
TCG – Gross Cooling Capacity (1000 Btuh)

*Click here to view Systems Index Table.

NOTES:
1. Direct interpolation is permissible. Do not extrapolate.
2. The SHG is based on 80 F edb temperature of air entering indoor coil.
   Below 80 F edb, subtract (corr factor x cfm) from SHG.
   Above 80 F edb, add (corr factor x cfm) to SHG.
   Correction Factor = 1.10 x (1 - BF) x (edb - 80).

COOLING CAPACITIES (cont)

SYSTEM 19C* — CEILING-SUSPENDED SYSTEM (538BNX018 WITH 619CNX024)

TEMP (F) AIR ENTERING OUTDOOR UNIT (Edb)		AIR ENTERING INDOOR UNIT – CFM/BF											
		320/0.01				400/0.02				480/0.02			
		Air Entering Indoor Unit – Ewb (F)											
		57	62	67	72	57	62	67	72	57	62	67	72
55	TCG	36.5	40.6	44.6	47.2	38.9	42.7	46.4	49.2	41.3	44.9	48.2	51.1
	SHG	33.6	30.1	26.6	22.2	37.4	33.3	28.6	23.4	41.2	36.5	30.7	24.7
	TC	35.9	40.1	44.1	46.7	38.2	42.1	45.7	48.5	40.5	44.1	47.4	50.3
	kW	2.67	2.74	2.79	2.82	2.75	2.81	2.86	2.90	2.83	2.88	2.93	2.98
	CMP	2.17	2.25	2.29	2.33	2.22	2.28	2.32	2.36	2.26	2.31	2.35	2.40
	LDB	33.1	38.1	43.4	49.8	36.7	41.5	47.0	53.2	40.3	44.9	50.7	56.5
	LWB	32.9	37.7	43.0	49.5	35.8	40.9	46.4	52.6	38.7	44.0	49.7	55.8
65	TCG	30.3	34.0	37.5	40.3	32.5	35.8	39.1	42.0	34.7	37.6	40.8	43.7
	SHG	28.8	25.5	22.5	18.9	31.7	28.3	24.4	20.1	34.7	31.1	26.3	21.3
	TC	29.8	33.5	37.0	39.9	31.9	35.2	38.5	41.4	34.0	36.9	40.1	43.0
	kW	2.47	2.55	2.61	2.66	2.55	2.62	2.68	2.73	2.63	2.69	2.74	2.80
	CMP	2.04	2.12	2.18	2.23	2.09	2.15	2.21	2.27	2.13	2.19	2.24	2.30
	LDB	34.2	39.5	44.6	50.5	38.0	42.7	47.9	53.7	41.9	45.8	51.3	56.9
	LWB	34.4	39.1	44.2	50.1	37.0	42.0	47.3	53.1	39.6	45.0	50.4	56.2
75	TCG	24.1	27.3	30.4	33.5	26.2	28.8	31.9	34.9	28.2	30.3	33.3	36.3
	SHG	23.9	20.8	18.3	15.7	26.1	23.2	20.1	16.7	28.2	25.7	21.9	17.8
	TC	23.7	26.9	30.0	33.1	25.7	28.3	31.4	34.4	27.6	29.7	32.7	35.7
	kW	2.27	2.35	2.44	2.50	2.35	2.42	2.50	2.56	2.44	2.49	2.56	2.63
	CMP	1.91	1.99	2.07	2.13	1.96	2.03	2.10	2.17	2.01	2.07	2.13	2.20
	LDB	35.3	41.0	45.8	51.2	39.4	43.9	48.8	54.2	43.5	46.8	51.8	57.2
	LWB	35.9	40.4	45.4	50.7	38.2	43.2	48.3	53.7	40.5	46.0	51.1	56.6
85	TCG	19.0	21.4	23.8	26.4	20.6	22.5	24.9	27.6	22.2	23.6	26.1	28.7
	SHG	19.0	16.5	14.5	12.4	20.6	18.5	16.0	13.3	22.2	20.5	17.5	14.2
	TC	18.6	21.1	23.4	26.1	20.2	22.1	24.5	27.1	21.7	23.1	25.6	28.2
	kW	1.99	2.07	2.15	2.23	2.07	2.13	2.21	2.28	2.15	2.19	2.27	2.33
	CMP	1.69	1.77	1.85	1.93	1.75	1.81	1.88	1.95	1.80	1.84	1.92	1.98
	LDB	37.1	42.4	47.3	52.4	41.2	45.1	50.1	55.2	45.2	47.8	52.8	58.0
	LWB	37.1	41.8	46.8	51.9	39.2	44.4	49.4	54.6	41.3	47.0	52.1	57.4
95	TCG	14.3	15.9	17.7	19.7	15.5	16.7	18.6	20.6	16.7	17.5	19.4	21.5
	SHG	14.3	12.6	11.0	9.29	15.5	14.1	12.1	10.0	16.7	15.7	13.3	10.8
	TC	14.0	15.6	17.5	19.4	15.2	16.4	18.2	20.3	16.3	17.1	19.0	21.1
	kW	1.67	1.73	1.80	1.87	1.74	1.78	1.85	1.92	1.80	1.83	1.90	1.97
	CMP	1.43	1.50	1.56	1.63	1.48	1.53	1.59	1.66	1.53	1.56	1.62	1.69
	LDB	39.1	43.8	48.7	53.8	43.0	46.3	51.3	56.3	46.8	48.9	53.8	58.9
	LWB	38.2	43.3	48.1	53.2	40.2	45.7	50.6	55.8	42.2	48.0	53.1	58.3
105	TCG	9.95	10.9	12.2	13.6	10.8	11.5	12.8	14.2	11.6	12.0	13.3	14.8
	SHG	9.95	8.86	7.68	6.47	10.8	9.98	8.51	7.01	11.6	11.1	9.35	7.54
	TC	9.75	10.7	12.0	13.4	10.5	11.2	12.5	14.0	11.3	11.7	13.0	14.5
	kW	1.29	1.34	1.39	1.45	1.34	1.37	1.43	1.49	1.39	1.41	1.47	1.53
	CMP	1.12	1.16	1.22	1.28	1.16	1.19	1.24	1.30	1.19	1.21	1.27	1.32
	LDB	41.3	45.2	50.1	55.1	44.9	47.6	52.5	57.5	48.6	50.0	54.9	59.9
	LWB	39.3	44.6	49.5	54.6	41.2	46.9	51.8	56.9	43.1	49.1	54.2	59.2
115	TCG	5.98	6.47	7.28	8.12	6.47	6.79	7.58	8.44	6.97	7.11	7.88	8.76
	SHG	5.98	5.41	4.66	3.90	6.47	6.10	5.18	4.23	6.97	6.78	5.71	4.56
	TC	5.85	6.35	7.16	7.99	6.32	6.63	7.43	8.28	6.78	6.92	7.70	8.58
	kW	0.860	0.886	0.925	0.966	0.894	0.911	0.950	0.991	0.929	0.936	0.974	1.02
	CMP	0.750	0.776	0.815	0.856	0.775	0.792	0.831	0.872	0.801	0.808	0.846	0.888
	LDB	43.4	46.5	51.4	56.4	46.9	48.9	53.7	58.7	50.4	51.2	55.9	60.9
	LWB	40.5	46.0	50.8	55.9	42.2	48.1	53.0	58.1	44.0	50.1	55.2	60.2
125	TCG	2.37	2.53	2.88	3.22	2.58	2.66	2.99	3.34	2.78	2.80	3.10	3.46
	SHG	2.37	2.21	1.89	1.57	2.58	2.49	2.11	1.71	2.78	2.77	2.33	1.85
	TC	2.32	2.47	2.83	3.17	2.51	2.60	2.93	3.28	2.70	2.72	3.03	3.38
	kW	0.378	0.386	0.405	0.424	0.393	0.397	0.415	0.434	0.408	0.408	0.426	0.445
	CMP	0.332	0.340	0.359	0.378	0.343	0.347	0.365	0.384	0.354	0.355	0.372	0.391
	LDB	46.0	48.0	52.8	57.7	49.1	50.2	54.9	59.8	52.3	52.4	56.9	61.9
	LWB	41.8	47.6	52.2	57.2	43.4	49.3	54.2	59.2	44.9	51.1	56.2	61.2

Rating condition.

Not recommended for long-term operation.

LEGEND

BF – Bypass Factor
CMP – Compressor
Edb – Entering Dry Bulb
Ewb – Entering Wet Bulb
kW – Total Power
LDB – Leaving Dry Bulb
LWB – Leaving Wet Bulb
SHG – Gross Sensible Capacity (1000 Btuh)
TC – Total Net Cooling Capacity (1000 Btuh)
TCG – Gross Cooling Capacity (1000 Btuh)

*Click here to view Systems Index Table.

NOTES:
1. Direct interpolation is permissible. Do not extrapolate.
2. The SHG is based on 80 F edb temperature of air entering indoor coil.
   Below 80 F edb, subtract (corr factor x cfm) from SHG.
   Above 80 F edb, add (corr factor x cfm) to SHG.
   Correction Factor = 1.10 x (1 - BF) x (edb - 80).

COOLING CAPACITIES (cont)

SYSTEM 20C* — CEILING-SUSPENDED SYSTEM (538BNX024 WITH 619CNX024)

TEMP (F) AIR ENTERNG OUTDOOR UNIT (Edb)		AIR ENTERING INDOOR UNIT – CFM/BF											
		400/0.02				480/0.02				550/0.03			
		Air Entering Indoor Unit – Ewb (F)											
		57	62	67	72	57	62	67	72	57	62	67	72
55	TCG	23.7	25.4	26.4	27.2	24.9	26.3	27.1	27.6	25.5	26.6	27.6	28.1
	SHG	21.8	19.1	16.0	13.1	23.8	20.5	16.8	13.4	25.0	21.2	17.4	13.7
	TC	23.3	25.0	26.1	26.9	24.5	25.9	26.7	27.2	25.0	26.1	27.1	27.6
	kW	1.70	1.73	1.75	1.77	1.74	1.77	1.79	1.80	1.77	1.80	1.82	1.83
	CMP	1.43	1.46	1.49	1.51	1.45	1.49	1.50	1.52	1.47	1.49	1.52	1.53
	LDB	33.6	39.3	46.0	52.4	37.8	43.8	50.5	56.6	41.3	47.3	53.3	59.1
	LWB	32.6	38.4	45.1	52.1	36.3	42.3	49.0	55.9	38.9	45.1	51.4	58.0
65	TCG	22.5	24.7	26.4	27.5	23.9	25.7	27.0	28.2	24.8	26.4	27.7	28.7
	SHG	21.0	18.8	16.0	13.1	23.2	20.2	16.8	13.6	24.7	21.5	17.7	14.0
	TC	22.1	24.4	26.0	27.1	23.5	25.2	26.6	27.7	24.3	25.9	27.2	28.2
	kW	1.82	1.87	1.90	1.93	1.87	1.90	1.94	1.97	1.90	1.94	1.98	2.00
	CMP	1.56	1.60	1.64	1.67	1.58	1.62	1.65	1.69	1.60	1.64	1.67	1.70
	LDB	34.4	39.3	45.4	51.8	38.1	43.6	49.8	55.8	41.1	46.3	52.4	58.3
	LWB	33.6	38.6	44.7	51.5	36.9	42.5	48.7	55.1	39.1	44.9	51.0	57.3
75	TCG	21.1	23.2	25.3	26.9	22.4	24.3	26.2	27.7	23.5	25.2	26.9	28.3
	SHG	20.0	17.9	15.5	12.8	22.1	19.5	16.5	13.3	23.5	20.9	17.4	13.8
	TC	20.7	22.9	24.9	26.5	22.0	23.9	25.7	27.2	23.0	24.7	26.4	27.8
	kW	1.92	1.98	2.04	2.08	1.97	2.03	2.08	2.13	2.03	2.07	2.12	2.17
	CMP	1.65	1.72	1.78	1.82	1.69	1.75	1.80	1.84	1.72	1.77	1.82	1.87
	LDB	35.8	40.5	46.0	52.0	39.4	44.2	50.0	55.8	42.4	46.7	52.4	58.2
	LWB	35.0	39.9	45.4	51.6	37.9	43.3	49.0	55.1	39.9	45.5	51.2	57.3
85	TCG	19.7	21.8	24.1	26.3	21.0	23.0	25.3	27.1	22.2	23.9	26.1	27.9
	SHG	19.1	17.1	14.9	12.5	21.0	18.8	16.1	13.1	22.2	20.3	17.1	13.7
	TC	19.3	21.4	23.8	26.0	20.6	22.6	24.9	26.7	21.8	23.4	25.6	27.4
	kW	2.01	2.09	2.18	2.24	2.08	2.16	2.23	2.28	2.15	2.21	2.27	2.33
	CMP	1.75	1.83	1.91	1.98	1.80	1.88	1.94	2.00	1.85	1.91	1.97	2.03
	LDB	37.2	41.8	46.7	52.2	40.7	44.9	50.1	55.8	43.8	47.0	52.3	58.0
	LWB	36.3	41.1	46.1	51.7	39.0	44.1	49.3	55.2	40.6	46.1	51.4	57.2
95	TCG	18.3	20.2	22.5	24.9	19.7	21.3	23.7	25.9	20.8	22.1	24.5	26.5
	SHG	18.1	16.1	14.1	11.9	19.7	17.8	15.3	12.6	20.8	19.3	16.4	13.1
	TC	17.9	19.9	22.1	24.5	19.3	20.9	23.3	25.5	20.4	21.7	24.0	26.0
	kW	2.11	2.19	2.29	2.38	2.19	2.26	2.36	2.43	2.25	2.31	2.40	2.47
	CMP	1.85	1.93	2.03	2.11	1.91	1.98	2.07	2.15	1.96	2.01	2.10	2.17
	LDB	38.7	43.2	48.0	53.1	42.6	46.1	51.0	56.3	45.5	48.1	53.0	58.5
	LWB	37.6	42.5	47.4	52.6	40.0	45.3	50.3	55.7	41.5	47.2	52.2	57.8
105	TCG	16.9	18.7	20.8	23.2	18.4	19.7	21.9	24.2	19.4	20.4	22.6	24.9
	SHG	16.9	15.2	13.2	11.1	18.4	16.9	14.5	11.9	19.4	18.3	15.5	12.5
	TC	16.6	18.3	20.5	22.8	18.0	19.3	21.5	23.8	19.0	19.9	22.2	24.5
	kW	2.20	2.29	2.39	2.50	2.29	2.36	2.46	2.57	2.36	2.41	2.52	2.61
	CMP	1.94	2.03	2.13	2.24	2.01	2.08	2.18	2.29	2.07	2.11	2.22	2.31
	LDB	40.6	44.6	49.4	54.4	44.4	47.3	52.2	57.2	47.2	49.2	54.0	59.2
	LWB	38.9	43.9	48.8	53.8	41.0	46.5	51.5	56.6	42.4	48.2	53.2	58.5
115	TCG	15.8	17.2	19.2	21.4	17.1	18.0	20.1	22.4	18.1	18.7	20.8	23.1
	SHG	15.8	14.4	12.4	10.4	17.1	16.0	13.6	11.2	18.1	17.3	14.6	11.8
	TC	15.4	16.8	18.8	21.0	16.7	17.6	19.7	22.0	17.6	18.2	20.3	22.6
	kW	2.30	2.38	2.49	2.61	2.40	2.45	2.56	2.69	2.47	2.50	2.62	2.74
	CMP	2.04	2.12	2.24	2.35	2.12	2.17	2.29	2.41	2.17	2.21	2.32	2.44
	LDB	42.6	46.0	50.8	55.7	46.3	48.6	53.3	58.3	49.0	50.3	55.1	60.0
	LWB	40.0	45.3	50.1	55.1	41.9	47.7	52.6	57.7	43.3	49.3	54.3	59.4
125	TCG	14.6	15.7	17.6	19.6	15.8	16.5	18.4	20.5	16.7	17.0	18.9	21.1
	SHG	14.6	13.5	11.6	9.63	15.8	15.1	12.8	10.4	16.7	16.3	13.7	11.0
	TC	14.3	15.3	17.2	19.3	15.5	16.1	18.0	20.1	16.3	16.6	18.5	20.7
	kW	2.40	2.47	2.59	2.72	2.50	2.54	2.66	2.79	2.57	2.60	2.71	2.85
	CMP	2.15	2.21	2.33	2.46	2.22	2.26	2.38	2.52	2.28	2.30	2.42	2.56
	LDB	44.7	47.4	52.1	57.0	48.2	49.7	54.5	59.4	50.8	51.5	56.1	61.0
	LWB	41.1	46.6	51.5	56.4	42.9	48.8	53.7	58.8	44.2	50.3	55.3	60.3

Rating condition.

Not recommended for long-term operation.

LEGEND

BF – Bypass Factor
CMP – Compressor
Edb – Entering Dry Bulb
Ewb – Entering Wet Bulb
kW – Total Power
LDB – Leaving Dry Bulb
LWB – Leaving Wet Bulb
SHG – Gross Sensible Capacity (1000 Btuh)
TC – Total Net Cooling Capacity (1000 Btuh)
TCG – Gross Cooling Capacity (1000 Btuh)

*Click here to view Systems Index Table.

NOTES:
1. Direct interpolation is permissible. Do not extrapolate.
2. The SHG is based on 80 F edb temperature of air entering indoor coil.
   Below 80 F edb, subtract (corr factor x cfm) from SHG.
   Above 80 F edb, add (corr factor x cfm) to SHG.
   Correction Factor = 1.10 x (1 - BF) x (edb - 80).

COOLING CAPACITIES (cont)

SYSTEM 21C* — CEILING-SUSPENDED SYSTEM (538BNX030 WITH 619CNX036)

TEMP (F) AIR ENTERING OUTDOOR UNIT (Edb)		AIR ENTERING INDOOR UNIT – CFM/BF											
		630/0.02				750/0.03				870/0.04			
		Air Entering Indoor Unit – Ewb (F)											
		57	62	67	72	57	62	67	72	57	62	67	72
55	TCG	31.0	33.8	35.8	37.0	33.0	35.0	36.4	37.8	34.5	35.3	36.2	37.7
	SHG	31.0	27.2	22.6	17.9	33.0	29.6	23.9	18.6	34.5	31.2	24.5	19.0
	TC	30.5	33.3	35.3	36.4	32.3	34.4	35.8	37.1	33.7	34.6	35.5	36.9
	kW	2.74	2.78	2.79	2.82	2.79	2.83	2.84	2.87	2.86	2.86	2.88	2.92
	CMP	2.28	2.31	2.33	2.35	2.29	2.32	2.34	2.37	2.31	2.32	2.33	2.37
	LDB	38.8	44.0	50.2	56.6	43.4	47.2	53.7	59.6	47.0	50.3	56.8	62.2
	LWB	38.0	43.2	49.3	55.9	40.4	46.1	52.3	58.5	42.3	48.5	54.8	60.7
65	TCG	29.4	31.9	34.2	36.0	31.3	33.1	35.1	36.6	32.8	33.7	35.4	36.8
	SHG	29.3	26.0	21.8	17.5	31.3	28.4	23.3	18.2	32.8	30.2	24.4	18.7
	TC	28.9	31.4	33.7	35.5	30.7	32.5	34.5	36.0	32.1	33.0	34.7	36.1
	kW	2.70	2.74	2.77	2.80	2.77	2.79	2.82	2.85	2.82	2.83	2.86	2.90
	CMP	2.28	2.32	2.35	2.38	2.30	2.33	2.36	2.39	2.33	2.33	2.37	2.40
	LDB	40.0	44.6	50.4	56.5	44.2	47.6	53.6	59.5	47.8	50.4	56.2	61.9
	LWB	38.6	43.9	49.6	55.8	40.9	46.6	52.5	58.6	42.7	48.8	54.7	60.7
75	TCG	27.7	30.0	32.6	35.1	29.6	31.2	33.8	35.4	31.1	32.0	34.6	35.9
	SHG	27.7	24.8	21.0	17.1	29.6	27.2	22.7	17.7	31.1	29.3	24.2	18.4
	TC	27.2	29.5	32.2	34.6	29.1	30.6	33.2	34.8	30.4	31.3	33.9	35.3
	kW	2.66	2.71	2.75	2.79	2.74	2.76	2.80	2.83	2.79	2.80	2.85	2.87
	CMP	2.28	2.33	2.37	2.41	2.32	2.35	2.39	2.41	2.34	2.35	2.40	2.43
	LDB	41.2	45.3	50.7	56.3	45.1	48.1	53.5	59.5	48.5	50.4	55.6	61.6
	LWB	39.2	44.6	50.0	55.7	41.3	47.2	52.6	58.7	43.1	49.1	54.6	60.6
85	TCG	26.0	28.0	30.7	33.1	27.9	29.2	31.9	33.8	29.4	30.1	32.8	34.4
	SHG	26.0	23.5	20.0	16.2	27.9	25.9	21.7	17.0	29.4	28.1	23.4	17.8
	TC	25.6	27.6	30.3	32.7	27.3	28.7	31.3	33.2	28.7	29.5	32.1	33.7
	kW	2.60	2.64	2.69	2.73	2.67	2.70	2.74	2.77	2.73	2.74	2.79	2.81
	CMP	2.26	2.30	2.35	2.39	2.30	2.33	2.38	2.40	2.33	2.34	2.39	2.41
	LDB	42.3	46.0	51.2	56.8	46.2	48.6	53.8	59.6	49.4	50.8	55.8	61.7
	LWB	39.9	45.3	50.6	56.3	41.9	47.7	53.0	58.9	43.5	49.6	54.9	60.7
95	TCG	24.4	26.1	28.7	31.3	26.1	27.2	29.8	32.1	27.5	28.1	30.6	32.9
	SHG	24.4	22.3	19.0	15.4	26.1	24.6	20.6	16.3	27.5	26.7	22.2	17.3
	TC	24.0	25.7	28.3	30.8	25.6	26.7	29.3	31.6	26.9	27.4	30.0	32.3
	kW	2.50	2.53	2.59	2.63	2.56	2.58	2.64	2.67	2.62	2.63	2.68	2.72
	CMP	2.20	2.24	2.30	2.34	2.24	2.26	2.32	2.35	2.27	2.28	2.33	2.37
	LDB	43.5	46.8	51.9	57.3	47.3	49.3	54.3	59.8	50.4	51.3	56.2	61.7
	LWB	40.5	46.1	51.3	56.8	42.5	48.4	53.6	59.2	44.0	50.1	55.4	60.9
105	TCG	22.9	24.3	26.7	29.3	24.5	25.2	27.7	30.2	25.7	26.1	28.5	30.9
	SHG	22.9	21.1	17.9	14.5	24.5	23.2	19.5	15.5	25.7	25.2	21.1	16.4
	TC	22.4	23.8	26.3	28.8	23.9	24.7	27.2	29.6	25.1	25.5	27.8	30.3
	kW	2.35	2.38	2.44	2.49	2.41	2.43	2.48	2.53	2.46	2.47	2.52	2.56
	CMP	2.10	2.13	2.19	2.23	2.14	2.15	2.21	2.25	2.17	2.17	2.23	2.27
	LDB	44.7	47.6	52.6	57.9	48.4	50.0	55.0	60.3	51.5	52.0	56.7	62.0
	LWB	41.1	46.9	52.0	57.3	43.0	49.0	54.2	59.6	44.5	50.7	55.9	61.3
115	TCG	21.4	22.5	24.8	27.2	22.8	23.3	25.6	28.1	24.0	24.1	26.3	28.8
	SHG	21.4	19.9	16.8	13.6	22.8	22.0	18.4	14.6	24.0	23.8	19.9	15.5
	TC	21.0	22.0	24.3	26.8	22.3	22.8	25.1	27.6	23.4	23.5	25.7	28.2
	kW	2.16	2.18	2.23	2.28	2.21	2.22	2.27	2.32	2.25	2.25	2.30	2.35
	CMP	1.95	1.98	2.02	2.07	1.98	1.99	2.04	2.09	2.01	2.01	2.06	2.11
	LDB	45.9	48.4	53.4	58.5	49.6	50.7	55.6	60.8	52.5	52.7	57.3	62.4
	LWB	41.7	47.6	52.7	58.0	43.6	49.7	54.9	60.1	45.0	51.2	56.5	61.7
125	TCG	19.9	20.7	22.8	25.1	21.2	21.5	23.6	26.1	22.3	22.3	24.1	26.6
	SHG	19.9	18.7	15.8	12.7	21.2	20.7	17.3	13.7	22.3	22.3	18.7	14.6
	TC	19.5	20.3	22.4	24.7	20.7	21.0	23.1	25.6	21.7	21.7	23.6	26.1
	kW	1.92	1.94	1.98	2.03	1.96	1.97	2.01	2.06	2.00	2.00	2.03	2.09
	CMP	1.76	1.77	1.81	1.86	1.78	1.79	1.83	1.88	1.80	1.80	1.84	1.89
	LDB	47.2	49.1	54.1	59.3	50.7	51.4	56.3	61.3	53.5	53.5	57.9	62.9
	LWB	42.4	48.3	53.5	58.7	44.1	50.3	55.5	60.7	45.5	51.7	57.0	62.2

Rating condition.

Not recommended for long-term operation.

LEGEND

BF – Bypass Factor
CMP – Compressor
Edb – Entering Dry Bulb
Ewb – Entering Wet Bulb
kW – Total Power
LDB – Leaving Dry Bulb
LWB – Leaving Wet Bulb
SHG – Gross Sensible Capacity (1000 Btuh)
TC – Total Net Cooling Capacity (1000 Btuh)
TCG – Gross Cooling Capacity (1000 Btuh)

*Click here to view Systems Index Table.

NOTES:
1. Direct interpolation is permissible. Do not extrapolate.
2. The SHG is based on 80 F edb temperature of air entering indoor coil.
   Below 80 F edb, subtract (corr factor x cfm) from SHG.
   Above 80 F edb, add (corr factor x cfm) to SHG.
   Correction Factor = 1.10 x (1 - BF) x (edb - 80).

COOLING CAPACITIES (cont)

SYSTEM 22C* — CEILING-SUSPENDED SYSTEM (538BNX036 SINGLE-PHASE UNIT WITH 619CNX036)

TEMP (F) AIR ENTERING OUTDOOR UNIT (Edb)		AIR ENTERING INDOOR UNIT – CFM/BF											
		630/0.02				750/0.03				870/0.04			
		Air Entering Indoor Unit – Ewb (F)											
		57	62	67	72	57	62	67	72	57	62	67	72
55	TCG	36.4	39.2	42.2	43.7	38.1	40.6	43.3	44.4	40.0	41.6	43.7	44.8
	SHG	34.7	30.4	26.0	20.9	37.8	32.8	27.5	21.6	40.0	35.0	28.6	22.1
	TC	35.8	38.7	41.6	43.1	37.5	39.9	42.7	43.8	39.2	40.8	42.9	44.0
	kW	2.27	2.29	2.34	2.36	2.31	2.34	2.39	2.41	2.37	2.39	2.42	2.44
	CMP	1.94	1.97	2.01	2.04	1.95	1.99	2.03	2.05	1.98	2.00	2.04	2.06
	LDB	36.2	41.7	47.3	53.9	40.0	45.3	51.0	57.4	43.6	48.2	54.1	60.1
	LWB	35.3	40.9	46.6	53.4	38.4	44.2	50.0	56.6	40.5	46.6	52.6	59.0
65	TCG	34.2	37.2	39.9	42.2	36.0	38.7	41.2	43.2	37.8	39.7	42.0	43.8
	SHG	33.0	29.1	24.8	20.2	36.0	31.6	26.4	21.0	37.8	33.9	27.8	21.8
	TC	33.7	36.7	39.4	41.6	35.4	38.1	40.6	42.5	37.1	39.0	41.3	43.1
	kW	2.47	2.51	2.54	2.58	2.52	2.55	2.60	2.63	2.57	2.60	2.64	2.67
	CMP	2.15	2.19	2.22	2.26	2.17	2.20	2.25	2.28	2.20	2.22	2.26	2.30
	LDB	37.0	42.1	47.8	53.9	40.6	45.5	51.3	57.3	44.4	48.2	54.0	59.8
	LWB	36.1	41.4	47.1	53.4	38.9	44.5	50.3	56.5	40.9	46.9	52.7	58.8
75	TCG	32.0	34.9	37.7	40.2	33.9	36.3	39.0	41.2	35.7	37.4	39.8	42.0
	SHG	31.2	27.6	23.6	19.3	33.8	30.1	25.3	20.2	35.7	32.4	26.7	21.0
	TC	31.4	34.4	37.2	39.7	33.3	35.7	38.4	40.6	35.0	36.7	39.1	41.3
	kW	2.68	2.74	2.79	2.83	2.75	2.79	2.84	2.88	2.81	2.84	2.88	2.93
	CMP	2.37	2.42	2.47	2.52	2.41	2.45	2.49	2.54	2.44	2.47	2.51	2.56
	LDB	37.9	42.8	48.4	54.2	41.7	46.0	51.6	57.5	45.3	48.5	54.2	59.8
	LWB	36.9	42.1	47.7	53.7	39.5	45.1	50.7	56.8	41.4	47.3	53.0	58.9
85	TCG	29.7	32.5	35.5	38.3	31.7	34.0	36.8	39.2	33.5	35.1	37.7	40.1
	SHG	29.4	26.1	22.4	18.4	31.7	28.6	24.1	19.3	33.5	31.0	25.6	20.2
	TC	29.2	32.0	35.0	37.8	31.1	33.4	36.2	38.6	32.8	34.4	37.0	39.4
	kW	2.90	2.97	3.03	3.08	2.97	3.03	3.08	3.13	3.05	3.08	3.12	3.18
	CMP	2.59	2.66	2.72	2.77	2.64	2.70	2.74	2.79	2.69	2.72	2.76	2.82
	LDB	38.9	43.6	48.9	54.6	42.9	46.5	51.9	57.7	46.2	48.8	54.3	59.9
	LWB	37.8	42.9	48.3	54.0	40.1	45.7	51.2	57.0	41.9	47.8	53.3	59.1
95	TCG	27.6	30.1	33.1	35.9	29.5	31.4	34.4	37.0	31.2	32.5	35.3	37.7
	SHG	27.6	24.5	21.0	17.3	29.5	27.0	22.8	18.3	31.2	29.3	24.4	19.2
	TC	27.1	29.6	32.6	35.4	29.0	30.9	33.8	36.5	30.5	31.9	34.6	37.0
	kW	3.14	3.21	3.29	3.36	3.22	3.28	3.35	3.41	3.30	3.34	3.39	3.45
	CMP	2.84	2.91	2.99	3.06	2.89	2.95	3.02	3.08	2.94	2.98	3.04	3.10
	LDB	40.0	44.5	49.6	55.1	44.1	47.3	52.5	58.0	47.4	49.4	54.7	60.2
	LWB	38.6	43.8	49.1	54.6	40.8	46.5	51.8	57.4	42.5	48.4	53.8	59.5
105	TCG	25.6	27.7	30.5	33.3	27.4	28.9	31.8	34.4	28.9	29.9	32.6	35.0
	SHG	25.6	23.0	19.7	16.2	27.4	25.3	21.4	17.1	28.9	27.5	23.0	18.0
	TC	25.1	27.2	30.0	32.8	26.8	28.3	31.2	33.8	28.3	29.3	32.0	34.4
	kW	3.39	3.47	3.56	3.63	3.48	3.53	3.63	3.69	3.56	3.59	3.68	3.73
	CMP	3.10	3.17	3.27	3.34	3.16	3.21	3.31	3.37	3.21	3.24	3.33	3.39
	LDB	41.5	45.5	50.6	55.9	45.5	48.2	53.2	58.6	48.6	50.2	55.2	60.7
	LWB	39.4	44.8	50.0	55.4	41.5	47.3	52.5	58.0	43.1	49.1	54.4	60.0
115	TCG	23.6	25.3	27.9	30.7	25.3	26.4	29.1	31.7	26.6	27.2	29.9	32.3
	SHG	23.6	21.5	18.3	15.1	25.3	23.6	19.9	16.0	26.6	25.7	21.5	16.8
	TC	23.2	24.9	27.5	30.3	24.8	25.9	28.5	31.2	26.0	26.6	29.3	31.7
	kW	3.66	3.73	3.83	3.95	3.75	3.80	3.90	3.99	3.83	3.86	3.96	4.03
	CMP	3.37	3.44	3.54	3.66	3.44	3.48	3.59	3.68	3.49	3.52	3.62	3.69
	LDB	43.0	46.5	51.5	56.7	46.8	49.0	54.0	59.2	49.9	51.0	55.9	61.2
	LWB	40.2	45.8	50.9	56.2	42.2	48.1	53.3	58.6	43.8	49.9	55.1	60.5
125	TCG	21.7	23.0	25.4	28.0	23.1	24.0	26.3	29.1	24.4	24.7	27.1	29.8
	SHG	21.7	20.0	16.9	13.9	23.1	22.1	18.5	14.9	24.4	23.9	20.0	15.8
	TC	21.3	22.6	24.9	27.6	22.6	23.5	25.8	28.6	23.9	24.1	26.5	29.2
	kW	3.93	3.99	4.11	4.23	4.03	4.06	4.18	4.32	4.11	4.13	4.24	4.36
	CMP	3.65	3.71	3.83	3.95	3.72	3.76	3.87	4.01	3.78	3.80	3.91	4.02
	LDB	44.6	47.5	52.5	57.6	48.3	49.9	54.9	59.9	51.2	51.9	56.6	61.7
	LWB	41.1	46.8	51.9	57.1	43.0	48.9	54.2	59.3	44.4	50.6	55.8	61.0

Rating condition.

Not recommended for long-term operation.

LEGEND

BF – Bypass Factor
CMP – Compressor
Edb – Entering Dry Bulb
Ewb – Entering Wet Bulb
kW – Total Power
LDB – Leaving Dry Bulb
LWB – Leaving Wet Bulb
SHG – Gross Sensible Capacity (1000 Btuh)
TC – Total Net Cooling Capacity (1000 Btuh)
TCG – Gross Cooling Capacity (1000 Btuh)

*Click here to view Systems Index Table.

NOTES:
1. Direct interpolation is permissible. Do not extrapolate.
2. The SHG is based on 80 F edb temperature of air entering indoor coil.
   Below 80 F edb, subtract (corr factor x cfm) from SHG.
   Above 80 F edb, add (corr factor x cfm) to SHG.
   Correction Factor = 1.10 x (1 - BF) x (edb - 80).

COOLING CAPACITIES (cont)

SYSTEM 23C* — CEILING-SUSPENDED SYSTEM (538BPX, BEX036 3-PHASE UNIT WITH 619CNX036)

TEMP (F) AIR ENTERING OUTDOOR UNIT (Edb)		AIR ENTERING INDOOR UNIT – CFM/BF											
		630/0.03				750/0.04				870/0.05			
		Air Entering Indoor Unit – Ewb (F)											
		57	62	67	72	57	62	67	72	57	62	67	72
55	TCG	40.4	43.0	43.2	43.8	41.9	43.7	44.7	41.3	43.2	43.1	43.9	39.3
	SHG	37.7	32.6	26.4	21.1	40.9	34.2	27.8	20.2	43.2	34.8	27.8	19.4
	TC	39.9	42.4	42.7	43.3	41.2	43.0	44.0	40.7	42.4	42.3	43.1	38.5
	kW	2.05	1.97	1.93	1.96	2.01	2.00	2.03	1.89	2.04	1.99	2.01	1.85
	CMP	1.70	1.63	1.59	1.61	1.64	1.63	1.66	1.52	1.65	1.60	1.62	1.45
	LDB	34.4	40.8	48.6	55.1	38.6	45.7	52.3	60.3	42.4	50.2	56.4	64.0
	LWB	33.6	39.6	47.3	54.6	37.2	43.6	50.4	59.0	39.9	46.9	53.4	61.7
65	TCG	37.3	40.0	41.3	42.5	38.9	41.0	42.5	41.2	40.4	41.0	42.3	39.9
	SHG	35.2	30.7	25.4	20.4	38.2	32.6	26.7	20.1	40.4	33.7	27.2	19.8
	TC	36.7	39.5	40.7	41.9	38.2	40.3	41.9	40.5	39.6	40.2	41.5	39.2
	kW	2.34	2.33	2.34	2.37	2.35	2.37	2.41	2.35	2.40	2.38	2.42	2.33
	CMP	1.98	1.97	1.97	2.01	1.96	1.98	2.02	1.96	1.99	1.97	2.01	1.92
	LDB	35.8	41.5	48.4	54.7	39.7	45.8	52.1	59.3	43.4	49.7	55.7	62.6
	LWB	34.8	40.4	47.3	54.2	38.1	44.1	50.5	58.2	40.4	47.0	53.3	60.8
75	TCG	34.1	37.0	39.3	41.2	35.9	38.3	40.4	41.0	37.6	38.9	40.7	40.6
	SHG	32.7	28.8	24.3	19.8	35.5	31.0	25.7	20.0	37.6	32.6	26.6	20.1
	TC	33.5	36.5	38.8	40.6	35.2	37.7	39.8	40.4	36.9	38.1	40.0	39.8
	kW	2.63	2.69	2.74	2.79	2.68	2.74	2.79	2.81	2.76	2.77	2.83	2.82
	CMP	2.25	2.30	2.36	2.41	2.28	2.33	2.39	2.40	2.33	2.34	2.39	2.39
	LDB	37.1	42.2	48.3	54.3	40.9	46.0	51.9	58.3	44.4	49.2	55.0	61.3
	LWB	36.0	41.3	47.4	53.8	38.9	44.6	50.6	57.3	40.9	47.1	53.1	59.8
85	TCG	30.9	34.1	37.4	39.8	32.8	35.6	38.3	40.9	34.8	36.8	39.2	41.2
	SHG	30.1	26.9	23.2	19.1	32.8	29.3	24.6	19.9	34.8	31.6	26.0	20.5
	TC	30.4	33.6	36.9	39.3	32.2	35.0	37.7	40.3	34.1	36.1	38.5	40.5
	kW	2.92	3.05	3.15	3.21	3.02	3.11	3.18	3.27	3.12	3.17	3.23	3.30
	CMP	2.52	2.64	2.74	2.81	2.59	2.68	2.75	2.85	2.67	2.71	2.78	2.85
	LDB	38.5	43.0	48.1	54.0	42.0	46.2	51.7	57.2	45.3	48.6	54.3	59.9
	LWB	37.2	42.2	47.4	53.5	39.7	45.1	50.7	56.5	41.4	47.2	52.9	58.9
95	TCG	27.8	30.7	34.0	37.1	29.8	32.2	35.5	38.4	31.6	33.4	36.7	39.3
	SHG	27.6	24.7	21.4	17.8	29.8	27.2	23.1	18.8	31.6	29.4	24.8	19.7
	TC	27.4	30.2	33.6	36.6	29.3	31.6	34.9	37.8	31.0	32.7	36.0	38.6
	kW	3.23	3.36	3.52	3.63	3.35	3.46	3.60	3.71	3.46	3.55	3.67	3.77
	CMP	2.81	2.94	3.10	3.21	2.90	3.02	3.15	3.26	2.99	3.07	3.20	3.29
	LDB	39.9	44.2	49.0	54.4	43.7	47.0	52.0	57.4	46.9	49.2	54.2	59.7
	LWB	38.4	43.4	48.4	53.9	40.6	46.0	51.1	56.7	42.2	48.0	53.2	58.8
105	TCG	25.0	27.4	30.5	33.8	26.9	28.8	31.9	35.1	28.6	29.8	33.0	36.0
	SHG	25.0	22.6	19.5	16.3	26.9	24.9	21.2	17.3	28.6	27.0	22.8	18.2
	TC	24.5	27.0	30.1	33.4	26.4	28.2	31.4	34.6	27.9	29.2	32.4	35.4
	kW	3.56	3.70	3.88	4.07	3.70	3.81	3.99	4.15	3.82	3.89	4.08	4.22
	CMP	3.12	3.26	3.44	3.63	3.23	3.34	3.52	3.68	3.33	3.40	3.58	3.72
	LDB	41.7	45.5	50.3	55.2	45.4	48.1	52.9	58.0	48.4	50.2	54.9	60.1
	LWB	39.5	44.6	49.6	54.7	41.5	47.0	52.1	57.3	43.0	48.9	54.0	59.3
115	TCG	22.4	24.3	27.1	30.1	24.1	25.4	28.3	31.4	25.6	26.4	29.2	32.4
	SHG	22.4	20.5	17.6	14.7	24.1	22.6	19.2	15.7	25.6	24.6	20.7	16.7
	TC	22.0	23.9	26.7	29.7	23.6	24.9	27.8	30.9	25.0	25.8	28.6	31.8
	kW	3.93	4.06	4.25	4.46	4.08	4.17	4.36	4.58	4.20	4.26	4.46	4.68
	CMP	3.47	3.60	3.79	4.00	3.59	3.68	3.88	4.09	3.69	3.74	3.94	4.16
	LDB	43.7	46.8	51.5	56.4	47.2	49.3	54.0	58.9	50.1	51.3	55.9	60.8
	LWB	40.6	45.9	50.8	55.9	42.4	48.1	53.1	58.2	43.8	49.8	54.9	60.0
125	TCG	19.9	21.2	23.8	26.5	21.4	22.3	24.8	27.6	22.7	23.0	25.5	28.4
	SHG	19.9	18.5	15.9	13.1	21.4	20.5	17.3	14.0	22.7	22.2	18.7	14.9
	TC	19.5	20.8	23.4	26.1	20.9	21.8	24.3	27.1	22.1	22.5	25.0	27.8
	kW	4.31	4.42	4.64	4.87	4.46	4.54	4.75	4.99	4.60	4.64	4.85	5.09
	CMP	3.83	3.95	4.16	4.39	3.96	4.03	4.25	4.48	4.06	4.10	4.31	4.55
	LDB	45.7	48.1	52.8	57.7	49.0	50.4	55.1	59.9	51.8	52.4	56.8	61.7
	LWB	41.6	47.2	52.0	57.1	43.3	49.2	54.2	59.2	44.7	50.8	55.8	60.9

Rating condition.

Not recommended for long-term operation.

LEGEND

BF – Bypass Factor
CMP – Compressor
Edb – Entering Dry Bulb
Ewb – Entering Wet Bulb
kW – Total Power
LDB – Leaving Dry Bulb
LWB – Leaving Wet Bulb
SHG – Gross Sensible Capacity (1000 Btuh)
TC – Total Net Cooling Capacity (1000 Btuh)
TCG – Gross Cooling Capacity (1000 Btuh)

*Click here to view Systems Index Table.

NOTES:
1. Direct interpolation is permissible. Do not extrapolate.
2. The SHG is based on 80 F edb temperature of air entering indoor coil.
   Below 80 F edb, subtract (corr factor x cfm) from SHG.
   Above 80 F edb, add (corr factor x cfm) to SHG.
   Correction Factor = 1.10 x (1 - BF) x (edb - 80).

COOLING CAPACITIES (cont)

SYSTEM 24C* — CEILING-SUSPENDED SYSTEM (538BNX, BPX, BEX048 WITH 619CNX048)

TEMP (F) AIR ENTERING OUTDOOR UNIT (Edb)		AIR ENTERING INDOOR UNIT – CFM/BF											
		820/0.03				975/0.04				1100/0.05			
		Air Entering Indoor Unit – Ewb (F)											
		57	62	67	72	57	62	67	72	57	62	67	72
55	TCG	49.1	51.7	52.8	53.7	50.2	52.8	53.4	54.5	51.3	53.2	53.9	53.8
	SHG	45.1	39.0	32.2	26.1	47.7	41.0	33.2	26.7	50.1	42.4	34.1	26.6
	TC	48.1	50.7	51.8	52.7	49.0	51.6	52.2	53.3	50.0	51.8	52.6	52.4
	kW	3.21	3.27	3.29	3.31	3.27	3.34	3.35	3.38	3.35	3.39	3.41	3.40
	CMP	2.73	2.79	2.81	2.83	2.75	2.81	2.82	2.85	2.77	2.82	2.83	2.83
	LDB	36.3	42.3	49.1	55.2	41.3	46.8	53.4	58.8	45.0	50.5	56.5	61.9
	LWB	34.4	40.5	47.6	54.6	38.2	44.2	51.1	57.7	40.8	47.0	53.5	60.1
65	TCG	47.4	50.4	53.2	55.1	49.4	52.3	53.3	55.5	50.8	53.4	54.3	54.8
	SHG	44.2	38.4	32.5	26.5	47.6	41.1	33.3	27.0	50.3	43.4	34.6	27.0
	TC	46.4	49.4	52.2	54.1	48.2	51.1	52.2	54.4	49.5	52.1	53.0	53.5
	kW	3.53	3.60	3.67	3.72	3.62	3.70	3.71	3.78	3.71	3.77	3.79	3.80
	CMP	3.05	3.11	3.19	3.24	3.09	3.17	3.18	3.25	3.13	3.20	3.21	3.22
	LDB	35.9	41.8	47.8	54.0	40.1	45.7	52.4	57.8	43.7	48.9	55.3	61.0
	LWB	34.5	40.4	46.7	53.4	37.8	43.8	50.5	56.8	40.4	46.3	52.9	59.4
75	TCG	44.6	48.6	51.9	54.1	47.0	50.1	53.1	54.9	48.6	51.6	53.4	55.0
	SHG	42.2	37.4	31.8	25.9	46.1	40.0	33.4	26.6	48.6	42.6	34.4	27.1
	TC	43.7	47.7	51.0	53.2	45.9	49.0	52.0	53.8	47.4	50.3	52.1	53.8
	kW	3.86	3.97	4.05	4.11	3.97	4.04	4.13	4.19	4.05	4.14	4.18	4.24
	CMP	3.37	3.48	3.56	3.63	3.44	3.50	3.60	3.65	3.47	3.55	3.60	3.65
	LDB	36.5	41.6	47.4	53.7	40.1	45.6	51.4	57.4	43.8	48.4	54.7	60.3
	LWB	35.3	40.5	46.5	53.1	38.2	44.0	49.9	56.4	40.6	46.4	52.6	58.9
85	TCG	41.2	45.4	49.2	52.1	43.7	47.4	51.0	53.5	46.2	48.9	52.0	54.2
	SHG	39.7	35.4	30.4	24.9	43.5	38.5	32.4	25.9	46.2	41.3	34.0	26.7
	TC	40.3	44.5	48.3	51.2	42.7	46.3	50.0	52.4	44.9	47.7	50.8	52.9
	kW	4.13	4.30	4.41	4.51	4.28	4.40	4.53	4.61	4.43	4.50	4.60	4.68
	CMP	3.64	3.81	3.92	4.01	3.74	3.86	3.98	4.06	3.84	3.91	4.01	4.09
	LDB	37.8	42.4	47.9	53.9	41.2	45.8	51.3	57.3	44.5	48.4	54.1	59.9
	LWB	36.5	41.5	47.0	53.2	39.1	44.5	50.1	56.3	41.0	46.7	52.5	58.6
95	TCG	37.9	41.8	46.3	49.8	40.4	43.9	47.9	51.0	42.8	45.5	49.2	52.1
	SHG	37.1	33.2	28.8	23.8	40.4	36.4	30.8	24.8	42.8	39.4	32.8	25.9
	TC	37.1	40.9	45.4	48.9	39.3	42.8	46.8	50.0	41.6	44.3	48.0	50.9
	kW	4.41	4.60	4.81	4.93	4.58	4.75	4.90	5.02	4.74	4.87	5.00	5.12
	CMP	3.92	4.10	4.31	4.43	4.03	4.20	4.35	4.47	4.15	4.27	4.40	4.52
	LDB	39.2	43.6	48.5	54.2	42.8	46.5	51.8	57.5	46.0	48.8	54.2	59.8
	LWB	37.7	42.7	47.7	53.5	40.1	45.4	50.7	56.6	41.8	47.4	52.9	58.7
105	TCG	34.7	38.2	42.4	46.6	37.2	40.1	44.4	48.2	39.5	41.6	45.8	49.1
	SHG	34.6	31.0	26.8	22.4	37.2	34.0	29.1	23.6	39.5	36.9	31.1	24.6
	TC	33.9	37.4	41.6	45.8	36.2	39.1	43.4	47.2	38.4	40.4	44.6	47.9
	kW	4.70	4.89	5.13	5.33	4.89	5.05	5.28	5.45	5.06	5.18	5.40	5.54
	CMP	4.20	4.39	4.62	4.83	4.34	4.49	4.73	4.90	4.46	4.58	4.80	4.94
	LDB	40.7	44.9	49.7	54.9	44.5	47.6	52.5	57.8	47.6	49.8	54.6	60.2
	LWB	38.9	43.9	48.9	54.2	41.0	46.4	51.5	57.0	42.6	48.3	53.5	59.1
115	TCG	31.8	34.8	38.7	42.9	34.2	36.4	40.4	44.6	36.3	37.7	41.7	45.7
	SHG	31.8	28.8	24.8	20.7	34.2	31.7	27.0	22.1	36.3	34.4	29.0	23.2
	TC	31.0	33.9	37.9	42.1	33.3	35.4	39.4	43.6	35.1	36.6	40.6	44.6
	kW	5.00	5.19	5.44	5.72	5.21	5.35	5.60	5.86	5.39	5.48	5.74	5.97
	CMP	4.49	4.68	4.94	5.21	4.65	4.79	5.05	5.31	4.78	4.88	5.13	5.36
	LDB	42.5	46.2	51.0	55.9	46.2	48.8	53.5	58.6	49.2	50.8	55.5	60.6
	LWB	40.0	45.2	50.1	55.2	41.9	47.5	52.5	57.7	43.4	49.3	54.4	59.6
125	TCG	29.1	31.3	34.9	38.8	31.2	32.9	36.4	40.6	33.1	34.0	37.6	41.8
	SHG	29.1	26.7	22.9	19.0	31.2	29.4	24.9	20.4	33.1	31.9	26.9	21.6
	TC	28.3	30.5	34.2	38.1	30.3	31.9	35.4	39.7	32.0	32.9	36.5	40.7
	kW	5.31	5.49	5.76	6.05	3.53	5.64	5.92	6.25	5.72	5.79	6.06	6.38
	CMP	4.80	4.98	5.25	5.54	4.97	5.08	5.36	5.69	5.10	5.17	5.45	5.77
	LDB	44.5	47.5	52.2	57.2	48.0	49.9	54.6	59.4	50.8	51.9	56.5	61.3
	LWB	41.0	46.4	51.3	56.4	42.8	48.6	53.6	58.6	44.2	50.2	55.3	60.3

Rating condition.

Not recommended for long-term operation.

LEGEND

BF – Bypass Factor
CMP – Compressor
Edb – Entering Dry Bulb
Ewb – Entering Wet Bulb
kW – Total Power
LDB – Leaving Dry Bulb
LWB – Leaving Wet Bulb
SHG – Gross Sensible Capacity (1000 Btuh)
TC – Total Net Cooling Capacity (1000 Btuh)
TCG – Gross Cooling Capacity (1000 Btuh)

*Click here to view Systems Index Table.

NOTES:
1. Direct interpolation is permissible. Do not extrapolate.
2. The SHG is based on 80 F edb temperature of air entering indoor coil.
   Below 80 F edb, subtract (corr factor x cfm) from SHG.
   Above 80 F edb, add (corr factor x cfm) to SHG.
   Correction Factor = 1.10 x (1 - BF) x (edb - 80).

COOLING CAPACITIES (cont)

SYSTEM 25C* — CEILING-SUSPENDED SYSTEM (538BNX, BPX, BEX060 WITH 619CNX060)

TEMP (F) AIR ENTERING OUTDOOR UNIT (Edb)		AIR ENTERING INDOOR UNIT – CFM/BF											
		1040/0.04				1220/0.05				1600/0.06			
		Air Entering Indoor Unit – Ewb (F)											
		57	62	67	72	57	62	67	72	57	62	67	72
55	TCG	68.0	72.4	74.2	76.2	70.4	73.2	75.4	76.8	73.8	74.2	76.4	77.8
	SHG	63.8	55.4	45.5	36.8	68.1	57.7	47.2	37.5	73.8	61.9	49.8	38.8
	TC	66.7	71.1	72.9	74.9	68.9	71.6	73.9	75.3	71.8	72.2	74.4	75.8
	kW	4.17	4.23	4.25	4.29	4.25	4.29	4.32	4.35	4.42	4.42	4.46	4.48
	CMP	3.59	3.66	3.68	3.71	3.63	3.66	3.70	3.72	3.68	3.68	3.72	3.74
	LDB	36.7	42.5	49.4	55.4	40.7	46.8	53.0	58.8	47.7	53.1	58.5	63.4
	LWB	35.2	41.1	48.0	54.8	38.2	44.5	51.0	57.7	42.6	49.1	55.2	61.4
65	TCG	62.7	67.9	72.5	74.5	65.6	70.0	74.3	75.7	69.9	72.5	75.0	77.5
	SHG	59.7	52.5	44.6	35.8	64.4	56.0	46.8	36.8	69.9	62.1	49.7	38.7
	TC	61.5	66.7	71.3	73.3	64.2	68.6	72.8	74.3	68.0	70.7	73.2	75.6
	kW	4.47	4.55	4.63	4.67	4.57	4.64	4.72	4.75	4.75	4.79	4.84	4.89
	CMP	3.91	3.99	4.07	4.11	3.95	4.02	4.11	4.13	4.02	4.07	4.12	4.17
	LDB	37.1	42.3	48.2	54.6	40.6	45.8	51.6	57.9	47.5	51.2	57.2	62.4
	LWB	35.8	41.2	47.1	54.0	38.5	44.2	50.1	56.9	42.6	48.6	54.6	60.7
75	TCG	56.6	61.7	66.8	70.0	59.5	64.0	68.8	71.6	64.5	67.0	70.6	73.3
	SHG	54.6	48.4	41.4	33.6	58.9	52.1	43.8	34.8	64.5	58.6	47.6	36.9
	TC	55.5	60.6	65.6	68.9	58.2	62.7	67.5	70.2	62.8	65.2	68.8	71.6
	kW	4.70	4.83	4.95	5.02	4.82	4.94	5.05	5.11	5.06	5.11	5.20	5.27
	CMP	4.15	4.28	4.40	4.47	4.22	4.34	4.45	4.51	4.35	4.40	4.49	4.55
	LDB	38.3	43.1	48.6	54.6	41.7	46.2	51.7	57.7	48.1	51.1	56.7	62.1
	LWB	36.8	42.1	47.6	54.0	39.3	44.8	50.4	56.8	42.9	48.8	54.6	60.6
85	TCG	50.5	55.6	61.0	65.6	53.4	58.1	63.3	67.4	59.2	61.4	66.1	69.2
	SHG	49.6	44.3	38.2	31.4	53.4	48.2	40.8	32.8	59.2	55.1	45.5	35.1
	TC	49.4	54.5	60.0	64.5	52.2	56.9	62.1	66.2	57.6	59.8	64.5	67.6
	kW	4.93	5.10	5.26	5.38	5.08	5.24	5.38	5.48	5.38	5.43	5.56	5.64
	CMP	4.39	4.56	4.72	4.84	4.49	4.65	4.79	4.89	4.68	4.73	4.86	4.94
	LDB	39.5	43.9	49.0	54.7	42.8	46.6	51.8	57.5	48.8	51.0	56.2	61.8
	LWB	37.9	42.9	48.1	54.0	40.1	45.4	50.7	56.6	43.2	49.1	54.6	60.5
95	TCG	44.9	49.3	54.6	59.4	47.8	51.4	56.6	61.0	52.9	54.7	59.5	63.3
	SHG	44.7	40.0	34.6	28.6	47.8	43.6	37.1	29.9	52.9	50.4	41.9	32.5
	TC	43.9	48.3	53.6	58.4	46.6	50.2	55.5	59.8	51.4	53.2	58.0	61.8
	kW	5.13	5.32	5.54	5.70	5.31	5.46	5.66	5.79	5.63	5.70	5.86	5.98
	CMP	4.60	4.79	5.01	5.17	4.73	4.88	5.08	5.21	4.94	5.01	5.17	5.30
	LDB	40.8	45.0	49.9	55.3	44.4	47.6	52.5	58.0	50.0	51.5	56.5	61.9
	LWB	39.0	44.0	49.1	54.6	40.9	46.4	51.5	57.2	43.8	49.8	55.1	60.7
105	TCG	39.7	43.2	48.0	52.7	42.3	45.1	49.9	54.3	46.8	48.0	52.6	56.7
	SHG	39.7	35.8	30.8	25.5	42.3	39.1	33.3	26.9	46.8	45.3	38.0	29.5
	TC	38.7	42.3	47.1	51.8	41.3	44.0	48.8	53.2	45.4	46.6	51.2	55.3
	kW	5.32	5.51	5.76	5.97	5.52	5.66	5.90	6.08	5.85	5.91	6.12	6.28
	CMP	4.80	5.00	5.24	5.45	4.95	5.09	5.33	5.51	5.18	5.24	5.45	5.61
	LDB	42.5	46.2	51.0	56.2	45.9	48.6	53.4	58.7	51.4	52.4	57.0	62.3
	LWB	39.9	45.2	50.2	55.4	41.7	47.3	52.4	57.8	44.5	50.5	55.7	61.2
115	TCG	34.8	37.6	41.8	46.1	37.2	39.1	43.4	47.7	41.1	41.7	45.7	49.8
	SHG	34.8	31.9	27.3	22.5	37.2	34.8	29.5	23.9	41.1	40.3	33.9	26.4
	TC	34.0	36.7	40.9	45.2	36.2	38.1	42.4	46.7	39.8	40.4	44.4	48.5
	kW	5.50	5.68	5.95	6.19	5.70	5.83	6.09	6.33	6.06	6.09	6.34	6.55
	CMP	4.99	5.17	5.44	5.68	5.15	5.27	5.54	5.77	5.40	5.43	5.68	5.89
	LDB	44.2	47.3	52.1	57.2	47.5	49.7	54.4	59.4	52.8	53.3	57.7	62.8
	LWB	40.9	46.3	51.2	56.4	42.5	48.3	53.4	58.6	45.2	51.2	56.4	61.7
125	TCG	30.1	32.2	35.9	39.8	32.2	33.5	37.2	41.2	35.6	35.7	39.1	43.1
	SHG	30.1	28.1	24.0	19.7	32.2	30.7	26.0	21.0	35.6	35.4	29.9	23.4
	TC	29.3	31.4	35.1	39.1	31.3	32.6	36.3	40.3	34.4	34.5	38.0	41.9
	kW	5.66	5.81	6.11	6.40	5.87	5.97	6.26	6.55	6.23	6.25	6.50	6.77
	CMP	5.16	5.32	5.61	5.91	5.32	5.43	5.71	6.00	5.59	5.60	5.86	6.13
	LDB	46.2	48.5	53.2	58.2	49.2	50.7	55.4	60.3	54.2	54.3	58.5	63.4
	LWB	41.9	47.4	52.3	57.4	43.4	49.3	54.3	59.4	45.8	52.0	57.2	62.3

Rating condition.

Not recommended for long-term operation.

LEGEND

BF – Bypass Factor
CMP – Compressor
Edb – Entering Dry Bulb
Ewb – Entering Wet Bulb
kW – Total Power
LDB – Leaving Dry Bulb
LWB – Leaving Wet Bulb
SHG – Gross Sensible Capacity (1000 Btuh)
TC – Total Net Cooling Capacity (1000 Btuh)
TCG – Gross Cooling Capacity (1000 Btuh)

*Click here to view Systems Index Table.

NOTES:
1. Direct interpolation is permissible. Do not extrapolate.
2. The SHG is based on 80 F edb temperature of air entering indoor coil.
   Below 80 F edb, subtract (corr factor x cfm) from SHG.
   Above 80 F edb, add (corr factor x cfm) to SHG.
   Correction Factor = 1.10 x (1 - BF) x (edb - 80).

COOLING CAPACITIES (cont)

SYSTEM 26C* — IN-CEILING CASSETTE SYSTEM (538BNX018 WITH 619FNX024)

TEMP (F) AIR ENTERING OUTDOOR UNIT (Edb)		AIR ENTERING INDOOR UNIT – CFM/BF											
		400/0.03				430/0.04				525/0.05			
		Air Entering Indoor Unit – Ewb (F)											
		57	62	67	72	57	62	67	72	57	62	67	72
55	TCG	21.5	23.0	23.6	24.9	21.9	23.2	24.0	25.0	22.8	23.3	24.4	25.4
	SHG	20.8	18.0	14.6	12.0	21.4	18.4	15.0	12.1	22.8	19.1	15.6	12.5
	TC	21.2	22.6	23.2	24.5	21.5	22.8	23.5	24.6	22.3	22.8	23.8	24.9
	kW	1.44	1.48	1.49	1.52	1.46	1.49	1.51	1.54	1.50	1.51	1.54	1.57
	CMP	1.17	1.21	1.22	1.26	1.18	1.21	1.23	1.26	1.20	1.21	1.24	1.27
	LDB	38.7	44.3	51.2	56.4	40.4	46.1	52.6	57.9	45.5	51.2	56.6	61.5
	LWB	37.0	42.8	49.5	55.7	38.3	44.2	50.7	56.9	41.5	47.9	53.9	59.9
65	TCG	19.9	21.5	23.1	23.6	20.4	21.8	23.3	23.9	21.5	22.5	23.3	24.3
	SHG	19.6	17.0	14.4	11.4	20.3	17.6	14.7	11.6	21.5	19.0	15.2	12.0
	TC	19.6	21.1	22.7	23.2	20.0	21.4	22.9	23.5	21.0	22.0	22.8	23.9
	kW	1.55	1.58	1.62	1.64	1.57	1.59	1.64	1.66	1.61	1.64	1.66	1.69
	CMP	1.28	1.31	1.36	1.37	1.29	1.32	1.37	1.38	1.31	1.34	1.36	1.40
	LDB	39.0	44.4	50.0	56.5	40.5	45.9	51.5	57.7	45.9	49.8	56.0	61.2
	LWB	37.7	43.2	48.9	55.7	38.8	44.5	50.2	56.8	41.7	47.6	53.7	59.7
75	TCG	18.1	19.6	21.3	22.3	18.6	19.9	21.5	22.5	19.8	20.7	21.9	23.0
	SHG	18.0	15.8	13.5	10.8	18.6	16.4	13.8	11.0	19.8	18.0	14.6	11.5
	TC	17.8	19.2	20.9	21.9	18.2	19.5	21.2	22.1	19.4	20.2	21.4	22.6
	kW	1.64	1.68	1.73	1.76	1.66	1.70	1.75	1.78	1.72	1.74	1.78	1.82
	CMP	1.38	1.42	1.47	1.50	1.39	1.43	1.48	1.51	1.42	1.45	1.49	1.53
	LDB	40.4	45.1	50.5	56.5	41.9	46.4	51.8	57.8	46.8	49.9	55.7	61.1
	LWB	38.6	44.0	49.5	55.8	39.6	45.2	50.7	57.0	42.2	48.1	53.9	59.8
85	TCG	16.3	17.7	19.5	21.0	16.8	18.1	19.8	21.0	18.2	18.9	20.4	21.7
	SHG	16.3	14.7	12.5	10.2	16.8	15.2	12.9	10.3	18.2	17.0	14.0	10.9
	TC	16.0	17.4	19.1	20.7	16.5	17.7	19.4	20.6	17.7	18.5	20.0	21.3
	kW	1.73	1.78	1.84	1.89	1.75	1.80	1.86	1.90	1.82	1.85	1.90	1.95
	CMP	1.47	1.52	1.58	1.63	1.49	1.53	1.59	1.63	1.53	1.56	1.61	1.66
	LDB	41.8	45.8	50.9	56.5	43.4	46.9	52.1	57.9	47.7	49.9	55.4	60.9
	LWB	39.6	44.9	50.1	55.8	40.4	45.9	51.2	57.1	42.7	48.6	54.0	59.8
95	TCG	14.7	15.7	17.4	19.0	15.1	16.0	17.7	19.2	16.3	16.8	18.4	19.7
	SHG	14.7	13.3	11.4	9.28	15.1	13.9	11.8	9.51	16.3	15.5	12.9	10.1
	TC	14.4	15.4	17.1	18.7	14.8	15.7	17.4	18.9	15.9	16.4	18.0	19.3
	kW	1.80	1.86	1.94	1.99	1.83	1.88	1.95	2.01	1.92	1.94	2.00	2.06
	CMP	1.55	1.60	1.68	1.74	1.57	1.62	1.69	1.75	1.63	1.65	1.71	1.77
	LDB	43.5	46.9	51.8	57.2	45.1	48.0	52.9	58.3	49.2	50.8	55.8	61.2
	LWB	40.5	46.0	51.1	56.6	41.3	47.0	52.1	57.6	43.4	49.4	54.7	60.2
105	TCG	13.1	13.9	15.4	17.0	13.5	14.1	15.6	17.2	14.5	14.8	16.3	17.8
	SHG	13.1	12.1	10.3	8.40	13.5	12.6	10.6	8.63	14.5	14.1	11.8	9.26
	TC	12.8	13.6	15.1	16.7	13.1	13.8	15.3	16.9	14.1	14.4	15.9	17.4
	kW	1.88	1.92	2.01	2.10	1.91	1.95	2.04	2.12	1.99	2.01	2.09	2.16
	CMP	1.63	1.67	1.76	1.85	1.65	1.69	1.78	1.86	1.71	1.73	1.81	1.88
	LDB	45.3	48.1	52.9	58.0	46.9	49.1	53.9	59.0	50.8	51.7	56.5	61.7
	LWB	41.4	47.2	52.2	57.4	42.2	48.1	53.1	58.3	44.2	50.3	55.4	60.8
115	TCG	11.5	12.1	13.4	14.9	11.9	12.3	13.6	15.1	12.8	12.9	14.2	15.7
	SHG	11.5	10.8	9.18	7.48	11.9	11.3	9.53	7.70	12.8	12.6	10.6	8.35
	TC	11.3	11.8	13.1	14.6	11.6	12.0	13.3	14.8	12.4	12.5	13.8	15.3
	kW	1.95	1.99	2.08	2.18	1.98	2.01	2.10	2.20	2.07	2.07	2.16	2.26
	CMP	1.70	1.74	1.83	1.93	1.72	1.75	1.85	1.95	1.79	1.79	1.88	1.98
	LDB	47.3	49.3	54.1	59.1	48.7	50.2	55.0	60.0	52.5	52.8	57.4	62.3
	LWB	42.4	48.3	53.3	58.4	43.1	49.1	54.2	59.3	45.0	51.2	56.3	61.5
125	TCG	10.0	10.4	11.5	12.8	10.3	10.5	11.7	13.0	11.1	11.1	12.1	13.5
	SHG	10.0	9.67	8.14	6.57	10.3	10.1	8.46	6.77	11.1	11.1	9.41	7.40
	TC	9.80	10.1	11.3	12.6	10.1	10.3	11.4	12.8	10.8	10.8	11.8	13.2
	kW	2.01	2.04	2.14	2.25	2.05	2.06	2.16	2.27	2.13	2.13	2.22	2.34
	CMP	1.77	1.79	1.89	2.00	1.79	1.81	1.91	2.02	1.86	1.85	1.94	2.06
	LDB	49.2	50.5	55.3	60.1	50.6	51.4	56.1	61.0	54.2	53.9	58.3	63.1
	LWB	43.4	49.4	54.4	59.5	44.1	50.2	55.2	60.3	45.8	52.0	57.2	62.3

Rating condition.

Not recommended for long-term operation.

LEGEND

BF – Bypass Factor
CMP – Compressor
Edb – Entering Dry Bulb
Ewb – Entering Wet Bulb
kW – Total Power
LDB – Leaving Dry Bulb
LWB – Leaving Wet Bulb
SHG – Gross Sensible Capacity (1000 Btuh)
TC – Total Net Cooling Capacity (1000 Btuh)
TCG – Gross Cooling Capacity (1000 Btuh)

*Click here to view Systems Index Table.

NOTES:
1. Direct interpolation is permissible. Do not extrapolate.
2. The SHG is based on 80 F edb temperature of air entering indoor coil.
   Below 80 F edb, subtract (corr factor x cfm) from SHG.
   Above 80 F edb, add (corr factor x cfm) to SHG.
   Correction Factor = 1.10 x (1 - BF) x (edb - 80).

COOLING CAPACITIES (cont)

SYSTEM 27C* — IN-CEILING CASSETTE SYSTEM (538BNX024 WITH 619FNX036)

TEMP (F) AIR ENTERING OUTDOOR UNIT (Edb)		AIR ENTERING INDOOR UNIT – CFM/BF											
		635/0.07				745/0.09				915/0.11			
		Air Entering Indoor Unit – Ewb (F)											
		57	62	67	72	57	62	67	72	57	62	67	72
55	TCG	32.1	34.2	35.6	37.3	33.5	34.9	36.4	37.8	35.1	35.3	37.0	38.3
	SHG	32.1	28.2	22.8	18.3	33.5	30.0	24.0	18.7	35.1	31.7	25.2	19.4
	TC	31.7	33.8	35.2	36.9	33.0	34.4	36.0	37.3	34.5	34.7	36.4	37.7
	kW	2.13	2.17	2.20	2.24	2.17	2.20	2.24	2.27	2.24	2.24	2.28	2.31
	CMP	1.82	1.86	1.89	1.93	1.84	1.87	1.91	1.94	1.88	1.88	1.92	1.95
	LDB	44.2	48.5	54.6	59.8	48.1	51.6	57.3	62.4	52.9	55.5	60.6	65.2
	LWB	40.8	46.5	52.6	58.7	42.9	48.8	54.7	60.8	45.2	51.4	57.1	62.9
65	TCG	29.4	31.2	33.9	35.3	31.0	32.2	34.6	36.0	32.5	33.3	34.9	36.6
	SHG	29.4	26.4	22.1	17.3	31.0	28.5	23.4	18.0	32.5	31.2	24.7	18.8
	TC	29.0	30.8	33.5	34.9	30.5	31.7	34.1	35.6	32.0	32.7	34.4	36.0
	kW	2.19	2.22	2.29	2.32	2.24	2.26	2.32	2.36	2.30	2.32	2.36	2.40
	CMP	1.89	1.93	1.99	2.02	1.93	1.95	2.01	2.05	1.96	1.98	2.02	2.06
	LDB	45.1	48.7	53.8	59.6	48.7	51.2	56.5	62.0	53.3	54.4	59.9	64.8
	LWB	41.3	47.0	52.4	58.6	43.1	49.1	54.6	60.6	45.4	51.4	57.1	62.8
75	TCG	26.4	27.9	30.6	32.5	27.9	28.9	31.3	33.1	29.6	30.0	32.0	33.8
	SHG	26.4	24.2	20.4	16.1	27.9	26.3	21.7	16.8	29.6	28.9	23.3	17.8
	TC	26.1	27.5	30.2	32.1	27.5	28.4	30.9	32.7	29.1	29.5	31.5	33.3
	kW	2.21	2.25	2.32	2.37	2.27	2.29	2.35	2.40	2.34	2.35	2.40	2.45
	CMP	1.93	1.97	2.04	2.09	1.97	2.00	2.06	2.11	2.02	2.03	2.08	2.13
	LDB	46.6	49.4	54.3	59.8	50.0	51.7	56.7	62.0	54.1	54.7	59.6	64.6
	LWB	42.1	47.8	53.1	58.9	43.8	49.7	55.1	60.8	45.8	51.8	57.3	62.9
85	TCG	23.5	24.6	27.3	29.6	24.9	25.5	28.1	30.2	26.7	26.7	29.0	31.1
	SHG	23.5	22.0	18.6	14.9	24.9	24.0	20.0	15.6	26.7	26.6	22.0	16.7
	TC	23.1	24.3	27.0	29.3	24.5	25.1	27.7	29.8	26.2	26.2	28.5	30.6
	kW	2.24	2.27	2.35	2.42	2.30	2.32	2.39	2.45	2.38	2.38	2.44	2.50
	CMP	1.97	2.01	2.09	2.15	2.02	2.04	2.11	2.17	2.07	2.08	2.14	2.20
	LDB	48.1	50.1	54.8	60.0	51.3	52.2	57.0	62.1	55.0	55.0	59.4	64.5
	LWB	42.8	48.7	53.7	59.2	44.4	50.4	55.6	61.1	46.2	52.3	57.6	63.1
95	TCG	20.7	21.4	23.8	26.3	21.9	22.2	24.6	26.9	23.4	23.4	25.4	27.6
	SHG	20.7	19.7	16.7	13.4	21.9	21.5	18.1	14.2	23.4	23.4	20.0	15.2
	TC	20.4	21.1	23.5	26.0	21.6	21.8	24.3	26.6	23.0	23.0	25.0	27.2
	kW	2.23	2.26	2.35	2.43	2.29	2.30	2.39	2.46	2.38	2.37	2.44	2.51
	CMP	1.98	2.01	2.10	2.18	2.03	2.04	2.13	2.20	2.09	2.09	2.16	2.22
	LDB	49.7	51.1	55.7	60.5	52.7	53.2	57.6	62.5	56.3	56.3	59.8	64.8
	LWB	43.6	49.6	54.6	59.8	45.1	51.2	56.3	61.6	46.8	52.9	58.2	63.5
105	TCG	18.1	18.4	20.5	22.9	19.1	19.2	21.1	23.5	20.4	20.4	21.8	24.1
	SHG	18.1	17.6	14.8	11.9	19.1	19.1	16.0	12.7	20.4	20.4	17.9	13.7
	TC	17.8	18.2	20.2	22.6	18.8	18.8	20.8	23.2	20.0	20.0	21.4	23.7
	kW	2.20	2.22	2.31	2.41	2.26	2.27	2.35	2.45	2.35	2.35	2.41	2.49
	CMP	1.97	1.99	2.08	2.18	2.02	2.02	2.11	2.21	2.08	2.08	2.14	2.23
	LDB	51.3	52.1	56.6	61.3	54.2	54.2	58.4	63.1	57.6	57.6	60.5	65.1
	LWB	44.4	50.5	55.5	60.6	45.8	52.0	57.1	62.2	47.5	53.5	58.8	64.0
115	TCG	15.6	15.7	17.4	19.4	16.5	16.5	17.9	20.0	17.6	17.6	18.5	20.6
	SHG	15.6	15.5	13.0	10.3	16.5	16.5	14.1	11.0	17.6	17.6	15.8	12.1
	TC	15.3	15.4	17.2	19.2	16.2	16.2	17.6	19.7	17.2	17.2	18.1	20.2
	kW	2.16	2.16	2.26	2.36	2.22	2.22	2.30	2.40	2.30	2.30	2.35	2.45
	CMP	1.94	1.95	2.04	2.15	1.99	1.99	2.07	2.18	2.05	2.05	2.10	2.21
	LDB	53.0	53.2	57.6	62.3	55.7	55.7	59.2	63.9	59.0	59.0	61.1	65.7
	LWB	45.3	51.4	56.5	61.5	46.6	52.7	57.9	63.0	48.1	54.0	59.5	64.6
125	TCG	13.2	13.1	14.5	16.3	14.0	14.0	14.9	16.7	14.8	14.8	15.4	17.1
	SHG	13.2	13.1	11.3	8.88	14.0	14.0	12.3	9.53	14.8	14.8	13.8	10.5
	TC	13.0	12.9	14.3	16.0	13.7	13.7	14.7	16.4	14.5	14.5	15.1	16.8
	kW	2.11	2.10	2.19	2.29	2.16	2.16	2.22	2.33	2.24	2.24	2.27	2.38
	CMP	1.91	190	1.99	2.09	1.95	1.95	2.01	2.12	2.01	2.01	2.04	2.15
	LDB	54.7	54.5	58.5	63.2	57.2	57.2	60.0	64.6	60.4	60.4	61.8	66.3
	LWB	46.1	52.3	57.4	62.4	47.3	53.3	58.7	63.7	48.7	54.6	60.1	65.2

Rating condition.

Not recommended for long-term operation.

LEGEND

BF – Bypass Factor
CMP – Compressor
Edb – Entering Dry Bulb
Ewb – Entering Wet Bulb
kW – Total Power
LDB – Leaving Dry Bulb
LWB – Leaving Wet Bulb
SHG – Gross Sensible Capacity (1000 Btuh)
TC – Total Net Cooling Capacity (1000 Btuh)
TCG – Gross Cooling Capacity (1000 Btuh)

*Click here to view Systems Index Table.

NOTES:
1. Direct interpolation is permissible. Do not extrapolate.
2. The SHG is based on 80 F edb temperature of air entering indoor coil.
   Below 80 F edb, subtract (corr factor x cfm) from SHG.
   Above 80 F edb, add (corr factor x cfm) to SHG.
   Correction Factor = 1.10 x (1 - BF) x (edb - 80).

COOLING CAPACITIES (cont)

SYSTEM 28C* — IN-CEILING CASSETTE SYSTEM (538BNX030 WITH 619FNX036)

TEMP (F) AIR ENTERING OUTDOOR UNIT (Edb)		AIR ENTERING INDOOR UNIT – CFM/BF											
		635/0.06				745/0.07				915/0.09			
		Air Entering Indoor Unit – Ewb (F)											
		57	62	67	72	57	62	67	72	57	62	67	72
55	TCG	28.0	30.4	32.7	33.8	29.7	31.3	33.5	34.6	31.5	32.3	34.1	35.1
	SHG	28.0	24.8	20.8	16.4	29.7	26.6	22.0	17.0	31.5	29.0	23.3	17.7
	TC	27.7	30.1	32.4	33.5	29.3	31.0	33.1	34.2	31.1	31.8	33.6	34.6
	kW	1.70	1.71	1.73	1.74	1.72	1.73	1.76	1.77	1.77	1.76	1.78	1.80
	CMP	1.44	1.45	1.47	1.48	1.44	1.46	1.48	1.49	1.46	1.46	1.48	1.50
	LDB	41.3	45.9	51.4	57.6	45.1	48.8	54.3	60.2	49.9	52.4	57.9	63.3
	LWB	39.4	44.7	50.3	56.8	41.3	47.1	52.8	59.0	43.7	49.9	55.6	61.6
65	TCG	26.9	29.1	31.5	33.0	28.5	30.0	32.3	33.8	30.4	31.0	33.0	34.4
	SHG	26.9	24.0	20.2	16.1	28.5	25.9	21.5	16.8	30.4	28.5	23.1	17.6
	TC	26.6	28.7	31.1	32.7	28.1	29.6	31.9	33.4	29.9	30.5	32.6	34.0
	kW	1.89	1.91	1.93	1.94	1.92	1.93	1.95	1.97	1.96	1.96	1.99	2.00
	CMP	1.63	1.65	1.67	1.68	1.64	1.65	1.68	1.70	1.66	1.66	1.69	1.70
	LDB	42.5	46.6	51.9	57.8	46.2	49.3	54.6	60.3	50.7	52.6	57.8	63.2
	LWB	40.0	45.4	50.9	57.0	41.9	47.7	53.2	59.2	44.1	50.3	55.8	61.7
75	TCG	25.8	27.7	30.2	32.2	27.3	28.6	31.1	32.9	29.3	29.7	32.0	33.8
	SHG	25.8	23.3	19.7	15.8	27.3	25.2	21.0	16.5	29.3	27.9	22.8	17.5
	TC	25.5	27.4	29.9	31.9	27.0	28.3	30.7	32.6	28.8	29.3	31.5	33.3
	kW	2.08	2.10	2.12	2.15	2.11	2.13	2.15	2.17	2.16	2.16	2.19	2.21
	CMP	1.82	1.84	1.87	1.89	1.84	1.85	1.88	1.90	1.86	1.87	1.89	1.91
	LDB	43.7	47.2	52.4	57.9	47.2	49.8	54.9	60.4	51.5	52.8	57.8	63.1
	LWB	40.6	46.1	51.4	57.3	42.4	48.3	53.6	59.5	44.5	50.7	56.1	61.8
85	TCG	24.7	26.3	29.0	31.4	26.2	27.3	29.9	32.1	28.1	28.5	30.9	33.1
	SHG	24.7	22.5	19.1	15.5	26.2	24.6	20.6	16.2	28.1	27.4	22.6	17.4
	TC	24.4	26.0	28.7	31.1	25.8	26.9	29.6	31.7	27.7	28.0	30.5	32.6
	kW	2.27	2.29	2.32	2.35	2.31	2.32	2.35	2.38	2.35	2.36	2.39	2.42
	CMP	2.01	2.04	2.07	2.10	2.04	2.05	2.08	2.10	2.06	2.07	2.09	2.12
	LDB	44.8	47.9	52.8	58.1	48.2	50.2	55.1	60.5	52.3	53.0	57.8	63.0
	LWB	41.2	46.8	51.9	57.5	42.9	48.8	54.0	59.7	44.9	51.0	56.3	61.9
95	TCG	23.6	24.9	27.6	30.1	25.0	25.8	28.5	30.9	26.7	26.9	29.4	31.7
	SHG	23.6	21.7	18.5	15.0	25.0	23.7	19.9	15.8	26.7	26.4	22.0	16.9
	TC	23.3	24.6	27.3	29.8	24.6	25.4	28.1	30.6	26.3	26.5	29.0	31.3
	kW	2.49	2.51	2.55	2.59	2.53	2.54	2.58	2.61	2.59	2.59	2.62	2.65
	CMP	2.23	2.26	2.30	2.33	2.26	2.27	2.31	2.34	2.29	2.30	2.33	2.36
	LDB	46.0	48.7	53.5	58.6	49.4	50.9	55.7	60.8	53.4	53.7	58.2	63.3
	LWB	41.8	47.5	52.6	58.0	43.5	49.5	54.6	60.0	45.4	51.6	56.8	62.2
105	TCG	22.5	23.5	26.0	28.6	23.8	24.4	26.8	29.4	25.4	25.4	27.7	30.2
	SHG	22.5	21.0	17.7	14.3	23.8	22.9	19.2	15.2	25.4	25.4	21.2	16.4
	TC	22.2	23.2	25.7	28.3	23.4	24.0	26.5	29.0	25.0	25.0	27.3	29.8
	kW	2.73	2.75	2.80	2.84	2.77	2.79	2.83	2.87	2.83	2.83	2.87	2.91
	CMP	2.48	2.50	2.55	2.59	2.51	2.52	2.57	2.60	2.54	2.54	2.58	2.62
	LDB	47.2	49.4	54.3	59.2	50.5	51.6	56.3	61.3	54.4	54.4	58.7	63.6
	LWB	42.4	48.3	53.4	58.6	44.0	50.1	55.3	60.5	45.9	52.1	57.3	62.6
115	TCG	21.4	22.2	24.4	27.1	22.6	22.9	25.2	27.8	24.1	24.1	26.0	28.6
	SHG	21.4	20.2	17.0	13.7	22.6	22.1	18.4	14.6	24.1	24.1	20.5	15.8
	TC	21.1	21.9	24.1	26.8	22.3	22.6	24.8	27.5	23.6	23.7	25.6	28.2
	kW	3.01	3.03	3.08	3.12	3.05	3.06	3.11	3.15	3.11	3.11	3.16	3.19
	CMP	2.76	2.77	2.83	2.87	2.78	2.79	2.85	2.88	2.82	2.82	2.87	2.90
	LDB	48.5	50.2	55.0	59.9	51.6	52.3	57.0	61.8	55.4	55.4	59.2	64.0
	LWB	43.0	49.0	54.1	59.3	44.6	50.7	55.9	61.1	46.4	52.5	57.9	63.1
125	TCG	20.2	20.8	23.0	25.5	21.4	21.5	23.7	26.2	22.8	22.8	24.4	26.9
	SHG	20.2	19.4	16.3	13.1	21.4	21.2	17.7	14.0	22.8	22.8	19.7	15.2
	TC	19.9	20.5	22.7	25.2	21.1	21.2	23.4	25.8	22.4	22.4	23.9	26.5
	kW	3.31	3.32	3.38	3.42	3.35	3.35	3.41	3.46	3.41	3.41	3.45	3.50
	CMP	3.06	3.07	3.13	3.17	3.09	3.09	3.15	3.19	3.12	3.12	3.17	3.21
	LDB	49.8	51.0	55.8	60.6	52.8	53.1	57.6	62.4	56.5	56.4	59.8	64.5
	LWB	43.7	49.7	54.8	60.0	45.2	51.3	56.5	61.7	46.9	53.0	58.4	63.5

Rating condition.

LEGEND

BF – Bypass Factor
CMP – Compressor
Edb – Entering Dry Bulb
Ewb – Entering Wet Bulb
kW – Total Power
LDB – Leaving Dry Bulb
LWB – Leaving Wet Bulb
SHG – Gross Sensible Capacity (1000 Btuh)
TC – Total Net Cooling Capacity (1000 Btuh)
TCG – Gross Cooling Capacity (1000 Btuh)

*Click here to view Systems Index Table.

NOTES:
1. Direct interpolation is permissible. Do not extrapolate.
2. The SHG is based on 80 F edb temperature of air entering indoor coil.
   Below 80 F edb, subtract (corr factor x cfm) from SHG.
   Above 80 F edb, add (corr factor x cfm) to SHG.
   Correction Factor = 1.10 x (1 - BF) x (edb - 80).

COOLING CAPACITIES (cont)

SYSTEM 29C* — IN-CEILING CASSETTE SYSTEM (538BNX036 SINGLE-PHASE UNIT WITH 619FNX048)

TEMP (F) AIR ENTERING OUTDOOR UNIT (Edb)		AIR ENTERING INDOOR UNIT – CFM/BF											
		680/0.09				880/0.12				1100/0.15			
		Air Entering Indoor Unit – Ewb (F)											
		57	62	67	72	57	62	67	72	57	62	67	72
55	TCG	32.3	34.6	36.4	38.0	34.3	36.1	37.0	38.5	35.7	36.9	38.0	39.5
	SHG	31.5	27.4	22.8	18.4	34.3	30.3	24.1	19.1	35.7	32.8	25.8	20.0
	TC	31.9	34.2	36.0	37.6	33.8	35.5	36.5	38.0	35.1	36.3	37.3	38.8
	kW	2.15	2.18	2.22	2.25	2.21	2.25	2.26	2.29	2.27	2.30	2.32	2.35
	CMP	1.87	1.90	1.94	1.97	1.90	1.93	1.94	1.98	1.92	1.95	1.97	2.00
	LDB	41.3	46.5	52.1	57.6	47.5	51.4	57.3	62.2	53.0	55.3	60.7	65.1
	LWB	38.8	44.4	50.5	56.8	42.6	48.4	54.6	60.6	45.3	51.1	57.1	62.9
65	TCG	31.1	33.6	35.6	37.8	33.3	34.9	36.8	38.1	35.2	36.0	38.0	39.0
	SHG	30.6	26.9	22.4	18.3	33.3	29.7	24.3	19.0	35.2	32.6	26.4	20.0
	TC	30.7	33.1	35.2	37.4	32.8	34.3	36.2	37.6	34.5	35.3	37.3	38.4
	kW	2.39	2.43	2.46	2.51	2.45	2.48	2.51	2.54	2.52	2.54	2.58	2.61
	CMP	2.11	2.15	2.18	2.23	2.14	2.17	2.20	2.23	2.17	2.19	2.23	2.26
	LDB	41.5	46.3	51.9	57.2	47.8	51.3	56.6	61.9	52.8	54.8	59.7	64.8
	LWB	39.1	44.6	50.5	56.5	42.7	48.5	54.3	60.4	45.2	51.2	56.8	62.7
75	TCG	29.4	31.9	34.2	36.5	31.9	33.4	35.6	37.3	33.8	34.5	36.8	38.0
	SHG	29.2	25.8	21.8	17.7	31.9	29.0	23.8	18.7	33.8	32.0	26.0	19.7
	TC	29.0	31.5	33.8	36.1	31.4	32.9	35.1	36.8	33.2	33.9	36.1	37.4
	kW	2.64	2.69	2.74	2.79	2.72	2.76	2.80	2.84	2.80	2.82	2.87	2.90
	CMP	2.36	2.42	2.46	2.51	2.41	2.45	2.49	2.53	2.46	2.47	2.52	2.55
	LDB	42.4	46.8	52.1	57.4	48.4	51.3	56.5	61.7	53.3	54.7	59.5	64.6
	LWB	39.8	45.1	50.8	56.7	43.0	48.8	54.5	60.4	45.4	51.4	56.9	62.8
85	TCG	27.8	30.2	32.9	35.2	30.5	31.9	34.4	36.5	32.5	33.1	35.5	37.0
	SHG	27.8	24.8	21.1	17.1	30.5	28.2	23.4	18.4	32.5	31.4	25.6	19.4
	TC	27.4	29.8	32.5	34.8	30.0	31.4	33.9	36.0	31.8	32.5	34.9	36.3
	kW	2.89	2.96	3.02	3.07	3.00	3.04	3.09	3.14	3.08	3.10	3.16	3.19
	CMP	2.61	2.68	2.75	2.80	2.69	2.73	2.78	2.83	2.74	2.76	2.82	2.84
	LDB	43.4	47.3	52.3	57.6	49.1	51.4	56.4	61.5	53.7	54.6	59.3	64.5
	LWB	40.4	45.7	51.1	56.8	43.3	49.1	54.6	60.3	45.6	51.6	57.0	62.8
95	TCG	26.2	28.2	31.1	33.7	28.7	29.8	32.6	35.0	30.8	31.2	33.6	35.8
	SHG	26.2	23.6	20.2	16.5	28.7	26.9	22.5	17.8	30.8	30.1	24.8	19.0
	TC	25.8	27.9	30.7	33.3	28.2	29.3	32.1	34.5	30.2	30.6	33.0	35.2
	kW	3.17	3.24	3.34	3.41	3.29	3.33	3.41	3.47	3.40	3.41	3.47	3.54
	CMP	2.90	2.97	3.07	3.14	2.98	3.02	3.11	3.17	3.06	3.07	3.13	3.20
	LDB	44.6	48.1	52.8	57.9	50.1	52.0	56.7	61.7	54.4	55.0	59.5	64.4
	LWB	41.0	46.5	51.6	57.2	43.8	49.7	55.0	60.6	46.0	52.0	57.3	62.9
105	TCG	24.6	26.3	29.0	31.9	26.9	27.8	30.5	33.1	28.8	29.0	31.6	34.0
	SHG	24.6	22.4	19.1	15.7	26.9	25.6	21.5	17.0	28.8	28.6	23.8	18.3
	TC	24.3	25.9	28.6	31.5	26.5	27.3	30.1	32.6	28.3	28.4	31.0	33.4
	kW	3.48	3.54	3.65	3.78	3.60	3.63	3.75	3.83	3.71	3.72	3.82	3.90
	CMP	3.21	3.27	3.38	3.51	3.30	3.33	3.44	3.53	3.37	3.38	3.49	3.56
	LDB	45.8	48.9	53.6	58.5	51.2	52.7	57.2	62.0	55.4	55.7	59.8	64.6
	LWB	41.7	47.3	52.4	57.7	44.4	50.3	55.5	60.9	46.4	52.5	57.7	63.1
115	TCG	23.1	24.4	26.9	29.6	25.2	25.7	28.3	31.0	26.9	27.0	29.2	31.9
	SHG	23.1	21.3	18.0	14.7	25.2	24.3	20.3	16.1	26.9	26.9	22.6	17.5
	TC	22.7	24.0	26.5	29.3	24.7	25.3	27.8	30.5	26.4	26.4	28.7	31.3
	kW	3.81	3.87	3.98	4.11	3.93	3.96	4.08	4.21	4.05	4.05	4.16	4.28
	CMP	3.54	3.60	3.71	3.85	3.63	3.66	3.78	3.91	3.72	3.72	3.83	3.95
	LDB	47.2	49.8	54.5	59.3	52.4	53.4	57.8	62.5	56.5	56.5	60.3	64.9
	LWB	42.4	48.1	53.2	58.4	45.0	51.0	56.2	61.4	46.9	53.0	58.2	63.5
125	TCG	21.5	22.5	24.8	27.3	23.5	23.7	26.0	28.6	25.0	25.0	26.8	29.6
	SHG	21.5	20.1	17.0	13.7	23.5	23.0	19.2	15.2	25.0	25.0	21.4	16.6
	TC	21.1	22.1	24.5	27.0	23.0	23.2	25.6	28.2	24.5	24.4	26.3	29.0
	kW	4.15	4.20	4.33	4.47	4.28	4.30	4.42	4.60	4.40	4.40	4.51	4.68
	CMP	3.88	3.94	4.06	4.21	3.99	4.00	4.13	4.30	4.07	4.07	4.18	4.35
	LDB	48.6	50.6	55.3	60.1	53.6	54.1	58.5	63.1	57.5	57.5	60.9	65.3
	LWB	43.1	48.9	54.1	59.3	45.6	51.6	56.8	62.0	47.4	53.4	58.8	63.9

Rating condition.

Not recommended for long-term operation.

LEGEND

BF – Bypass Factor
CMP – Compressor
Edb – Entering Dry Bulb
Ewb – Entering Wet Bulb
kW – Total Power
LDB – Leaving Dry Bulb
LWB – Leaving Wet Bulb
SHG – Gross Sensible Capacity (1000 Btuh)
TC – Total Net Cooling Capacity (1000 Btuh)
TCG – Gross Cooling Capacity (1000 Btuh)

*Click here to view Systems Index Table.

NOTES:
1. Direct interpolation is permissible. Do not extrapolate.
2. The SHG is based on 80 F edb temperature of air entering indoor coil.
   Below 80 F edb, subtract (corr factor x cfm) from SHG.
   Above 80 F edb, add (corr factor x cfm) to SHG.
   Correction Factor = 1.10 x (1 - BF) x (edb - 80).

COOLING CAPACITIES (cont)

SYSTEM 30C* — IN-CEILING CASSETTE SYSTEM (538BPX, BEX036 3-PHASE UNIT WITH 619FNX048)

TEMP (F) AIR ENTERING OUTDOOR UNIT (Edb)		AIR ENTERING INDOOR UNIT – CFM/BF											
		680/0.08				880/0.11				1100/0.14			
		Air Entering Indoor Unit – Ewb (F)											
		57	62	67	72	57	62	67	72	57	62	67	72
55	TCG	35.4	35.7	38.9	35.7	35.9	36.6	38.2	35.6	38.1	35.6	35.0	34.8
	SHG	33.9	27.1	23.8	17.5	35.9	28.6	23.7	17.4	38.1	28.1	21.3	16.9
	TC	35.0	35.3	38.4	35.3	35.4	36.0	37.6	35.0	37.4	34.9	34.3	34.1
	kW	2.15	2.04	2.19	2.06	2.12	2.14	2.17	2.05	2.26	2.13	2.06	2.03
	CMP	1.80	1.69	1.84	1.70	1.74	1.76	1.79	1.67	1.84	1.71	1.65	1.62
	LDB	39.4	47.9	51.8	59.6	47.0	54.0	58.6	64.5	52.0	59.9	65.0	68.2
	LWB	37.3	44.3	49.8	58.5	42.3	48.6	54.6	62.1	44.8	52.0	58.4	64.5
65	TCG	33.2	34.3	37.3	35.9	34.5	35.4	37.5	36.4	36.6	35.1	35.7	36.3
	SHG	32.2	26.6	23.1	17.5	34.5	28.6	23.8	17.9	36.6	29.2	22.9	18.0
	TC	32.8	33.9	36.9	35.5	33.9	34.9	36.9	35.9	35.9	34.4	35.0	35.6
	kW	2.43	2.39	2.53	2.46	2.45	2.48	2.55	2.50	2.57	2.50	2.50	2.52
	CMP	2.07	2.03	2.16	2.10	2.06	2.09	2.15	2.10	2.15	2.07	2.07	2.09
	LDB	40.5	47.5	51.8	58.8	47.4	53.1	57.7	63.4	52.4	58.2	63.1	66.8
	LWB	38.2	44.6	50.0	57.8	42.5	48.7	54.4	61.3	45.0	51.8	57.8	63.8
75	TCG	31.0	32.9	35.8	36.2	33.0	34.2	36.8	37.3	35.0	34.6	36.4	37.8
	SHG	30.5	26.1	22.4	17.6	33.0	28.6	23.9	18.5	35.0	30.3	24.5	19.1
	TC	30.6	32.5	35.4	35.7	32.5	33.7	36.2	36.8	34.3	34.0	35.8	37.2
	kW	2.71	2.75	2.86	2.87	2.79	2.83	2.92	2.94	2.89	2.87	2.94	3.00
	CMP	2.34	2.38	2.49	2.49	2.39	2.42	2.52	2.54	2.46	2.43	2.50	2.56
	LDB	41.5	47.0	51.8	58.0	47.8	52.2	56.8	62.2	52.8	56.5	61.1	65.4
	LWB	39.1	44.8	50.3	57.1	42.7	48.7	54.3	60.6	45.2	51.6	57.2	63.0
85	TCG	28.8	31.5	34.3	36.4	31.6	33.1	36.0	38.1	33.4	34.1	37.1	39.4
	SHG	28.7	25.6	21.8	17.6	31.6	28.6	24.1	19.0	33.4	31.4	26.1	20.2
	TC	28.4	31.1	33.9	36.0	31.1	32.5	35.5	37.6	32.8	33.5	36.5	38.7
	kW	2.99	3.11	3.19	3.27	3.13	3.17	3.30	3.38	3.21	3.24	3.38	3.48
	CMP	2.60	2.72	2.81	2.89	2.71	2.75	2.88	2.97	2.76	2.79	2.93	3.03
	LDB	42.5	46.6	51.7	57.2	48.2	51.3	55.9	61.1	53.2	54.8	59.2	64.0
	LWB	39.9	45.1	50.5	56.5	42.9	48.8	54.1	59.9	45.4	51.3	56.6	62.3
95	TCG	26.6	28.9	32.1	34.8	29.4	30.7	33.7	36.5	31.6	32.2	35.0	37.9
	SHG	26.6	24.0	20.7	16.9	29.4	27.5	23.0	18.4	31.6	30.8	25.4	19.8
	TC	26.2	28.5	31.7	34.5	28.9	30.2	33.2	36.0	31.0	31.6	34.4	37.2
	kW	3.25	3.38	3.55	3.65	3.43	3.51	3.64	3.77	3.59	3.62	3.74	3.88
	CMP	2.86	2.98	3.15	3.26	3.00	3.08	3.21	3.34	3.12	3.15	3.28	3.42
	LDB	44.1	47.7	52.3	57.4	49.5	51.5	56.2	61.1	53.8	54.5	59.1	63.8
	LWB	40.8	46.1	51.2	56.7	43.6	49.4	54.6	60.0	45.7	51.7	56.9	62.3
105	TCG	24.6	26.4	29.3	32.4	27.1	28.0	30.9	34.2	29.1	29.3	32.2	35.3
	SHG	24.6	22.5	19.2	15.9	27.1	25.8	21.7	17.5	29.1	28.8	24.1	18.9
	TC	24.2	26.0	28.9	32.1	26.6	27.5	30.5	33.8	28.5	28.7	31.6	34.7
	kW	3.53	3.65	3.83	4.04	3.72	3.78	3.97	4.18	3.89	3.91	4.09	4.26
	CMP	3.13	3.24	3.43	3.63	3.28	3.34	3.54	3.75	3.42	3.43	3.61	3.78
	LDB	45.8	48.7	53.3	58.1	51.0	52.4	56.8	61.4	55.1	55.4	59.4	64.0
	LWB	41.7	47.2	52.2	57.3	44.3	50.2	55.3	60.4	46.3	52.3	57.5	62.7
115	TCG	22.5	23.9	26.6	29.5	24.8	25.3	28.0	31.1	26.7	26.7	29.1	32.2
	SHG	22.5	21.0	17.8	14.6	24.8	24.0	20.2	16.1	26.7	26.7	22.5	17.6
	TC	22.2	23.5	26.2	29.1	24.3	24.9	27.6	30.6	26.1	26.1	28.5	31.6
	kW	3.83	3.93	4.13	4.35	4.03	4.07	4.27	4.50	4.20	4.20	4.39	4.62
	CMP	3.41	3.51	3.71	3.93	3.58	3.62	3.82	4.05	3.72	3.72	3.90	4.13
	LDB	47.5	49.9	54.4	59.1	52.5	53.3	57.7	62.3	56.4	56.4	60.1	64.6
	LWB	42.6	48.2	53.2	58.3	45.0	51.0	56.1	61.2	46.9	52.9	58.2	63.3
125	TCG	20.6	21.4	23.9	26.6	22.6	22.8	25.2	28.0	24.3	24.2	26.1	29.0
	SHG	20.6	19.4	16.5	13.4	22.6	22.3	18.7	14.8	24.3	24.2	21.0	16.3
	TC	20.2	21.1	23.6	26.3	22.1	22.3	24.7	27.5	23.7	23.7	25.5	28.4
	kW	4.13	4.21	4.43	4.66	4.34	4.36	4.57	4.82	4.52	4.52	4.69	4.94
	CMP	3.70	3.79	4.00	4.24	3.88	3.90	4.11	4.36	4.02	4.02	4.19	4.44
	LDB	49.3	51.0	55.5	60.1	54.0	54.3	58.6	63.1	57.7	57.7	60.8	65.3
	LWB	43.4	49.3	54.3	59.3	45.8	51.9	56.9	62.0	47.5	53.5	58.8	63.9

Rating condition.

Not recommended for long-term operation.

LEGEND

BF – Bypass Factor
CMP – Compressor
Edb – Entering Dry Bulb
Ewb – Entering Wet Bulb
kW – Total Power
LDB – Leaving Dry Bulb
LWB – Leaving Wet Bulb
SHG – Gross Sensible Capacity (1000 Btuh)
TC – Total Net Cooling Capacity (1000 Btuh)
TCG – Gross Cooling Capacity (1000 Btuh)

*Click here to view Systems Index Table.

NOTES:
1. Direct interpolation is permissible. Do not extrapolate.
2. The SHG is based on 80 F edb temperature of air entering indoor coil.
   Below 80 F edb, subtract (corr factor x cfm) from SHG.
   Above 80 F edb, add (corr factor x cfm) to SHG.
   Correction Factor = 1.10 x (1 - BF) x (edb - 80).

INSTANTANEOUS AND INTEGRATED HEATING RATINGS

SYSTEM 15H* — HIGH WALL SYSTEM (538DAX009 WITH 619EAX009)

TEMP (F) AIR ENTERING INDOOR UNIT	AIR ENTERING INDOOR UNIT (CFM)		AIR TEMPERATURE ENTERING OUTDOOR COIL (F)													
			3		7		17		27		37		47		57	
55	230	Cap	3.58	3.29	4.31	3.96	5.37	4.89	6.63	5.89	8.11	7.38	8.77	8.77	9.81	9.81
		kW	0.55		0.58		0.61		0.65		0.71		0.73		0.77	
	250	Cap	3.60	3.31	4.32	3.97	5.38	4.91	6.65	5.91	8.14	7.41	8.83	8.83	9.60	9.60
		kW	0.55		0.57		0.60		0.64		0.69		0.72		0.74	
	270	Cap	3.61	3.32	4.33	3.98	5.40	4.92	6.68	5.93	8.18	7.45	8.87	8.87	9.65	9.65
		kW	0.54		0.57		0.60		0.64		0.68		0.71		0.73	
60	230	Cap	4.11	3.78	4.82	4.43	5.23	4.76	6.45	5.73	7.98	7.27	8.80	8.80	9.77	9.77
		kW	0.58		0.60		0.64		0.69		0.74		0.77		0.82	
	250	Cap	4.15	3.82	4.85	4.46	5.27	4.80	6.51	5.78	8.06	7.33	8.85	8.85	9.58	9.58
		kW	0.58		0.60		0.63		0.68		0.73		0.76		0.79	
	270	Cap	4.17	3.84	4.88	4.48	5.30	4.83	6.56	5.82	8.09	7.36	8.89	8.89	9.63	9.63
		kW	0.57		0.60		0.63		0.67		0.72		0.75		0.77	
65	230	Cap	4.03	3.71	4.80	4.41	5.73	5.22	6.27	5.57	7.79	7.09	8.88	8.88	10.2	10.2
		kW	0.61		0.64		0.67		0.72		0.78		0.82		0.88	
	250	Cap	4.06	3.74	4.83	4.44	5.76	5.26	6.33	5.62	7.89	7.18	8.87	8.87	10.0	10.0
		kW	0.60		0.63		0.66		0.71		0.77		0.80		0.85	
	270	Cap	4.09	3.76	4.86	4.46	5.80	5.29	6.38	5.66	7.96	7.24	8.79	8.79	9.84	9.84
		kW	0.60		0.63		0.66		0.70		0.76		0.78		0.83	
70	230	Cap	3.86	3.55	4.72	4.34	5.05	4.60	6.23	5.53	7.44	6.77	8.91	8.91	9.94	9.94
		kW	0.64		0.67		0.71		0.76		0.81		0.87		0.92	
	250	Cap	3.90	3.59	4.75	4.37	5.09	4.64	6.28	5.57	7.65	6.97	8.96	8.96	10.0	10.0
		kW	0.63		0.67		0.70		0.75		0.80		0.86		0.90	
	270	Cap	3.93	3.61	4.78	4.39	5.12	4.67^	6.32	5.61	7.85	7.15	9.00	9.00^	10.1	10.1
		kW	0.63		0.66		0.70		0.74		0.79		0.84		0.88	
75	230	Cap	3.61	3.32	4.65	4.27	5.07	4.62	6.11	5.43	7.45	6.78	8.67	8.67	10.1	10.1
		kW	0.66		0.70		0.75		0.80		0.86		0.92		0.98	
	250	Cap	3.67	3.38	4.69	4.31	5.13	4.68	6.19	5.50	7.55	6.87	8.87	8.87	10.0	10.0
		kW	0.66		0.70		0.74		0.79		0.84		0.90		0.95	
	270	Cap	3.72	3.42	4.73	4.35	5.19	4.73	6.27	5.56	7.64	6.95	8.91	8.91	10.1	10.1
		kW	0.66		0.69		0.74		0.78		0.83		0.88		0.94	
80	230	Cap	3.27	3.01	4.60	4.23	4.91	4.48	5.92	5.26	7.21	6.56	8.51	8.51	10.2	10.2
		kW	0.69		0.74		0.79		0.84		0.90		0.96		1.1	
	250	Cap	3.34	3.08	4.59	4.22	5.00	4.56	6.03	5.35	7.34	6.68	8.66	8.66	10.2	10.2
		kW	0.68		0.73		0.78		0.83		0.88		0.94		1.0	
	270	Cap	3.41	3.13	4.66	4.28	5.09	4.64	6.13	5.44	7.47	6.80	8.80	8.80	10.0	10.0
		kW	0.68		0.73		0.77		0.82		0.87		0.93		0.98	

Indicates rating condition.

Indicates integrated rating.

LEGEND

Cap – Heating Capacity (1000 Btuh) (includes indoor-fan motor heat)
kW – Total Power Input (includes compressor motor power input, outdoor-fan motor power input, and indoor-fan motor power input)

*Click here to view Systems Index Table.
^ Integrated Rating.

NOTE: Integrated capacity is maximum (instantaneous) capacity less the effect of frost on the outdoor coil and the heat required to defrost it.

INSTANTANEOUS AND INTEGRATED HEATING RATINGS (cont)

SYSTEM 16H* — HIGH WALL SYSTEM (538DNX012 WITH 619ENX012)

TEMP (F) AIR ENTERING INDOOR UNIT	AIR ENTERING INDOOR UNIT (CFM)		AIR TEMPERATURE ENTERING OUTDOOR COIL (F)													
			˛3		7		17		27		37		47		57	
55	255	Cap	4.09	3.77	5.87	5.40	7.63	6.96	9.21	8.18	11.3	10.3	12.5	12.5	14.1	14.1
		kW	0.75		0.81		0.87		0.94		1.02		1.07		1.15	
	292	Cap	4.29	3.95	6.03	5.54	7.86	7.17	9.49	8.43	11.4	10.4	12.4	12.4	14.0	14.0
		kW	0.74		0.80		0.86		0.91		0.98		1.02		1.08	
	315	Cap	4.39	4.04	6.12	5.62	7.99	7.28	9.65	8.57	11.4	10.4	12.2	12.2	13.8	13.8
		kW	0.74		0.79		0.85		0.90		0.96		0.99		1.05	
60	255	Cap	4.59	4.22	6.72	6.17	7.38	6.73	8.96	7.96	11.0	10.0	12.4	12.4	14.0	14.0
		kW	0.77		0.84		0.91		0.98		1.07		1.13		1.21	
	292	Cap	4.77	4.39	6.83	6.27	7.60	6.93	9.25	8.21	11.3	10.3	12.4	12.4	14.0	14.0
		kW	0.77		0.83		0.90		0.96		1.03		1.08		1.14	
	315	Cap	4.87	4.48	6.82	6.27	7.73	7.05	9.40	8.35	11.3	10.3	12.5	12.5	14.1	14.1
		kW	0.76		0.82		0.89		0.94		1.01		1.06		1.12	
65	255	Cap	4.21	3.88	6.30	5.79	7.25	6.61	8.82	7.83	10.7	9.75	12.4	12.4	13.9	13.9
		kW	0.79		0.87		0.96		1.03		1.11		1.19		1.27	
	292	Cap	4.32	3.98	6.48	5.96	7.44	6.78	9.03	8.02	11.0	9.99	12.5	12.5	13.8	13.8
		kW	0.79		0.86		0.94		1.00		1.08		1.14		1.20	
	315	Cap	4.40	4.05	6.57	6.03	7.54	6.87	9.15	8.13	11.1	10.1	12.4	12.4	14.0	14.0
		kW	0.79		0.86		0.93		0.99		0.07		1.11		1.18	
70	255	Cap	3.89	3.58	5.84	5.36	6.89	6.28	8.69	7.72	10.5	9.57	12.1	12.1	14.0	14.0
		kW	0.82		0.89		0.99		1.08		1.17		1.25		1.35	
	292	Cap	3.98	3.66	6.08	5.59	7.08	6.46	8.91	7.91	10.8	9.81	12.4	12.4	14.0	14.0
		kW	0.82		0.89		0.97		1.05		1.13		1.20		1.27	
	315	Cap	4.03	3.71	6.17	5.67	7.19	6.55^	9.03	8.02	10.9	9.94	12.5	12.5^	14.1	14.1
		kW	0.82		0.89		0.97		1.04		1.11		1.18		1.25	
75	255	Cap	3.54	3.26	5.39	4.95	6.44	5.87	8.31	7.38	10.2	9.32	12.0	12.0	14.0	14.0
		kW	0.86		0.93		1.03		1.12		1.22		1.31		1.43	
	292	Cap	3.61	3.32	5.55	5.10	6.77	6.17	8.61	7.65	10.4	9.64	12.3	12.3	14.0	14.0
		kW	0.85		0.92		1.01		1.10		1.18		1.26		1.34	
	315	Cap	3.65	3.36	5.64	5.18	6.91	6.30	8.77	7.79	10.8	9.81	12.4	12.4	14.0	14.0
		kW	0.85		0.92		1.01		1.08		1.17		1.24		1.32	
80	255	Cap	3.20	2.95	4.90	4.51	7.01	6.39	8.06	7.16	10.1	9.16	11.7	11.7	13.9	13.9
		kW	0.89		0.96		1.06		1.17		1.28		1.37		1.50	
	292	Cap	3.27	3.01	5.08	4.67	7.29	6.65	8.37	7.43	10.3	9.41	12.1	12.1	14.1	14.1
		kW	0.89		0.95		1.04		1.14		1.24		1.32		1.43	
	315	Cap	3.31	3.03	5.14	4.73	7.37	6.72	8.46	7.51	10.5	9.54	12.2	12.2	14.0	14.0
		kW	0.89		0.95		1.04		1.13		1.22		1.30		1.39	

Indicates rating condition.

Indicates integrated rating.

LEGEND

Cap – Heating Capacity (1000 Btuh) (includes indoor-fan motor heat)
kW – Total Power Input (includes compressor motor power input, outdoor-fan motor power input, and indoor-fan motor power input)

*Click here to view Systems Index Table.
^ Integrated Rating.

NOTE: Integrated capacity is maximum (instantaneous) capacity less the effect of frost on the outdoor coil and the heat required to defrost it.

INSTANTANEOUS AND INTEGRATED HEATING RATINGS (cont)

SYSTEM 17H* — HIGH WALL SYSTEM (538DNX018 WITH 619ENX018)

TEMP (F) AIR ENTERING INDOOR UNIT	AIR ENTERING INDOOR UNIT (CFM)		AIR TEMPERATURE ENTERING OUTDOOR COIL (F)													
			3		7		17		27		37		47		57	
55	420	Cap	6.62	6.09	8.84	8.12	10.9	9.95	12.9	11.5	15.4	14.0	17.7	17.7	20.5	20.5
		kW	1.02		1.12		1.23		1.35		1.50		1.63		1.80	
	450	Cap	6.70	6.16	8.93	8.21	11.0	10.0	13.0	11.6	15.5	14.1	17.9	17.9	20.6	20.6
		kW	1.02		1.12		1.23		1.35		1.49		1.62		1.77	
	510	Cap	6.84	6.30	9.11	8.37	11.2	10.2	13.3	11.8	15.8	14.4	18.2	18.2	20.7	20.7
		kW	1.02		1.12		1.23		1.34		1.47		1.59		1.73	
60	420	Cap	6.19	5.69	8.29	7.62	10.6	9.65	12.6	11.1	15.0	13.6	17.3	17.3	19.9	19.9
		kW	1.03		1.14		1.25		1.37		1.52		1.67		1.83	
	420	Cap	6.27	5.77	8.40	7.72	10.7	9.74	12.7	11.3	15.1	13.8	17.5	17.5	20.1	20.1
		kW	1.03		1.14		1.25		1.37		1.52		1.65		1.81	
	510	Cap	6.41	5.90	8.65	7.95	10.9	9.91	12.9	11.5	15.4	14.0	17.8	17.8	20.6	20.6
		kW	1.03		1.14		1.25		1.36		1.50		1.63		1.79	
65	420	Cap	5.75	5.29	7.84	7.20	10.2	9.30	12.2	10.8	14.6	13.2	16.8	16.8	19.7	19.7
		kW	1.04		1.15		1.27		1.40		1.55		1.70		1.88	
	450	Cap	5.83	5.36	7.94	7.30	10.3	9.40	12.3	10.9	14.7	13.4	17.0	17.0	19.8	19.8
		kW	1.04		1.15		1.27		1.39		1.54		1.69		1.86	
	510	Cap	5.96	5.49	8.12	7.46	10.5	9.58	12.5	11.1	15.0	13.6	17.4	17.4	20.1	20.1
		kW	1.05		1.15		1.27		1.39		1.53		1.67		1.83	
70	420	Cap	5.30	4.88	7.37	6.77	9.63	8.78	11.8	10.5	14.1	12.9	16.4	16.4	19.2	19.2
		kW	1.05		1.17		1.29		1.42		1.58		1.73		1.92	
	450	Cap	5.38	4.95	7.46	6.85	9.80	8.94	12.0	10.6	14.3	13.0	16.6	16.6	19.3	19.3
		kW	1.05		1.17		1.29		1.41		1.57		1.72		1.90	
	510	Cap	5.52	5.08	7.66	7.04	10.1	9.17^	12.2	10.8	14.6	13.3	16.9	16.9^	19.8	19.8
		kW	1.06		1.17		1.28		1.41		1.56		1.70		1.87	
75	420	Cap	4.86	4.47	6.89	6.33	9.09	8.29	11.4	10.2	13.7	12.5	16.0	16.0	18.7	18.7
		kW	1.06		1.18		1.30		1.44		1.60		1.76		1.96	
	450	Cap	4.93	4.53	6.98	6.42	9.22	8.41	11.6	10.3	13.9	12.6	16.2	16.2	19.0	19.0
		kW	1.06		1.18		1.30		1.43		1.59		1.75		1.94	
	510	Cap	5.06	4.65	7.16	6.58	9.50	8.66	11.8	10.5	14.2	12.9	16.5	16.5	19.3	19.3
		kW	1.07		1.18		1.30		1.43		1.59		1.74		1.91	
80	420	Cap	5.31	4.89	6.42	5.90	8.58	7.82	11.0	9.79	13.3	12.1	15.6	15.6	18.2	18.2
		kW	1.07		1.19		1.32		1.46		1.62		1.79		1.99	
	450	Cap	5.38	4.95	6.50	5.97	8.71	7.94	11.2	9.93	13.3	12.3	15.8	15.8	18.5	18.5
		kW	1.07		1.19		1.32		1.45		1.61		1.78		1.98	
	510	Cap	5.50	5.06	6.67	6.13	8.94	8.15	11.4	10.1	13.7	12.5	16.1	16.1	18.9	18.9
		kW	1.08		1.19		1.32		1.45		1.61		1.77		1.96	

Indicates rating condition.

Indicates integrated rating.

LEGEND

Cap – Heating Capacity (1000 Btuh) (includes indoor-fan motor heat)
kW – Total Power Input (includes compressor motor power input, outdoor-fan motor power input, and indoor-fan motor power input)

*Click here to view Systems Index Table.
^ Integrated Rating.

NOTE: Integrated capacity is maximum (instantaneous) capacity less the effect of frost on the outdoor coil and the heat required to defrost it.

INSTANTANEOUS AND INTEGRATED HEATING RATINGS (cont)

SYSTEM 18H* — HIGH WALL SYSTEM (538DNX024 WITH 619ENX024)

TEMP (F) AIR ENTERING INDOOR UNIT	AIR ENTERING INDOOR UNIT (CFM)		AIR TEMPERATURE ENTERING OUTDOOR COIL (F)													
			3		7		17		27		37		47		57	
55	465	Cap	8.43	7.75	11.1	10.2	13.8	12.6	16.4	14.6	19.6	17.8	22.5	22.5	26.2	26.2
		kW	1.28		1.41		1.55		1.69		1.88		2.06		2.28	
	500	Cap	8.56	7.87	11.3	10.4	14.0	12.8	16.6	14.8	19.8	18.0	22.8	22.8	26.3	26.3
		kW	1.28		1.41		1.55		1.69		1.87		2.04		2.24	
	545	Cap	8.67	7.98	11.4	10.5	14.2	12.9	16.8	15.0	20.1	18.3	23.1	23.1	26.4	26.4
		kW	1.28		1.41		1.54		1.68		1.86		2.03		2.19	
60	465	Cap	7.89	7.25	10.6	9.70	13.3	12.1	16.0	14.2	19.1	17.3	21.9	21.9	25.6	25.6
		kW	1.29		1.43		1.57		1.72		1.91		2.10		2.32	
	500	Cap	8.00	7.36	10.7	9.86	13.5	12.3	16.2	14.4	19.3	17.6	22.2	22.2	25.9	25.9
		kW	1.29		1.42		1.57		1.72		1.90		2.08		2.30	
	545	Cap	8.14	7.49	10.9	10.0	13.7	12.4	16.4	14.5	19.6	17.8	22.5	22.5	26.3	26.3
		kW	1.30		1.42		1.57		1.71		1.89		2.06		2.28	
65	465	Cap	7.36	6.77	9.99	9.18	12.8	11.7	15.5	13.8	18.5	16.9	21.4	21.4	25.1	25.1
		kW	1.31		1.44		1.59		1.75		1.94		2.13		2.38	
	500	Cap	7.46	6.86	10.1	9.32	13.0	11.9	15.7	14.0	18.8	17.1	21.6	21.6	25.4	25.4
		kW	1.31		1.44		1.59		1.74		1.93		2.12		2.35	
	545	Cap	7.60	6.99	10.3	9.48	13.2	12.0	15.9	14.1	19.0	17.3	22.0	22.0	25.7	25.7
		kW	1.31		1.44		1.59		1.74		1.92		2.10		2.32	
70	465	Cap	6.80	6.26	9.41	8.65	12.3	11.2	15.0	13.3	18.0	16.4	20.8	20.8	24.5	24.5
		kW	1.32		1.46		1.61		1.77		1.97		2.17		2.43	
	500	Cap	6.92	6.37	9.56	8.79	12.5	11.4	15.2	13.5	18.3	16.6	21.1	21.1	24.9	24.9
		kW	1.32		1.46		1.61		1.77		1.96		2.15		2.41	
	545	Cap	7.03	6.47	9.74	8.95	12.7	11.5^	15.5	13.7	18.5	16.9	21.4	21.4^	25.3	25.3
		kW	1.32		1.46		1.61		1.76		1.96		2.14		2.39	
75	465	Cap	6.22	5.72	8.85	8.13	11.7	10.6	14.5	12.9	17.6	16.0	20.3	20.3	23.8	23.8
		kW	1.33		1.48		1.63		1.80		2.00		2.20		2.47	
	500	Cap	6.33	5.82	8.99	8.26	11.8	10.8	14.7	13.1	17.8	16.2	20.6	20.6	24.3	24.3
		kW	1.33		1.48		1.63		1.79		1.99		2.19		2.45	
	545	Cap	6.45	5.94	9.17	8.42	12.1	11.0	15.0	13.3	18.0	16.4	20.9	20.9	24.6	24.6
		kW	1.34		1.48		1.63		1.79		1.99		2.18		2.43	
80	465	Cap	5.60	5.15	8.28	7.61	11.1	10.1	13.9	12.3	17.1	15.5	19.8	19.8	23.2	23.2
		kW	1.35		1.49		1.65		1.82		2.03		2.24		2.50	
	500	Cap	5.70	5.25	8.40	7.72	11.2	10.2	14.1	12.5	17.3	15.7	20.1	20.1	23.5	23.5
		kW	1.35		1.49		1.65		1.82		2.02		2.23		2.49	
	545	Cap	5.82	5.36	8.57	7.87	11.4	10.4	14.4	12.8	17.5	15.9	20.3	20.3	23.9	23.9
		kW	1.35		1.49		1.65		1.81		2.01		2.21		2.47	

Indicates rating condition.

Indicates integrated rating.

LEGEND

Cap – Heating Capacity (1000 Btuh) (includes indoor-fan motor heat)
kW – Total Power Input (includes compressor motor power input, outdoor-fan motor power input, and indoor-fan motor power input)

*Click here to view Systems Index Table.
^ Integrated Rating.

NOTE: Integrated capacity is maximum (instantaneous) capacity less the effect of frost on the outdoor coil and the heat required to defrost it.

INSTANTANEOUS AND INTEGRATED HEATING RATINGS (cont)

SYSTEM 19H* — CEILING-SUSPENDED SYSTEM (538BNX018 WITH 619CNX024)

TEMP (F) AIR ENTERING INDOOR UNIT	AIR ENTERING INDOOR UNIT (CFM)		AIR TEMPERATURE ENTERING OUTDOOR COIL (F)															
			0		10		17		20		30		40		47		60	
55	320	Cap	6.84	6.30	8.86	8.10	10.30	9.36	10.90	9.84	13.00	11.40	15.30	15.30	16.90	16.90	22.50	22.50
		kW	1.18		1.25		1.30		1.32		1.38		1.46		1.51		1.69	
	400	Cap	7.23	6.65	9.34	8.54	10.80	9.86	11.50	10.30	13.60	12.00	15.90	15.90	17.70	17.70	24.20	24.20
		kW	1.20		1.26		1.30		1.32		1.37		1.43		1.48		1.58	
	480	Cap	7.52	6.92	9.69	8.86	11.20	10.20	11.90	10.70	14.00	12.30	16.40	16.40	18.40	18.40	23.90	23.90
		kW	1.22		1.27		1.31		1.32		1.37		1.42		1.45		1.54	
60	320	Cap	6.38	5.87	8.39	7.67	9.80	8.93	10.40	9.41	12.60	11.00	14.90	14.90	16.50	16.50	22.10	22.10
		kW	1.19		1.26		1.31		1.33		1.40		1.48		1.54		1.73	
	400	Cap	6.76	6.22	8.87	8.11	10.30	9.43	11.00	9.92	13.20	11.60	15.50	15.50	17.30	17.30	23.50	23.50
		kW	1.21		1.27		1.32		1.34		1.40		1.46		1.51		1.64	
	480	Cap	7.04	6.48	9.22	8.43	10.70	9.79	11.40	10.30	13.60	11.90	16.00	16.00	17.90	17.90	23.60	23.60
		kW	1.23		1.29		1.33		1.34		1.40		1.45		1.49		1.59	
65	320	Cap	5.91	5.44	7.92	7.24	9.32	8.50	9.97	8.99	12.10	10.60	14.40	14.40	16.10	16.10	21.60	21.60
		kW	1.20		1.28		1.33		1.35		1.43		1.51		1.57		1.76	
	400	Cap	6.28	5.78	8.39	7.67	9.87	9.00	10.50	9.51	12.80	11.20	15.10	15.10	16.80	16.80	22.90	22.90
		kW	1.22		1.29		1.34		1.36		1.42		1.49		1.54		1.69	
	480	Cap	6.56	6.04	8.74	7.99	10.30	9.36	11.00	9.88	13.20	11.60	15.60	15.60	17.50	17.50	23.30	23.30
		kW	1.24		1.30		1.35		1.36		1.42		1.48		1.52		1.64	
70	320	Cap	5.45	5.01	7.45	6.81	8.85	8.07	9.50	8.57	11.70	10.20	14.00	14.00	15.70	15.70	21.20	21.20
		kW	1.21		1.29		1.34		1.37		1.45		1.53		1.59		1.80	
	400	Cap	5.81	5.34	7.92	7.24	9.40	8.57	10.10	9.09	12.30	10.80	14.70	14.70	16.40	16.40	22.20	22.20
		kW	1.23		1.30		1.35		1.38		1.44		1.52		1.57		1.74	
	480	Cap	6.08	5.60	8.27	7.56	9.80	8.93^	10.50	9.46	12.80	11.20	15.20	15.20	17.00	17.00^	23.00	23.00
		kW	1.26		1.32		1.37		1.39		1.45		1.51		1.56		1.69	
75	320	Cap	4.96	4.56	6.96	6.36	8.36	7.62	9.01	8.12	11.20	9.79	13.50	13.50	15.20	15.20	20.80	20.80
		kW	1.22		1.30		1.36		1.38		1.47		1.55		1.62		1.83	
	400	Cap	5.30	4.88	7.41	6.78	8.89	8.11	9.58	8.63	11.90	10.40	14.30	14.30	16.00	16.00	21.60	21.60
		kW	1.25		1.32		1.37		1.39		1.47		1.54		1.60		1.79	
	480	Cap	5.56	5.12	7.76	7.09	9.29	8.47	10.00	9.02	12.30	10.80	14.80	14.80	16.50	16.50	22.60	22.60
		kW	1.27		1.34		1.38		1.40		1.47		1.54		1.59		1.75	
80	320	Cap	4.46	4.11	6.46	5.91	7.86	7.17	8.51	7.67	10.70	9.36	13.00	13.00	14.70	14.70	20.40	20.40
		kW	1.23		1.32		1.37		1.40		1.49		1.58		1.64		1.86	
	400	Cap	4.79	4.41	6.91	6.31	8.39	7.65	9.08	8.18	11.40	9.96	13.80	13.80	15.60	15.60	21.00	21.00
		kW	1.26		1.33		1.39		1.41		1.49		1.57		1.63		1.84	
	480	Cap	5.05	4.64	7.25	6.63	8.79	8.01	9.50	8.57	11.90	10.40	14.40	14.40	16.10	16.10	22.20	22.20
		kW	1.28		1.35		1.40		1.42		1.49		1.57		1.62		1.81	

Indicates rating condition.

Indicates integrated rating.

LEGEND

Cap – Heating Capacity (1000 Btuh) (includes indoor-fan motor heat)
kW – Total Power Input (includes compressor motor power input, outdoor-fan motor power input, and indoor-fan motor power input)

*Click here to view Systems Index Table.
^ Integrated Rating.

NOTE: Integrated capacity is maximum (instantaneous) capacity less the effect of frost on the outdoor coil and the heat required to defrost it.

INSTANTANEOUS AND INTEGRATED HEATING RATINGS (cont)

SYSTEM 20H* — CEILING-SUSPENDED SYSTEM (538BNX024 WITH 619CNX024)

TEMP (F) AIR ENTERING INDOOR UNIT	AIR ENTERING INDOOR UNIT (CFM)		AIR TEMPERATURE ENTERING OUTDOOR COIL (F)															
			0		10		17		20		30		40		47		60	
55	400	Cap	8.71	8.01	11.20	10.30	13.00	11.90	13.90	12.50	16.70	14.70	20.10	20.10	22.80	22.80	27.50	27.50
		kW	1.56		1.67		1.75		1.79		1.90		2.03		2.14		2.31	
	480	Cap	9.01	8.29	11.60	10.60	13.40	12.20	14.30	12.90	17.30	15.20	20.80	20.80	23.90	23.90	28.30	28.30
		kW	1.57		1.68		1.75		1.79		1.89		2.01		2.11		2.22	
	550	Cap	9.23	8.49	11.90	10.80	13.70	12.50	14.60	13.20	17.70	15.50	21.30	21.30	24.40	24.40	28.70	28.70
		kW	1.59		1.69		1.76		1.79		1.89		2.00		2.08		2.19	
60	400	Cap	8.29	7.63	10.80	9.91	12.60	11.50	13.50	12.20	16.30	14.30	19.70	19.70	22.30	22.30	27.00	27.00
		kW	1.57		1.69		1.77		1.81		1.93		2.06		2.17		2.36	
	480	Cap	8.59	7.90	11.20	10.20	13.00	11.90	13.90	12.50	16.80	14.80	20.30	20.30	23.20	23.20	27.80	27.80
		kW	1.59		1.70		1.78		1.81		1.92		2.05		2.14		2.28	
	550	Cap	8.80	8.10	11.40	10.50	13.30	12.10	14.20	12.80	17.20	15.10	20.80	20.80	23.80	23.80	28.30	28.30
		kW	1.60		1.71		1.78		1.81		1.92		2.04		2.12		2.25	
65	400	Cap	7.87	7.25	10.40	9.54	12.20	11.20	13.10	11.80	15.90	13.90	19.20	19.20	21.70	21.70	26.50	26.50
		kW	1.59		1.71		1.79		1.83		1.96		2.10		2.21		2.40	
	480	Cap	8.17	7.52	10.80	9.87	12.60	11.50	13.50	12.20	16.40	14.40	19.80	19.80	22.60	22.60	27.40	27.40
		kW	1.60		1.72		1.80		1.83		1.95		2.08		2.18		2.34	
	550	Cap	8.38	7.71	11.00	10.10	12.90	11.80	13.80	12.40	16.80	14.70	20.30	20.30	23.20	23.20	27.90	27.90
		kW	1.62		1.73		1.81		1.84		1.95		2.07		2.17		2.30	
70	400	Cap	7.46	6.86	10.00	9.17	11.80	10.80	12.70	11.40	15.40	13.50	18.70	18.70	21.20	21.20	26.00	26.00
		kW	1.60		1.73		1.82		1.85		1.98		2.13		2.24		2.45	
	480	Cap	7.75	7.13	10.40	9.50	12.20	11.20	13.10	11.80	15.90	14.00	19.30	19.30	21.90	21.90	26.90	26.90
		kW	1.62		1.74		1.82		1.86		1.98		2.11		2.22		2.41	
	550	Cap	7.96	7.32	10.60	9.72	12.50	11.40^	13.40	12.10	16.30	14.30	19.80	19.80	22.60	22.60^	27.60	27.60
		kW	1.63		1.75		1.83		1.87		1.98		2.11		2.21		2.36	
75	400	Cap	7.02	6.46	9.60	8.77	11.40	10.40	12.20	11.00	15.00	13.20	18.20	18.20	20.60	20.60	25.40	25.40
		kW	1.62		1.74		1.83		1.88		2.01		2.16		2.27		2.49	
	480	Cap	7.31	6.73	9.96	9.11	11.80	10.80	12.70	11.40	15.50	13.60	18.80	18.80	21.40	21.40	26.40	26.40
		kW	1.63		1.76		1.84		1.88		2.01		2.15		2.25		2.45	
	550	Cap	7.52	6.92	10.20	9.34	12.10	11.00	13.00	11.70	15.90	13.90	19.30	19.30	22.00	22.00	27.20	27.20
		kW	1.65		1.77		1.85		1.89		2.01		2.14		2.24		2.42	
80	400	Cap	6.59	6.06	9.16	8.38	11.00	10.00	11.80	10.60	14.60	12.80	17.70	17.70	20.10	20.10	24.80	24.80
		kW	1.63		1.76		1.85		1.90		2.01		2.19		2.31		2.53	
	480	Cap	6.87	6.32	9.53	8.71	11.40	10.40	12.20	11.00	15.10	13.20	18.30	18.30	20.80	20.80	25.80	25.80
		kW	1.65		1.77		1.86		1.90		2.04		2.18		2.29		2.50	
	550	Cap	7.08	6.51	9.79	8.95	11.70	10.70	12.50	11.30	15.40	13.50	18.80	18.80	21.40	21.40	26.80	26.80
		kW	1.67		1.79		1.87		1.91		2.04		2.18		2.28		2.48	

Indicates rating condition.

Indicates integrated rating.

LEGEND

Cap – Heating Capacity (1000 Btuh) (includes indoor-fan motor heat)
kW – Total Power Input (includes compressor motor power input, outdoor-fan motor power input, and indoor-fan motor power input)

*Click here to view Systems Index Table.
^ Integrated Rating.

NOTE: Integrated capacity is maximum (instantaneous) capacity less the effect of frost on the outdoor coil and the heat required to defrost it.

INSTANTANEOUS AND INTEGRATED HEATING RATINGS (cont)

SYSTEM 21H* — CEILING-SUSPENDED SYSTEM (538BNX030 WITH 619CNX036)

TEMP (F) AIR ENTERING INDOOR UNIT	AIR ENTERING INDOOR UNIT (CFM)		AIR TEMPERATURE ENTERING OUTDOOR COIL (F)															
			0		10		17		20		30		40		47		60	
55	630	Cap	10.60	9.73	13.50	12.40	15.70	14.30	16.70	15.10	20.20	17.70	24.90	23.80	28.30	28.20	34.10	34.10
		kW	1.69		1.79		1.87		1.90		2.02		2.18		2.29		2.48	
	750	Cap	10.70	9.89	13.70	12.60	15.90	14.50	16.80	15.30	20.50	17.90	25.20	24.20	28.60	28.60	34.60	34.60
		kW	1.68		1.78		1.84		1.87		1.98		2.12		2.21		2.38	
	870	Cap	10.90	10.00	13.80	12.70	16.00	14.60	17.00	15.40	20.70	18.10	25.50	24.50	29.00	29.00	35.00	35.00
		kW	1.68		1.77		1.83		1.86		1.95		2.08		2.16		2.31	
60	630	Cap	10.40	9.54	13.30	12.20	15.50	14.20	16.50	15.00	20.00	17.60	24.70	23.60	27.90	27.90	33.70	33.70
		kW	1.77		1.88		1.96		2.00		2.13		2.29		2.41		2.61	
	750	Cap	10.50	9.70	13.50	12.40	15.70	14.30	16.70	15.20	20.30	17.80	25.00	24.00	28.30	28.30	34.20	34.20
		kW	1.76		1.86		1.93		1.97		2.08		2.22		2.32		2.50	
	870	Cap	10.70	9.82	13.60	12.50	15.90	14.50	16.90	15.30	20.50	17.90	25.30	24.30	28.60	28.60	34.60	34.60
		kW	1.76		1.85		1.92		1.95		2.05		2.18		2.27		2.43	
65	630	Cap	10.20	9.36	13.10	12.10	15.40	14.00	16.40	14.90	19.90	17.40	24.40	23.40	27.60	27.60	33.40	33.40
		kW	1.85		1.97		2.06		2.10		2.23		2.40		2.52		2.74	
	750	Cap	10.30	9.51	13.30	12.20	15.60	14.20	16.60	15.00	20.10	17.60	24.80	23.70	28.00	28.00	33.90	33.90
		kW	1.84		1.94		2.02		2.06		2.18		2.33		2.43		2.62	
	870	Cap	10.50	9.64	13.50	12.40	15.70	14.30	16.70	15.20	20.30	17.80	25.00	24.00	28.30	28.30	34.20	34.20
		kW	1.84		1.93		2.01		2.04		2.15		2.28		2.38		2.55	
70	630	Cap	9.97	9.17	12.90	11.90	15.30	13.90	16.30	14.70	19.70	17.30	24.20	23.20	27.30	27.30	33.00	33.00
		kW	1.93		2.05		2.15		2.19		2.34		2.52		2.64		2.87	
	750	Cap	10.10	9.32	13.10	12.10	15.50	14.10	16.40	14.90	19.90	17.50	24.50	23.50	27.70	27.70	33.50	33.50
		kW	1.92		2.03		2.12		2.15		2.28		2.44		2.55		2.74	
	870	Cap	10.30	9.45	13.30	12.20	15.60	14.20^	16.60	15.00	20.10	17.60	24.80	23.70	28.00	28.00^	33.90	33.90
		kW	1.91		2.02		2.10		2.13		2.24		2.39		2.49		2.67	
75	630	Cap	9.74	8.96	12.70	11.70	15.10	13.70	16.10	14.60	19.60	17.20	24.00	23.00	27.10	27.10	32.70	32.70
		kW	2.01		2.15		2.25		2.29		2.45		2.64		2.77		3.01	
	750	Cap	9.91	9.12	12.90	11.90	15.30	13.90	16.30	14.80	19.80	17.40	24.30	23.30	27.40	27.40	33.20	33.20
		kW	2.00		2.12		2.21		2.25		2.39		2.55		2.67		2.88	
	870	Cap	10.10	9.26	13.10	12.00	15.40	14.10	16.40	14.90	20.00	17.50	24.50	23.50	27.70	27.70	33.60	33.60
		kW	2.00		2.11		2.19		2.23		2.35		2.50		2.61		2.79	
80	630	Cap	9.50	8.74	12.50	11.50	14.90	13.60	15.90	14.40	19.50	17.10	23.90	22.90	26.90	26.90	32.40	32.40
		kW	2.10		2.24		2.35		2.40		2.56		2.76		2.90		3.15	
	750	Cap	9.69	8.91	12.70	11.70	15.10	13.70	16.10	14.60	19.70	17.20	24.10	23.10	27.20	27.20	32.90	32.90
		kW	2.09		2.21		2.31		2.35		2.50		2.67		2.79		3.01	
	870	Cap	9.84	9.06	12.90	11.80	15.30	13.90	16.30	14.80	19.80	17.40	24.30	23.30	27.40	27.40	33.20	33.20
		kW	2.08		2.20		2.29		2.33		2.46		2.61		2.72		2.92	

Indicates rating condition.

Indicates integrated rating.

LEGEND

Cap – Heating Capacity (1000 Btuh) (includes indoor-fan motor heat)
kW – Total Power Input (includes compressor motor power input, outdoor-fan motor power input, and indoor-fan motor power input)

*Click here to view Systems Index Table.
^ Integrated Rating.

NOTE: Integrated capacity is maximum (instantaneous) capacity less the effect of frost on the outdoor coil and the heat required to defrost it.

INSTANTANEOUS AND INTEGRATED HEATING RATINGS (cont)

SYSTEM 22H* — CEILING-SUSPENDED SYSTEM (538BNX036 SINGLE-PHASE UNIT WITH 619CNX036)

TEMP (F) AIR ENTERING INDOOR UNIT	AIR ENTERING INDOOR UNIT (CFM)		AIR TEMPERATURE ENTERING OUTDOOR COIL (F)															
			0		10		17		20		30		40		47		60	
55	630	Cap	13.40	12.40	16.80	15.30	19.10	17.40	20.30	18.30	24.30	21.30	29.10	29.10	33.30	33.30	39.50	39.50
		kW	2.10		2.21		2.29		2.33		2.46		2.62		2.76		2.92	
	750	Cap	13.60	12.50	16.90	15.50	19.30	17.60	20.50	18.50	24.60	21.50	29.50	29.50	33.40	33.40	38.60	38.60
		kW	2.07		2.16		2.23		2.26		2.37		2.51		2.60		2.68	
	870	Cap	13.80	12.70	17.10	15.60	19.40	17.70	20.60	18.60	24.80	21.70	29.60	29.60	33.20	33.20	39.60	39.60
		kW	2.05		2.13		2.19		2.22		2.32		2.42		2.49		2.62	
60	630	Cap	13.20	12.10	16.60	15.20	18.90	17.30	20.10	18.20	24.10	21.10	28.90	28.90	33.00	33.00	39.20	39.20
		kW	2.19		2.32		2.41		2.45		2.59		2.76		2.91		3.09	
	750	Cap	13.40	12.30	16.80	15.30	19.10	17.40	20.30	18.30	24.40	21.40	29.20	29.20	33.20	33.20	38.70	38.70
		kW	2.16		2.27		2.34		2.38		2.50		2.64		2.75		2.86	
	870	Cap	13.50	12.50	16.90	15.50	19.30	17.60	20.50	18.50	24.60	21.50	29.40	29.40	33.10	33.10	39.50	39.50
		kW	2.15		2.24		2.31		2.34		2.44		2.55		2.64		2.78	
65	630	Cap	12.90	11.90	16.40	15.00	18.80	17.10	20.00	18.00	23.90	21.00	28.60	28.60	32.70	32.70	38.90	38.90
		kW	2.28		2.42		2.52		2.57		2.72		2.89		3.05		3.27	
	750	Cap	13.20	12.10	16.60	15.20	19.00	17.30	20.20	18.20	24.20	21.20	29.00	29.00	33.00	33.00	38.90	38.90
		kW	2.25		2.37		2.46		2.50		2.62		2.77		2.90		3.04	
	870	Cap	13.30	12.30	16.70	15.30	19.10	17.40	20.30	18.40	24.40	21.40	29.20	29.20	33.10	33.10	39.40	39.40
		kW	2.24		2.34		2.42		2.45		2.56		2.69		2.78		2.93	
70	630	Cap	12.70	11.70	16.20	14.80	18.60	17.00	19.80	17.90	23.70	20.80	28.40	28.40	32.40	32.40	38.70	38.70
		kW	2.37		2.53		2.63		2.68		2.84		3.03		3.20		3.44	
	750	Cap	12.90	11.90	16.40	15.00	18.80	17.20	20.00	18.10	24.00	21.00	28.70	28.70	32.80	32.80	39.10	39.10
		kW	2.35		2.48		2.57		2.61		2.75		2.91		3.05		3.22	
	870	Cap	13.10	12.10	16.60	15.20	19.00	17.30^	20.20	18.20	24.20	21.20	29.00	29.00	33.00	33.00^	39.30	39.30
		kW	2.33		2.45		2.53		2.57		2.69		2.82		2.93		3.09	
75	630	Cap	12.40	11.40	15.90	14.50	18.40	16.80	19.60	17.70	23.60	20.60	28.20	28.20	32.10	32.10	38.40	38.40
		kW	2.46		2.63		2.74		2.80		2.98		3.18		3.35		3.60	
	750	Cap	12.60	11.60	16.20	14.80	18.60	17.00	19.80	17.90	23.80	20.90	28.50	28.50	32.50	32.50	38.90	38.90
		kW	2.44		2.58		2.69		2.73		2.88		3.05		3.19		3.41	
	870	Cap	12.80	11.80	16.40	15.00	18.80	17.20	20.00	18.10	24.00	21.10	28.80	28.80	32.80	32.80	39.00	39.00
		kW	2.43		2.56		2.65		2.69		2.81		2.96		3.08		3.25	
80	630	Cap	12.10	11.10	15.60	14.30	18.10	16.50	19.30	17.40	23.40	20.50	27.90	27.90	31.80	31.80	38.10	38.10
		kW	2.55		2.73		2.85		2.91		3.11		3.32		3.50		3.77	
	750	Cap	12.30	11.40	15.90	14.60	18.50	16.80	19.70	17.70	23.60	20.70	28.20	28.20	32.20	32.20	38.70	38.70
		kW	2.53		2.69		2.80		2.85		3.01		3.18		3.34		3.59	
	870	Cap	12.50	11.50	16.20	14.80	18.70	17.00	19.90	17.90	23.90	20.90	28.50	28.50	32.70	32.70	38.80	38.80
		kW	2.52		2.66		2.76		2.80		2.94		3.10		3.24		3.41	

Indicates rating condition.

Indicates integrated rating.

LEGEND

Cap – Heating Capacity (1000 Btuh) (includes indoor-fan motor heat)
kW – Total Power Input (includes compressor motor power input, outdoor-fan motor power input, and indoor-fan motor power input)

*Click here to view Systems Index Table.
^ Integrated Rating.

NOTE: Integrated capacity is maximum (instantaneous) capacity less the effect of frost on the outdoor coil and the heat required to defrost it.

INSTANTANEOUS AND INTEGRATED HEATING RATINGS (cont)

SYSTEM 23H* — CEILING-SUSPENDED SYSTEM (538BPX, BEX036 3-PHASE UNIT WITH 619CNX036)

TEMP (F) AIR ENTERING INDOOR UNIT	AIR ENTERING INDOOR UNIT (CFM)		AIR TEMPERATURE ENTERING OUTDOOR COIL (F)															
			0		10		17		20		30		40		47		60	
55	630	Cap	14.40	13.20	18.00	16.50	20.60	18.80	21.90	19.70	26.20	23.00	31.00	31.00	34.70	34.70	41.80	41.80
		kW	2.51		2.67		2.79		2.84		3.00		3.17		3.29		3.52	
	750	Cap	14.90	13.70	18.60	17.00	21.30	19.40	22.60	20.40	27.10	23.80	32.30	32.30	36.00	36.00	42.10	42.10
		kW	2.52		2.67		2.77		2.82		2.96		3.11		3.21		3.28	
	870	Cap	15.20	14.00	19.10	17.50	21.80	19.90	23.20	20.90	27.90	24.40	33.10	33.10	36.40	36.40	42.50	42.50
		kW	2.54		2.67		2.77		2.81		2.94		3.07		3.11		3.18	
60	630	Cap	13.70	12.60	17.40	15.90	20.00	18.20	21.20	19.20	25.50	22.30	30.20	30.20	33.80	33.80	40.80	40.80
		kW	2.53		2.70		2.82		2.88		3.05		3.22		3.35		3.58	
	750	Cap	14.20	13.00	18.00	16.40	20.60	18.80	21.90	19.80	26.40	23.10	31.40	31.40	35.20	35.20	41.60	41.60
		kW	2.54		2.70		2.81		2.86		3.02		3.17		3.27		3.39	
	870	Cap	14.50	13.40	18.40	16.80	21.10	19.30	22.50	20.30	27.10	23.80	32.30	32.30	35.80	35.80	42.20	42.20
		kW	2.56		2.71		2.81		2.86		2.99		3.13		3.19		3.30	
65	630	Cap	13.00	11.90	16.70	15.30	19.30	17.60	20.60	18.60	24.80	21.70	29.40	29.40	33.00	33.00	39.80	39.80
		kW	2.54		2.73		2.86		2.91		3.09		3.28		3.40		3.64	
	750	Cap	13.50	12.40	17.30	15.80	20.00	18.20	21.30	19.20	25.60	22.50	30.60	30.60	34.30	34.30	41.10	41.10
		kW	2.56		2.73		2.85		2.90		3.07		3.23		3.34		3.51	
	870	Cap	13.80	12.70	17.70	16.20	20.50	18.70	21.80	19.70	26.30	23.10	31.40	31.40	35.10	35.10	42.00	42.00
		kW	2.58		2.74		2.86		2.90		3.05		3.20		3.28		3.43	
70	630	Cap	12.30	11.30	16.10	14.70	18.70	17.00	19.90	18.00	24.00	21.10	28.60	28.60	32.10	32.10	38.80	38.80
		kW	2.56		2.76		2.89		2.95		3.14		3.33		3.46		3.70	
	750	Cap	12.80	11.70	16.60	15.20	19.30	17.60	20.60	18.60	24.90	21.80	29.70	29.70	33.40	33.40	40.50	40.50
		kW	2.59		2.77		2.89		2.95		3.12		3.29		3.41		3.63	
	870	Cap	13.10	12.10	17.10	15.60	19.80	18.10^	21.10	19.10	25.60	22.40	30.60	30.60	34.40	34.40^	41.70	41.70
		kw	2.61		2.78		2.90		2.95		3.10		3.26		3.36		3.55	
75	630	Cap	11.50	10.60	15.40	14.00	18.00	16.40	19.20	17.40	23.30	20.40	27.80	27.80	31.20	31.20	37.80	37.80
		kW	2.58		2.78		2.92		2.98		3.18		3.38		3.51		3.76	
	750	Cap	12.00	11.10	15.90	14.60	18.70	17.00	19.90	18.00	24.20	21.20	28.90	28.90	32.50	32.50	39.50	39.50
		kW	2.60		2.79		2.93		2.98		3.17		3.34		3.46		3.69	
	870	Cap	12.40	11.40	16.40	15.00	19.10	17.50	20.40	18.40	24.80	21.70	29.80	29.80	33.50	33.50	40.80	40.80
		kW	2.63		2.81		2.94		2.99		3.16		3.32		3.43		3.62	
80	630	Cap	10.80	9.94	14.70	13.40	17.40	15.80	18.60	16.70	22.60	19.80	27.00	27.00	30.40	30.40	36.90	36.90
		kW	2.59		2.80		2.95		3.01		3.22		3.43		3.57		3.82	
	750	Cap	11.30	10.40	15.20	13.90	18.00	16.40	19.20	17.40	23.40	20.50	28.10	28.10	31.60	31.60	38.40	38.40
		kW	2.62		2.82		2.96		3.02		3.21		3.40		3.52		3.75	
	870	Cap	11.60	10.70	15.70	14.30	18.50	16.80	19.80	17.80	24.10	21.10	28.90	28.90	32.60	32.60	39.80	39.80
		kW	2.64		2.84		2.97		3.03		3.21		3.37		3.50		3.69	

Indicates rating condition.

Indicates integrated rating.

LEGEND

Cap – Heating Capacity (1000 Btuh) (includes indoor-fan motor heat)
kW – Total Power Input (includes compressor motor power input, outdoor-fan motor power input, and indoor-fan motor power input)

*Click here to view Systems Index Table.
^ Integrated Rating.

NOTE: Integrated capacity is maximum (instantaneous) capacity less the effect of frost on the outdoor coil and the heat required to defrost it.

INSTANTANEOUS AND INTEGRATED HEATING RATINGS (cont)

SYSTEM 24H* — CEILING-SUSPENDED SYSTEM (538BNX, BPX, BEX048 WITH 619CNX048)

TEMP (F) AIR ENTERING INDOOR UNIT	AIR ENTERING INDOOR UNIT (CFM)		AIR TEMPERATURE ENTERING OUTDOOR COIL (F)															
			0		10		17		20		30		40		47		60	
55	820	Cap	20.60	19.00	25.70	23.50	29.30	26.70	30.80	27.80	35.80	31.40	41.70	41.70	46.40	46.40	53.50	53.50
		kW	3.26		3.44		3.56		3.60		3.75		3.92		4.05		4.14	
	975	Cap	21.30	19.60	26.40	24.20	30.00	27.40	31.60	28.50	36.70	32.20	42.90	42.90	47.30	47.30	54.30	53.40
		kW	3.29		3.45		3.56		3.60		3.72		3.86		3.93		3.93	
	1130	Cap	21.90	20.10	27.00	24.70	30.60	27.90	32.20	29.00	37.50	32.80	43.40	43.40	46.80	46.80	53.50	53.50
		kW	3.33		3.48		3.58		3.61		3.71		3.80		3.80		3.82	
60	820	Cap	19.70	18.10	24.80	22.70	28.40	25.90	29.90	27.00	35.00	30.70	40.90	40.90	45.40	45.40	53.00	53.00
		kW	3.29		3.48		3.61		3.66		3.82		4.00		4.13		4.27	
	975	Cap	20.40	18.70	25.50	23.40	29.20	26.60	30.70	27.70	36.00	31.50	42.10	42.10	46.50	46.50	53.30	53.30
		kW	3.33		3.50		3.62		3.66		3.80		3.95		4.03		4.08	
	1130	Cap	20.90	19.20	26.10	23.90	29.80	27.20	31.40	28.30	36.70	32.10	42.60	42.60	46.40	46.40	53.60	53.60
		kW	3.37		3.53		3.64		3.67		3.79		3.90		3.92		3.99	
65	820	Cap	18.70	17.20	23.90	21.80	27.50	25.10	29.00	26.20	34.20	30.00	40.00	40.00	44.50	44.50	52.40	52.40
		kW	3.33		3.53		3.66		3.72		3.89		4.07		4.21		4.41	
	975	Cap	19.40	17.90	24.70	22.60	28.30	25.80	29.90	27.00	35.20	30.80	41.20	41.20	45.70	45.70	53.10	53.10
		kW	3.37		3.55		3.68		3.72		3.87		4.03		4.13		4.24	
	1130	Cap	20.00	18.40	25.30	23.10	29.00	26.40	30.60	27.60	35.90	31.50	41.90	41.90	45.90	45.90	53.60	53.60
		kW	3.41		3.58		3.70		3.74		3.87		4.00		4.04		4.15	
70	820	Cap	17.80	16.40	23.00	21.00	26.60	24.30	28.20	25.40	33.50	29.30	39.20	39.20	43.50	43.50	51.80	51.80
		kW	3.36		3.57		3.72		3.77		3.96		4.15		4.29		4.54	
	975	Cap	18.50	17.00	23.80	21.80	27.50	25.10	29.10	26.30	34.40	30.20	40.30	40.30	44.80	44.80	53.00	53.00
		kW	3.41		3.60		3.73		3.78		3.95		4.12		4.24		4.40	
	1130	Cap	19.00	17.50	24.40	22.30	28.20	25.70^	29.80	26.90	35.10	30.80	41.20	41.20	45.50	45.50^	53.70	53.70
		kW	3.45		3.63		3.76		3.80		3.95		4.10		4.17		4.31	
75	820	Cap	16.80	15.40	22.00	20.10	25.60	23.30	27.20	24.50	32.60	28.50	38.30	38.30	42.60	42.60	50.80	50.80
		kW	3.39		3.61		3.76		3.82		4.02		4.23		4.37		4.62	
	975	Cap	17.40	16.00	22.80	20.80	26.50	24.20	28.20	25.40	33.60	29.40	39.50	39.50	43.90	43.90	52.20	52.20
		kW	3.44		3.64		3.78		3.84		4.01		4.19		4.32		4.53	
	1130	Cap	18.00	16.50	23.50	21.50	27.30	24.90	28.90	26.10	34.40	30.10	40.30	40.30	44.80	44.80	52.40	52.40
		kW	3.49		3.68		3.81		3.86		4.02		4.18		4.28		4.38	
80	820	Cap	15.70	14.50	20.90	19.20	24.60	22.40	26.20	23.70	31.70	27.80	37.50	37.50	41.70	41.70	49.70	49.70
		kW	3.42		3.65		3.81		3.97		4.08		4.30		4.45		4.71	
	975	Cap	16.40	15.10	21.80	19.90	25.50	23.30	27.20	24.50	32.80	28.70	38.60	38.60	43.00	43.00	51.50	51.50
		kW	3.47		3.69		3.84		3.89		4.08		4.27		4.41		4.66	
	1130	Cap	16.40	15.10	21.80	19.90	25.50	23.30	27.20	24.50	32.80	28.70	38.60	38.60	43.00	43.00	51.50	51.50
		kW	3.47		3.69		3.84		3.89		4.08		4.27		4.41		4.66	

Indicates rating condition.

Indicates integrated rating.

LEGEND

Cap – Heating Capacity (1000 Btuh) (includes indoor-fan motor heat)
kW – Total Power Input (includes compressor motor power input, outdoor-fan motor power input, and indoor-fan motor power input)

*Click here to view Systems Index Table.
^ Integrated Rating.

NOTE: Integrated capacity is maximum (instantaneous) capacity less the effect of frost on the outdoor coil and the heat required to defrost it.

INSTANTANEOUS AND INTEGRATED HEATING RATINGS (cont)

SYSTEM 25H* — CEILING-SUSPENDED SYSTEM (538BNX, BPX, BEX060 WITH 619CNX060)

TEMP (F) AIR ENTERING INDOOR UNIT	AIR ENTERING INDOOR UNIT (CFM)		AIR TEMPERATURE ENTERING OUTDOOR COIL (F)															
			0		10		17		20		30		40		47		60	
55	1040	Cap	21.70	19.90	28.00	25.60	32.50	29.60	34.70	31.30	42.00	36.80	50.70	50.70	57.70	57.70	69.80	69.80
		kW	3.34		3.70		3.96		4.07		4.45		4.88		5.20		5.72	
	1220	Cap	22.30	20.50	28.70	26.30	33.20	30.30	35.50	32.00	43.00	37.70	51.90	51.90	58.80	58.80	70.30	70.30
		kW	3.38		3.72		3.96		4.07		4.41		4.80		5.08		5.51	
	1600	Cap	23.20	21.30	29.70	27.20	34.30	31.30	36.70	33.10	44.50	39.00	53.00	53.00	58.40	58.40	69.90	69.90
		kW	3.46		3.77		3.99		4.08		4.40		4.68		4.85		5.20	
60	1040	Cap	20.80	19.10	27.20	24.90	31.70	28.90	33.90	30.60	41.10	36.10	49.70	49.70	56.80	56.80	69.80	69.80
		kW	3.36		3.75		4.02		4.13		4.53		4.98		5.34		5.95	
	1220	Cap	21.40	19.70	27.90	25.50	32.50	29.60	34.70	31.30	42.10	36.90	51.00	51.00	57.90	57.90	69.70	69.70
		kW	3.41		3.77		4.02		4.14		4.50		4.92		5.22		5.69	
	1600	Cap	22.40	20.60	29.00	26.50	33.60	30.60	35.90	32.40	43.60	38.20	52.10	52.10	58.50	58.50	69.30	69.30
		kW	3.50		3.83		4.07		4.16		4.50		4.81		5.04		5.38	
65	1040	Cap	19.80	18.20	26.30	24.00	30.80	28.10	33.00	29.80	40.20	35.30	48.70	48.70	55.70	55.70	68.60	68.60
		kW	3.38		3.78		4.06		4.18		4.60		5.07		5.45		6.08	
	1220	Cap	20.40	18.80	27.00	24.70	31.60	28.80	33.80	30.50	41.20	36.10	50.00	50.00	56.90	56.90	69.00	69.00
		kW	3.42		3.81		4.08		4.19		4.59		5.02		5.35		5.85	
	1600	Cap	21.40	19.70	28.10	25.70	32.80	29.90	35.10	31.60	42.70	37.40	51.40	51.40	58.00	58.00	68.80	68.80
		kW	3.52		3.88		4.13		4.23		4.59		4.94		5.19		5.55	
70	1040	Cap	18.80	17.30	25.40	23.20	30.00	27.30	32.10	29.00	39.40	34.50	47.80	47.80	54.50	54.50	67.50	67.50
		kW	3.39		3.91		4.10		4.23		4.68		5.17		5.55		6.22	
	1220	Cap	19.40	17.90	26.10	23.90	30.80	28.10	33.00	29.80	40.30	35.40	49.00	49.00	56.00	56.00	68.20	68.20
		kW	3.44		3.85		4.13		4.25		4.67		5.12		5.48		6.02	
	1600	Cap	20.50	18.80	27.20	24.90	32.00	29.20^	34.30	30.90	41.80	36.60	50.80	50.80	57.50	57.50^	68.30	68.30
		kW	3.54		3.92		4.19		4.30		4.68		5.08		5.35		5.73	
75	1040	Cap	17.70	16.30	24.30	22.20	28.90	26.40	31.10	28.10	38.40	33.70	46.70	46.70	53.30	53.30	66.20	66.20
		kW	3.40		3.83		4.13		4.27		4.73		5.24		5.64		6.35	
	1220	Cap	18.40	16.90	25.10	23.00	29.80	27.20	32.00	28.90	39.40	34.50	48.00	48.00	54.90	54.90	67.40	67.40
		kW	3.45		3.87		4.16		4.29		4.73		5.21		5.59		6.18	
	1600	Cap	19.40	17.80	26.30	24.10	31.20	28.40	33.40	30.10	40.90	35.80	49.80	49.80	56.70	56.70	68.60	68.60
		kW	3.56		3.96		4.24		4.36		4.76		5.19		5.49		5.96	
80	1040	Cap	16.60	15.30	23.20	21.20	27.80	25.30	30.00	27.10	37.40	32.80	45.70	45.70	52.10	52.10	65.10	65.10
		kW	3.41		3.85		4.16		4.30		4.78		5.31		5.72		6.49	
	1220	Cap	17.20	15.80	24.00	21.90	28.70	26.20	31.00	27.90	38.50	33.70	46.90	46.90	53.60	53.60	66.60	66.60
		kW	3.46		3.89		4.19		4.33		4.79		5.30		5.68		6.34	
	1600	Cap	18.20	16.80	25.20	23.10	30.20	27.50	32.40	29.20	40.00	35.00	48.80	48.80	55.60	55.60	66.90	66.90
		kW	3.57		3.98		4.27		4.40		4.83		5.28		5.60		6.06	

Indicates rating condition.

Indicates integrated rating.

LEGEND

Cap – Heating Capacity (1000 Btuh) (includes indoor-fan motor heat)
kW – Total Power Input (includes compressor motor power input, outdoor-fan motor power input, and indoor-fan motor power input)

*Click here to view Systems Index Table.
^ Integrated Rating.

NOTE: Integrated capacity is maximum (instantaneous) capacity less the effect of frost on the outdoor coil and the heat required to defrost it.

INSTANTANEOUS AND INTEGRATED HEATING RATINGS (cont)

SYSTEM 26H* — IN-CEILING CASSETTE SYSTEM (538BNX018 WITH 619FNX024)

TEMP (F) AIR ENTERING INDOOR AIR	AIR ENTERING INDOOR UNIT (CFM)		AIR TEMPERATURE ENTERING OUTDOOR COIL (F)															
			0		10		17		20		30		40		47		60	
55	400	Cap	8.28	7.62	10.30	9.43	11.70	10.70	12.30	11.10	14.30	12.50	16.50	16.50	18.10	18.10	21.10	21.10
		kW	1.46		1.50		1.53		1.54		1.58		1.61		1.63		1.65	
	430	Cap	8.39	7.72	10.40	9.54	11.90	10.80	12.40	11.20	14.40	12.60	16.60	16.60	18.30	18.30	21.70	21.70
		kW	1.46		1.51		1.54		1.54		1.57		1.60		1.61		1.63	
	525	Cap	8.70	8.00	10.70	9.83	12.20	11.10	12.80	11.60	14.90	13.00	17.10	17.10	19.00	19.00	21.70	21.70
		kW	1.48		1.52		1.54		1.55		1.57		1.58		1.59		1.58	
60	400	Cap	7.82	7.20	9.87	9.03	11.30	10.30	11.90	10.70	13.90	12.20	16.10	16.10	17.60	17.60	20.60	20.60
		kW	1.47		1.52		1.55		1.57		1.60		1.64		1.66		1.69	
	430	Cap	7.94	7.30	10.00	9.14	11.40	10.40	12.00	10.90	14.00	12.30	16.20	16.20	17.90	17.90	21.20	21.20
		kW	1.48		1.52		1.56		1.57		1.60		1.63		1.65		1.67	
	525	Cap	8.24	7.58	10.30	9.44	11.80	10.80	12.40	11.20	14.50	12.70	16.70	16.70	18.50	18.50	21.40	21.40
		kW	1.50		1.54		1.57		1.57		1.60		1.62		1.63		1.63	
65	400	Cap	7.37	6.78	9.43	8.62	10.90	9.92	11.50	10.40	13.50	11.80	15.70	15.70	17.20	17.20	20.20	20.20
		kW	1.48		1.54		1.57		1.59		1.63		1.67		1.69		1.73	
	430	Cap	7.48	6.88	9.56	8.75	11.00	10.10	11.60	10.50	13.70	12.00	15.80	15.80	17.40	17.40	20.70	20.70
		kW	1.49		1.54		1.58		1.59		1.63		1.66		1.68		1.71	
	525	Cap	7.78	7.15	9.91	9.06	11.40	10.40	12.00	10.80	14.10	12.30	16.30	16.30	18.10	18.10	21.10	21.10
		kW	1.51		1.56		1.59		1.60		1.63		1.65		1.66		1.68	
70	400	Cap	6.91	6.35	8.99	8.22	10.50	9.53	11.10	9.98	13.10	11.50	15.20	15.20	16.80	16.80	19.80	19.80
		kW	1.50		1.55		1.59		1.61		1.66		1.70		1.72		1.76	
	430	Cap	7.02	6.46	9.13	8.35	10.60	9.67	11.20	10.10	13.30	11.60	15.40	15.40	17.00	17.00	20.20	20.20
		kW	1.50		1.56		1.60		1.61		1.65		1.69		1.71		1.75	
	525	Cap	7.32	6.73	9.48	8.67	11.00	10.00^	11.60	10.50	13.70	12.00	15.90	15.90	17.60	17.60^	20.80	20.80
		kW	1.53		1.58		1.61		1.62		1.66		1.69		1.70		1.72	
75	400	Cap	6.43	5.91	8.51	7.78	9.97	9.09	10.60	9.57	12.70	11.20	14.80	14.80	16.40	16.40	19.20	19.20
		kW	1.51		1.57		1.61		1.63		1.68		1.72		1.75		1.80	
	430	Cap	6.53	6.01	8.65	7.91	10.10	9.24	10.80	9.71	12.90	11.30	15.00	15.00	16.60	16.60	19.50	19.50
		kW	1.52		1.58		1.62		1.63		1.68		1.72		1.74		1.79	
	525	Cap	6.82	6.28	9.01	8.24	10.50	9.61	11.20	10.10	13.30	11.70	15.50	15.50	17.10	17.10	20.30	20.30
		kW	1.54		1.60		1.63		1.64		1.68		1.72		1.73		1.76	
80	400	Cap	5.95	5.47	8.04	7.35	9.50	8.66	10.20	9.16	12.30	10.80	14.40	14.40	15.90	15.90	18.60	18.60
		kW	1.52		1.58		1.63		1.64		1.70		1.75		1.78		1.83	
	430	Cap	6.04	5.56	8.16	7.47	9.65	8.80	10.30	9.30	12.50	10.90	14.60	14.60	16.10	16.10	18.90	18.90
		kW	1.53		1.59		1.63		1.65		1.70		1.75		1.78		1.82	
	525	Cap	6.33	5.83	8.54	7.81	10.10	9.20	10.70	9.69	12.90	11.30	15.10	15.10	16.70	16.70	19.80	19.80
		kW	1.56		1.61		1.65		1.66		1.71		1.75		1.77		1.79	

Indicates rating condition.

Indicates integrated rating.

LEGEND

Cap – Heating Capacity (1000 Btuh) (includes indoor-fan motor heat)
kW – Total Power Input (includes compressor motor power input, outdoor-fan motor power input, and indoor-fan motor power input)

*Click here to view Systems Index Table.
^ Integrated Rating.

NOTE: Integrated capacity is maximum (instantaneous) capacity less the effect of frost on the outdoor coil and the heat required to defrost it.

INSTANTANEOUS AND INTEGRATED HEATING RATINGS (cont)

SYSTEM 27H* — IN-CEILING CASSETTE SYSTEM (538BNX024 WITH 619FNX036)

TEMP (F) AIR ENTERING INDOOR UNIT	AIR ENTERING INDOOR UNIT (CFM)		AIR TEMPERATURE ENTERING OUTDOOR COIL (F)															
			0		10		17		20		30		40		47		60	
55	635	Cap	9.48	8.72	12.50	11.40	14.60	13.30	15.50	14.00	18.50	16.20	21.70	21.70	24.30	24.30	28.30	28.30
		kW	1.45		1.56		1.63		1.67		1.77		1.89		1.99		2.13	
	745	Cap	9.75	8.97	12.80	11.70	14.90	13.60	15.80	14.30	18.90	16.50	22.10	22.10	24.80	24.80	29.60	29.60
		kW	1.46		1.56		1.64		1.67		1.76		1.87		1.96		2.05	
	915	Cap	10.10	9.27	13.20	12.00	15.30	14.00	16.20	14.70	19.20	16.90	22.60	22.60	25.60	25.60	29.70	29.70
		kW	1.48		1.58		1.64		1.67		1.76		1.86		1.93		2.04	
60	635	Cap	8.78	8.08	11.80	10.80	13.90	12.70	14.80	13.40	17.90	15.70	21.20	21.20	23.80	23.80	27.70	27.70
		kW	1.47		1.58		1.66		1.69		1.81		1.93		2.03		2.18	
	745	Cap	9.04	8.32	12.10	11.10	14.30	13.00	15.20	13.70	18.30	16.00	21.60	21.60	24.30	24.30	28.80	28.80
		kW	1.48		1.59		1.66		1.69		1.80		1.92		2.01		2.12	
	915	Cap	9.36	8.61	12.50	11.40	14.70	13.40	15.60	14.10	18.70	16.40	22.10	22.10	25.00	25.00	29.20	29.20
		kW	1.50		1.60		1.67		1.70		1.80		1.90		1.98		2.10	
65	635	Cap	8.08	7.43	11.10	10.20	13.30	12.10	14.20	12.80	17.20	15.10	20.60	20.60	23.20	23.20	27.20	27.20
		kW	1.48		1.60		1.69		1.72		1.84		1.97		2.08		2.24	
	745	Cap	8.33	7.67	11.40	10.50	13.60	12.40	14.60	13.10	17.70	15.50	21.10	21.10	23.70	23.70	28.00	28.00
		kW	1.50		1.61		1.69		1.72		1.83		1.96		2.06		2.19	
	915	Cap	8.64	7.95	11.80	10.80	14.00	12.80	15.00	13.50	18.10	15.90	21.60	21.60	24.40	24.40	28.70	28.70
		kW	1.52		1.63		1.70		1.73		1.84		1.95		2.04		2.16	
70	635	Cap	7.37	6.78	10.40	9.55	12.60	11.50	13.50	12.20	16.60	14.60	20.10	20.10	22.60	22.60	26.60	26.60
		kW	1.50		1.62		1.71		1.75		1.87		2.01		2.12		2.29	
	745	Cap	7.62	7.01	10.80	9.85	13.00	11.80	13.90	12.60	17.10	15.00	20.60	20.60	23.10	23.10	27.20	27.20
		kW	1.51		1.63		1.72		1.75		1.87		2.00		2.10		2.26	
	915	Cap	7.92	7.29	11.10	10.20	13.40	12.20^	14.40	13.00	17.60	15.40	21.10	21.10	23.80	23.80^	28.10	28.10
		kW	1.53		1.65		1.73		1.76		1.87		1.99		2.09		2.22	
75	635	Cap	6.62	6.09	9.72	8.89	11.90	10.80	12.80	11.60	15.90	14.00	19.40	19.40	22.00	22.00	26.20	26.20
		kW	1.52		1.65		1.74		1.78		1.91		2.05		2.16		2.34	
	745	Cap	6.85	6.30	10.00	9.18	12.30	11.20	13.20	11.90	16.40	14.40	19.90	19.90	22.60	22.60	26.70	26.70
		kW	1.53		1.65		1.74		1.78		1.90		2.04		2.15		2.31	
	915	Cap	7.14	6.57	10.40	9.51	12.70	11.60	13.70	12.30	16.90	14.80	20.50	20.50	23.20	23.20	27.60	27.60
		kW	1.55		1.67		1.76		1.79		1.91		2.04		2.13		2.28	
80	635	Cap	5.87	5.40	9.00	8.22	11.20	10.20	12.10	10.90	15.30	13.40	18.80	18.80	21.40	21.40	25.70	25.70
		kW	1.53		1.67		1.76		1.80		1.94		2.09		2.21		2.40	
	745	Cap	6.08	5.60	9.30	8.50	11.60	10.50	12.50	11.30	15.70	13.80	19.30	19.30	22.00	22.00	26.10	26.10
		kW	1.54		1.68		1.77		1.81		1.94		2.08		2.19		2.36	
	915	Cap	6.36	5.85	9.66	8.83	12.00	10.90	13.00	11.70	16.30	14.30	20.00	20.00	22.50	22.50	27.00	27.00
		kW	1.57		1.70		1.78		1.82		1.94		2.08		2.18		2.34	

Indicates rating condition.

Indicates integrated rating.

LEGEND

Cap – Heating Capacity (1000 Btuh) (includes indoor-fan motor heat)
kW – Total Power Input (includes compressor motor power input, outdoor-fan motor power input, and indoor-fan motor power input)

*Click here to view Systems Index Table.
^ Integrated Rating.

NOTE: Integrated capacity is maximum (instantaneous) capacity less the effect of frost on the outdoor coil and the heat required to defrost it.

INSTANTANEOUS AND INTEGRATED HEATING RATINGS (cont)

SYSTEM 28H* — IN-CEILING CASSETTE SYSTEM (538BNX030 WITH 619FNX036)

TEMP (F) AIR ENTERING INDOOR UNIT	AIR ENTERING INDOOR UNIT (CFM)		AIR TEMPERATURE ENTERING OUTDOOR COIL (F)															
			0		10		17		20		30		40		47		60	
55	635	Cap	11.20	10.40	14.20	13.00	16.40	14.90	17.30	15.70	20.60	18.00	24.40	23.30	27.10	27.10	31.60	31.60
		kW	1.64		1.75		1.84		1.87		2.00		2.16		2.26		2.45	
	745	Cap	11.40	10.50	14.40	13.20	15.60	15.10	17.60	15.90	20.80	18.20	24.70	23.60	27.40	27.40	32.80	32.80
		kW	1.63		1.73		1.80		1.83		1.95		2.08		2.18		2.27	
	915	Cap	11.60	10.70	14.60	13.40	16.90	15.40	17.90	16.20	21.00	18.40	25.10	24.00	27.90	27.90	32.40	32.40
		kW	1.62		1.71		1.77		1.80		1.90		2.01		2.09		2.22	
60	635	Cap	10.90	10.00	13.80	12.70	16.00	14.60	17.00	15.40	20.30	17.70	24.10	23.10	26.80	26.80	31.30	31.30
		kW	1.72		1.84		1.92		1.96		2.10		2.27		2.38		2.58	
	745	Cap	11.10	10.20	14.00	12.90	16.30	14.80	17.20	15.60	20.50	18.00	24.40	23.40	27.10	27.10	32.20	32.20
		kW	1.70		1.81		1.89		1.92		2.05		2.19		2.29		2.42	
	915	Cap	11.30	10.40	14.30	13.10	16.50	15.10	17.50	15.90	20.80	18.20	24.80	23.70	27.60	27.60	32.20	32.20
		kW	1.69		1.79		1.86		1.89		1.99		2.11		2.20		2.34	
65	635	Cap	10.50	9.68	13.50	12.40	15.70	14.30	16.60	15.10	20.00	17.50	23.80	22.80	26.60	26.60	31.00	31.00
		kW	1.79		1.92		2.01		2.05		2.20		2.38		2.50		2.71	
	745	Cap	10.70	9.86	13.70	12.60	15.90	14.50	16.90	15.30	20.20	17.70	24.10	23.10	26.90	26.90	31.70	31.70
		kW	1.78		1.89		1.97		2.01		2.14		2.30		2.41		2.57	
	915	Cap	10.90	10.10	14.00	12.80	16.20	14.80	17.20	15.60	20.50	18.00	24.50	23.50	27.30	27.30	32.00	32.00
		kW	1.77		1.87		1.94		1.97		2.09		2.22		2.31		2.46	
70	635	Cap	10.20	9.34	13.10	12.10	15.40	14.00	16.30	14.80	19.70	17.20	23.60	22.60	26.30	26.30	30.80	30.80
		kW	1.87		2.00		2.10		2.14		2.30		2.49		2.62		2.85	
	745	Cap	10.30	9.52	13.40	12.30	15.60	14.20	16.60	15.00	19.90	17.50	23.80	22.80	26.60	26.60	31.10	31.10
		kW	1.85		1.97		2.06		2.10		2.24		2.40		2.52		2.71	
	915	Cap	10.60	9.73	13.60	12.50	15.90	14.50^	16.90	15.30	20.20	17.70	24.20	23.20	27.00	27.00^	31.80	31.80
		kW	1.84		1.95		2.03		2.06		2.18		2.32		2.42		2.58	
75	635	Cap	9.75	8.98	12.80	11.70	15.00	13.70	16.00	14.50	19.40	17.00	23.30	22.30	26.10	26.10	30.60	30.60
		kW	1.95		2.09		2.20		2.24		2.40		2.61		2.75		2.99	
	745	Cap	9.95	9.16	13.00	11.90	15.30	13.90	16.20	14.70	19.60	17.20	23.60	22.60	26.30	26.30	30.80	30.80
		kW	1.93		2.06		2.16		2.20		2.34		2.52		2.64		2.85	
	915	Cap	10.20	9.37	13.30	12.20	15.60	14.20	16.50	15.00	19.90	17.50	23.90	22.90	26.70	26.70	31.30	31.30
		kW	1.92		2.04		2.12		2.15		2.25		2.43		2.54		2.71	
80	635	Cap	9.35	8.61	12.40	11.40	14.70	13.40	15.60	14.20	19.00	16.70	23.00	22.10	25.80	25.80	30.30	30.30
		kW	2.03		2.18		2.29		2.34		2.51		2.73		2.88		3.13	
	745	Cap	9.55	8.79	12.60	11.60	14.90	13.60	15.90	14.40	19.30	16.90	23.30	22.30	26.10	26.10	30.50	30.50
		kW	2.01		2.15		2.25		2.29		2.45		2.63		2.77		2.99	
	915	Cap	9.79	9.01	12.90	11.80	15.20	13.90	16.20	14.70	19.60	17.20	23.60	22.60	26.40	26.40	30.80	30.80
		kW	2.00		2.12		2.21		2.25		2.38		2.54		2.66		2.84	

Indicates rating condition.

Indicates integrated rating.

LEGEND

Cap – Heating Capacity (1000 Btuh) (includes indoor-fan motor heat)
kW – Total Power Input (includes compressor motor power input, outdoor-fan motor power input, and indoor-fan motor power input)

*Click here to view Systems Index Table.
^ Integrated Rating.

NOTE: Integrated capacity is maximum (instantaneous) capacity less the effect of frost on the outdoor coil and the heat required to defrost it.

INSTANTANEOUS AND INTEGRATED HEATING RATINGS (cont)

SYSTEM 29H* — IN-CEILING CASSETTE SYSTEM (538BNX036 SINGLE-PHASE UNIT WITH 619FNX048)

TEMP (F) AIR ENTERING INDOOR UNIT	AIR ENTERING CONDENSER INDOOR UNIT		AIR TEMPERATURE ENTERING OUTDOOR COIL (F)															
			0		10		17		20		30		40		47		60	
55	680	Cap	14.60	13.50	17.80	16.20	19.90	18.20	21.10	19.00	24.80	21.70	29.20	29.20	33.00	33.00	38.80	38.80
		kW	2.28		2.37		2.43		2.47		2.57		2.70		2.83		2.99	
	880	Cap	14.90	13.70	18.00	16.40	20.20	18.40	21.30	19.20	25.10	22.00	29.70	29.70	33.50	33.50	37.70	37.70
		kW	2.23		2.30		2.35		2.37		2.45		2.55		2.63		2.62	
	1100	Cap	15.00	13.80	18.20	16.60	20.40	18.60	21.50	19.40	25.40	22.30	30.00	30.00	33.20	33.20	36.50	36.50
		kW	2.22		2.27		2.30		2.32		2.38		2.45		2.49		2.47	
60	680	Cap	14.40	13.20	17.60	16.10	19.80	18.10	20.90	18.90	24.60	21.60	29.00	29.00	32.70	32.70	38.50	38.50
		kW	2.38		2.49		2.56		2.59		2.71		2.84		2.97		3.15	
	880	Cap	14.60	13.50	17.80	16.30	20.00	18.30	21.20	19.10	25.00	21.90	29.40	29.40	33.20	33.20	38.00	38.00
		kW	2.34		2.42		2.47		2.49		2.58		2.68		2.78		2.82	
	1100	Cap	14.80	13.60	18.00	16.50	20.20	18.50	21.40	19.30	25.20	22.10	29.80	29.80	33.20	33.20	37.10	37.10
		kW	2.32		2.38		2.42		2.44		2.51		2.59		2.64		2.65	
65	680	Cap	14.10	13.00	17.40	15.90	19.70	17.90	20.80	18.70	24.50	21.40	28.80	28.80	32.50	32.50	38.20	38.20
		kW	2.48		2.60		2.68		2.72		2.84		2.99		3.12		3.31	
	880	Cap	14.40	13.30	17.70	16.10	19.90	18.20	21.00	19.00	24.80	21.70	29.20	29.20	33.00	33.00	38.30	38.30
		kW	2.44		2.53		2.59		2.62		2.71		2.82		2.92		3.02	
	1100	Cap	14.60	13.50	17.90	16.30	20.10	18.30	21.30	19.20	25.10	22.00	29.60	29.60	33.10	33.10	37.80	37.80
		kW	2.43		2.50		2.54		2.56		2.63		2.72		2.78		2.83	
70	680	Cap	13.90	12.80	17.20	15.70	19.50	17.80	20.60	18.60	24.30	21.30	28.60	28.60	32.20	32.20	37.90	37.90
		kW	2.59		2.72		2.81		2.85		2.98		3.13		3.27		3.47	
	880	Cap	14.20	13.10	17.50	16.00	19.80	18.10	20.90	18.90	24.60	21.60	29.00	29.00	32.80	32.80	38.50	38.50
		kW	2.55		2.65		2.72		2.74		2.84		2.96		3.07		3.21	
	1100	Cap	14.40	13.30	17.70	16.20	20.00	18.20^	21.10	19.10	24.90	21.80	29.30	29.30	33.00	33.00^	38.40	38.40
		kW	2.53		2.61		2.66		2.69		2.76		2.86		2.93		3.01	
75	680	Cap	13.60	12.50	17.00	15.50	19.40	17.70	20.50	18.50	24.10	21.10	28.40	28.40	31.90	31.90	37.50	37.50
		kW	2.69		2.83		2.93		2.98		3.12		3.28		3.43		3.63	
	880	Cap	13.90	12.80	17.30	15.80	19.70	17.90	20.80	18.70	24.40	21.40	28.80	28.80	32.50	32.50	38.20	38.20
		kW	2.65		2.76		2.84		2.87		2.98		3.10		3.22		3.37	
	1100	Cap	14.20	13.00	17.50	16.00	19.80	18.10	21.00	18.90	24.70	21.70	29.10	29.10	32.80	32.80	38.20	38.20
		kW	2.64		2.73		2.79		2.82		2.90		3.00		3.08		3.16	
80	680	Cap	13.30	12.20	16.70	15.30	19.20	17.50	20.30	18.30	24.00	21.00	28.10	28.10	31.70	31.70	37.10	37.10
		kW	2.79		2.95		3.06		3.10		3.26		3.43		3.59		3.79	
	880	Cap	13.60	12.50	17.10	15.60	19.50	17.80	20.60	18.60	24.30	21.30	28.50	28.50	32.20	32.20	37.90	37.90
		kW	2.75		2.88		2.97		3.00		3.12		3.25		3.37		3.52	
	1100	Cap	13.90	12.80	17.30	15.90	19.70	18.70	20.80	18.80	24.50	21.50	28.90	28.90	32.60	32.60	38.00	38.00
		kW	2.74		2.84		2.92		2.94		3.03		3.14		3.24		3.32	

Indicates rating condition.

Indicates integrated rating.

LEGEND

Cap – Heating Capacity (1000 Btuh) (includes indoor-fan motor heat)
kW – Total Power Input (includes compressor motor power input, outdoor-fan motor power input, and indoor-fan motor power input)

*Click here to view Systems Index Table.
^ Integrated Rating.

NOTE: Integrated capacity is maximum (instantaneous) capacity less the effect of frost on the outdoor coil and the heat required to defrost it.

INSTANTANEOUS AND INTEGRATED HEATING RATINGS (cont)

SYSTEM 30H* — IN-CEILING CASSETTE SYSTEM (538BPX, BEX, 036 3-PHASE UNIT WITH 619FNX048)

TEMP (F) AIR ENTERING INDOOR UNIT	AIR ENTERING INDOOR UNIT (CFM)		AIR TEMPERATURE ENTERING COIL (F)															
			0		10		17		20		30		40		47		60	
55	660	Cap	15.30	14.10	19.20	17.60	21.90	20.00	23.10	20.80	26.90	23.60	31.00	29.70	33.90	33.90	39.50	39.50
		kW	2.71		2.84		2.93		2.96		3.08		3.18		3.25		3.38	
	880	Cap	16.00	14.70	20.00	18.30	22.90	20.80	24.00	21.70	27.90	24.40	32.20	30.80	35.30	35.30	39.10	39.10
		kW	2.73		2.83		2.91		2.94		3.02		3.08		3.13		3.05	
	1100	Cap	16.60	15.20	20.60	18.90	23.50	21.40	24.70	22.30	28.60	25.10	32.70	31.30	35.60	35.60	40.70	40.70
		kW	2.76		2.85		2.91		2.93		2.99		3.01		3.02		3.01	
60	660	Cap	14.40	13.20	18.30	16.70	21.10	19.20	22.20	20.10	26.20	22.90	30.30	28.90	33.20	33.20	38.70	38.70
		kW	2.74		2.88		2.97		3.01		3.14		3.25		3.33		3.46	
	880	Cap	15.10	13.90	19.10	17.50	22.00	20.00	23.20	20.90	27.20	23.80	31.50	30.10	34.50	34.50	39.10	39.10
		kW	2.76		2.88		2.96		2.99		3.09		3.16		3.21		3.20	
	1100	Cap	15.60	14.40	19.80	18.10	22.70	20.70	23.90	21.50	27.90	24.50	32.10	30.70	35.10	35.10	40.50	40.50
		kW	2.79		2.89		2.97		2.99		3.06		3.10		3.12		3.14	
65	660	Cap	13.40	12.40	17.40	15.90	20.20	18.40	21.40	19.30	25.40	22.30	29.50	28.20	32.40	32.40	37.90	37.90
		kW	2.77		2.92		3.02		3.06		3.20		3.32		3.40		3.54	
	880	Cap	14.10	13.00	18.20	16.70	21.10	19.30	22.40	20.20	26.50	23.20	30.80	29.40	33.80	33.80	39.00	39.00
		kW	2.80		2.92		3.01		3.05		3.16		3.24		3.30		3.35	
	1100	Cap	14.70	13.50	18.90	17.30	21.80	19.90	23.10	20.80	27.20	23.90	31.50	30.10	34.50	34.50	40.30	40.30
		kW	2.83		2.94		3.02		3.05		3.13		3.19		3.22		3.26	
70	660	Cap	12.50	11.50	16.50	15.10	19.30	17.60	20.50	18.50	24.70	21.60	28.80	27.50	31.60	31.60	37.10	37.10
		kW	2.80		2.96		3.07		3.11		3.26		3.38		3.47		3.62	
	880	Cap	13.20	12.10	17.30	15.90	20.30	18.50	21.50	19.40	25.80	22.60	30.00	28.70	33.00	33.00	38.90	38.90
		kW	2.83		2.97		3.07		3.10		3.22		3.32		3.39		3.49	
	1100	Cap	13.70	12.60	18.00	16.50	21.00	19.10^	22.30	20.10	26.50	23.20	30.90	29.60	34.00	34.00^	40.10	40.10
		kW	2.87		2.99		3.08		3.11		3.21		3.27		3.32		3.39	
75	660	Cap	11.50	10.60	15.50	14.20	18.40	16.70	19.60	17.70	23.80	20.90	28.00	26.70	30.90	30.90	36.20	36.20
		kW	2.82		2.99		3.11		3.16		3.31		3.45		3.54		3.69	
	880	Cap	12.10	11.20	16.40	15.00	19.30	17.60	20.60	18.60	25.00	21.90	29.20	27.90	32.20	32.20	37.90	37.90
		kW	2.86		3.01		3.11		3.15		3.28		3.39		3.46		3.57	
	1100	Cap	12.60	11.60	17.00	15.60	20.10	18.30	21.40	19.30	25.80	22.60	30.20	28.90	33.20	33.20	39.30	39.30
		kW	2.90		3.03		3.13		3.16		3.27		3.35		3.41		3.49	
80	660	Cap	10.50	9.66	14.60	13.30	17.40	15.90	18.70	16.90	23.00	20.10	27.20	26.00	30.10	30.10	35.40	35.40
		kW	2.85		3.03		3.15		3.20		3.36		3.51		3.61		3.77	
	880	Cap	11.10	10.20	15.40	14.10	18.40	16.70	19.70	17.80	24.10	21.10	28.40	27.20	31.40	31.40	36.90	36.90
		kW	2.88		3.05		3.16		3.20		3.34		3.46		3.54		3.65	
	1100	Cap	11.60	10.70	16.00	14.70	19.10	17.40	20.50	18.50	25.10	22.10	29.40	28.10	32.40	32.40	38.60	38.60
		kW	2.93		3.08		3.18		3.22		3.34		3.43		3.50		3.58	

Indicates rating condition.

Indicates integrated rating.

LEGEND

Cap – Heating Capacity (1000 Btuh) (includes indoor-fan motor heat)
kW – Total Power Input (includes compressor motor power input, outdoor-fan motor power input, and indoor-fan motor power input)

*Click here to view Systems Index Table.
^ Integrated Rating.

NOTE: Integrated capacity is maximum (instantaneous) capacity less the effect of frost on the outdoor coil and the heat required to defrost it.

COOLING CAPACITIES

TABLE NO. 31* — 538SNX024 (or 1 Circuit of 538SNX048 System) CONDENSING UNIT WITH TWO 619FNX024 IN-CEILING CASSETTE UNITS

TEMP (F) AIR ENTERING CONDENSER (Edb)		AIR ENTERING EVAPORATOR – CFM/BF											
		750/0.04				830/0.05				1050/0.07			
		Air Entering Evaporator – Ewb (F)											
		57	62	67	72	57	62	67	72	57	62	67	72
55	TCG	23.8	24.4	26.4	28.6	24.5	24.9	26.8	28.9	26.1	26.1	27.6	29.7
	SHG	23.8	22.6	18.8	14.8	24.5	23.8	19.7	15.3	26.1	26.1	22.1	16.8
	TC	23.2	23.8	25.8	28.0	23.9	24.2	26.2	28.3	25.3	25.3	26.8	28.9
	kW	1.42	1.42	1.42	1.43	1.44	1.44	1.44	1.45	1.50	1.50	1.50	1.50
	CMP	1.11	1.11	1.11	1.11	1.11	1.11	1.11	1.11	1.11	1.11	1.11	1.11
65	TCG	23.2	23.6	25.6	27.6	23.9	24.1	25.9	28.0	25.4	25.4	26.7	28.7
	SHG	23.2	22.2	18.4	14.4	23.9	23.4	19.3	15.0	25.4	25.4	21.7	16.4
	TC	22.6	23.0	25.0	27.0	23.2	23.4	25.3	27.3	24.5	24.5	25.9	27.9
	kW	1.56	1.56	1.57	1.57	1.58	1.58	1.59	1.59	1.64	1.64	1.64	1.65
	CMP	1.25	1.25	1.25	1.26	1.25	1.25	1.25	1.26	1.25	1.25	1.25	1.26
75	TCG	22.5	22.8	24.7	26.7	23.2	23.3	25.0	27.0	24.6	24.6	25.7	27.6
	SHC	22.5	21.8	18.1	14.1	23.2	22.9	19.0	14.6	24.6	24.6	21.3	16.0
	TC	21.9	22.2	24.1	26.1	22.5	22.6	24.4	26.3	23.8	23.8	24.9	26.8
	kW	1.73	1.73	1.73	1.74	1.75	1.75	1.75	1.76	1.80	1.80	1.81	1.81
	CMP	1.41	1.41	1.42	1.42	1.41	1.41	1.42	1.42	1.41	1.41	1.42	1.42
85	TCG	21.8	22.0	23.8	25.7	22.5	22.5	24.1	26.0	23.8	23.8	24.8	26.6
	SHG	21.8	21.4	17.7	13.7	22.5	22.4	18.6	14.2	23.8	23.8	20.9	15.7
	TC	21.2	21.4	23.2	25.1	21.8	21.8	23.5	25.3	23.0	23.0	23.9	25.8
	kW	1.91	1.91	1.92	1.92	1.93	1.93	1.94	1.94	1.99	1.99	1.99	2.00
	CMP	1.59	1.59	1.60	1.61	1.60	1.59	1.60	1.61	1.60	1.60	1.60	1.61
95	TCG	21.1	21.2	22.9	24.7	21.7	21.7	23.2	25.0	23.0	23.0	23.8	25.6
	SHG	21.1	20.9	17.3	13.4	21.7	21.7	18.2	13.9	23.0	23.0	20.5	15.3
	TC	20.6	20.7	22.3	24.1	21.1	21.1	22.5	24.4	22.2	22.2	23.0	24.8
	kW	2.12	2.12	2.12	2.13	2.14	2.14	2.14	2.16	2.20	2.20	2.20	2.21
	CMP	1.80	1.80	1.81	1.82	1.81	1.80	1.81	1.82	1.81	1.81	1.81	1.82
105	TCG	20.5	20.5	22.0	23.8	21.0	21.0	22.3	24.0	22.2	22.2	22.9	24.5
	SHG	20.5	20.4	17.0	13.0	21.0	21.0	17.8	13.5	22.2	22.2	20.1	14.9
	TC	19.9	19.9	21.4	23.2	20.4	20.4	21.6	23.4	21.4	21.4	22.0	23.7
	kW	2.35	2.35	2.36	2.37	2.38	2.38	2.38	2.39	2.44	2.43	2.44	2.45
	CMP	2.04	2.04	2.05	2.06	2.04	2.04	2.05	2.06	2.05	2.05	2.05	2.06
115	TCG	19.8	19.8	21.1	22.8	20.3	20.3	21.4	23.0	21.4	21.4	21.9	23.4
	SHG	19.8	19.8	16.6	12.7	20.3	20.3	17.5	13.2	21.4	21.4	19.7	14.4
	TC	19.2	19.2	20.5	22.2	19.7	19.7	20.7	22.4	20.6	20.6	21.1	22.6
	kW	2.62	2.62	2.63	2.64	2.64	2.64	2.65	2.67	2.71	2.70	2.71	2.72
	CMP	2.31	2.31	2.32	2.33	2.31	2.31	2.32	2.33	2.32	2.32	2.32	2.33
125	TCG	19.1	19.1	20.2	21.8	19.6	19.6	20.5	21.9	20.6	20.6	21.0	22.3
	SHG	19.1	19.1	16.2	12.3	19.6	19.6	17.1	12.8	20.6	20.6	19.3	14.0
	TC	18.5	18.5	19.6	21.2	18.9	18.9	19.8	21.3	19.8	19.8	20.1	21.5
	kW	2.92	2.93	2.94	2.95	2.95	2.95	2.96	2.97	3.01	3.01	3.01	3.03
	CMP	2.61	2.61	2.62	2.63	2.61	2.62	2.62	2.64	2.63	2.63	2.63	2.64

Rating condition.

LEGEND

BF – Bypass Factor
CMP – Compressor Power
Edb – Entering Dry Bulb
Ewb – Entering Wet Bulb
kW – Total Power (Includes CMP)
SHG – Gross Sensible Capacity (1000 Btuh)
TC – Total Net Cooling Capacity (1000 Btuh)
TCG – Gross Cooling Capacity (1000 Btuh)

*Click here to view Systems Index Table.
Many multi-split systems require the use of more than one cooling capacity table to determine system total capacity and power.

NOTES:
1. Direct interpolation is permissible. Do not extrapolate.
2. The SHG is based on 80 F edb temperature of air entering indoor coil.
   Below 80 F edb, subtract (corr factor x cfm) from SHG.
   Above 80 F edb, add (corr factor x cfm) to SHG.
   Correction Factor = 1.10 x (1 - BF) x (edb - 80).

COOLING CAPACITIES (cont)

TABLE NO. 32* — 538SNX024 (or 1 Circuit of 538SNX048 System) CONDENSING UNIT WITH TWO 619CNX024^ CEILING-SUSPENDED UNITS

TEMP (F) AIR ENTERING CONDENSER (Edb)		AIR ENTERING EVAPORATOR – CFM/BF											
		640/0.01				800/0.01				1000/0.03			
		Air Entering Evaporator – Ewb (F)											
		57	62	67	72	57	62	67	72	57	62	67	72
55	TCG	24.0	24.8	26.8	29.0	25.7	25.9	27.7	29.9	27.3	27.3	28.5	30.6
	SHG	24.0	22.0	18.4	14.7	25.7	24.9	20.5	15.9	27.3	27.3	23.0	17.4
	TC	23.5	24.3	26.4	28.6	25.2	25.4	27.2	29.4	26.6	26.6	27.8	29.9
	kW	1.41	1.41	1.42	1.42	1.45	1.45	1.45	1.45	1.49	1.49	1.49	1.50
	CMP	1.15	1.15	1.15	1.15	1.15	1.15	1.15	1.16	1.15	1.15	1.15	1.16
65	TCG	23.3	24.0	25.9	28.1	25.0	25.1	26.8	28.9	26.5	26.5	27.5	29.5
	SHG	23.3	21.6	18.0	14.3	25.0	24.5	20.1	15.6	26.5	26.5	22.6	17.1
	TC	22.9	23.6	25.5	27.7	24.5	24.6	26.3	28.4	25.9	25.8	26.9	28.9
	kW	1.56	1.56	1.56	1.57	1.59	1.59	1.60	1.60	1.64	1.64	1.64	1.65
	CMP	1.29	1.29	1.30	1.30	1.30	1.30	1.30	1.31	1.30	1.30	1.30	1.31
75	TCG	22.7	23.2	25.1	27.2	24.3	24.3	25.9	27.9	25.7	25.7	26.6	28.5
	SHG	22.7	21.3	17.7	14.0	24.3	24.1	19.8	15.2	25.7	25.7	22.2	16.7
	TC	22.2	22.8	24.6	26.7	23.7	23.8	25.4	27.4	25.1	25.1	25.9	27.8
	kW	1.73	1.73	1.73	1.74	1.76	1.76	1.77	1.78	1.81	1.81	1.81	1.82
	CMP	1.46	1.46	1.47	1.47	1.47	1.47	1.47	1.48	1.47	1.47	1.47	1.48
85	TCG	22.0	22.4	24.2	26.2	23.5	23.5	25.0	26.9	24.9	24.9	25.6	27.5
	SHG	22.0	20.9	17.3	13.6	23.5	23.5	19.4	14.9	24.9	24.9	21.9	16.4
	TC	21.6	22.0	23.8	25.8	23.0	23.0	24.4	26.4	24.2	24.2	25.0	26.8
	kW	1.92	1.92	1.93	1.94	1.96	1.95	1.96	1.97	2.00	2.00	2.00	2.01
	CMP	1.65	1.65	1.66	1.67	1.66	1.66	1.66	1.67	1.66	1.66	1.67	1.67
95	TCG	21.3	21.6	23.3	25.3	22.8	22.8	24.0	25.9	24.1	24.1	24.7	26.4
	SHG	21.3	20.5	16.9	13.3	22.8	22.8	19.0	14.5	24.1	24.1	21.5	16.0
	TC	20.9	21.2	22.9	24.8	22.3	22.3	23.5	25.4	23.4	23.4	24.0	25.7
	kW	2.13	2.14	2.14	2.15	2.17	2.17	2.18	2.19	2.22	2.22	2.22	2.23
	CMP	1.87	1.87	1.88	1.89	1.87	1.88	1.88	1.89	1.88	1.88	1.88	1.90
105	TCG	20.6	20.8	22.4	24.3	22.0	22.0	23.1	24.9	23.3	23.3	23.7	25.4
	SHG	20.6	20.1	16.6	12.9	22.0	22.0	18.7	14.2	23.3	23.3	21.1	15.6
	TC	20.2	20.4	22.0	23.9	21.5	21.5	22.6	24.4	22.6	22.6	23.0	24.7
	kW	2.38	2.38	2.39	2.40	2.42	2.42	2.43	2.44	2.47	2.47	2.47	2.48
	CMP	2.11	2.11	2.12	2.14	2.12	2.12	2.13	2.14	2.13	2.13	2.13	2.15
115	TCG	20.0	20.0	21.5	23.3	21.3	21.3	22.2	23.9	22.4	22.4	22.7	24.3
	SHG	20.0	19.7	16.2	12.6	21.3	21.3	18.3	13.8	22.4	22.4	20.7	15.3
	TC	19.5	19.6	21.1	22.9	20.7	20.7	21.6	23.3	21.8	21.8	22.1	23.6
	kW	2.66	2.66	2.67	2.69	2.70	2.70	2.70	2.72	2.75	2.75	2.75	2.77
	CMP	2.39	2.39	2.40	2.42	2.40	2.40	2.41	2.42	2.41	2.41	2.41	2.43
125	TCG	19.3	19.3	20.6	22.3	20.5	20.5	21.2	22.8	21.6	21.6	21.8	23.2
	SHG	19.3	19.3	15.9	12.3	20.5	20.5	17.9	13.5	21.6	21.6	20.3	14.9
	TC	18.8	18.8	20.2	21.9	20.0	20.0	20.7	22.3	20.9	20.9	21.1	22.5
	kW	2.97	2.97	2.99	3.00	3.02	3.02	3.02	3.04	3.07	3.07	3.07	3.08
	CMP	2.71	2.71	2.72	2.74	2.72	2.72	2.73	2.74	2.73	2.73	2.73	2.75

Rating condition.

LEGEND

BF – Bypass Factor
CMP – Compressor Power
Edb – Entering Dry Bulb
Ewb – Entering Wet Bulb
kW – Total Power (Includes CMP)
SHG – Gross Sensible Capacity (1000 Btuh)
TC – Total Net Cooling Capacity (1000 Btuh)
TCG – Gross Cooling Capacity (1000 Btuh)

*Click here to view Systems Index Table.
Many multi-split systems require the use of more than one cooling capacity table to determine system total capacity and power.
^Field reconfigured for 18,000 Btuh. Refer to fan coil unit installation instructions for details.

NOTES:
1. Direct interpolation is permissible. Do not extrapolate.
2. The SHG is based on 80 F edb temperature of air entering indoor coil.
   Below 80 F edb, subtract (corr factor x cfm) from SHG.
   Above 80 F edb, add (corr factor x cfm) to SHG.
   Correction Factor = 1.10 x (1 - BF) x (edb - 80).

COOLING CAPACITIES (cont)

TABLE NO. 33* — 538SNX024 (or 1 Circuit of 538SNX048 System) CONDENSING UNIT WITH TWO 619ENX018 HIGH WALL UNITS

TEMP (F) AIR ENTERING CONDENSER (Edb)		AIR ENTERING EVAPORATOR – CFM/BF											
		720/0.12				828/0.13				900/0.15			
		Air Entering Evaporator – Ewb (F)											
		57	62	67	72	57	62	67	72	57	62	67	72
55	TCG	22.8	23.7	25.8	28.0	23.8	24.3	26.4	28.6	24.8	25.0	27.0	29.2
	SHG	22.8	21.3	17.8	14.2	23.8	22.8	18.9	14.9	24.8	24.4	20.2	15.7
	TC	22.5	23.5	25.6	27.8	23.5	24.1	26.1	28.3	24.4	24.6	26.6	28.8
	kW	1.31	1.31	1.31	1.32	1.32	1.32	1.32	1.33	1.34	1.34	1.34	1.34
	CMP	1.10	1.10	1.10	1.10	1.10	1.10	1.10	1.11	1.10	1.10	1.10	1.11
65	TCG	22.2	23.0	25.0	27.1	23.1	23.6	25.6	27.7	24.1	24.2	26.1	28.2
	SHG	22.2	20.9	17.4	13.9	23.1	22.4	18.6	14.6	24.1	23.9	19.9	15.4
	TC	21.9	22.7	24.8	26.9	22.8	23.3	25.3	27.4	23.7	23.9	25.7	27.9
	kW	1.45	1.45	1.45	1.46	1.46	1.46	1.47	1.47	1.48	1.48	1.48	1.49
	CMP	1.24	1.24	1.24	1.25	1.24	1.24	1.24	1.25	1.24	1.24	1.24	1.25
75	TCG	21.6	22.2	24.2	26.2	22.5	22.8	24.7	26.7	23.4	23.4	25.2	27.2
	SHG	21.6	20.5	17.1	13.5	22.5	21.9	18.2	14.2	23.4	23.3	19.5	15.0
	TC	21.3	22.0	23.9	26.0	22.2	22.5	24.4	26.5	23.0	23.1	24.8	26.9
	kW	1.61	1.61	1.62	1.62	1.62	1.62	1.63	1.64	1.64	1.64	1.64	1.65
	CMP	1.40	1.40	1.40	1.41	1.40	1.40	1.40	1.41	1.40	1.40	1.41	1.41
85	TCG	20.9	21.4	23.3	25.3	21.8	22.0	23.8	25.8	22.6	22.6	24.3	26.3
	SHG	20.9	20.1	16.7	13.2	21.8	21.5	17.9	13.9	22.6	22.6	19.1	14.7
	TC	20.7	21.2	23.1	25.1	21.5	21.7	23.5	25.5	22.3	22.3	23.9	25.9
	kW	1.79	1.79	1.80	1.81	1.81	1.81	1.81	1.82	1.82	1.82	1.83	1.84
	CMP	1.58	1.58	1.59	1.60	1.58	1.58	1.59	1.60	1.58	1.59	1.59	1.60
95	TCG	20.3	20.7	22.5	24.4	21.1	21.2	22.9	24.8	21.9	21.9	23.3	25.3
	SHG	20.3	19.7	16.4	12.9	21.1	21.0	17.5	13.5	21.9	21.9	18.8	14.3
	TC	20.0	20.4	22.2	24.1	20.8	20.9	22.6	24.5	21.6	21.6	23.0	24.9
	kW	2.00	2.00	2.01	2.02	2.01	2.01	2.02	2.03	2.03	2.03	2.03	2.05
	CMP	1.79	1.79	1.80	1.80	1.79	1.79	1.80	1.81	1.79	1.79	1.80	1.81
105	TCG	19.7	19.9	21.6	23.5	20.4	20.5	22.0	23.9	21.2	21.2	22.4	24.3
	SHG	19.7	19.3	16.0	12.5	20.4	20.4	17.2	13.2	21.2	21.2	18.4	14.0
	TC	19.4	19.7	21.4	23.2	20.2	20.2	21.7	23.6	20.9	20.9	22.1	23.9
	kW	2.23	2.23	2.24	2.25	2.25	2.25	2.26	2.27	2.26	2.27	2.27	2.28
	CMP	2.02	2.02	2.03	2.04	2.02	2.02	2.03	2.04	2.03	2.03	2.03	2.05
115	TCG	19.0	19.2	20.8	22.5	19.8	19.8	21.2	22.9	20.5	20.5	21.5	23.3
	SHG	19.0	18.9	15.7	12.2	19.8	19.8	16.8	12.8	20.5	20.5	18.1	13.6
	TC	18.8	18.9	20.5	22.3	19.5	19.5	20.9	22.6	20.2	20.2	21.2	22.9
	kW	2.50	2.50	2.51	2.52	2.51	2.51	2.52	2.54	2.53	2.53	2.54	2.55
	CMP	2.28	2.28	2.30	2.31	2.29	2.29	2.30	2.31	2.29	2.30	2.30	2.32
125	TCG	18.4	18.4	19.9	21.6	19.1	19.1	20.3	21.9	19.8	19.8	20.6	22.3
	SHG	18.4	18.4	15.4	11.9	19.1	19.1	16.4	12.5	19.8	19.8	17.7	13.3
	TC	18.1	18.2	19.6	21.3	18.8	18.8	20.0	21.6	19.4	19.4	20.2	21.9
	kW	2.80	2.80	2.81	2.83	2.81	2.81	2.83	2.84	2.83	2.84	2.84	2.86
	CMP	2.58	2.58	2.60	2.62	2.59	2.59	2.60	2.62	2.60	2.60	2.60	2.62

Rating condition.

LEGEND

BF – Bypass Factor
CMP – Compressor Power
Edb – Entering Dry Bulb
Ewb – Entering Wet Bulb
kW – Total Power (Includes CMP)
SHG – Gross Sensible Capacity (1000 Btuh)
TC – Total Net Cooling Capacity (1000 Btuh)
TCG – Gross Cooling Capacity (1000 Btuh)

*Click here to view Systems Index Table.
Many multi-split systems require the use of more than one cooling capacity table to determine system total capacity and power.

NOTES:
1. Direct interpolation is permissible. Do not extrapolate.
2. The SHG is based on 80 F edb temperature of air entering indoor coil.
   Below 80 F edb, subtract (corr factor x cfm) from SHG.
   Above 80 F edb, add (corr factor x cfm) to SHG.
   Correction Factor = 1.10 x (1 - BF) x (edb - 80).

COOLING CAPACITIES (cont)

TABLE NO. 34* — 538SNX024 (or 1 Circuit of 538SNX048 System) CONDENSING UNIT WITH ONE 619CNX024^ CEILING-SUSPENDED UNIT AND ONE 619FNX024 IN-CEILING CASSETTE UNIT

TEMP (F) AIR ENTERING CONDENSER (Edb)		AIR ENTERING EVAPORATOR – CFM/BF											
		695/0.06				815/0.07				1025/0.09			
		Air Entering Evaporator – Ewb (F)											
		57	62	67	72	57	62	67	72	57	62	67	72
55	TCG	22.9	23.8	25.9	28.1	24.1	24.5	26.5	28.7	25.6	25.6	27.4	29.5
	SHG	22.9	21.4	17.9	14.3	24.1	23.2	19.3	15.1	25.6	25.6	21.6	16.5
	TC	22.5	23.4	25.4	27.6	23.6	24.0	26.0	28.2	25.0	25.0	26.7	28.9
	kW	1.43	1.43	1.44	1.44	1.46	1.46	1.46	1.47	1.50	1.50	1.50	1.51
	CMP	1.15	1.16	1.16	1.16	1.16	1.16	1.16	1.16	1.16	1.16	1.16	1.17
65	TCG	22.3	23.0	25.0	27.2	23.4	23.7	25.7	27.8	24.9	24.9	26.4	28.6
	SHG	22.3	21.1	17.6	13.9	23.4	22.8	18.9	14.8	24.9	24.9	21.2	16.2
	TC	21.9	22.6	24.6	26.7	22.9	23.2	25.2	27.3	24.2	24.2	25.8	27.9
	kW	1.58	1.58	1.59	1.59	1.61	1.61	1.61	1.62	1.65	1.65	1.65	1.66
	CMP	1.30	1.30	1.31	1.31	1.30	1.31	1.31	1.32	1.31	1.31	1.31	1.32
75	TCG	21.7	22.3	24.2	26.3	22.7	22.9	24.8	26.8	24.2	24.2	25.5	27.6
	SHG	21.7	20.7	17.2	13.6	22.7	22.4	18.6	14.4	24.2	24.2	20.9	15.8
	TC	21.3	21.8	23.8	25.8	22.2	22.4	24.3	26.3	23.5	23.5	24.8	26.9
	kW	1.75	1.75	1.76	1.76	1.78	1.78	1.78	1.79	1.82	1.82	1.83	1.83
	CMP	1.47	1.47	1.48	1.49	1.47	1.47	1.48	1.49	1.48	1.48	1.48	1.49
85	TCG	21.1	21.5	23.4	25.3	22.1	22.2	23.9	25.9	23.4	23.4	24.6	26.5
	SHG	21.1	20.3	16.9	13.3	22.1	21.9	18.2	14.1	23.4	23.4	20.5	15.5
	TC	20.6	21.1	22.9	24.9	21.6	21.6	23.4	25.4	22.8	22.8	23.9	25.9
	kW	1.94	1.94	1.95	1.96	1.97	1.97	1.98	1.99	2.01	2.01	2.02	2.03
	CMP	1.66	1.66	1.67	1.68	1.67	1.67	1.67	1.68	1.67	1.67	1.68	1.69
95	TCG	20.4	20.7	22.5	24.4	21.4	21.4	23.0	24.9	22.7	22.7	23.6	25.5
	SHG	20.4	19.9	16.5	12.9	21.4	21.4	17.9	13.8	22.7	22.7	20.1	15.1
	TC	20.0	20.3	22.1	24.0	20.9	20.9	22.5	24.4	22.0	22.0	23.0	24.9
	kW	2.16	2.16	2.17	2.18	2.19	2.19	2.19	2.21	2.23	2.23	2.24	2.25
	CMP	1.88	1.88	1.89	1.90	1.88	1.88	1.89	1.90	1.89	1.89	1.90	1.91
105	TCG	19.8	20.0	21.6	23.5	20.7	20.7	22.1	24.0	21.9	21.9	22.7	24.5
	SHG	19.8	19.5	16.2	12.6	20.7	20.7	17.5	13.4	21.9	21.9	19.8	14.8
	TC	19.4	19.5	21.2	23.1	20.2	20.2	21.6	23.5	21.3	21.3	22.1	23.9
	kW	2.41	2.41	2.42	2.43	2.43	2.43	2.44	2.46	2.48	2.48	2.49	2.50
	CMP	2.13	2.13	2.14	2.15	2.13	2.13	2.14	2.15	2.14	2.14	2.15	2.16
115	TCG	19.1	19.2	20.8	22.6	20.0	20.0	21.2	23.0	21.1	21.1	21.8	23.5
	SHG	19.1	19.0	15.8	12.3	20.0	20.0	17.2	13.1	21.1	21.1	19.4	14.4
	TC	18.7	18.8	20.4	22.1	19.5	19.5	20.7	22.5	20.5	20.5	21.1	22.9
	kW	2.68	2.69	2.70	2.72	2.72	2.72	2.73	2.74	2.77	2.76	2.77	2.79
	CMP	2.40	2.41	2.42	2.44	2.41	2.41	2.42	2.44	2.42	2.42	2.43	2.44
125	TCG	18.5	18.5	19.9	21.6	19.3	19.3	20.3	22.0	20.3	20.3	20.8	22.5
	SHG	18.5	18.5	15.5	11.9	19.3	19.3	16.8	12.7	20.3	20.3	19.0	14.1
	TC	18.0	18.0	19.5	21.2	18.8	18.8	19.8	21.5	19.7	19.7	20.2	21.8
	kW	3.00	3.00	3.02	3.04	3.03	3.04	3.05	3.06	3.09	3.09	3.09	3.11
	CMP	2.72	2.73	2.74	2.76	2.73	2.73	2.74	2.76	2.74	2.74	2.75	2.77

Rating condition.

LEGEND

BF – Bypass Factor
CMP – Compressor Power
Edb – Entering Dry Bulb
Ewb – Entering Wet Bulb
kW – Total Power (Includes CMP)
SHG – Gross Sensible Capacity (1000 Btuh)
TC – Total Net Cooling Capacity (1000 Btuh)
TCG – Gross Cooling Capacity (1000 Btuh)

*Click here to view Systems Index Table.
Many multi-split systems require the use of more than one cooling capacity table to determine system total capacity and power.
^Field reconfigured for 18,000 Btuh. Refer to fan coil unit installation instructions for details.

NOTES:
1. Direct interpolation is permissible. Do not extrapolate.
2. The SHG is based on 80 F edb temperature of air entering indoor coil.
   Below 80 F edb, subtract (corr factor x cfm) from SHG.
   Above 80 F edb, add (corr factor x cfm) to SHG.
   Correction Factor = 1.10 x (1 - BF) x (edb - 80).

COOLING CAPACITIES (cont)

TABLE NO. 35* — 538SNX024 (or 1 Circuit of 538SNX048 System) CONDENSING UNIT WITH ONE 619FNX024 IN-CEILING CASSETTE UNIT AND ONE 619ENX018 HIGH WALL UNIT

TEMP (F) AIR ENTERING CONDENSER (Edb)		AIR ENTERING EVAPORATOR – CFM/BF											
		735/0.12				829/0.13				1005/0.15			
		Air Entering Evaporator – Ewb (F)											
		57	62	67	72	57	62	67	72	57	62	67	72
55	TCG	23.1	24.0	26.1	28.3	24.0	24.5	26.6	28.8	25.2	25.4	27.3	29.5
	SHG	23.1	21.7	18.1	14.4	24.0	23.0	19.1	15.0	25.2	25.0	20.9	16.1
	TC	22.7	23.6	25.7	27.9	23.4	24.0	26.1	28.3	24.6	24.7	26.7	28.9
	kW	1.38	1.38	1.38	1.39	1.40	1.40	1.40	1.41	1.43	1.43	1.44	1.44
	CMP	1.11	1.11	1.11	1.12	1.11	1.11	1.11	1.12	1.11	1.11	1.12	1.12
65	TCG	22.5	23.3	25.3	27.4	23.3	23.7	25.8	27.9	24.5	24.6	26.4	28.6
	SHG	22.5	21.3	17.8	14.1	23.3	22.6	18.7	14.7	24.5	24.5	20.5	15.8
	TC	22.0	22.8	24.8	27.0	22.8	23.2	25.2	27.4	23.9	23.9	25.8	27.9
	kW	1.52	1.52	1.53	1.53	1.54	1.54	1.55	1.55	1.58	1.58	1.58	1.59
	CMP	1.25	1.25	1.26	1.26	1.25	1.25	1.26	1.26	1.25	1.25	1.26	1.27
75	TCG	21.9	22.5	24.4	26.5	22.6	22.9	24.9	27.0	23.8	23.8	25.5	27.6
	SHG	21.9	20.9	17.4	13.7	22.6	22.1	18.4	14.4	23.8	23.8	20.1	15.4
	TC	21.4	22.0	24.0	26.1	22.1	22.4	24.4	26.4	23.2	23.2	24.9	27.0
	kW	1.69	1.69	1.69	1.70	1.70	1.70	1.71	1.72	1.74	1.74	1.74	1.75
	CMP	1.41	1.42	1.42	1.43	1.42	1.42	1.42	1.43	1.42	1.42	1.42	1.43
85	TCG	21.2	21.7	23.6	25.6	22.0	22.2	24.0	26.0	23.1	23.1	24.6	26.6
	SHG	21.2	20.5	17.0	13.4	22.0	21.7	18.0	14.0	23.1	23.1	19.8	15.1
	TC	20.8	21.2	23.1	25.1	21.4	21.6	23.5	25.5	22.4	22.4	23.9	26.0
	kW	1.87	1.87	1.88	1.89	1.89	1.89	1.89	1.90	1.92	1.93	1.93	1.94
	CMP	1.60	1.60	1.60	1.61	1.60	1.60	1.61	1.61	1.60	1.60	1.61	1.62
95	TCG	20.6	20.9	22.7	24.7	21.3	21.4	23.1	25.0	22.3	22.3	23.6	25.6
	SHG	20.6	20.1	16.7	13.1	21.3	21.2	17.7	13.7	22.3	22.3	19.4	14.7
	TC	20.1	20.5	22.3	24.2	20.8	20.9	22.6	24.5	21.7	21.7	23.0	24.9
	kW	2.08	2.08	2.09	2.10	2.10	2.10	2.10	2.12	2.14	2.13	2.14	2.15
	CMP	1.81	1.81	1.81	1.83	1.81	1.81	1.82	1.83	1.81	1.81	1.82	1.83
105	TCG	20.0	20.1	21.9	23.7	20.6	20.6	22.2	24.1	21.6	21.6	22.7	24.6
	SHG	20.0	19.7	16.3	12.7	20.6	20.6	17.3	13.3	21.6	21.6	19.0	14.3
	TC	19.5	19.7	21.4	23.3	20.1	20.1	21.7	23.5	21.0	21.0	22.1	23.9
	kW	2.31	2.31	2.32	2.34	2.33	2.33	2.34	2.36	2.37	2.37	2.38	2.39
	CMP	2.04	2.04	2.05	2.07	2.05	2.04	2.05	2.07	2.05	2.05	2.06	2.07
115	TCG	19.3	19.4	21.0	22.8	19.9	19.9	21.3	23.1	20.9	20.9	21.8	23.5
	SHG	19.3	19.2	16.0	12.4	19.9	19.9	17.0	13.0	20.9	20.9	18.7	14.0
	TC	18.8	18.9	20.5	22.3	19.4	19.4	20.8	22.6	20.2	20.2	21.2	22.9
	kW	2.58	2.58	2.59	2.61	2.60	2.60	2.62	2.63	2.64	2.64	2.65	2.67
	CMP	2.31	2.31	2.32	2.34	2.32	2.32	2.33	2.34	2.32	2.32	2.33	2.34
125	TCG	18.7	18.7	20.1	21.8	19.2	19.2	20.4	22.1	20.1	20.1	20.8	22.5
	SHG	18.7	18.6	15.6	12.0	19.2	19.2	16.6	12.6	20.1	20.1	18.3	13.7
	TC	18.2	18.2	19.7	21.4	18.7	18.7	19.9	21.6	19.5	19.5	20.2	21.9
	kW	2.89	2.89	2.90	2.92	2.91	2.91	2.92	2.94	2.95	2.95	2.96	2.98
	CMP	2.61	2.62	2.63	2.65	2.62	2.62	2.63	2.65	2.63	2.63	2.64	2.65

Rating condition.

LEGEND

BF – Bypass Factor
CMP – Compressor Power
Edb – Entering Dry Bulb
Ewb – Entering Wet Bulb
kW – Total Power (Includes CMP)
SHG – Gross Sensible Capacity (1000 Btuh)
TC – Total Net Cooling Capacity (1000 Btuh)
TCG – Gross Cooling Capacity (1000 Btuh)

*Click here to view Systems Index Table.
Many multi-split systems require the use of more than one cooling capacity table to determine system total capacity and power.

NOTES:
1. Direct interpolation is permissible. Do not extrapolate.
2. The SHG is based on 80 F edb temperature of air entering indoor coil.
   Below 80 F edb, subtract (corr factor x cfm) from SHG.
   Above 80 F edb, add (corr factor x cfm) to SHG.
   Correction Factor = 1.10 x (1 - BF) x (edb - 80).

COOLING CAPACITIES (cont)

TABLE NO. 36* — 538SNX024 (or 1 Circuit of 538SNX048 System) CONDENSING UNIT WITH ONE 619CNX024^ CEILING-SUSPENDED UNIT AND ONE 619ENX018 HIGH WALL UNIT

TEMP (F) AIR ENTERING CONDENSER (Edb)		AIR ENTERING EVAPORATOR – CFM/BF											
		680/0.08				814/0.10				980/0.12			
		Air Entering Evaporator – Ewb (F)											
		57	62	67	72	57	62	67	72	57	62	67	72
55	TCG	22.6	23.6	25.7	27.9	23.9	24.4	26.4	28.6	25.1	25.2	27.1	29.3
	SHG	22.6	21.0	17.6	14.1	23.9	22.9	19.1	15.0	25.1	25.0	20.8	16.1
	TC	22.3	23.3	25.4	27.5	23.5	24.0	26.0	28.2	24.6	24.7	26.6	28.8
	kW	1.38	1.38	1.38	1.38	1.40	1.40	1.40	1.41	1.42	1.42	1.43	1.43
	CMP	1.13	1.13	1.14	1.14	1.13	1.13	1.14	1.14	1.14	1.14	1.14	1.15
65	TCG	22.0	22.8	24.9	27.0	23.2	23.6	25.6	27.7	24.4	24.4	26.2	28.3
	SHG	22.0	20.6	17.2	13.7	23.2	22.6	18.7	14.7	24.4	24.4	20.5	15.7
	TC	21.7	22.5	24.5	26.7	22.8	23.2	25.2	27.3	23.9	23.9	25.7	27.9
	kW	1.52	1.52	1.53	1.53	1.54	1.54	1.55	1.55	1.57	1.57	1.57	1.58
	CMP	1.28	1.28	1.28	1.29	1.28	1.28	1.29	1.29	1.28	1.28	1.29	1.30
75	TCG	21.4	22.1	24.0	26.1	22.6	22.8	24.7	26.8	23.7	23.7	25.3	27.4
	SHG	21.4	20.2	16.9	13.4	22.6	22.1	18.4	14.3	23.7	23.7	20.1	15.4
	TC	21.1	21.8	23.7	25.8	22.2	22.4	24.3	26.4	23.2	23.2	24.8	26.9
	kW	1.69	1.69	1.69	1.70	1.71	1.71	1.72	1.72	1.74	1.74	1.74	1.75
	CMP	1.44	1.45	1.45	1.46	1.45	1.45	1.45	1.46	1.45	1.45	1.46	1.46
85	TCG	20.8	21.3	23.2	25.2	21.9	22.1	23.8	25.8	23.0	23.0	24.4	26.4
	SHG	20.8	19.9	16.5	13.1	21.9	21.7	18.0	14.0	23.0	23.0	19.8	15.0
	TC	20.5	21.0	22.9	24.9	21.5	21.7	23.4	25.4	22.5	22.5	23.9	25.9
	kW	1.88	1.88	1.88	1.89	1.90	1.90	1.91	1.92	1.93	1.93	1.93	1.94
	CMP	1.63	1.64	1.64	1.65	1.64	1.64	1.64	1.65	1.64	1.64	1.65	1.65
95	TCG	20.2	20.6	22.4	24.3	21.2	21.3	23.0	24.9	22.2	22.3	23.5	25.4
	SHG	20.2	19.5	16.2	12.7	21.2	21.2	17.7	13.6	22.2	22.3	19.4	14.7
	TC	19.8	20.2	22.0	24.0	20.8	20.9	22.6	24.5	21.8	21.8	23.0	24.9
	kW	2.09	2.09	2.10	2.11	2.11	2.11	2.12	2.13	2.14	2.14	2.15	2.16
	CMP	1.85	1.85	1.85	1.87	1.85	1.85	1.86	1.87	1.85	1.86	1.86	1.87
105	TCG	19.5	19.8	21.5	23.4	20.5	20.5	22.1	23.9	21.5	21.5	22.6	24.4
	SHG	19.5	19.1	15.8	12.4	20.5	20.5	17.3	13.3	21.5	21.5	19.0	14.4
	TC	19.2	19.5	21.2	23.0	20.1	20.1	21.7	23.5	21.0	21.0	22.1	23.9
	kW	2.33	2.33	2.34	2.35	2.36	2.36	2.37	2.38	2.39	2.39	2.39	2.41
	CMP	2.09	2.09	2.10	2.11	2.09	2.09	2.10	2.11	2.10	2.10	2.10	2.12
115	TCG	18.9	19.1	20.7	22.5	19.9	19.9	21.2	22.9	20.8	20.8	21.6	23.4
	SHG	18.9	18.7	15.5	12.1	19.9	19.9	17.0	12.9	20.8	20.8	18.6	14.0
	TC	18.6	18.7	20.3	22.1	19.5	19.5	20.8	22.5	20.3	20.3	21.1	22.9
	kW	2.60	2.61	2.62	2.63	2.63	2.63	2.64	2.66	2.66	2.66	2.67	2.69
	CMP	2.36	2.36	2.37	2.39	2.37	2.37	2.38	2.39	2.37	2.38	2.38	2.40
125	TCG	18.3	18.3	19.8	21.5	19.2	19.2	20.3	22.0	20.0	20.0	20.7	22.4
	SHG	18.3	18.2	15.2	11.7	19.2	19.2	16.6	12.6	20.0	20.0	18.3	13.6
	TC	17.9	18.0	19.5	21.2	18.8	18.8	19.9	21.6	19.5	19.5	20.2	21.9
	kW	2.91	2.92	2.93	2.95	2.94	2.94	2.96	2.97	2.98	2.98	2.98	3.00
	CMP	2.67	2.67	2.69	2.71	2.68	2.68	2.69	2.71	2.69	2.69	2.70	2.72

Rating condition.

LEGEND

BF – Bypass Factor
CMP – Compressor Power
Edb – Entering Dry Bulb
Ewb – Entering Wet Bulb
kW – Total Power (Includes CMP)
SHG – Gross Sensible Capacity (1000 Btuh)
TC – Total Net Cooling Capacity (1000 Btuh)
TCG – Gross Cooling Capacity (1000 Btuh)

*Click here to view Systems Index Table.
Many multi-split systems require the use of more than one cooling capacity table to determine system total capacity and power.
^Field reconfigured for 18,000 Btuh. Refer to fan coil unit installation instructions for details.

NOTES:
1. Direct interpolation is permissible. Do not extrapolate.
2. The SHG is based on 80 F edb temperature of air entering indoor coil.
   Below 80 F edb, subtract (corr factor x cfm) from SHG.
   Above 80 F edb, add (corr factor x cfm) to SHG.
   Correction Factor = 1.10 x (1 - BF) x (edb - 80).

COOLING CAPACITIES (cont)

TABLE NO. 40* — 538SNX024 (or 1 Circuit of 538SNX048 System) CONDENSING UNIT WITH ONE 619ENX024 HIGH WALL UNIT

TEMP (F) AIR ENTERING CONDENSER (Edb)		AIR ENTERING EVAPORATOR – CFM/BF											
		456/0.04				502/0.04				550/0.05			
		Air Entering Evaporator – Ewb (F)											
		57	62	67	72	57	62	67	72	57	62	67	72
55	TCG	20.9	22.2	23.1	23.6	21.4	22.6	23.5	23.9	21.8	22.4	23.4	23.7
	SHG	20.3	17.6	14.5	11.5	21.2	18.3	15.0	11.7	21.8	18.6	15.1	11.7
	TC	20.7	22.0	22.9	23.4	21.1	22.4	23.3	23.6	21.5	22.2	23.2	23.5
	kW	1.34	1.34	1.35	1.35	1.34	1.35	1.36	1.36	1.35	1.35	1.36	1.36
	CMP	1.16	1.16	1.17	1.17	1.16	1.17	1.17	1.17	1.16	1.16	1.17	1.17
65	TCG	20.4	22.1	23.4	24.1	21.0	22.5	23.7	24.5	21.6	22.9	23.8	24.8
	SHG	20.1	17.7	14.8	11.7	21.0	18.5	15.2	12.0	21.6	19.3	15.6	12.2
	TC	20.2	21.9	23.2	23.9	20.8	22.3	23.5	24.2	21.4	22.6	23.6	24.5
	kW	1.48	1.49	1.50	1.50	1.49	1.50	1.50	1.51	1.50	1.51	1.51	1.52
	CMP	1.30	1.31	1.32	1.32	1.30	1.31	1.32	1.32	1.31	1.31	1.32	1.33
75	TCG	19.8	21.5	23.2	24.7	20.5	22.0	23.5	24.6	21.2	22.4	23.8	24.9
	SHG	19.7	17.5	14.8	12.0	20.5	18.4	15.2	12.1	21.2	19.2	15.8	12.4
	TC	19.6	21.3	23.0	24.5	20.3	21.8	23.2	24.4	21.0	22.2	23.6	24.7
	kW	1.64	1.66	1.66	1.68	1.66	1.67	1.67	1.68	1.67	1.67	1.68	1.69
	CMP	1.46	1.48	1.48	1.50	1.47	1.48	1.48	1.49	1.47	1.48	1.49	1.50
85	TCG	19.2	20.8	22.7	24.3	19.9	21.3	23.1	24.4	20.6	21.7	23.5	24.8
	SHG	19.2	17.1	14.6	11.8	19.9	18.1	15.1	12.0	20.6	19.0	15.7	12.4
	TC	19.0	20.6	22.5	24.1	19.7	21.1	22.9	24.2	20.4	21.5	23.2	24.5
	kW	1.82	1.84	1.85	1.87	1.84	1.85	1.86	1.87	1.85	1.87	1.87	1.88
	CMP	1.65	1.66	1.67	1.69	1.65	1.67	1.68	1.69	1.66	1.67	1.68	1.69
95	TCG	18.6	20.0	22.0	23.9	19.4	20.5	22.4	24.2	20.0	20.9	22.8	24.4
	SHG	18.6	16.8	14.3	11.7	19.4	17.7	14.9	12.0	20.0	18.6	15.6	12.3
	TC	18.4	19.8	21.8	23.7	19.1	20.3	22.2	24.0	19.8	20.7	22.6	24.1
	kW	2.03	2.05	2.07	2.09	2.05	2.06	2.08	2.10	2.06	2.07	2.09	2.10
	CMP	1.85	1.87	1.89	1.91	1.86	1.88	1.89	1.91	1.87	1.88	1.90	1.91
105	TCG	18.1	19.3	21.2	23.1	18.8	19.7	21.7	23.5	19.4	20.1	22.1	23.7
	SHG	18.1	16.4	14.0	11.4	18.8	17.3	14.6	11.7	19.4	18.2	15.3	12.0
	TC	17.9	19.1	21.0	22.9	18.5	19.5	21.5	23.3	19.1	19.9	21.9	23.5
	kW	2.26	2.28	2.31	2.33	2.28	2.30	2.33	2.34	2.30	2.31	2.34	2.35
	CMP	2.08	2.10	2.13	2.15	2.10	2.11	2.14	2.16	2.11	2.12	2.15	2.16
115	TCG	17.5	18.5	20.4	22.4	18.1	19.0	20.9	22.7	18.7	19.3	21.2	23.0
	SHG	17.5	16.0	13.6	11.1	18.1	16.9	14.3	11.4	18.7	17.8	14.9	11.8
	TC	17.3	18.3	20.2	22.2	17.9	18.7	20.6	22.5	18.5	19.1	21.0	22.8
	kW	2.53	2.55	2.59	2.61	2.55	2.56	2.60	2.62	2.57	2.58	2.62	2.63
	CMP	2.35	2.37	2.41	2.43	2.36	2.38	2.42	2.44	2.38	2.39	2.43	2.44
125	TCG	16.9	17.8	19.6	21.6	17.5	18.2	20.0	21.9	18.1	18.5	20.4	22.2
	SHG	16.9	15.7	13.3	10.8	17.5	16.5	13.9	11.2	18.1	17.4	14.6	11.5
	TC	16.7	17.6	19.4	21.4	17.3	17.9	19.8	21.7	17.9	18.3	20.1	22.0
	kW	2.83	2.85	2.90	2.93	2.85	2.87	2.91	2.94	2.87	2.88	2.93	2.95
	CMP	2.65	2.67	2.72	2.75	2.67	2.68	2.73	2.76	2.68	2.69	2.74	2.76

Rating condition.

LEGEND

BF – Bypass Factor
CMP – Compressor Power
Edb – Entering Dry Bulb
Ewb – Entering Wet Bulb
kW – Total Power (Includes CMP)
SHG – Gross Sensible Capacity (1000 Btuh)
TC – Total Net Cooling Capacity (1000 Btuh)
TCG – Gross Cooling Capacity (1000 Btuh)

*Click here to view Systems Index Table.
Many multi-split systems require the use of more than one cooling capacity table to determine system total capacity and power.

NOTES:
1. Direct interpolation is permissible. Do not extrapolate.
2. The SHG is based on 80 F edb temperature of air entering indoor coil.
   Below 80 F edb, subtract (corr factor x cfm) from SHG.
   Above 80 F edb, add (corr factor x cfm) to SHG.
   Correction Factor = 1.10 x (1 - BF) x (edb - 80).

COOLING CAPACITIES (cont)

TABLE NO. 41* — 538SNX024 (or 1 Circuit of 538SNX048 System) CONDENSING UNIT WITH ONE 619CNX024 CEILING-SUSPENDED UNIT

TEMP (F) AIR ENTERING CONDENSER (Edb)		AIR ENTERING EVAPORATOR – CFM/BF											
		400/0.03				500/0.03				600/0.04			
		Air Entering Evaporator – Ewb (F)											
		57	62	67	72	57	62	67	72	57	62	67	72
55	TCG	22.7	24.2	25.8	26.6	23.7	25.1	26.2	26.6	24.6	25.4	26.1	27.4
	SHG	21.3	18.5	15.8	12.7	23.1	19.8	16.4	12.9	24.5	20.6	16.7	13.4
	TC	22.3	23.8	25.5	26.2	23.3	24.6	25.7	26.1	24.1	24.8	25.6	26.8
	kW	1.41	1.42	1.44	1.45	1.44	1.45	1.47	1.47	1.47	1.47	1.48	1.50
	CMP	1.15	1.15	1.17	1.18	1.15	1.16	1.18	1.18	1.16	1.17	1.17	1.19
65	TCG	21.5	23.5	25.3	26.3	22.8	24.5	26.2	27.2	23.7	25.2	26.6	27.1
	SHG	20.4	18.2	15.5	12.6	22.5	19.6	16.5	13.2	23.7	20.9	17.2	13.3
	TC	21.1	23.2	24.9	25.9	22.3	24.0	25.8	26.8	23.2	24.7	26.1	26.6
	kW	1.53	1.54	1.56	1.57	1.56	1.57	1.59	1.61	1.58	1.60	1.62	1.62
	CMP	1.26	1.28	1.30	1.30	1.28	1.28	1.31	1.32	1.28	1.29	1.31	1.32
75	TCG	20.2	22.2	24.1	25.7	21.5	23.2	25.1	26.6	22.5	23.9	25.7	26.6
	SHG	19.4	17.3	14.9	12.3	21.3	18.8	16.0	12.9	22.5	20.2	16.8	13.1
	TC	19.9	21.8	23.8	25.3	21.0	22.8	24.7	26.2	22.0	23.4	25.2	26.1
	kW	1.65	1.67	1.70	1.72	1.68	1.70	1.73	1.75	1.71	1.74	1.76	1.77
	CMP	1.39	1.41	1.44	1.46	1.40	1.43	1.45	1.47	1.42	1.44	1.46	1.47
85	TCG	18.9	20.8	23.0	25.1	20.1	21.9	24.0	25.9	21.3	22.7	24.7	26.2
	SHG	18.4	16.4	14.3	11.9	20.1	18.1	15.4	12.6	21.3	19.4	16.3	12.9
	TC	18.6	20.5	22.6	24.7	19.7	21.5	23.6	25.5	20.8	22.2	24.2	25.7
	kW	1.76	1.80	1.84	1.87	1.80	1.84	1.87	1.90	1.84	1.87	1.89	1.92
	CMP	1.51	1.54	1.58	1.62	1.53	1.57	1.60	1.63	1.55	1.58	1.60	1.63
95	TCG	17.7	19.5	21.5	23.6	18.9	20.5	22.6	24.6	20.0	21.2	23.3	25.2
	SHG	17.4	15.5	13.5	11.3	18.9	17.1	14.6	12.0	20.0	18.4	15.6	12.5
	TC	17.4	19.1	21.2	23.3	18.5	20.1	22.2	24.2	19.5	20.7	22.8	24.7
	kW	1.90	1.94	1.99	2.03	1.95	1.98	2.03	2.07	1.99	2.01	2.07	2.09
	CMP	1.66	1.69	1.74	1.78	1.68	1.71	1.77	1.80	1.70	1.73	1.78	1.81
105	TCG	16.5	18.2	20.1	22.1	17.7	19.1	21.0	23.2	18.7	19.7	21.7	23.8
	SHG	16.5	14.7	12.7	10.6	17.7	16.2	13.8	11.4	18.7	17.5	14.8	11.9
	TC	16.2	17.8	19.7	21.8	17.4	18.7	20.6	22.8	18.3	19.3	21.2	23.3
	kW	2.06	2.10	2.15	2.21	2.11	2.14	2.20	2.26	2.15	2.17	2.23	2.29
	CMP	1.82	1.86	1.91	1.97	1.85	1.88	1.93	2.00	1.87	1.90	1.95	2.01
115	TCG	15.4	16.9	18.7	20.6	16.6	17.7	19.5	21.5	17.5	18.3	20.1	22.1
	SHG	15.4	13.8	11.9	9.94	16.6	15.3	13.0	10.6	17.5	16.5	13.9	11.2
	TC	15.1	16.6	18.4	20.3	16.3	17.3	19.2	21.2	17.1	17.8	19.7	21.7
	kW	2.24	2.28	2.34	2.40	2.30	2.33	2.38	2.45	2.34	2.36	2.42	2.50
	CMP	2.01	2.04	2.10	2.16	2.04	2.07	2.12	2.20	2.06	2.08	2.14	2.22
125	TCG	14.4	15.6	17.3	19.1	15.5	16.4	18.1	20.0	16.3	16.9	18.6	20.5
	SHG	14.4	13.0	11.2	9.28	15.5	14.4	12.2	9.95	16.3	15.6	13.1	10.5
	TC	14.1	15.3	17.0	18.8	15.1	16.0	17.8	19.6	15.9	16.5	18.2	20.1
	kW	2.44	2.48	2.54	2.61	2.50	2.53	2.58	2.66	2.54	2.56	2.62	2.70
	CMP	2.21	2.25	2.31	2.37	2.24	2.27	2.33	2.41	2.27	2.29	2.35	2.44

Rating condition.

LEGEND

BF – Bypass Factor
CMP – Compressor Power
Edb – Entering Dry Bulb
Ewb – Entering Wet Bulb
kW – Total Power (Includes CMP)
SHG – Gross Sensible Capacity (1000 Btuh)
TC – Total Net Cooling Capacity (1000 Btuh)
TCG – Gross Cooling Capacity (1000 Btuh)

*Click here to view Systems Index Table.
Many multi-split systems require the use of more than one cooling capacity table to determine system total capacity and power.

NOTES:
1. Direct interpolation is permissible. Do not extrapolate.
2. The SHG is based on 80 F edb temperature of air entering indoor coil.
   Below 80 F edb, subtract (corr factor x cfm) from SHG.
   Above 80 F edb, add (corr factor x cfm) to SHG.
   Correction Factor = 1.10 x (1 - BF) x (edb - 80).

COOLING CAPACITIES (cont)

TABLE NO. 42* — 538SNX024 (or 1 Circuit of 538SNX048 System) CONDENSING UNIT WITH ONE 619FNX036 IN-CEILING CASSETTE UNIT

TEMP (F) AIR ENTERING CONDENSER (Edb)		AIR ENTERING EVAPORATOR – CFM/BF											
		635/0.08				745/0.10				915/0.12			
		Air Entering Evaporator – Ewb (F)											
		57	62	67	72	57	62	67	72	57	62	67	72
55	TCG	26.7	28.5	30.1	31.7	28.0	29.2	30.9	32.1	29.4	29.9	31.8	33.0
	SHG	26.7	23.7	19.4	15.5	28.0	25.3	20.6	16.0	29.4	27.3	22.1	16.8
	TC	26.3	28.0	29.6	31.2	27.4	28.7	30.4	31.6	28.8	29.2	31.2	32.3
	kW	2.14	2.15	2.16	2.18	2.18	2.19	2.20	2.21	2.24	2.24	2.26	2.27
	CMP	1.71	1.72	1.73	1.75	1.72	1.73	1.74	1.75	1.73	1.73	1.75	1.76
65	TCG	25.2	26.7	29.0	30.4	26.5	27.5	29.7	31.1	27.9	28.4	30.3	31.9
	SHG	25.2	22.6	19.0	15.0	26.5	24.4	20.2	15.6	27.9	26.7	21.6	16.5
	TC	24.8	26.2	28.6	30.0	26.0	27.0	29.2	30.6	27.3	27.7	29.6	31.3
	kW	2.16	2.16	2.18	2.19	2.19	2.20	2.22	2.23	2.25	2.25	2.27	2.29
	CMP	1.76	1.77	1.79	1.80	1.77	1.78	1.80	1.81	1.78	1.78	1.80	1.82
75	TCG	23.5	24.8	27.1	28.7	24.8	25.6	27.8	29.4	26.2	26.5	28.4	30.3
	SHG	23.5	21.5	18.0	14.2	24.8	23.2	19.2	14.9	26.2	25.5	20.8	15.9
	TC	23.1	24.4	26.7	28.3	24.3	25.1	27.3	28.9	25.6	25.9	27.8	29.7
	kW	2.15	2.16	2.18	2.19	2.19	2.19	2.21	2.23	2.24	2.24	2.26	2.28
	CMP	1.79	1.80	1.82	1.83	1.80	1.81	1.83	1.84	1.81	1.82	1.83	1.85
85	TCG	21.9	23.0	25.1	27.0	23.1	23.7	25.8	27.8	24.5	24.7	26.6	28.6
	SHG	21.9	20.3	17.0	13.5	23.1	22.0	18.2	14.3	24.5	24.3	19.9	15.3
	TC	21.5	22.6	24.7	26.6	22.6	23.3	25.4	27.3	23.9	24.1	26.0	28.0
	kW	2.14	2.16	2.17	2.19	2.18	2.18	2.20	2.22	2.22	2.23	2.24	2.27
	CMP	1.82	1.83	1.85	1.87	1.84	1.84	1.86	1.88	1.84	1.85	1.86	1.89
95	TCG	20.2	21.1	23.2	25.1	21.4	21.8	23.8	25.8	22.7	22.8	24.5	26.6
	SHG	20.2	19.0	16.0	12.7	21.4	20.7	17.1	13.4	22.7	22.7	18.9	14.5
	TC	19.9	20.7	22.8	24.7	20.9	21.3	23.4	25.3	22.2	22.2	24.0	26.0
	kW	2.10	2.11	2.13	2.15	2.13	2.14	2.16	2.18	2.18	2.18	2.20	2.23
	CMP	1.82	1.83	1.85	1.87	1.83	1.84	1.85	1.88	1.85	1.85	1.86	1.89
105	TCG	18.6	19.3	21.3	23.2	19.7	19.9	21.9	23.8	20.9	20.9	22.5	24.5
	SHG	18.6	17.7	14.9	11.9	19.7	19.3	16.1	12.5	20.9	20.9	17.7	13.6
	TC	18.3	18.9	20.9	22.9	19.3	19.5	21.4	23.3	20.4	20.4	22.0	24.0
	kW	2.03	2.04	2.07	2.09	2.06	2.07	2.09	2.11	2.11	2.11	2.12	2.15
	CMP	1.78	1.79	1.82	1.84	1.80	1.80	1.83	1.84	1.81	1.81	1.83	1.86
115	TCG	17.1	17.6	19.4	21.3	18.1	18.2	19.9	21.8	19.2	19.2	20.5	22.4
	SHG	17.1	16.5	13.8	11.0	18.1	17.9	15.0	11.7	19.2	19.2	16.6	12.7
	TC	16.8	17.3	19.1	21.0	17.7	17.8	19.5	21.4	18.7	18.7	20.0	21.9
	kW	1.89	1.90	1.93	1.96	1.93	1.93	1.95	1.98	1.97	1.97	1.99	2.01
	CMP	1.68	1.69	1.72	1.75	1.70	1.70	1.73	1.75	1.72	1.72	1.74	1.76
125	TCG	15.6	15.9	17.5	19.4	16.5	16.5	18.0	19.8	17.5	17.5	18.5	20.4
	SHG	15.6	15.3	12.8	10.1	16.5	16.5	13.8	10.8	17.5	17.5	15.4	11.8
	TC	15.3	15.6	17.2	19.0	16.1	16.1	17.6	19.4	17.0	17.0	18.1	19.9
	kW	1.76	1.77	1.80	1.83	1.79	1.79	1.82	1.84	1.83	1.83	1.85	1.87
	CMP	1.59	1.59	1.62	1.65	1.60	1.60	1.63	1.66	1.62	1.62	1.64	1.67

Rating condition.

LEGEND

BF – Bypass Factor
CMP – Compressor Power
Edb – Entering Dry Bulb
Ewb – Entering Wet Bulb
kW – Total Power (Includes CMP)
SHG – Gross Sensible Capacity (1000 Btuh)
TC – Total Net Cooling Capacity (1000 Btuh)
TCG – Gross Cooling Capacity (1000 Btuh)

*Click here to view Systems Index Table.
Many multi-split systems require the use of more than one cooling capacity table to determine system total capacity and power.

NOTES:
1. Direct interpolation is permissible. Do not extrapolate.
2. The SHG is based on 80 F edb temperature of air entering indoor coil.
   Below 80 F edb, subtract (corr factor x cfm) from SHG.
   Above 80 F edb, add (corr factor x cfm) to SHG.
   Correction Factor = 1.10 x (1 - BF) x (edb - 80).

COOLING CAPACITIES
SYSTEM 43* – 619ENX024 WITH 538JNX018

TEMP (F) AIR ENTERING CONDENSER (Edb)		AIR ENTERING EVAPORATOR — CFM/BF											
		456/0.04				502/0.04				550/0.05			
		Air Entering Evaporator — Ewb (F)											
		57	62	67	72	57	62	67	72	57	62	67	72
55	TCG	17.3	18.7	20.0	21.0	18.0	19.1	20.2	21.2	18.5	19.4	20.4	21.3
	SHG	17.3	15.5	13.0	10.6	18.0	16.2	13.4	10.8	18.5	16.8	13.8	11.0
	TC	17.2	18.6	19.9	20.8	17.8	18.9	20.1	21.0	18.4	19.2	20.3	21.2
	kW	1.10	1.12	1.14	1.15	1.11	1.12	1.14	1.15	1.12	1.13	1.14	1.16
	CMP	0.937	0.953	0.971	0.984	0.944	0.958	0.974	0.987	0.950	0.963	0.977	0.990
	LDB	40.1	44.5	50.2	56.2	42.4	46.3	52.1	57.9	44.6	47.9	53.8	59.5
	LWB	38.8	44.2	49.9	56.0	40.0	45.7	51.5	57.5	41.2	47.1	52.9	58.9
65	TCG	16.8	18.2	19.8	21.1	17.5	18.7	20.2	21.3	18.1	19.0	20.5	21.5
	SHG	14.9	13.6	11.6	9.5	15.6	14.3	12.1	9.7	16.1	15.0	12.5	9.9
	TC	16.6	18.1	19.7	21.0	17.3	18.5	20.0	21.2	18.0	18.9	20.3	21.4
	kW	1.23	1.23	1.25	1.27	1.22	1.23	1.25	1.27	1.23	1.24	1.26	1.27
	CMP	1.06	1.06	1.08	1.10	1.05	1.07	1.09	1.10	1.06	1.07	1.09	1.11
	LDB	41.4	45.0	50.2	55.9	43.4	46.5	51.9	57.6	45.4	47.9	53.4	59.2
	LWB	39.5	44.7	50.0	55.9	40.6	46.1	51.5	57.4	41.6	47.4	52.9	58.8
75	TCG	16.2	17.5	19.4	21.0	16.9	18.0	19.8	21.2	17.6	18.3	20.1	21.5
	SHG	16.2	14.9	12.9	10.6	16.9	15.7	13.5	10.9	17.6	16.6	14.0	11.2
	TC	16.1	17.4	19.2	20.8	16.8	17.8	19.6	21.1	17.4	18.2	20.0	21.3
	kW	1.34	1.36	1.37	1.40	1.36	1.36	1.38	1.40	1.36	1.36	1.38	1.41
	CMP	1.17	1.19	1.21	1.23	1.19	1.19	1.21	1.23	1.19	1.19	1.21	1.24
	LDB	42.6	45.8	50.6	56.0	44.6	47.2	52.1	57.6	46.5	48.4	53.4	59.0
	LWB	40.1	45.5	50.5	56.0	41.2	46.8	51.9	57.5	42.1	48.0	53.2	58.8
85	TCG	15.7	16.8	18.7	20.6	16.4	17.2	19.1	20.9	16.9	17.6	19.5	21.1
	SHG	15.7	14.6	12.6	10.5	16.4	15.4	13.2	10.8	16.9	16.2	13.8	11.2
	TC	15.6	16.6	18.5	20.4	16.2	17.0	18.9	20.7	16.8	17.4	19.3	21.0
	kW	1.47	1.49	1.52	1.54	1.48	1.50	1.52	1.54	1.49	1.51	1.52	1.55
	CMP	1.30	1.32	1.35	1.37	1.31	1.33	1.35	1.38	1.33	1.34	1.36	1.38
	LDB	43.8	46.6	51.3	56.4	45.8	47.9	52.6	57.8	47.7	49.1	53.9	59.1
	LWB	40.8	46.3	51.2	56.4	41.8	47.6	52.5	57.8	42.7	48.7	53.7	59.0
95	TCG	15.1	16.0	17.9	19.9	15.7	16.4	18.3	20.3	16.3	16.8	17.6	20.6
	SHG	15.1	14.2	12.2	10.2	15.7	15.0	12.9	10.6	16.3	15.8	12.7	11.0
	TC	15.0	15.8	17.7	19.7	15.6	16.3	18.1	20.1	16.2	16.6	17.4	20.4
	kW	1.60	1.62	1.68	1.70	1.62	1.64	1.68	1.70	1.64	1.65	1.69	1.71
	CMP	1.43	1.46	1.51	1.53	1.45	1.47	1.52	1.54	1.47	1.48	1.52	1.54
	LDB	45.2	47.5	52.1	57.0	47.1	48.7	53.4	58.3	48.8	49.8	54.5	59.4
	LWB	41.5	47.2	52.0	57.0	42.5	48.3	53.2	58.3	43.3	49.3	54.3	59.4
105	TCG	14.5	15.2	17.0	19.1	15.1	15.5	17.4	19.5	15.6	15.9	17.8	19.9
	SHG	14.5	13.8	11.9	9.9	15.1	14.6	12.5	10.3	15.6	15.4	13.1	10.7
	TC	14.3	15.0	16.9	18.9	14.9	15.4	17.3	19.3	15.5	15.8	17.6	19.7
	kW	1.75	1.77	1.83	1.88	1.77	1.79	1.85	1.89	1.79	1.80	1.86	1.89
	CMP	1.59	1.61	1.66	1.72	1.60	1.62	1.68	1.72	1.62	1.63	1.70	1.73
	LDB	46.7	48.4	52.9	57.7	48.5	49.5	54.1	58.9	50.2	50.6	55.2	59.9
	LWB	42.3	48.1	52.8	57.7	43.2	49.1	54.0	58.9	44.0	50.1	55.0	59.9
115	TCG	13.8	14.3	16.1	18.2	14.4	14.7	16.5	18.6	14.9	15.0	16.8	18.9
	SHG	13.8	13.4	11.5	9.5	14.4	14.2	12.1	10.0	14.9	14.9	12.7	10.4
	TC	13.7	14.2	15.9	18.0	14.3	14.5	16.3	18.4	14.8	14.9	16.7	18.8
	kW	1.93	1.94	2.00	2.09	1.95	1.96	2.02	2.10	1.96	1.97	2.03	2.10
	CMP	1.76	1.78	1.84	1.92	1.78	1.79	1.85	1.93	1.80	1.80	1.86	1.94
	LDB	48.2	49.3	53.8	58.5	49.9	50.4	54.9	59.6	51.5	51.5	55.9	60.6
	LWB	43.0	48.9	53.7	58.5	43.9	50.0	54.8	59.6	44.7	50.8	55.7	60.6
125	TCG	13.2	13.4	15.2	17.2	13.7	13.9	15.5	17.6	14.3	14.2	15.8	17.9
	SHG	13.2	13.0	11.1	9.2	13.7	13.9	11.7	9.6	14.3	14.2	12.3	10.0
	TC	13.0	13.3	15.0	17.0	13.5	13.7	15.3	17.5	14.2	14.0	15.6	17.8
	kW	2.13	2.14	2.20	2.29	2.14	2.10	2.21	2.31	2.12	2.16	2.22	2.33
	CMP	1.96	1.97	2.03	2.12	1.98	1.94	2.05	2.15	1.96	2.00	2.06	2.16
	LDB	49.7	50.2	54.7	59.3	51.4	51.0	55.8	60.3	52.7	53.0	56.7	61.3
	LWB	43.8	49.9	54.6	59.3	44.6	50.7	55.6	60.3	45.2	51.5	56.5	61.2

LEGEND

BF — Bypass Factor
CMP — Compressor
Edb — Entering Dry Bulb
Ewb — Entering Wet Bulb
kW — Total Power
LDB — Leaving Dry Bulb
LWB — Leaving Wet Bulb
SHG — Gross Sensible Capacity (1000 Btuh)
TC — Total Net Cooling Capacity (1000 Btuh)
TCG — Gross Cooling Capacity (1000 Btuh)

Rating Condition

Not recommended for long-term operation

*Click here to view Systems Index Table.

NOTES:
1. Direct interpolation is permissible. Do not extrapolate.
2. The SHG is based on 80 F edb temperature of air entering indoor coil.
   Below 80 F edb, subtract (corr factor x cfm) from SHG.
   Above 80 F edb, add (corr factor x cfm) to SHG.
   Correction Factor = 1.10 x (1 – BF) x (edb – 80).

COOLING CAPACITIES (cont)
SYSTEM 44* – 619ENX024 WITH 538JNX024

TEMP (F) AIR ENTERING CONDENSER (Edb)		AIR ENTERING EVAPORATOR — CFM/BF											
		456/0.04				502/0.04				550/0.05			
		Air Entering Evaporator — Ewb (F)											
		57	62	67	72	57	62	67	72	57	62	67	72
55	TCG	21.4	23.1	24.1	24.4	22.1	23.5	24.2	24.3	22.6	23.8	24.3	24.1
	SHG	20.2	17.9	15.1	12.2	21.3	18.5	15.4	12.3	22.3	19.1	15.7	12.3
	TC	21.3	23.0	24.0	24.3	21.9	23.3	24.1	24.1	22.5	23.6	24.1	24.0
	kW	1.24	1.25	1.27	1.28	1.25	1.26	1.27	1.28	1.25	1.26	1.27	1.28
	CMP	1.09	1.11	1.12	1.13	1.10	1.11	1.12	1.13	1.10	1.11	1.12	1.13
	LDB	34.9	40.3	46.8	54.3	36.8	42.7	49.1	56.0	38.8	44.9	51.5	58.6
	LWB	34.4	39.9	46.3	53.8	36.1	42.0	48.1	54.7	37.8	43.8	50.1	56.9
65	TCG	20.7	22.8	24.5	25.6	21.4	23.4	24.9	25.7	21.2	23.9	25.2	25.7
	SHG	19.8	17.8	15.4	12.6	20.9	18.7	15.8	12.8	21.0	19.5	16.2	13.0
	TC	20.5	22.6	24.4	25.4	21.2	23.3	24.7	25.5	21.0	23.7	25.0	25.6
	kW	1.40	1.40	1.42	1.43	1.39	1.41	1.42	1.44	1.40	1.41	1.43	1.44
	CMP	1.25	1.25	1.27	1.29	1.25	1.26	1.27	1.29	1.25	1.26	1.28	1.29
	LDB	35.9	40.5	46.0	52.4	37.6	42.3	48.2	54.7	61.6	44.1	50.3	56.9
	LWB	35.4	40.3	45.9	52.4	37.0	42.0	47.9	54.2	60.8	43.6	49.7	56.1
75	TCG	19.8	21.9	24.2	25.9	20.5	22.6	24.8	26.2	20.5	23.2	25.2	26.4
	SHG	19.3	17.3	15.3	12.7	20.3	18.3	15.9	13.0	20.5	19.2	16.5	13.3
	TC	19.7	21.8	24.1	25.7	20.4	22.5	24.6	26.0	20.3	23.0	25.1	26.2
	kW	1.55	1.58	1.59	1.60	1.56	1.58	1.59	1.61	1.56	1.58	1.60	1.61
	CMP	1.40	1.43	1.44	1.46	1.41	1.43	1.44	1.46	1.41	1.43	1.45	1.47
	LDB	37.0	41.5	46.3	52.1	38.9	43.1	48.1	54.1	60.6	44.6	49.9	55.9
	LWB	36.5	41.3	46.2	52.1	37.9	42.8	48.0	54.1	60.6	44.3	49.6	55.8
85	TCG	19.0	21.0	23.3	25.6	19.7	21.6	24.0	26.1	20.5	22.2	24.4	26.4
	SHG	18.8	16.9	14.9	12.6	19.7	17.8	15.5	13.0	20.5	18.7	16.2	13.4
	TC	18.8	20.8	23.2	25.5	19.5	21.5	23.9	25.9	20.3	22.0	24.3	26.2
	kW	1.71	1.75	1.78	1.80	1.72	1.76	1.78	1.80	1.74	1.78	1.80	1.81
	CMP	1.56	1.60	1.63	1.65	1.58	1.62	1.64	1.65	1.59	1.63	1.65	1.66
	LDB	38.1	42.6	47.2	52.4	40.1	44.1	48.8	54.2	42.1	45.5	49.4	55.8
	LWB	37.5	42.3	47.1	52.4	38.8	43.8	48.7	54.2	39.9	45.2	50.8	55.8
95	TCG	18.1	20.0	22.3	24.8	18.9	20.6	23.0	25.4	19.7	21.1	22.6	25.8
	SHG	18.1	16.4	14.4	12.3	18.9	17.3	15.1	12.7	19.7	18.2	15.1	13.1
	TC	17.9	19.8	22.2	24.6	18.7	20.4	22.8	25.2	19.5	21.0	22.4	25.7
	kW	1.88	1.93	1.99	2.01	1.90	1.94	2.00	2.01	1.92	1.96	2.00	2.02
	CMP	1.73	1.78	1.84	1.86	1.75	1.79	1.85	1.86	1.77	1.81	1.86	1.87
	LDB	39.7	43.7	48.3	53.2	41.8	45.2	49.8	54.8	43.7	46.5	51.1	56.2
	LWB	38.6	43.5	48.2	53.2	39.7	44.9	49.7	54.8	40.7	46.1	51.0	56.2
105	TCG	17.2	18.9	21.2	23.7	18.0	19.5	21.8	24.3	18.8	19.9	22.3	24.9
	SHG	17.2	15.8	13.8	11.8	18.0	16.7	14.5	12.3	18.8	17.6	15.2	12.7
	TC	17.1	18.7	21.0	23.6	17.9	19.3	21.6	24.2	18.6	19.8	22.2	24.7
	kW	2.07	2.12	2.18	2.24	2.09	2.13	2.20	2.24	2.11	2.15	2.22	2.25
	CMP	1.92	1.97	2.03	2.09	1.94	1.98	2.05	2.10	1.96	2.00	2.07	2.10
	LDB	41.6	44.9	49.4	54.2	43.5	46.3	50.8	55.6	45.3	47.5	52.1	56.9
	LWB	39.6	44.7	49.4	54.2	40.6	46.0	50.7	55.6	41.5	47.1	52.0	56.9
115	TCG	16.3	17.7	20.0	22.5	17.1	18.2	20.5	23.1	17.8	18.7	21.0	23.6
	SHG	16.3	15.2	13.3	11.3	17.1	16.1	14.0	11.8	17.8	17.0	14.7	12.2
	TC	16.2	17.5	19.8	22.3	16.9	18.0	20.4	22.9	17.6	18.5	20.9	23.4
	kW	2.26	2.31	2.39	2.47	2.29	2.32	2.40	2.50	2.31	2.34	2.42	2.50
	CMP	2.11	2.16	2.24	2.33	2.14	2.18	2.25	2.35	2.16	2.20	2.27	2.35
	LDB	43.6	46.2	50.6	55.3	45.4	47.5	52.0	56.6	47.1	48.6	53.2	57.8
	LWB	40.7	46.0	50.5	55.3	41.6	47.2	51.8	56.6	42.5	48.2	53.0	57.8
125	TCG	15.4	16.3	18.6	21.1	16.1	16.8	19.2	21.7	16.7	17.2	19.6	22.2
	SHG	15.4	14.6	12.7	10.8	16.1	15.4	13.4	11.2	16.7	16.3	14.1	11.7
	TC	15.2	16.2	18.5	21.0	15.9	16.6	19.0	21.5	16.6	17.1	19.5	22.0
	kW	2.46	2.50	2.59	2.69	2.49	2.52	2.61	2.72	2.52	2.54	2.63	2.74
	CMP	2.32	2.35	2.45	2.55	2.34	2.37	2.47	2.57	2.37	2.39	2.48	2.59
	LDB	45.8	47.6	51.9	56.5	47.5	48.8	53.1	57.7	49.1	49.9	54.2	58.8
	LWB	41.8	47.4	51.8	56.5	42.7	48.5	53.0	57.7	43.5	49.4	54.0	58.8

LEGEND

BF — Bypass Factor
CMP — Compressor
Edb — Entering Dry Bulb
Ewb — Entering Wet Bulb
kW — Total Power
LDB — Leaving Dry Bulb
LWB — Leaving Wet Bulb
SHG — Gross Sensible Capacity (1000 Btuh)
TC — Total Net Cooling Capacity (1000 Btuh)
TCG — Gross Cooling Capacity (1000 Btuh)

Rating Condition

Not recommended for long-term operation

*Click here to view Systems Index Table.

NOTES:
1. Direct interpolation is permissible. Do not extrapolate.
2. The SHG is based on 80 F edb temperature of air entering indoor coil.
   Below 80 F edb, subtract (corr factor x cfm) from SHG.
   Above 80 F edb, add (corr factor x cfm) to SHG.
   Correction Factor = 1.10 x (1 – BF) x (edb – 80).

COOLING CAPACITIES (cont)
SYSTEM 45* – 619CNX024 WITH 538JNX018†

TEMP (F) AIR ENTERING CONDENSER (Edb)		AIR ENTERING EVAPORATOR — CFM/BF											
		320/0.02				400/0.03				500/0.03			
		Air Entering Evaporator — Ewb (F)											
		57	62	67	72	57	62	67	72	57	62	67	72
55	TCG	15.3	17.0	18.6	20.1	16.6	18.2	19.7	20.8	18.0	19.1	20.3	21.4
	SHG	14.3	13.0	11.5	9.8	16.3	14.6	12.5	10.3	18.0	16.2	13.6	10.9
	TC	15.1	16.7	18.4	19.8	16.4	18.0	19.4	20.6	17.8	18.8	20.0	21.1
	kW	1.14	1.13	1.15	1.17	1.13	1.15	1.17	1.18	1.14	1.16	1.18	1.19
	CMP	0.929	0.925	0.943	0.963	0.920	0.939	0.958	0.975	0.937	0.951	0.968	0.984
	LDB	32.9	37.5	42.6	48.4	37.0	41.7	47.3	53.3	41.9	45.8	51.6	57.5
	LWB	32.9	37.5	42.6	48.4	36.7	41.7	47.2	53.3	39.8	45.5	51.2	57.2
65	TCG	14.8	16.4	18.2	19.9	16.0	17.7	19.4	20.8	17.6	18.8	20.3	21.5
	SHG	14.0	12.6	11.3	9.7	16.0	14.3	12.4	10.3	17.6	16.1	13.6	11.0
	TC	14.6	16.1	18.0	19.6	15.8	17.4	19.1	20.6	17.3	18.5	20.0	21.2
	kW	1.22	1.26	1.26	1.28	1.25	1.25	1.27	1.29	1.25	1.26	1.29	1.31
	CMP	1.018	1.048	1.050	1.071	1.044	1.044	1.065	1.09	1.043	1.057	1.079	1.10
	LDB	33.9	38.5	43.3	48.7	37.9	42.4	47.5	53.3	42.9	46.0	51.5	57.2
	LWB	33.9	38.5	43.3	48.7	37.6	42.4	47.5	53.3	40.3	45.9	51.3	57.1
75	TCG	14.3	15.8	17.6	19.5	15.5	17.0	18.9	20.6	17.1	18.1	19.9	21.4
	SHG	13.7	12.3	11.0	9.5	15.5	14.0	12.2	10.2	17.1	15.9	13.5	11.0
	TC	14.0	15.6	17.4	19.2	15.2	16.8	18.6	20.3	16.8	17.9	19.6	21.1
	kW	1.33	1.36	1.38	1.40	1.36	1.39	1.40	1.42	1.38	1.39	1.41	1.43
	CMP	1.12	1.16	1.18	1.20	1.15	1.18	1.19	1.21	1.18	1.18	1.20	1.23
	LDB	35.0	39.6	44.2	49.2	39.2	43.3	48.1	53.5	44.0	46.6	51.7	57.2
	LWB	34.9	39.6	44.2	49.2	38.4	43.3	48.1	53.5	40.9	46.5	51.6	57.2
85	TCG	13.7	15.2	17.0	18.9	15.0	16.4	18.3	20.1	16.5	17.4	19.3	21.0
	SHG	13.3	12.0	10.6	9.2	15.0	13.6	11.9	10.0	16.5	15.5	13.3	10.9
	TC	13.4	15.0	16.7	18.6	14.7	16.1	18.0	19.9	16.2	17.1	19.0	20.7
	kW	1.45	1.48	1.52	1.54	1.47	1.51	1.54	1.56	1.51	1.53	1.55	1.57
	CMP	1.24	1.27	1.32	1.34	1.27	1.30	1.33	1.35	1.31	1.33	1.34	1.37
	LDB	36.2	40.6	45.3	50.1	40.6	44.2	48.9	54.0	45.2	47.4	52.2	57.5
	LWB	36.1	40.6	45.3	50.1	39.1	44.2	48.9	54.0	41.5	47.3	52.2	57.5
95	TCG	13.1	14.6	16.3	18.2	14.4	15.6	17.5	19.5	15.9	16.6	18.1	20.4
	SHG	13.0	11.7	10.3	8.9	14.4	13.3	11.5	9.8	15.9	15.1	12.7	10.6
	TC	12.8	14.3	16.0	17.9	14.1	15.4	17.2	19.2	15.6	16.3	17.8	20.2
	kW	1.58	1.61	1.66	1.71	1.61	1.64	1.70	1.72	1.65	1.67	1.71	1.73
	CMP	1.37	1.41	1.45	1.50	1.40	1.43	1.49	1.51	1.44	1.47	1.50	1.53
	LDB	37.4	41.8	46.4	51.2	42.1	45.2	49.9	54.8	46.5	48.2	52.9	58.0
	LWB	37.2	41.8	46.4	51.2	39.9	45.1	49.9	54.8	42.2	48.0	52.9	58.0
105	TCG	12.5	13.9	15.6	17.5	13.9	14.9	16.7	18.7	15.3	15.8	17.7	19.7
	SHG	12.5	11.3	10.0	8.6	13.9	12.9	11.2	9.4	15.3	14.7	12.6	10.4
	TC	12.2	13.6	15.3	17.2	13.6	14.6	16.4	18.4	15.0	15.5	17.4	19.4
	kW	1.72	1.76	1.81	1.88	1.76	1.79	1.85	1.91	1.80	1.82	1.89	1.92
	CMP	1.52	1.56	1.61	1.67	1.56	1.58	1.64	1.70	1.60	1.61	1.68	1.71
	LDB	39.2	43.0	47.5	52.2	43.6	46.2	50.8	55.6	47.9	49.0	53.6	58.6
	LWB	38.3	43.0	47.5	52.2	40.7	46.1	50.8	55.6	42.9	48.8	53.6	58.6
115	TCG	11.9	13.1	14.8	16.7	13.3	14.2	15.8	17.8	14.7	14.9	16.7	18.8
	SHG	11.9	11.0	9.6	8.3	13.3	12.6	10.8	9.1	14.7	14.3	12.2	10.0
	TC	11.6	12.9	14.5	16.4	13.0	13.9	15.6	17.6	14.4	14.6	16.5	18.6
	kW	1.89	1.93	1.98	2.05	1.93	1.94	2.02	2.10	1.96	1.99	2.05	2.13
	CMP	1.68	1.72	1.78	1.84	1.73	1.73	1.81	1.90	1.76	1.78	1.85	1.92
	LDB	41.0	44.2	48.7	53.3	45.2	46.9	51.8	56.5	49.0	49.9	54.4	59.3
	LWB	39.3	44.2	48.7	53.3	41.5	46.9	51.8	56.5	43.4	49.6	54.4	59.3
125	TCG	11.4	12.3	14.1	15.8	12.6	13.2	14.9	17.0	13.9	14.0	15.8	17.9
	SHG	11.4	10.6	9.3	7.9	12.6	12.1	10.4	8.8	13.9	13.9	11.8	9.7
	TC	11.1	12.1	13.9	15.5	12.4	13.0	14.7	16.7	13.6	13.7	15.5	17.6
	kW	2.08	2.12	2.14	2.25	2.13	2.15	2.22	2.30	2.18	2.18	2.25	2.35
	CMP	1.87	1.91	1.93	2.04	1.92	1.95	2.01	2.10	1.97	1.97	2.04	2.14
	LDB	42.8	45.5	49.7	54.5	46.9	48.2	52.8	57.4	50.8	50.8	55.3	60.0
	LWB	40.3	45.5	49.7	54.5	42.4	48.1	52.8	57.4	44.3	50.5	55.3	60.0

LEGEND

BF — Bypass Factor
CMP — Compressor
Edb — Entering Dry Bulb
Ewb — Entering Wet Bulb
kW — Total Power
LDB — Leaving Dry Bulb
LWB — Leaving Wet Bulb
SHG — Gross Sensible Capacity (1000 Btuh)
TC — Total Net Cooling Capacity (1000 Btuh)
TCG — Gross Cooling Capacity (1000 Btuh)

Rating Condition

Not recommended for long-term operation

*Click here to view Systems Index Table.

†The 40QAB024 unit must be field configured to an 018 size unit by changing the motor speed fan tap plug. Refer to Installation Instructions for more details.

NOTES:
1. Direct interpolation is permissible. Do not extrapolate.
2. The SHG is based on 80 F edb temperature of air entering indoor coil.
   Below 80 F edb, subtract (corr factor x cfm) from SHG.
   Above 80 F edb, add (corr factor x cfm) to SHG.
   Correction Factor = 1.10 x (1 – BF) x (edb – 80).

COOLING CAPACITIES (cont)
SYSTEM 46* – 619CNX024 WITH 538JNX024

TEMP (F) AIR ENTERING CONDENSER (Edb)		AIR ENTERING EVAPORATOR — CFM/BF											
		400/0.03				500/0.03				600/0.04			
		Air Entering Evaporator — Ewb (F)											
		57	62	67	72	57	62	67	72	57	62	67	72
55	TCG	20.8	22.9	24.5	25.3	22.5	24.1	25.4	26.2	23.6	24.7	25.7	26.8
	SHG	19.1	17.3	15.0	12.8	21.7	19.1	16.2	13.4	23.6	20.3	16.7	12.7
	TC	20.5	22.6	24.2	25.0	22.2	23.8	25.1	25.9	23.3	24.4	25.4	26.5
	kW	1.28	1.29	1.31	1.32	1.29	1.31	1.32	1.34	1.30	1.32	1.33	1.35
	CMP	1.09	1.11	1.13	1.14	1.10	1.12	1.14	1.15	1.11	1.13	1.15	1.16
	LDB	31.8	36.5	42.4	48.2	36.1	41.6	47.6	54.0	40.1	45.8	51.5	57.2
	LWB	31.7	36.5	42.4	48.2	35.7	41.3	47.5	54.0	38.8	44.9	51.0	57.0
65	TCG	20.0	22.2	24.4	26.0	21.7	23.9	25.6	26.7	23.2	24.8	26.1	27.1
	SHG	18.7	16.9	15.0	12.7	21.3	19.0	16.3	13.3	23.2	20.8	17.2	12.6
	TC	19.7	21.9	24.1	25.7	21.4	23.6	25.3	26.4	22.9	24.6	25.9	26.8
	kW	1.43	1.44	1.46	1.48	1.44	1.45	1.48	1.49	1.45	1.46	1.48	1.51
	CMP	1.25	1.26	1.27	1.30	1.26	1.27	1.29	1.31	1.26	1.28	1.30	1.33
	LDB	32.9	37.5	42.5	48.6	37.0	41.7	47.3	53.7	40.9	45.0	51.2	59.5
	LWB	32.8	37.5	42.5	48.6	36.7	41.6	47.3	53.7	39.2	44.8	50.7	57.2
75	TCG	19.3	21.3	23.7	25.9	20.8	23.0	25.3	27.0	22.4	24.2	26.2	27.5
	SHG	18.2	16.4	14.6	12.6	20.7	18.6	16.2	13.4	22.4	20.5	17.5	14.0
	TC	19.0	21.0	23.4	25.6	20.5	22.7	25.0	26.7	22.1	23.9	25.9	27.2
	kW	1.58	1.62	1.63	1.65	1.61	1.63	1.64	1.67	1.63	1.64	1.65	1.68
	CMP	1.39	1.43	1.45	1.46	1.42	1.44	1.46	1.48	1.44	1.45	1.47	1.49
	LDB	34.0	38.6	43.4	48.7	38.1	42.6	47.5	53.4	42.2	45.5	50.8	56.9
	LWB	33.9	38.6	43.4	48.7	37.6	42.5	47.5	53.4	39.9	45.3	50.7	56.8
85	TCG	18.4	20.5	22.8	25.3	20.0	22.0	24.4	26.7	21.6	23.1	25.6	27.5
	SHG	17.7	16.0	14.2	12.3	20.0	18.1	15.8	13.3	21.6	20.0	17.2	14.1
	TC	18.1	20.2	22.5	25.0	19.7	21.7	24.1	26.4	21.3	22.8	25.3	27.2
	kW	1.74	1.78	1.83	1.84	1.77	1.81	1.84	1.86	1.81	1.83	1.85	1.87
	CMP	1.55	1.59	1.64	1.66	1.59	1.63	1.65	1.67	1.62	1.65	1.66	1.69
	LDB	35.3	39.8	44.5	49.4	39.6	43.6	48.4	53.7	43.5	46.3	51.2	56.8
	LWB	35.2	39.8	44.5	49.4	38.5	43.5	48.4	53.7	40.6	46.1	51.1	56.8
95	TCG	17.5	19.5	21.8	24.3	19.2	21.0	23.4	25.9	20.8	22.0	22.8	26.9
	SHG	17.2	15.5	13.7	11.9	19.2	17.6	15.3	12.9	20.8	19.5	15.6	13.8
	TC	17.2	19.2	21.5	24.0	18.9	20.7	23.1	25.6	20.5	21.7	22.5	26.6
	kW	1.91	1.95	2.01	2.06	1.95	1.99	2.06	2.07	1.99	2.02	2.06	2.09
	CMP	1.72	1.77	1.82	1.88	1.76	1.81	1.87	1.89	1.80	1.83	1.88	1.90
	LDB	36.7	41.1	45.8	50.6	41.2	44.6	49.3	54.3	45.0	47.2	52.0	57.1
	LWB	36.5	41.1	45.8	50.6	39.4	44.5	49.3	54.3	41.4	47.1	51.9	57.1
105	TCG	16.5	18.4	20.7	23.2	18.3	19.8	22.2	24.8	19.8	20.8	23.2	25.9
	SHG	16.5	14.9	13.2	11.4	18.3	17.0	14.8	12.5	19.8	18.9	16.2	13.4
	TC	16.2	18.2	20.4	22.9	18.0	19.5	21.9	24.5	19.6	20.5	22.9	25.6
	kW	2.09	2.14	2.21	2.28	2.14	2.18	2.25	2.31	2.18	2.21	2.28	2.32
	CMP	1.90	1.96	2.02	2.09	1.96	2.00	2.06	2.13	2.00	2.03	2.10	2.13
	LDB	38.3	42.5	47.1	51.8	43.0	45.8	50.4	55.3	46.6	48.2	52.9	57.8
	LWB	37.9	42.5	47.1	51.8	40.4	45.7	50.4	55.3	42.2	48.0	52.8	57.8
115	TCG	15.6	17.3	19.5	22.0	17.4	18.5	20.9	23.5	18.9	19.5	21.9	24.6
	SHG	15.6	14.4	12.6	10.9	17.4	16.4	14.2	12.0	18.9	18.3	15.7	12.9
	TC	15.3	17.1	19.2	21.7	17.1	18.2	20.6	23.2	18.6	19.2	21.6	24.3
	kW	2.28	2.34	2.41	2.49	2.35	2.38	2.46	2.55	2.39	2.41	2.49	2.57
	CMP	2.09	2.16	2.23	2.30	2.16	2.20	2.27	2.36	2.21	2.23	2.30	2.39
	LDB	40.7	43.9	48.4	53.1	44.8	47.0	51.6	56.3	48.3	49.3	53.8	58.6
	LWB	39.2	43.9	48.4	53.1	41.3	46.9	51.6	56.3	43.1	49.0	53.8	58.6
125	TCG	14.7	16.0	18.3	20.7	16.4	17.2	19.5	22.1	17.8	18.1	20.4	23.1
	SHG	14.7	13.7	12.1	10.3	16.4	15.8	13.6	11.4	17.8	17.6	15.1	12.4
	TC	14.4	15.7	18.0	20.4	16.1	16.9	19.2	21.8	17.5	17.8	20.2	22.8
	kW	2.48	2.53	2.63	2.71	2.55	2.59	2.67	2.77	2.61	2.62	2.71	2.82
	CMP	2.29	2.34	2.44	2.53	2.36	2.40	2.49	2.59	2.43	2.44	2.52	2.63
	LDB	43.0	45.6	49.9	54.4	47.0	48.2	52.8	57.4	50.1	50.4	54.8	59.6
	LWB	40.4	45.6	49.9	54.4	42.4	48.1	52.8	57.4	43.9	50.0	54.8	59.6

LEGEND

BF — Bypass Factor
CMP — Compressor
Edb — Entering Dry Bulb
Ewb — Entering Wet Bulb
kW — Total Power
LDB — Leaving Dry Bulb
LWB — Leaving Wet Bulb
SHG — Gross Sensible Capacity (1000 Btuh)
TC — Total Net Cooling Capacity (1000 Btuh)
TCG — Gross Cooling Capacity (1000 Btuh)

Rating Condition

Not recommended for long-term operation

*Click here to view Systems Index Table.

NOTES:
1. Direct interpolation is permissible. Do not extrapolate.
2. The SHG is based on 80 F edb temperature of air entering indoor coil.
   Below 80 F edb, subtract (corr factor x cfm) from SHG.
   Above 80 F edb, add (corr factor x cfm) to SHG.
   Correction Factor = 1.10 x (1 – BF) x (edb – 80).

COOLING CAPACITIES (cont)
SYSTEM 47* – 619CNX036 WITH 538JNX030

TEMP (F) AIR ENTERING CONDENSER (Edb)		AIR ENTERING EVAPORATOR — CFM/BF											
		640/0.02				740/0.02				840/0.03			
		Air Entering Evaporator — Ewb (F)											
		57	62	67	72	57	62	67	72	57	62	67	72
55	TCG	26.7	28.7	30.6	31.8	27.9	29.3	30.9	31.7	28.8	29.9	31.5	32.4
	SHG	26.5	23.3	19.5	15.4	27.9	24.8	20.1	15.4	28.8	26.3	21.1	15.8
	TC	25.8	27.8	29.7	30.9	27.0	28.4	30.0	30.8	27.9	29.0	30.6	31.5
	kW	1.89	1.94	2.00	2.05	1.92	1.95	2.00	2.05	1.94	1.97	2.01	2.05
	CMP	1.47	1.52	1.58	1.63	1.50	1.54	1.58	1.64	1.53	1.55	1.59	1.63
	LDB	38.4	43.5	49.9	56.9	42.1	46.4	53.0	60.2	45.5	48.5	54.9	61.8
	LWB	37.8	43.2	49.0	55.5	39.9	45.8	51.7	58.2	41.6	47.6	53.4	59.6
65	TCG	25.8	28.2	30.4	31.9	27.4	29.1	31.0	32.1	28.6	29.7	31.3	32.2
	SHG	25.8	23.2	19.8	16.0	27.4	24.9	20.8	16.6	28.6	26.5	21.6	16.7
	TC	24.9	27.3	29.5	31.1	26.5	28.2	30.1	31.2	27.7	28.8	30.4	31.4
	kW	2.08	2.12	2.17	2.21	2.11	2.14	2.19	2.24	2.13	2.16	2.20	2.24
	CMP	1.67	1.71	1.76	1.80	1.69	1.73	1.77	1.83	1.71	1.74	1.79	1.83
	LDB	39.5	43.7	49.2	55.3	42.8	46.2	51.9	58.3	45.8	48.4	54.3	60.7
	LWB	38.5	43.6	49.1	55.2	40.3	45.9	51.6	57.8	41.8	47.7	53.5	59.7
75	TCG	24.9	27.0	29.9	32.0	26.5	28.2	30.7	32.5	27.9	29.0	31.3	32.8
	SHG	24.9	22.6	19.6	16.1	26.5	24.6	20.9	16.7	27.9	26.4	22.0	17.2
	TC	24.0	26.2	29.0	31.2	25.6	27.4	29.9	31.6	27.0	28.2	30.4	32.0
	kW	2.35	2.41	2.38	2.44	2.33	2.35	2.40	2.46	2.35	2.37	2.42	2.47
	CMP	1.93	1.99	1.97	2.03	1.92	1.94	1.99	2.04	1.93	1.95	2.01	2.05
	LDB	41.0	44.6	49.4	55.2	44.1	46.7	51.9	57.7	46.7	48.5	53.9	59.7
	LWB	39.3	44.5	49.4	55.1	40.9	46.5	51.7	57.6	42.2	48.1	53.5	59.4
85	TCG	24.1	26.0	28.8	31.7	25.6	27.0	29.8	32.4	26.9	27.9	30.6	32.7
	SHG	24.1	22.1	19.1	16.0	25.6	24.0	20.6	16.8	26.9	25.9	21.9	17.4
	TC	23.3	25.2	28.0	30.8	24.8	26.2	28.9	31.5	26.1	27.0	29.7	31.8
	kW	2.51	2.57	2.69	2.74	2.60	2.61	2.72	2.76	2.64	2.65	2.73	2.77
	CMP	2.10	2.16	2.27	2.33	2.18	2.19	2.30	2.34	2.22	2.24	2.31	2.35
	LDB	42.3	45.4	50.2	55.4	45.3	47.5	52.3	57.6	47.8	49.1	54.0	59.6
	LWB	40.0	45.3	50.2	55.4	41.5	47.2	52.3	57.6	42.8	48.8	53.9	59.4
95	TCG	23.2	24.9	27.7	30.6	24.7	25.8	28.6	31.6	25.9	26.6	29.0	32.3
	SHG	23.2	21.6	18.6	15.5	24.7	23.5	20.1	16.5	25.9	25.2	21.1	17.3
	TC	22.3	24.0	26.8	29.7	23.8	24.9	27.8	30.7	25.0	25.7	28.0	31.4
	kW	2.77	2.84	2.90	3.02	2.83	2.87	2.96	3.05	2.87	2.90	2.98	3.06
	CMP	2.36	2.42	2.49	2.60	2.41	2.45	2.55	2.63	2.46	2.48	2.57	2.65
	LDB	43.8	46.3	51.0	56.1	46.7	48.3	53.0	58.0	49.1	49.9	54.6	59.6
	LWB	40.8	46.2	51.0	56.1	42.2	48.0	52.9	58.0	43.5	49.5	54.5	59.6
105	TCG	22.1	23.5	26.3	29.3	23.5	24.4	27.2	30.2	24.8	25.1	27.9	30.9
	SHG	22.1	20.9	18.0	15.0	23.5	22.8	19.4	15.9	24.8	24.5	20.8	16.8
	TC	21.3	22.6	25.4	28.4	22.7	23.5	26.3	29.4	23.9	24.2	27.0	30.0
	kW	3.02	3.07	3.18	3.31	3.08	3.11	3.22	3.33	3.13	3.14	3.25	3.35
	CMP	2.61	2.66	2.77	2.90	2.66	2.70	2.80	2.92	2.71	2.73	2.84	2.94
	LDB	45.5	47.4	52.0	56.9	48.2	49.2	53.9	58.8	50.5	50.8	55.3	60.2
	LWB	41.6	47.3	52.0	56.9	43.0	48.9	53.8	58.8	44.1	50.3	55.2	60.2
115	TCG	21.1	21.9	24.8	27.8	22.3	22.8	25.6	28.6	23.5	23.6	26.2	29.3
	SHG	21.1	20.2	17.4	14.4	22.3	22.0	18.8	15.3	23.5	23.6	20.1	16.2
	TC	20.2	21.1	23.9	26.9	21.5	21.9	24.7	27.8	22.6	22.7	25.4	28.4
	kW	3.29	3.33	3.45	3.58	3.35	3.36	3.48	3.62	3.39	3.40	3.51	3.66
	CMP	2.88	2.91	3.03	3.16	2.93	2.95	3.07	3.21	2.98	2.98	3.10	3.24
	LDB	47.2	48.6	53.1	57.8	49.9	50.3	54.8	59.6	52.1	52.0	56.1	60.9
	LWB	42.5	48.4	53.0	57.8	43.9	49.9	54.7	59.6	44.9	51.1	56.0	60.9
125	TCG	19.9	20.4	23.0	26.0	21.1	21.2	23.8	26.8	22.2	22.2	24.5	27.5
	SHG	19.9	19.5	16.7	13.8	21.1	21.2	18.1	14.7	22.2	22.2	19.4	15.6
	TC	19.0	19.5	22.2	25.1	20.2	20.3	22.9	26.0	21.3	21.3	23.6	26.6
	kW	3.57	3.60	3.72	3.86	3.63	3.64	3.76	3.90	3.68	3.68	3.80	3.94
	CMP	3.16	3.18	3.30	3.45	3.22	3.22	3.34	3.49	3.27	3.27	3.38	3.52
	LDB	49.2	49.8	54.2	58.9	51.7	51.5	55.8	60.5	53.7	53.7	57.0	61.7
	LWB	43.5	49.5	54.2	58.9	44.7	50.9	55.7	60.5	45.7	51.8	56.8	61.7

LEGEND

BF — Bypass Factor
CMP — Compressor
Edb — Entering Dry Bulb
Ewb — Entering Wet Bulb
kW — Total Power
LDB — Leaving Dry Bulb
LWB — Leaving Wet Bulb
SHG — Gross Sensible Capacity (1000 Btuh
TC — Total Net Cooling Capacity (1000 Btuh)
TCG — Gross Cooling Capacity (1000 Btuh)

Rating Condition

Not recommended for long-term operation

*Click here to view Systems Index Table.

NOTES:
1. Direct interpolation is permissible. Do not extrapolate.
2. The SHG is based on 80 F edb temperature of air entering indoor coil.
   Below 80 F edb, subtract (corr factor x cfm) from SHG.
   Above 80 F edb, add (corr factor x cfm) to SHG.
   Correction Factor = 1.10 x (1 – BF) x (edb – 80).

COOLING CAPACITIES (cont)
SYSTEM 48* – 619CNX036 WITH 538JNX036

TEMP (F) AIR ENTERING CONDENSER (Edb)		AIR ENTERING EVAPORATOR — CFM/BF											
		640/0.03				740/0.03				840/0.04			
		Air Entering Evaporator — Ewb (F)											
		57	62	67	72	57	62	67	72	57	62	67	72
55	TCG	32.9	34.9	35.1	35.6	34.2	34.8	35.3	35.0	34.9	34.9	35.5	35.4
	SHG	30.1	26.2	21.3	16.7	32.3	26.7	21.7	16.5	33.9	27.4	22.2	16.9
	TC	32.1	34.2	34.4	34.9	33.4	33.9	34.5	34.1	33.9	33.9	34.5	34.4
	kW	2.37	2.44	2.44	2.46	2.45	2.47	2.49	2.48	2.51	2.51	2.53	2.53
	CMP	2.03	2.09	2.09	2.11	2.07	2.08	2.10	2.09	2.09	2.09	2.11	2.10
	LDB	34.0	40.0	47.7	55.0	37.3	44.9	51.8	58.8	40.6	48.5	54.7	61.0
	LWB	33.0	38.8	46.3	53.5	35.9	42.8	49.6	56.8	38.5	45.5	52.0	58.8
65	TCG	31.4	34.9	37.1	37.5	33.2	36.4	37.2	38.5	34.6	36.9	37.4	38.4
	SHG	29.4	26.5	22.7	18.0	32.1	28.5	23.1	18.8	34.4	29.7	23.7	18.8
	TC	30.7	34.1	36.4	36.8	32.3	35.5	36.4	37.7	33.7	36.0	36.5	37.5
	kW	2.58	2.65	2.72	2.73	2.65	2.73	2.76	2.81	2.73	2.78	2.80	2.84
	CMP	2.23	2.30	2.37	2.38	2.27	2.35	2.37	2.42	2.31	2.36	2.38	2.42
	LDB	35.1	39.7	45.7	52.9	37.7	42.6	49.8	55.8	40.1	45.7	53.0	58.7
	LWB	34.3	38.9	44.8	52.2	36.7	41.6	48.5	54.9	38.7	44.2	51.0	57.4
75	TCG	28.4	33.2	36.8	38.8	30.6	35.0	38.3	38.8	33.0	36.3	38.8	40.0
	SHG	27.6	25.7	22.6	18.6	30.6	27.7	24.0	18.9	33.0	29.7	24.9	19.6
	TC	27.6	32.4	36.1	38.1	29.7	34.1	37.4	38.0	32.1	35.3	37.8	39.1
	kW	2.78	2.85	2.95	3.01	2.85	2.94	3.04	3.05	2.92	3.01	3.08	3.14
	CMP	2.43	2.50	2.60	2.66	2.47	2.55	2.65	2.66	2.50	2.58	2.66	2.71
	LDB	37.9	41.0	45.8	52.0	39.8	43.5	48.7	55.6	41.7	45.7	51.5	57.7
	LWB	37.0	40.3	45.1	51.3	38.6	42.7	47.8	54.8	39.7	44.6	50.3	56.7
85	TCG	26.0	30.6	35.0	38.6	28.7	32.4	36.7	39.9	30.8	34.3	38.0	40.5
	SHG	26.0	24.3	21.7	18.5	28.7	26.5	23.3	19.4	30.8	28.9	24.7	19.9
	TC	25.4	29.9	34.3	37.9	27.8	31.6	35.8	39.0	29.9	33.4	36.9	39.5
	kW	2.97	3.05	3.16	3.27	3.05	3.14	3.25	3.35	3.14	3.20	3.32	3.41
	CMP	2.62	2.70	2.81	2.92	2.67	2.76	2.86	2.96	2.71	2.78	2.89	2.98
	LDB	40.3	43.1	47.1	52.1	42.3	45.2	49.6	55.0	44.3	46.8	51.7	57.4
	LWB	38.9	42.3	46.4	51.5	40.0	44.4	48.8	54.2	41.0	45.8	50.7	56.5
95	TCG	24.3	27.4	32.6	36.8	26.4	29.6	34.6	38.4	28.7	31.4	33.0	39.3
	SHG	24.3	22.7	20.6	17.8	26.4	25.1	22.4	18.8	28.7	27.4	21.9	19.6
	TC	23.5	26.7	31.9	36.1	25.6	28.8	33.7	37.5	27.7	30.4	32.0	38.4
	kW	3.18	3.27	3.37	3.50	3.27	3.34	3.45	3.58	3.35	3.40	3.53	3.65
	CMP	2.83	2.92	3.01	3.15	2.89	2.95	3.06	3.19	2.93	2.98	3.11	3.22
	LDB	43.1	45.6	48.9	53.4	45.3	47.1	50.9	55.8	46.9	48.4	52.7	57.9
	LWB	40.4	44.8	48.2	52.7	41.6	46.2	50.0	55.0	42.4	47.4	51.8	57.0
105	TCG	22.7	25.2	29.5	34.9	25.0	26.5	31.9	36.3	26.5	28.1	33.7	37.4
	SHG	22.7	21.6	19.2	16.9	25.0	23.7	21.2	17.9	26.5	25.9	22.9	18.8
	TC	22.0	24.5	28.8	34.1	24.2	25.7	31.0	35.4	25.6	27.2	32.7	36.5
	kW	3.38	3.45	3.58	3.69	3.47	3.53	3.65	3.80	3.57	3.60	3.72	3.88
	CMP	3.03	3.10	3.22	3.33	3.08	3.15	3.26	3.40	3.15	3.17	3.29	3.45
	LDB	45.5	47.3	51.1	54.7	47.3	49.1	52.5	57.0	49.5	50.2	53.8	58.7
	LWB	41.6	46.5	50.3	54.0	42.6	48.1	51.6	56.2	43.7	49.2	52.9	57.9
115	TCG	21.3	23.4	27.3	32.1	23.5	24.4	28.6	34.1	25.0	26.1	30.4	35.2
	SHG	21.3	20.8	18.1	15.8	23.5	22.7	19.7	17.0	25.0	25.0	21.5	18.0
	TC	20.6	22.7	26.5	31.3	22.7	23.6	27.7	33.3	24.1	25.1	29.3	34.2
	kW	3.57	3.62	3.76	3.91	3.66	3.70	3.85	3.98	3.76	3.77	3.92	4.07
	CMP	3.22	3.26	3.41	3.55	3.27	3.32	3.46	3.59	3.33	3.34	3.49	3.64
	LDB	47.7	48.7	52.7	56.5	49.3	50.4	54.4	58.1	51.3	51.4	55.5	59.8
	LWB	42.8	47.8	51.9	55.7	43.6	49.3	53.5	57.3	44.5	50.2	54.5	58.9
125	TCG	20.1	21.5	25.3	29.4	22.0	22.3	26.1	30.9	23.4	23.3	27.2	32.7
	SHG	20.1	19.8	17.3	14.8	22.0	21.7	18.8	15.8	23.4	23.3	20.2	17.0
	TC	19.4	20.8	24.5	28.7	21.2	21.4	25.3	30.1	22.4	22.4	26.1	31.7
	kW	3.75	3.78	3.93	4.10	3.85	3.87	4.03	4.19	3.96	3.96	4.11	4.26
	CMP	3.40	3.43	3.58	3.74	3.46	3.48	3.64	3.80	3.53	3.53	3.68	3.83
	LDB	49.6	50.1	54.0	58.1	51.4	51.8	55.8	59.8	53.3	53.3	57.0	60.9
	LWB	43.7	49.1	53.2	57.3	44.6	50.7	54.8	58.9	45.5	51.7	56.0	60.0

LEGEND

BF — Bypass Factor
CMP — Compressor
Edb — Entering Dry Bulb
Ewb — Entering Wet Bulb
kW — Total Power
LDB — Leaving Dry Bulb
LWB — Leaving Wet Bulb
SHG — Gross Sensible Capacity (1000 Btuh)
TC — Total Net Cooling Capacity (1000 Btuh)
TCG — Gross Cooling Capacity (1000 Btuh

Rating Condition

Not recommended for long-term operation

*Click here to view Systems Index Table.

NOTES:
1. Direct interpolation is permissible. Do not extrapolate.
2. The SHG is based on 80 F edb temperature of air entering indoor coil.
   Below 80 F edb, subtract (corr factor x cfm) from SHG.
   Above 80 F edb, add (corr factor x cfm) to SHG.
   Correction Factor = 1.10 x (1 – BF) x (edb – 80).

COOLING CAPACITIES (cont)
SYSTEM 49* – 619CNX048 WITH 538JNX048

TEMP (F) AIR ENTERING CONDENSER (Edb)		AIR ENTERING EVAPORATOR — CFM/BF											
		1100/0.05				1160/0.05				1200/0.06			
		Air Entering Evaporator — Ewb (F)											
		57	62	67	72	57	62	67	72	57	62	67	72
55	TCG	44.9	48.7	52.1	54.5	45.9	49.3	52.4	54.8	46.4	49.6	52.7	54.9
	SHG	44.9	39.8	33.7	27.4	45.9	40.8	34.3	27.6	46.4	41.5	34.7	27.8
	TC	43.6	47.4	50.7	53.2	44.5	48.0	51.1	53.5	45.1	48.3	51.3	53.6
	kW	3.01	3.07	3.14	3.18	3.02	3.09	3.15	3.19	3.03	3.09	3.15	3.19
	CMP	2.33	2.40	2.46	2.51	2.34	2.41	2.47	2.51	2.35	2.42	2.48	2.51
	LDB	38.9	43.7	49.4	55.4	40.2	44.6	50.4	56.4	41.0	45.2	51.1	57.1
	LWB	38.2	43.4	49.1	55.3	38.9	44.3	50.0	56.2	39.3	44.9	50.6	56.8
65	TCG	43.5	47.4	51.6	54.7	44.4	48.0	52.1	55.1	45.1	48.4	52.4	55.3
	SHG	43.5	39.2	33.7	27.5	44.4	40.3	34.4	27.9	45.1	41.0	34.8	28.1
	TC	42.2	46.0	50.3	53.4	43.1	46.7	50.8	53.7	43.7	47.1	51.0	54.0
	kW	3.35	3.37	3.45	3.51	3.37	3.38	3.46	3.52	3.36	3.39	3.46	3.52
	CMP	2.67	2.69	2.77	2.83	2.69	2.70	2.78	2.84	2.69	2.71	2.78	2.84
	LDB	40.2	44.2	49.4	55.2	41.4	45.1	50.4	56.2	42.2	45.6	51.0	56.8
	LWB	38.9	44.0	49.3	55.2	39.5	44.8	50.2	56.1	39.9	45.3	50.7	56.7
75	TCG	42.2	45.6	50.3	54.2	43.1	46.3	50.9	54.6	43.7	46.7	51.3	54.9
	SHG	42.2	38.3	33.1	27.3	43.1	39.5	33.9	27.8	43.7	40.2	34.5	28.0
	TC	40.9	44.3	49.0	52.9	41.8	45.0	49.6	53.3	42.4	45.4	49.9	53.5
	kW	3.65	3.74	3.79	3.86	3.68	3.74	3.80	3.87	3.69	3.73	3.81	3.88
	CMP	2.97	3.06	3.11	3.18	3.00	3.06	3.12	3.19	3.02	3.06	3.13	3.20
	LDB	41.4	45.0	49.9	55.4	42.6	45.8	50.7	56.3	43.4	46.3	51.3	56.9
	LWB	39.5	44.8	49.8	55.4	40.2	45.6	50.6	56.3	40.6	46.1	51.2	56.8
85	TCG	40.8	43.8	48.6	53.0	41.7	44.4	49.1	53.5	42.3	44.7	49.5	53.8
	SHG	40.8	37.5	32.4	26.9	41.7	38.6	33.2	27.4	42.3	39.3	33.8	27.7
	TC	39.5	42.5	47.2	51.7	40.4	43.1	47.8	52.2	41.0	43.4	48.2	52.5
	kW	3.99	4.09	4.18	4.25	4.02	4.10	4.18	4.26	4.04	4.11	4.19	4.26
	CMP	3.31	3.41	3.50	3.57	3.34	3.43	3.50	3.58	3.36	3.44	3.51	3.58
	LDB	42.7	45.8	50.6	55.8	43.8	46.6	51.4	56.7	44.6	47.1	51.9	57.2
	LWB	40.2	45.6	50.6	55.8	40.8	46.4	51.3	56.7	41.2	46.8	51.8	57.2
95	TCG	39.3	41.7	46.5	51.4	40.2	42.3	47.1	51.9	40.7	42.7	45.5	52.1
	SHG	39.3	36.5	31.5	26.2	40.2	37.6	32.3	26.7	40.7	38.3	31.5	27.0
	TC	38.0	40.4	45.2	50.0	38.9	41.0	45.8	50.5	39.4	41.3	44.0	50.8
	kW	4.36	4.45	4.60	4.67	4.39	4.47	4.61	4.68	4.41	4.48	4.61	4.68
	CMP	3.68	3.77	3.92	3.99	3.72	3.79	3.93	4.00	3.73	3.80	3.93	4.00
	LDB	44.2	46.8	51.4	56.5	45.2	47.5	52.2	57.2	46.0	48.0	52.6	57.7
	LWB	41.0	46.6	51.4	56.5	41.5	47.2	52.1	57.2	41.9	47.7	52.6	57.7
105	TCG	37.7	39.6	44.1	49.3	38.4	40.1	44.7	49.8	38.9	40.5	45.1	50.1
	SHG	37.7	35.5	30.5	25.4	38.4	36.6	31.3	25.9	38.9	37.3	31.9	26.3
	TC	36.3	38.2	42.8	48.0	37.1	38.8	43.4	48.5	37.6	39.1	43.7	48.8
	kW	4.78	4.84	5.01	5.13	4.80	4.86	5.03	5.13	4.82	4.88	5.04	5.14
	CMP	4.10	4.16	4.33	4.45	4.12	4.19	4.35	4.46	4.14	4.20	4.37	4.46
	LDB	45.7	47.7	52.4	57.2	46.8	48.4	53.1	57.9	47.5	48.8	53.5	58.4
	LWB	41.8	47.5	52.3	57.2	42.3	48.2	53.0	57.9	42.6	48.5	53.4	58.4
115	TCG	35.9	37.3	41.7	46.8	36.7	37.8	42.3	47.3	37.2	38.1	42.6	47.7
	SHG	35.9	34.4	29.5	24.4	36.7	35.5	30.3	25.0	37.2	36.2	30.9	25.3
	TC	34.5	35.9	40.4	45.5	35.3	36.5	41.0	46.0	35.8	36.8	41.3	46.4
	kW	5.22	5.27	5.45	5.66	5.25	5.30	5.47	5.66	5.27	5.31	5.48	5.66
	CMP	4.54	4.60	4.77	4.98	4.57	4.62	4.79	4.98	4.59	4.63	4.81	4.99
	LDB	47.4	48.8	53.3	58.1	48.4	49.4	54.0	58.8	49.0	49.8	54.4	59.2
	LWB	42.6	48.5	53.3	58.1	43.1	49.1	53.9	58.8	43.4	49.4	54.3	59.2
125	TCG	34.0	34.8	39.2	44.2	34.7	35.2	39.7	44.7	35.2	35.5	40.0	45.1
	SHG	34.0	33.3	28.4	23.4	34.7	34.3	29.2	24.0	35.2	35.0	29.8	24.4
	TC	32.7	33.4	37.9	42.8	33.4	33.9	38.3	43.4	33.9	34.2	38.6	43.7
	kW	5.70	5.74	5.92	6.16	5.73	5.75	5.94	6.19	5.75	5.77	5.96	6.21
	CMP	5.02	5.06	5.24	5.48	5.06	5.08	5.27	5.51	5.07	5.09	5.28	5.53
	LDB	49.2	49.9	54.3	59.0	50.1	50.5	54.9	59.6	50.7	50.9	55.3	60.0
	LWB	43.5	49.6	54.3	59.0	44.0	50.1	54.8	59.6	44.3	50.4	55.2	60.0

LEGEND

BF — Bypass Factor
CMP — Compressor
Edb — Entering Dry Bulb
Ewb — Entering Wet Bulb
kW — Total Power
LDB — Leaving Dry Bulb
LWB — Leaving Wet Bulb
SHG — Gross Sensible Capacity (1000 Btuh)
TC — Total Net Cooling Capacity (1000 Btuh)
TCG — Gross Cooling Capacity (1000 Btuh)

Rating Condition

Not recommended for long-term operation

*Click here to view Systems Index Table.

NOTES:
1. Direct interpolation is permissible. Do not extrapolate.
2. The SHG is based on 80 F edb temperature of air entering indoor coil.
   Below 80 F edb, subtract (corr factor x cfm) from SHG.
   Above 80 F edb, add (corr factor x cfm) to SHG.
   Correction Factor = 1.10 x (1 – BF) x (edb – 80).

COOLING CAPACITIES (cont)
SYSTEM 50* – 619CNX060 WITH 538JNX060

TEMP (F) AIR ENTERING CONDENSER (Edb)		AIR ENTERING EVAPORATOR — CFM/BF											
		1040/0.03				1220/0.04				1600/0.06			
		Air Entering Evaporator — Ewb (F)											
		57	62	67	72	57	62	67	72	57	62	67	72
55	TCG	55.5	61.2	66.0	68.7	58.9	63.9	67.3	69.3	64.7	66.4	68.5	70.9
	SHG	52.9	47.5	41.2	33.7	58.2	51.4	43.2	34.6	64.7	57.7	46.4	30.3
	TC	53.5	59.2	64.1	66.7	56.9	61.9	65.3	67.4	62.7	64.5	66.6	69.0
	kW	4.05	4.10	4.21	4.27	4.06	4.17	4.24	4.29	4.19	4.23	4.28	4.33
	CMP	3.16	3.22	3.33	3.39	3.18	3.29	3.36	3.41	3.31	3.35	3.40	3.45
	LDB	34.6	39.3	44.8	51.5	37.3	42.4	48.5	55.0	43.8	47.7	54.2	63.2
	LWB	34.5	39.3	44.8	51.5	37.0	42.3	48.3	54.9	40.7	47.0	53.1	59.3
65	TCG	53.6	58.9	65.2	69.9	56.7	62.0	67.7	71.0	63.4	66.2	69.9	72.2
	SHG	51.8	46.2	40.8	34.2	56.7	50.5	43.6	35.5	63.4	58.4	48.1	37.5
	TC	51.7	56.9	63.2	67.9	54.7	60.0	65.7	69.0	61.4	64.2	67.9	70.2
	kW	4.38	4.50	4.59	4.70	4.47	4.53	4.65	4.73	4.56	4.62	4.70	4.76
	CMP	3.50	3.62	3.71	3.81	3.59	3.65	3.77	3.85	3.68	3.74	3.82	3.88
	LDB	35.6	40.4	45.2	51.0	38.5	43.0	48.2	54.4	44.5	47.3	53.3	59.4
	LWB	35.5	40.4	45.2	51.0	37.9	43.0	48.2	54.4	41.1	47.0	52.8	59.0
75	TCG	51.7	56.7	63.0	69.2	55.0	59.3	65.9	71.3	61.3	63.9	69.5	73.0
	SHG	50.7	45.1	39.7	33.9	55.0	49.2	42.8	35.6	61.3	57.5	48.5	38.2
	TC	49.7	54.7	61.0	67.3	53.0	57.4	63.9	69.3	59.4	61.9	67.5	71.1
	kW	4.72	4.89	5.02	5.14	4.84	4.98	5.07	5.19	5.00	5.04	5.15	5.23
	CMP	3.84	4.01	4.14	4.26	3.96	4.10	4.19	4.31	4.12	4.16	4.27	4.35
	LDB	36.6	41.4	46.1	51.3	39.8	44.0	48.8	54.3	45.7	47.9	53.0	59.0
	LWB	36.4	41.4	46.1	51.3	38.6	44.0	48.8	54.3	41.7	47.6	52.9	58.8
85	TCG	49.6	54.5	60.4	67.2	53.1	57.0	63.3	69.8	59.2	61.0	67.3	72.5
	SHG	49.5	44.0	38.5	33.1	53.1	48.1	41.7	35.0	59.2	56.1	47.7	38.3
	TC	47.7	52.5	58.4	65.2	51.2	55.1	61.3	67.8	57.2	59.1	65.4	70.6
	kW	5.13	5.28	5.49	5.62	5.24	5.38	5.55	5.67	5.46	5.52	5.62	5.73
	CMP	4.25	4.40	4.61	4.74	4.36	4.50	4.67	4.79	4.58	4.64	4.74	4.85
	LDB	37.6	42.4	47.2	52.0	41.2	44.9	49.7	54.8	46.9	48.7	53.5	58.9
	LWB	37.4	42.4	47.2	52.0	39.4	44.8	49.7	54.8	42.4	48.4	53.4	58.9
95	TCG	47.7	52.1	57.8	64.5	51.2	54.5	60.4	67.3	56.9	58.2	58.5	70.8
	SHG	47.7	42.8	37.3	31.9	51.2	46.9	40.4	34.0	56.9	54.8	42.3	37.7
	TC	45.8	50.1	55.9	62.6	49.2	52.5	58.5	65.4	55.0	56.3	56.6	68.8
	kW	5.59	5.73	5.93	6.15	5.70	5.82	6.03	6.20	5.91	5.96	6.15	6.26
	CMP	4.71	4.85	5.05	5.27	4.82	4.94	5.15	5.31	5.03	5.08	5.27	5.38
	LDB	39.2	43.4	48.2	53.0	42.7	45.8	50.6	55.5	48.2	49.4	54.2	59.3
	LWB	38.4	43.4	48.2	53.0	40.2	45.7	50.6	55.5	43.0	49.1	54.1	59.3
105	TCG	45.9	49.5	55.1	61.5	49.1	51.7	57.5	64.2	54.6	55.3	61.0	68.0
	SHG	45.9	41.6	36.1	30.6	49.1	45.6	39.2	32.7	54.6	53.5	45.1	36.7
	TC	43.9	47.6	53.1	59.5	47.1	49.8	55.6	62.2	52.6	53.3	59.0	66.0
	kW	6.09	6.23	6.43	6.68	6.22	6.31	6.53	6.80	6.42	6.45	6.67	6.84
	CMP	5.21	5.35	5.55	5.80	5.34	5.42	5.65	5.92	5.54	5.57	5.79	5.96
	LDB	40.9	44.5	49.3	54.2	44.2	46.8	51.6	56.5	49.6	50.2	55.0	59.8
	LWB	39.2	44.5	49.3	54.2	41.0	46.7	51.6	56.5	43.7	49.9	54.9	59.8
115	TCG	43.8	46.9	52.3	58.6	47.0	48.9	54.5	61.0	52.2	52.4	57.8	64.4
	SHG	43.8	40.3	34.9	29.5	47.0	44.3	37.9	31.5	52.2	52.0	43.8	35.3
	TC	41.8	44.9	50.4	56.6	45.0	46.9	52.6	59.0	50.2	50.4	55.8	62.5
	kW	6.64	6.77	6.98	7.24	6.77	6.85	7.07	7.36	6.99	7.00	7.21	7.49
	CMP	5.76	5.89	6.10	6.36	5.89	5.96	6.19	6.48	6.11	6.12	6.33	6.61
	LDB	42.7	45.7	50.4	55.2	45.9	47.8	52.5	57.4	50.9	51.1	55.7	60.6
	LWB	40.2	45.7	50.4	55.2	41.8	47.7	52.5	57.4	44.4	50.6	55.6	60.6
125	TCG	41.6	43.9	49.3	55.5	44.6	45.8	51.3	57.7	49.6	49.6	54.4	61.0
	SHG	41.6	39.0	33.6	28.2	44.6	42.9	36.6	30.2	49.6	49.6	42.5	34.1
	TC	39.6	41.9	47.4	53.6	42.6	43.9	49.3	55.8	47.6	47.6	52.4	59.0
	kW	7.22	7.33	7.57	7.85	7.36	7.42	7.66	7.97	7.59	7.59	7.80	8.14
	CMP	6.34	6.45	6.69	6.97	6.48	6.54	6.78	7.09	6.71	6.71	6.92	7.26
	LDB	44.7	46.9	51.6	56.3	47.7	48.9	53.6	58.3	52.5	52.5	56.5	61.3
	LWB	41.2	46.9	51.6	56.3	42.7	48.8	53.6	58.3	45.1	51.3	56.4	61.3

LEGEND

BF — Bypass Factor
CMP — Compressor
Edb — Entering Dry Bulb
Ewb — Entering Wet Bulb
kW — Total Power
LDB — Leaving Dry Bulb
LWB — Leaving Wet Bulb
SHG — Gross Sensible Capacity (1000 Btuh)
TC — Total Net Cooling Capacity (1000 Btuh)
TCG — Gross Cooling Capacity (1000 Btuh)

Rating Condition

Not recommended for long-term operation

*Click here to view Systems Index Table.

NOTES:
1. Direct interpolation is permissible. Do not extrapolate.
2. The SHG is based on 80 F edb temperature of air entering indoor coil.
   Below 80 F edb, subtract (corr factor x cfm) from SHG.
   Above 80 F edb, add (corr factor x cfm) to SHG.
   Correction Factor = 1.10 x (1 – BF) x (edb – 80).

COOLING CAPACITIES (cont)
SYSTEM 51* – 619FNX024 WITH 538JNX018

TEMP (F) AIR ENTERING CONDENSER (Edb)		AIR ENTERING EVAPORATOR — CFM/BF											
		375/0.03				415/0.03				525/0.05			
		Air Entering Evaporator — Ewb (F)											
		57	62	67	72	57	62	67	72	57	62	67	72
55	TCG	16.1	16.9	17.7	18.4	16.4	17.2	17.9	18.6	17.2	17.6	18.2	18.6
	SHG	15.5	13.4	11.2	9.2	16.2	13.9	11.5	9.4	17.2	15.0	12.2	9.0
	TC	15.8	16.6	17.4	18.1	16.1	16.9	17.6	18.3	16.9	17.3	17.9	18.3
	kW	1.13	1.14	1.15	1.16	1.14	1.15	1.16	1.16	1.15	1.15	1.16	1.16
	CMP	0.918	0.928	0.939	0.947	0.922	0.932	0.942	0.950	0.932	0.938	0.946	0.950
	LDB	36.4	42.5	48.7	54.7	38.8	44.9	51.1	56.7	45.6	49.9	55.8	62.3
	LWB	36.0	42.0	48.2	54.6	37.9	43.9	50.2	56.4	41.7	47.9	53.9	60.1
65	TCG	15.8	16.9	17.9	18.7	16.3	17.2	18.1	18.8	17.3	17.7	18.5	19.2
	SHG	15.4	13.5	11.4	9.3	16.3	14.1	11.7	9.5	17.3	15.5	12.5	9.9
	TC	15.5	16.6	17.6	18.4	16.0	16.9	17.8	18.5	17.0	17.4	18.2	18.9
	kW	1.23	1.25	1.26	1.27	1.24	1.25	1.26	1.28	1.25	1.26	1.27	1.28
	CMP	1.02	1.03	1.05	1.06	1.02	1.04	1.05	1.06	1.04	1.04	1.06	1.07
	LDB	36.7	42.2	48.3	54.4	38.7	44.4	50.5	56.4	45.4	49.1	55.1	60.5
	LWB	36.4	42.0	48.0	54.3	38.1	43.9	49.9	56.2	41.6	47.8	53.7	59.7
75	TCG	15.3	16.6	17.8	18.8	15.9	17.0	18.1	18.9	17.2	17.6	18.5	19.3
	SHG	15.2	13.4	11.4	9.4	15.9	14.1	11.8	9.6	17.2	15.7	12.8	10.0
	TC	15.0	16.3	17.5	18.5	15.6	16.7	17.8	18.6	16.9	17.3	18.2	19.0
	kW	1.35	1.36	1.38	1.40	1.35	1.37	1.38	1.40	1.37	1.38	1.39	1.41
	CMP	1.13	1.15	1.17	1.18	1.14	1.15	1.17	1.19	1.15	1.16	1.18	1.19
	LDB	37.5	42.5	48.2	54.2	39.7	44.4	50.3	56.2	45.6	48.7	54.6	60.3
	LWB	37.2	42.4	48.1	54.2	38.6	44.2	50.0	56.1	41.7	47.8	53.7	59.6
85	TCG	14.7	16.1	17.5	18.7	15.4	16.5	17.8	18.9	16.9	17.4	18.4	19.2
	SHG	14.7	13.2	11.3	9.3	15.4	13.9	11.8	9.6	16.9	15.7	12.9	10.1
	TC	14.4	15.8	17.2	18.4	15.1	16.2	17.5	18.6	16.6	17.1	18.1	18.9
	kW	1.48	1.49	1.51	1.54	1.49	1.50	1.52	1.54	1.50	1.51	1.53	1.55
	CMP	1.27	1.28	1.30	1.32	1.27	1.28	1.30	1.32	1.29	1.29	1.32	1.33
	LDB	38.7	43.2	48.5	54.4	41.0	44.8	50.3	56.2	46.2	48.5	54.4	60.2
	LWB	38.1	43.2	48.5	54.4	39.3	44.7	50.2	56.2	42.0	48.1	53.8	59.7
95	TCG	14.2	15.4	17.1	18.4	14.8	15.9	17.5	18.6	16.3	16.8	17.8	19.0
	SHG	14.2	12.8	11.1	9.2	14.8	13.6	11.7	9.5	16.3	15.5	12.7	10.1
	TC	13.9	15.1	16.8	18.1	14.5	15.6	17.2	18.3	16.0	16.5	17.5	18.7
	kW	1.62	1.65	1.66	1.69	1.64	1.65	1.67	1.70	1.65	1.66	1.68	1.71
	CMP	1.41	1.43	1.45	1.48	1.43	1.43	1.45	1.48	1.44	1.44	1.47	1.49
	LDB	40.3	44.1	49.0	54.7	42.4	45.6	50.6	56.4	47.3	48.9	54.3	60.2
	LWB	38.9	44.1	49.0	54.7	40.1	45.6	50.6	56.4	42.5	48.6	54.0	59.8
105	TCG	13.6	14.7	16.4	18.0	14.3	15.1	16.8	18.3	15.7	16.1	17.6	18.7
	SHG	13.6	12.5	10.8	9.1	14.3	13.2	11.4	9.4	15.7	15.2	12.8	10.0
	TC	13.3	14.4	16.1	17.7	14.0	14.8	16.5	18.0	15.4	15.8	17.3	18.4
	kW	1.77	1.81	1.83	1.86	1.79	1.82	1.84	1.87	1.83	1.83	1.85	1.89
	CMP	1.56	1.60	1.62	1.65	1.58	1.61	1.62	1.66	1.61	1.62	1.64	1.67
	LDB	41.9	45.1	49.9	55.1	43.9	46.6	51.4	56.7	48.5	49.5	54.6	60.3
	LWB	39.8	45.1	49.9	55.1	40.8	46.5	51.3	56.7	43.1	49.3	54.4	60.1
115	TCG	13.1	13.9	15.7	17.4	13.7	14.4	16.1	17.8	15.1	15.3	16.9	18.3
	SHG	13.1	12.1	10.5	8.8	13.7	12.9	11.1	9.1	15.1	14.9	12.5	10.0
	TC	12.8	13.6	15.4	17.1	13.4	14.1	15.8	17.5	14.8	15.0	16.6	18.0
	kW	1.94	1.97	2.03	2.05	1.96	1.99	2.03	2.06	2.03	2.03	2.05	2.08
	CMP	1.73	1.75	1.82	1.84	1.75	1.77	1.82	1.85	1.81	1.81	1.83	1.86
	LDB	43.4	46.2	50.8	55.8	45.4	47.5	52.2	57.3	49.8	50.3	55.1	60.4
	LWB	40.6	46.2	50.8	55.8	41.6	47.4	52.2	57.3	43.8	50.0	55.0	60.3
125	TCG	12.5	13.2	14.8	16.7	13.1	13.6	15.3	17.0	14.4	14.5	16.0	17.7
	SHG	12.5	11.8	10.2	8.5	13.1	12.5	10.7	8.9	14.4	14.5	12.2	9.8
	TC	12.2	12.9	14.5	16.4	12.8	13.3	15.0	16.7	14.1	14.2	15.7	17.4
	kW	2.14	2.16	2.23	2.27	2.16	2.18	2.25	2.28	2.22	2.22	2.27	2.29
	CMP	1.92	1.95	2.02	2.06	1.94	1.96	2.04	2.06	2.00	2.00	2.05	2.08
	LDB	45.1	47.2	51.8	56.6	47.0	48.4	53.1	58.0	51.1	51.1	55.7	60.8
	LWB	41.4	47.2	51.8	56.6	42.4	48.3	53.1	58.0	44.5	50.7	55.7	60.8

LEGEND

BF — Bypass Factor
CMP — Compressor
Edb — Entering Dry Bulb
Ewb — Entering Wet Bulb
kW — Total Power
LDB — Leaving Dry Bulb
LWB — Leaving Wet Bulb
SHG — Gross Sensible Capacity (1000 Btuh)
TC — Total Net Cooling Capacity (1000 Btuh)
TCG — Gross Cooling Capacity (1000 Btuh)

Rating Condition

Not recommended for long-term operation

*Click here to view Systems Index Table.

NOTES:
1. Direct interpolation is permissible. Do not extrapolate.
2. The SHG is based on 80 F edb temperature of air entering indoor coil.
   Below 80 F edb, subtract (corr factor x cfm) from SHG.
   Above 80 F edb, add (corr factor x cfm) to SHG.
   Correction Factor = 1.10 x (1 – BF) x (edb – 80).

COOLING CAPACITIES (cont)
SYSTEM 52* – 619FNX036 WITH 538JNX024

TEMP (F) AIR ENTERING CONDENSER (Edb)		AIR ENTERING EVAPORATOR — CFM/BF											
		635/0.08				745/0.10				915/0.12			
		Air Entering Evaporator — Ewb (F)											
		57	62	67	72	57	62	67	72	57	62	67	72
55	TCG	24.5	26.2	28.0	29.3	25.9	26.9	28.5	29.7	27.3	27.6	29.0	30.1
	SHG	24.5	21.9	18.4	14.8	25.9	23.6	19.3	15.3	27.3	25.7	20.6	15.9
	TC	24.0	25.6	27.4	28.8	25.4	26.4	27.9	29.2	26.7	27.1	28.4	29.6
	kW	1.35	1.36	1.38	1.40	1.36	1.37	1.39	1.40	1.38	1.38	1.39	1.41
	CMP	1.09	1.10	1.12	1.13	1.10	1.11	1.12	1.14	1.11	1.12	1.13	1.15
	LDB	41.3	45.5	51.2	57.0	45.1	48.3	54.2	59.8	50.1	51.8	57.4	62.9
	LWB	39.5	45.0	50.7	56.7	41.4	47.4	53.2	59.1	43.9	50.1	55.8	61.7
65	TCG	23.7	25.4	27.7	29.5	25.3	26.3	28.4	30.0	27.0	27.3	29.0	30.5
	SHG	23.7	21.6	18.5	15.0	25.3	23.5	19.6	15.6	27.0	26.1	21.2	16.3
	TC	23.1	24.8	27.1	28.9	24.7	25.7	27.9	29.4	26.4	26.8	28.5	29.9
	kW	1.52	1.51	1.53	1.55	1.51	1.52	1.54	1.56	1.52	1.53	1.55	1.57
	CMP	1.26	1.25	1.27	1.29	1.25	1.25	1.28	1.29	1.26	1.26	1.28	1.30
	LDB	42.6	46.0	51.1	56.8	46.0	48.4	53.8	59.5	50.4	51.4	57.0	62.5
	LWB	40.2	45.6	50.9	56.6	41.9	47.8	53.2	59.0	44.1	50.2	55.8	61.5
75	TCG	22.9	24.3	26.9	29.2	24.4	25.2	27.7	29.8	26.2	26.4	28.6	30.3
	SHG	22.9	21.1	18.2	14.9	24.4	23.1	19.5	15.6	26.2	25.8	21.4	16.5
	TC	22.4	23.7	26.3	28.6	23.8	24.7	27.2	29.2	25.6	25.9	28.0	29.8
	kW	1.67	1.69	1.70	1.72	1.69	1.69	1.70	1.73	1.69	1.70	1.71	1.74
	CMP	1.41	1.43	1.44	1.46	1.43	1.43	1.44	1.47	1.43	1.43	1.45	1.48
	LDB	43.9	46.8	51.6	56.9	47.2	49.0	53.9	59.3	51.3	51.7	56.7	62.2
	LWB	40.8	46.5	51.4	56.8	42.5	48.5	53.6	59.1	44.5	50.7	56.0	61.6
85	TCG	22.1	23.2	25.8	28.4	23.5	24.1	26.6	29.1	25.2	25.3	27.6	29.8
	SHG	22.1	20.6	17.7	14.6	23.5	22.5	19.1	15.5	25.2	25.3	21.1	16.5
	TC	21.5	22.6	25.2	27.8	22.9	23.5	26.1	28.6	24.7	24.7	27.0	29.2
	kW	1.84	1.86	1.89	1.91	1.86	1.88	1.90	1.92	1.89	1.89	1.90	1.93
	CMP	1.58	1.60	1.63	1.64	1.60	1.61	1.63	1.65	1.63	1.63	1.64	1.66
	LDB	45.2	47.6	52.4	57.3	48.5	49.8	54.5	59.5	52.4	52.3	57.0	62.2
	LWB	41.5	47.3	52.2	57.3	43.1	49.2	54.2	59.4	45.1	51.2	56.4	61.8
95	TCG	21.1	22.0	24.5	27.2	22.5	22.9	25.4	28.1	24.2	24.2	24.0	28.9
	SHG	21.1	20.0	17.1	14.2	22.5	21.9	18.6	15.1	24.2	24.2	18.9	16.4
	TC	20.6	21.4	23.9	26.7	21.9	22.3	24.8	27.5	23.6	23.6	23.4	28.3
	kW	2.01	2.03	2.09	2.12	2.05	2.06	2.11	2.13	2.09	2.09	2.12	2.14
	CMP	1.75	1.77	1.83	1.86	1.78	1.79	1.85	1.86	1.82	1.82	1.85	1.87
	LDB	46.8	48.6	53.2	58.0	49.8	50.6	55.2	60.0	53.5	53.5	57.5	62.4
	LWB	42.3	48.2	53.0	58.0	43.8	49.9	54.9	60.0	45.6	51.8	57.0	62.1
105	TCG	20.1	20.7	23.1	25.9	21.4	21.5	23.9	26.8	23.0	23.0	24.8	27.6
	SHG	20.1	19.4	16.5	13.7	21.4	21.3	18.0	14.6	23.0	23.0	20.1	16.0
	TC	19.6	20.1	22.5	25.4	20.8	20.9	23.4	26.2	22.4	22.4	24.2	27.0
	kW	2.21	2.22	2.28	2.36	2.24	2.24	2.30	2.36	2.28	2.28	2.33	2.37
	CMP	1.95	1.96	2.02	2.09	1.98	1.98	2.04	2.10	2.02	2.02	2.07	2.10
	LDB	48.4	49.5	54.2	58.8	51.3	51.5	56.0	60.7	54.9	54.9	58.1	62.8
	LWB	43.1	49.1	54.0	58.8	44.5	50.7	55.7	60.6	46.2	52.3	57.6	62.6
115	TCG	19.1	19.3	21.6	24.4	20.2	20.2	22.3	25.1	21.7	21.7	23.1	26.0
	SHG	19.1	18.8	15.9	13.1	20.2	20.2	17.4	14.0	21.7	21.7	19.4	15.4
	TC	18.5	18.7	21.0	23.8	19.7	19.7	21.7	24.6	21.2	21.2	22.6	25.4
	kW	2.42	2.42	2.49	2.57	2.45	2.45	2.51	2.60	2.50	2.50	2.53	2.62
	CMP	2.15	2.16	2.23	2.30	2.19	2.19	2.25	2.33	2.23	2.23	2.27	2.36
	LDB	50.1	50.6	55.1	59.8	52.9	52.9	56.9	61.5	56.3	56.3	58.9	63.4
	LWB	44.0	50.1	54.9	59.8	45.3	51.5	56.5	61.4	46.9	52.9	58.3	63.2
125	TCG	17.9	18.0	20.0	22.7	19.0	19.0	20.6	23.4	20.4	20.4	21.4	24.2
	SHG	17.9	18.0	15.3	12.5	19.0	19.0	16.7	13.4	20.4	20.4	18.8	14.7
	TC	17.3	17.4	19.4	22.1	18.5	18.5	20.0	22.8	19.8	19.8	20.8	23.6
	kW	2.63	2.63	2.70	2.78	2.67	2.67	2.72	2.81	2.72	2.72	2.75	2.84
	CMP	2.37	2.37	2.44	2.52	2.41	2.41	2.46	2.55	2.45	2.45	2.49	2.58
	LDB	52.0	51.9	56.2	60.8	54.6	54.6	57.8	62.4	57.8	57.8	59.6	64.1
	LWB	44.9	51.1	56.0	60.7	46.1	52.2	57.4	62.2	47.6	53.5	59.0	63.9

LEGEND

BF — Bypass Factor
CMP — Compressor
Edb — Entering Dry Bulb
Ewb — Entering Wet Bulb
kW — Total Power
LDB — Leaving Dry Bulb
LWB — Leaving Wet Bulb
SHG — Gross Sensible Capacity (1000 Btuh)
TC — Total Net Cooling Capacity (1000 Btuh)
TCG — Gross Cooling Capacity (1000 Btuh)

Rating Condition

Not recommended for long-term operation

*Click here to view Systems Index Table.

NOTES:
1. Direct interpolation is permissible. Do not extrapolate.
2. The SHG is based on 80 F edb temperature of air entering indoor coil.
   Below 80 F edb, subtract (corr factor x cfm) from SHG.
   Above 80 F edb, add (corr factor x cfm) to SHG.
   Correction Factor = 1.10 x (1 – BF) x (edb – 80).

COOLING CAPACITIES (cont)
SYSTEM 53* – 619FNX036 WITH 538JNX030

TEMP (F) AIR ENTERING CONDENSER (Edb)		AIR ENTERING EVAPORATOR — CFM/BF											
		635/0.08				745/0.10				915/0.12			
		Air Entering Evaporator — Ewb (F)											
		57	62	67	72	57	62	67	72	57	62	67	72
55	TCG	26.5	29.0	30.9	33.3	28.2	29.8	31.8	34.1	29.7	30.7	33.2	34.5
	SHG	26.5	23.2	19.7	16.5	28.2	24.8	20.9	17.2	29.7	27.2	22.6	17.7
	TC	25.9	28.5	30.3	32.8	27.7	29.3	31.2	33.6	29.1	30.1	32.6	33.9
	kW	1.81	1.85	1.89	1.95	1.83	1.86	1.93	1.99	1.86	1.89	1.93	2.02
	CMP	1.50	1.54	1.58	1.64	1.52	1.55	1.62	1.68	1.55	1.58	1.62	1.71
	LDB	37.7	43.0	48.8	54.1	41.6	46.3	51.8	57.0	47.0	49.9	55.1	60.8
	LWB	37.6	42.6	48.4	54.0	39.6	45.4	51.1	56.7	42.4	48.4	53.9	59.8
65	TCG	25.6	27.8	29.9	32.5	27.2	28.7	30.9	33.4	28.9	29.7	32.2	33.8
	SHG	25.6	22.7	19.3	16.2	27.2	24.4	20.6	17.0	28.9	26.8	22.4	17.6
	TC	25.0	27.3	29.4	32.0	26.7	28.1	30.3	32.8	28.3	29.1	31.7	33.3
	kW	1.99	2.03	2.09	2.15	2.02	2.05	2.13	2.19	2.06	2.09	2.13	2.22
	CMP	1.68	1.72	1.78	1.84	1.71	1.74	1.82	1.88	1.75	1.78	1.82	1.91
	LDB	39.1	43.9	49.4	54.6	42.9	46.9	52.2	57.3	47.9	50.3	55.3	60.8
	LWB	38.3	43.5	49.0	54.5	40.3	46.1	51.6	57.1	42.9	48.9	54.2	60.0
75	TCG	24.7	26.9	29.5	31.6	26.4	28.0	30.3	32.5	28.4	29.2	31.1	33.1
	SHG	24.7	22.2	19.2	15.9	26.4	24.2	20.4	16.7	28.4	26.9	22.1	17.5
	TC	24.1	26.3	28.9	31.0	25.8	27.4	29.7	31.9	27.9	28.6	30.6	32.6
	kW	2.22	2.25	2.30	2.37	2.25	2.27	2.32	2.40	2.28	2.30	2.35	2.43
	CMP	1.91	1.94	1.99	2.06	1.94	1.96	2.01	2.09	1.97	1.99	2.04	2.12
	LDB	40.6	44.6	49.5	55.1	44.0	47.1	52.4	57.7	48.4	50.1	55.6	61.0
	LWB	39.1	44.3	49.4	55.1	40.9	46.6	51.9	57.5	43.1	49.2	54.7	60.3
85	TCG	23.9	25.7	28.5	31.1	25.5	26.8	29.6	31.8	27.5	28.1	30.6	32.6
	SHG	23.9	21.7	18.8	15.7	25.5	23.7	20.3	16.4	27.5	26.5	22.2	17.4
	TC	23.3	25.2	28.0	30.6	24.9	26.3	29.0	31.2	27.0	27.5	30.1	32.0
	kW	2.43	2.49	2.55	2.60	2.48	2.53	2.57	2.63	2.53	2.54	2.59	2.66
	CMP	2.12	2.18	2.24	2.29	2.17	2.22	2.26	2.31	2.22	2.23	2.28	2.35
	LDB	41.9	45.5	50.2	55.4	45.3	47.8	52.6	58.0	49.5	50.6	55.6	61.0
	LWB	39.8	45.2	50.0	55.4	41.6	47.3	52.3	57.9	43.6	49.7	54.9	60.5
95	TCG	23.0	24.5	27.3	30.3	24.5	25.6	28.4	31.2	26.5	26.8	29.0	32.0
	SHG	23.0	21.1	18.3	15.3	24.5	23.1	19.8	16.3	26.5	25.9	21.5	17.4
	TC	22.4	24.0	26.8	29.7	24.0	25.0	27.9	30.6	25.9	26.3	28.4	31.5
	kW	2.67	2.72	2.83	2.88	2.72	2.76	2.85	2.90	2.79	2.81	2.87	2.93
	CMP	2.35	2.41	2.52	2.57	2.41	2.45	2.54	2.59	2.48	2.50	2.56	2.62
	LDB	43.4	46.4	51.1	55.9	46.6	48.6	53.3	58.2	50.6	51.3	55.9	61.0
	LWB	40.6	46.1	50.9	55.9	42.2	48.1	53.0	58.2	44.2	50.3	55.4	60.8
105	TCG	22.0	23.3	26.0	29.0	23.5	24.2	27.0	30.0	25.3	25.4	28.1	31.0
	SHG	22.0	20.5	17.7	14.8	23.5	22.5	19.2	15.8	25.3	25.2	21.3	17.1
	TC	21.4	22.7	25.4	28.4	22.9	23.6	26.4	29.5	24.8	24.9	27.5	30.5
	kW	2.92	2.97	3.08	3.19	2.98	3.01	3.12	3.20	3.06	3.06	3.17	3.22
	CMP	2.61	2.66	2.77	2.87	2.67	2.70	2.81	2.89	2.75	2.75	2.86	2.91
	LDB	45.0	47.4	52.0	56.7	48.1	49.5	54.1	58.8	51.9	52.1	56.6	61.3
	LWB	41.4	47.0	51.8	56.7	43.0	48.9	53.8	58.8	44.8	51.0	56.1	61.2
115	TCG	20.9	21.9	24.6	27.6	22.4	22.8	25.5	28.5	24.2	24.2	26.5	29.6
	SHG	20.9	19.9	17.1	14.3	22.4	21.8	18.5	15.2	24.2	24.2	20.6	16.6
	TC	20.4	21.3	24.0	27.0	21.8	22.2	24.9	28.0	23.6	23.6	25.9	29.1
	kW	3.19	3.24	3.35	3.49	3.26	3.28	3.39	3.54	3.34	3.34	3.44	3.55
	CMP	2.88	2.93	3.04	3.18	2.95	2.97	3.08	3.23	3.03	3.03	3.13	3.24
	LDB	46.8	48.4	53.0	57.7	49.6	50.4	55.0	59.6	53.3	53.3	57.3	61.9
	LWB	42.3	48.1	52.8	57.6	43.7	49.8	54.7	59.6	45.5	51.6	56.8	61.7
125	TCG	19.7	20.3	23.0	26.0	21.1	21.2	23.8	26.9	22.9	22.9	24.8	27.9
	SHG	19.7	19.1	16.4	13.6	21.1	21.0	17.9	14.6	22.9	22.9	20.0	16.0
	TC	19.2	19.7	22.5	25.4	20.5	20.7	23.3	26.3	22.3	22.3	24.3	27.4
	kW	3.48	3.50	3.64	3.79	3.55	3.55	3.68	3.84	3.64	3.64	3.73	3.89
	CMP	3.17	3.19	3.33	3.48	3.24	3.24	3.37	3.53	3.33	3.33	3.42	3.58
	LDB	48.7	49.7	54.1	58.7	51.4	51.5	55.9	60.5	54.7	54.7	58.0	62.6
	LWB	43.2	49.3	53.9	58.6	44.6	50.8	55.6	60.4	46.2	52.3	57.5	62.4

LEGEND

BF — Bypass Factor
CMP — Compressor
Edb — Entering Dry Bulb
Ewb — Entering Wet Bulb
kW — Total Power
LDB — Leaving Dry Bulb
LWB — Leaving Wet Bulb
SHG — Gross Sensible Capacity (1000 Btuh)
TC — Total Net Cooling Capacity (1000 Btuh)
TCG — Gross Cooling Capacity (1000 Btuh)

Rating Condition

Not recommended for long-term operation

*Click here to view Systems Index Table.

NOTES:
1. Direct interpolation is permissible. Do not extrapolate.
2. The SHG is based on 80 F edb temperature of air entering indoor coil.
   Below 80 F edb, subtract (corr factor x cfm) from SHG.
   Above 80 F edb, add (corr factor x cfm) to SHG.
   Correction Factor = 1.10 x (1 – BF) x (edb – 80).

COOLING CAPACITIES (cont)
SYSTEM 54* – 619FNX036 WITH 538JNX036

TEMP (F) AIR ENTERING CONDENSER (Edb)		AIR ENTERING EVAPORATOR — CFM/BF											
		635/0.02				745/0.03				915/0.04			
		Air Entering Evaporator — Ewb (F)											
		57	62	67	72	57	62	67	72	57	62	67	72
55	TCG	32.4	34.8	35.3	35.7	33.9	35.1	35.4	35.3	35.1	35.3	35.8	**35.6**
	SHG	29.5	25.9	21.4	17.2	32.0	26.8	21.7	17.5	34.2	27.5	22.2	17.1
	TC	32.0	34.3	34.8	35.3	33.5	34.6	35.0	34.7	34.4	34.6	35.1	35.0
	kW	2.29	2.35	2.36	2.38	2.35	2.38	2.40	2.39	2.42	2.43	2.45	2.44
	CMP	2.03	2.08	2.10	2.11	2.06	2.09	2.11	2.10	2.09	2.10	2.11	2.11
	LDB	34.1	39.7	47.0	53.5	37.7	44.7	51.5	57.2	43.2	50.6	56.4	62.1
	LWB	32.9	38.5	45.8	53.0	36.0	42.5	49.5	56.7	40.0	46.7	53.2	59.8
65	TCG	30.8	34.3	36.9	37.6	32.6	35.9	37.4	37.9	35.2	37.1	37.6	38.7
	SHG	28.8	25.9	22.5	18.1	31.5	27.9	23.1	18.5	35.2	29.9	23.8	19.0
	TC	30.4	33.8	36.5	37.1	32.1	35.4	36.8	37.4	34.5	36.5	36.9	38.1
	kW	2.49	2.56	2.63	2.65	2.57	2.63	2.67	2.69	2.64	2.70	2.72	2.76
	CMP	2.22	2.30	2.36	2.38	2.28	2.34	2.37	2.39	2.31	2.37	2.38	2.43
	LDB	35.3	39.8	45.3	52.2	38.3	43.2	49.6	55.8	42.2	48	54.7	60
	LWB	34.3	38.9	44.6	51.8	37.0	41.9	48.3	55.2	40.0	45.7	52.3	58.5
75	TCG	28.0	32.6	36.2	38.8	30.4	34.4	37.6	39.0	33.8	36.5	38.9	40.2
	SHG	27.1	25.1	22.2	18.6	30.2	27.3	23.5	19.0	33.8	30.3	25.1	19.8
	TC	27.5	32.1	35.7	38.4	29.8	33.8	37.0	38.5	33.2	35.8	38.3	39.6
	kW	2.68	2.76	2.85	2.93	2.75	2.84	2.91	2.96	2.86	2.92	3.00	3.05
	CMP	2.42	2.50	2.58	2.66	2.46	2.55	2.61	2.67	2.53	2.59	2.66	2.72
	LDB	38.0	41.2	45.8	51.4	40.1	44.1	49.2	55.2	43.7	47.6	53.3	59.0
	LWB	36.9	40.3	45.1	51.0	38.7	43.0	48.2	54.6	40.7	46.0	51.7	58.0
85	TCG	25.9	29.4	34.5	38.1	28.5	31.8	36.2	39.4	31.7	34.6	38.2	40.6
	SHG	25.8	23.4	21.3	18.3	28.5	25.9	22.9	19.2	31.7	29.4	25.1	20.1
	TC	25.4	29.0	34.0	37.6	27.9	31.2	35.6	38.9	31.0	33.9	37.4	40.0
	kW	2.87	2.97	3.06	3.17	2.95	3.04	3.15	3.24	3.08	3.12	3.23	3.32
	CMP	2.61	2.71	2.79	2.90	2.66	2.75	2.86	2.94	2.75	2.79	2.90	2.99
	LDB	40.0	43.8	47.1	51.9	42.4	45.8	49.9	55	46.1	48.5	53.3	58.7
	LWB	38.8	42.9	46.4	51.5	40.1	44.7	49.0	54.4	41.9	47.0	52.1	57.8
95	TCG	24.0	26.8	31.9	36.3	26.3	29.0	34.2	38.0	29.6	31.6	33.0	39.5
	SHG	24.0	22.1	20.1	17.5	26.3	24.5	22.0	18.5	29.6	28.1	22.2	19.7
	TC	23.5	26.3	31.4	35.8	25.8	28.4	33.7	37.4	29.0	30.9	32.3	38.8
	kW	3.08	3.17	3.27	3.39	3.17	3.24	3.34	3.48	3.28	3.32	3.45	3.56
	CMP	2.82	2.90	3.00	3.12	2.88	2.94	3.05	3.18	2.95	2.99	3.12	3.23
	LDB	42.9	45.9	49.0	53.2	45.4	47.7	51.1	55.8	48.3	50.0	54.2	59.1
	LWB	40.3	44.9	48.3	52.7	41.6	46.5	50.2	55.2	43.0	48.5	53.0	58.2
105	TCG	22.6	24.9	28.9	34.3	24.8	26.0	31.2	35.9	27.7	28.4	33.9	37.7
	SHG	22.6	21.2	18.7	16.6	24.8	23.2	20.7	17.7	27.7	26.6	23.4	19.1
	TC	22.1	24.4	28.4	33.8	24.3	25.5	30.7	35.3	27.1	27.7	33.3	36.9
	kW	3.28	3.35	3.48	3.59	3.36	3.43	3.55	3.68	3.48	3.52	3.64	3.79
	CMP	3.02	3.08	3.21	3.32	3.07	3.14	3.25	3.39	3.15	3.19	3.31	3.46
	LDB	45.1	47.3	51.2	54.5	47.3	49.6	52.9	57	50.3	51.6	55.2	59.8
	LWB	41.5	46.3	50.4	54.0	42.5	48.3	51.9	56.3	44.0	50.1	54.0	59.0
115	TCG	21.2	23.1	26.9	31.4	23.4	24.1	28.0	33.7	25.7	26.3	30.6	35.3
	SHG	21.2	20.3	17.9	15.4	23.4	22.3	19.4	16.8	25.7	25.7	22.0	18.2
	TC	20.7	22.7	26.4	30.9	22.8	23.5	27.4	33.2	25.0	25.7	29.9	34.7
	kW	3.48	3.51	3.66	3.80	3.56	3.60	3.75	3.88	3.70	3.69	3.84	3.99
	CMP	3.21	3.25	3.39	3.53	3.26	3.31	3.46	3.58	3.37	3.36	3.50	3.66
	LDB	47.3	48.7	52.6	56.5	49.3	50.8	54.8	58.2	52.6	52.6	56.7	60.8
	LWB	42.5	47.6	51.8	55.8	43.5	49.5	53.8	57.4	45.2	51.0	55.5	59.9
125	TCG	19.8	20.6	25.0	29.0	21.9	22.1	25.9	30.5	24.0	24.0	27.2	32.9
	SHG	19.8	19.2	17.0	14.5	21.9	21.4	18.5	15.5	24.0	24.0	20.6	17.3
	TC	19.4	20.1	24.5	28.6	21.3	21.6	25.4	29.9	23.3	23.3	26.5	32.2
	kW	3.67	3.70	3.83	3.99	3.75	3.76	3.92	4.08	3.89	3.89	4.03	4.18
	CMP	3.40	3.43	3.56	3.72	3.45	3.47	3.63	3.79	3.56	3.56	3.70	3.84
	LDB	49.5	50.5	53.9	57.9	51.3	51.9	55.9	59.9	54.5	54.5	58.2	61.8
	LWB	43.6	49.4	53.0	57.2	44.5	50.7	54.9	59.1	46.0	52.1	56.9	60.9

LEGEND

BF — Bypass Factor
CMP — Compressor
Edb — Entering Dry Bulb
Ewb — Entering Wet Bulb
kW — Total Power
LDB — Leaving Dry Bulb
LWB — Leaving Wet Bulb
SHG — Gross Sensible Capacity (1000 Btuh)
TC — Total Net Cooling Capacity (1000 Btuh)
TCG — Gross Cooling Capacity (1000 Btuh)

Rating Condition

Not recommended for long-term operation

*Click here to view Systems Index Table.

NOTES:
1. Direct interpolation is permissible. Do not extrapolate.
2. The SHG is based on 80 F edb temperature of air entering indoor coil.
   Below 80 F edb, subtract (corr factor x cfm) from SHG.
   Above 80 F edb, add (corr factor x cfm) to SHG.
   Correction Factor = 1.10 x (1 – BF) x (edb – 80).

Duct Free Systems - Piston/Charge Combinations

Cooling Only High Wall

Indoor Unit	Outdoor Unit	AccuRater Piston No	Charge Lbs Note #1
619EAX0090E0	538CAX009000	Cap Tube	1.5
619ENX0120E0	538CNX012000	Cap Tube	1.8
619ENX0180E0	538ANX018000	49	4.6
619ENX0240E0	538ANX024000	57	6.0

Cooling Only Under Ceiling

Indoor Unit	Outdoor Unit	AccuRater Piston No	Charge Lbs Note #1
619CNX0240E0EAC ^	538ANX018000	53	3.7
	538JNX018000	53	4.3
619CNX0240E0EAC	538ANX024000	57	6.3
	538JNX024000	57	4.9 **
619CNX0360E0EAC	538ANX030000	65	7.1
	538JNX030000	65	5.2
619CNX0360E0EAC	538ANX036000	70	5.4
	538APX036000	70	5.4
	538AEX036000	70	5.4
	538JNX036000	70	5.0
619CNX0480E0EAC	538ANX048000	84	7.4
	538APX048000	84	7.4
	538AEX048000	84	7.4
	538JNX048000	84	7.4
619CNX0600E0EAA	538ANX060000	93	13.6
	538APX060000	93	13.6
	538AEX060000	93	13.6
	538JNX060000	93	13.6

Cooling Only Cassette

Indoor Unit	Outdoor Unit	AccuRater Piston No	Charge Lbs Note #1
619FNX0240E0	538ANX018000	52	4.8 **
	538JNX018000	52	3.9
619FNX0360E0	538ANX024000	62	5.4
	538JNX024000	62	4.6
	538ANX030000	63	7.7
	538JNX030000	63	5.6
	538ANX036000	65	6.0 **
	538APX036000	65	6.0 **
	538AEX036000	65	6.0 **
	538JNX036000	65	6.0 **

Legend:

* Non-serviceable Aeroquip piston

** Combination may require additional charge

^ The 024 size unit shown is configured as an 018 size unit changing the motor speed fan tap plug.

Note:

1) Charge is based on 25' of interconnecting tubing. Charge may need to be added for longer runs.

2) Cooling units shipped with a full charge. Heat Pumps are shipped with a holding charge

Heat Pump High Wall

Indoor Unit	Outdoor Unit	AccuRater Piston Indoor	AccuRater Piston Outdoor	Charge Lbs Note #1
619EAX0090W0	538DAX009000	32 *	30 *	1.5
619ENX0120H0	538DNX012000	42 *	42 *	2.0
619ENX0180H0	538DNX018000	51	47	4.95
619ENX0240H0	538DNX024000	59	52	5.1

Heat Pump Under Ceiling

Indoor Unit	Outdoor Unit	AccuRater Piston Indoor	AccuRater Piston No	Charge Lbs Note #1
619CNX0240W0AC	538BNX018000	55	49	4.3
	538BNX024000	55	49	6.3
619CNX0360W0AC	538BNX030000	63	55	6.4
	538BNX036000	63	61	7.5
	538BPX036000	63	61	8.7
	538BEX036000	63	61	8.7
619CNX0480W0AC	538BNX048000	84	78	10.0
	538BPX048000	84	78	10.0
	538BEX048000	84	78	10.0
619CNX0600W0AC	538BNX060000	96	82	11.9
	538BPX060000	96	82	11.9
	538BEX060000	96	82	11.9

Heat Pump Cassette

Indoor Unit	Outdoor Unit	AccuRater Piston Indoor	AccuRater Piston No	Charge Lbs Note #1
619FNX0240W0	538BNX018000	51	49	5.5
619FNX0360W0	538BNX024000	61	49	5.9
	538BNX030000	63	55	5.9
619FNX0480W0	538BNX036000	67	59	5.9
	538BPX036000	67	59	8.0
	538BEX036000	67	59	8.0

Heat Cool Under Ceiling

COOLING WITH ELECTRIC HEAT

Indoor Unit	Outdoor Unit	AccuRater Piston No	Charge Lbs Note #1
619CNX0240W0AC	538ANX018000	52	3.6
	538ANX024000	53	6.2 **
619CNX0360W0AC	538ANX030000	63	5.6
	538ANX036000	65	5.6
	538APX036000	65	5.6
	538AEX036000	65	5.6
619CNX0480W0AC	538ANX048000	84	7.4
	538APX048000	84	7.4
	538AEX048000	84	7.4
619CNX0600W0AC	538ANX060000	93	13.6
	538APX060000	93	13.6
	538AEX060000	93	13.6

Heat Cool Cassette

COOLING WITH ELECTRIC HEAT

Indoor Unit	Outdoor Unit	AccuRater Piston No	Charge Lbs Note #1
619FNX0240W0	538ANX018000	52	5.8 **
619FNX0360W0	538ANX024000	62	4.8
	538ANX030000	63	5.2
619FNX0480W0	538ANX036000	67	5.8
	538APX036000	67	5.8
	538AEX036000	67	5.8

Duct Free Systems - Piston/Charge Combinations

Cooling Only High Wall

Indoor Unit	Outdoor Unit	AccuRater Piston No	Charge Lbs Note #1
619EAX0090E0	538CAX009000	Cap Tube	1.5
619ENX0120E0	538CNX012000	Cap Tube	1.8
619ENX0180E0	538ANX018000	49	4.6
619ENX0240E0	538ANX024000	57	6.0

Cooling Only Under Ceiling

Indoor Unit	Outdoor Unit	AccuRater Piston No	Charge Lbs Note #1
619CNX0240E0EAC ^	538ANX018000	53	3.7
	538JNX018000	53	4.3
619CNX0240E0EAC	538ANX024000	57	6.3
	538JNX024000	57	4.9 **
619CNX0360E0EAC	538ANX030000	65	7.1
	538JNX030000	65	5.2
619CNX0360E0EAC	538ANX036000	70	5.4
	538APX036000	70	5.4
	538AEX036000	70	5.4
	538JNX036000	70	5.0
619CNX0480E0EAC	538ANX048000	84	7.4
	538APX048000	84	7.4
	538AEX048000	84	7.4
	538JNX048000	84	7.4
619CNX0600E0EAA	538ANX060000	93	13.6
	538APX060000	93	13.6
	538AEX060000	93	13.6
	538JNX060000	93	13.6

Cooling Only Cassette

Indoor Unit	Outdoor Unit	AccuRater Piston No	Charge Lbs Note #1
619FNX0240E0	538ANX018000	52	4.8 **
	538JNX018000	52	3.9
619FNX0360E0	538ANX024000	62	5.4
	538JNX024000	62	4.6
	538ANX030000	63	7.7
	538JNX030000	63	5.6
	538ANX036000	65	6.0 **
	538APX036000	65	6.0 **
	538AEX036000	65	6.0 **
	538JNX036000	65	6.0 **

Legend:

* Non-serviceable Aeroquip piston

** Combination may require additional charge

^ The 024 size unit shown is configured as an 018 size unit changing the motor speed fan tap plug.

Note:

1) Charge is based on 25' of interconnecting tubing. Charge may need to be added for longer runs.

2) Cooling units shipped with a full charge. Heat Pumps are shipped with a holding charge

Heat Pump High Wall

Indoor Unit	Outdoor Unit	AccuRater Piston Indoor	AccuRater Piston Outdoor	Charge Lbs Note #1
619EAX0090W0	538DAX009000	32 *	30 *	1.5
619ENX0120H0	538DNX012000	42 *	42 *	2.0
619ENX0180H0	538DNX018000	51	47	4.95
619ENX0240H0	538DNX024000	59	52	5.1

Heat Pump Under Ceiling

Indoor Unit	Outdoor Unit	AccuRater Piston Indoor	AccuRater Piston No	Charge Lbs Note #1
619CNX0240W0AC	538BNX018000	55	49	4.3
	538BNX024000	55	49	6.3
619CNX0360W0AC	538BNX030000	63	55	6.4
	538BNX036000	63	61	7.5
	538BPX036000	63	61	8.7
	538BEX036000	63	61	8.7
619CNX0480W0AC	538BNX048000	84	78	10.0
	538BPX048000	84	78	10.0
	538BEX048000	84	78	10.0
619CNX0600W0AC	538BNX060000	96	82	11.9
	538BPX060000	96	82	11.9
	538BEX060000	96	82	11.9

Heat Pump Cassette

Indoor Unit	Outdoor Unit	AccuRater Piston Indoor	AccuRater Piston No	Charge Lbs Note #1
619FNX0240W0	538BNX018000	51	49	5.5
619FNX0360W0	538BNX024000	61	49	5.9
	538BNX030000	63	55	5.9
619FNX0480W0	538BNX036000	67	59	5.9
	538BPX036000	67	59	8.0
	538BEX036000	67	59	8.0

Heat Cool Under Ceiling

COOLING WITH ELECTRIC HEAT

Indoor Unit	Outdoor Unit	AccuRater Piston No	Charge Lbs Note #1
619CNX0240W0AC	538ANX018000	52	3.6
	538ANX024000	53	6.2 **
619CNX0360W0AC	538ANX030000	63	5.6
	538ANX036000	65	5.6
	538APX036000	65	5.6
	538AEX036000	65	5.6
619CNX0480W0AC	538ANX048000	84	7.4
	538APX048000	84	7.4
	538AEX048000	84	7.4
619CNX0600W0AC	538ANX060000	93	13.6
	538APX060000	93	13.6
	538AEX060000	93	13.6

Heat Cool Cassette

COOLING WITH ELECTRIC HEAT

Indoor Unit	Outdoor Unit	AccuRater Piston No	Charge Lbs Note #1
619FNX0240W0	538ANX018000	52	5.8 **
619FNX0360W0	538ANX024000	62	4.8
	538ANX030000	63	5.2
619FNX0480W0	538ANX036000	67	5.8
	538APX036000	67	5.8
	538AEX036000	67	5.8

Duct Free Systems - Piston/Charge Combinations

Cooling Only High Wall

Indoor Unit	Outdoor Unit	AccuRater Piston No	Charge Lbs Note #1
619EAX0090E0	538CAX009000	Cap Tube	1.5
619ENX0120E0	538CNX012000	Cap Tube	1.8
619ENX0180E0	538ANX018000	49	4.6
619ENX0240E0	538ANX024000	57	6.0

Cooling Only Under Ceiling

Indoor Unit	Outdoor Unit	AccuRater Piston No	Charge Lbs Note #1
619CNX0240E0EAC ^	538ANX018000	53	3.7
	538JNX018000	53	4.3
619CNX0240E0EAC	538ANX024000	57	6.3
	538JNX024000	57	4.9 **
619CNX0360E0EAC	538ANX030000	65	7.1
	538JNX030000	65	5.2
619CNX0360E0EAC	538ANX036000	70	5.4
	538APX036000	70	5.4
	538AEX036000	70	5.4
	538JNX036000	70	5.0
619CNX0480E0EAC	538ANX048000	84	7.4
	538APX048000	84	7.4
	538AEX048000	84	7.4
	538JNX048000	84	7.4
619CNX0600E0EAA	538ANX060000	93	13.6
	538APX060000	93	13.6
	538AEX060000	93	13.6
	538JNX060000	93	13.6

Cooling Only Cassette

Indoor Unit	Outdoor Unit	AccuRater Piston No	Charge Lbs Note #1
619FNX0240E0	538ANX018000	52	4.8 **
	538JNX018000	52	3.9
619FNX0360E0	538ANX024000	62	5.4
	538JNX024000	62	4.6
	538ANX030000	63	7.7
	538JNX030000	63	5.6
	538ANX036000	65	6.0 **
	538APX036000	65	6.0 **
	538AEX036000	65	6.0 **
	538JNX036000	65	6.0 **

Legend:

* Non-serviceable Aeroquip piston

** Combination may require additional charge

^ The 024 size unit shown is configured as an 018 size unit changing the motor speed fan tap plug.

Note:

1) Charge is based on 25' of interconnecting tubing. Charge may need to be added for longer runs.

2) Cooling units shipped with a full charge. Heat Pumps are shipped with a holding charge

Heat Pump High Wall

Indoor Unit	Outdoor Unit	AccuRater Piston Indoor	AccuRater Piston Outdoor	Charge Lbs Note #1
619EAX0090W0	538DAX009000	32 *	30 *	1.5
619ENX0120H0	538DNX012000	42 *	42 *	2.0
619ENX0180H0	538DNX018000	51	47	4.95
619ENX0240H0	538DNX024000	59	52	5.1

Heat Pump Under Ceiling

Indoor Unit	Outdoor Unit	AccuRater Piston Indoor	AccuRater Piston No	Charge Lbs Note #1
619CNX0240W0AC	538BNX018000	55	49	4.3
	538BNX024000	55	49	6.3
619CNX0360W0AC	538BNX030000	63	55	6.4
	538BNX036000	63	61	7.5
	538BPX036000	63	61	8.7
	538BEX036000	63	61	8.7
619CNX0480W0AC	538BNX048000	84	78	10.0
	538BPX048000	84	78	10.0
	538BEX048000	84	78	10.0
619CNX0600W0AC	538BNX060000	96	82	11.9
	538BPX060000	96	82	11.9
	538BEX060000	96	82	11.9

Heat Pump Cassette

Indoor Unit	Outdoor Unit	AccuRater Piston Indoor	AccuRater Piston No	Charge Lbs Note #1
619FNX0240W0	538BNX018000	51	49	5.5
619FNX0360W0	538BNX024000	61	49	5.9
	538BNX030000	63	55	5.9
619FNX0480W0	538BNX036000	67	59	5.9
	538BPX036000	67	59	8.0
	538BEX036000	67	59	8.0

Heat Cool Under Ceiling

COOLING WITH ELECTRIC HEAT

Indoor Unit	Outdoor Unit	AccuRater Piston No	Charge Lbs Note #1
619CNX0240W0AC	538ANX018000	52	3.6
	538ANX024000	53	6.2 **
619CNX0360W0AC	538ANX030000	63	5.6
	538ANX036000	65	5.6
	538APX036000	65	5.6
	538AEX036000	65	5.6
619CNX0480W0AC	538ANX048000	84	7.4
	538APX048000	84	7.4
	538AEX048000	84	7.4
619CNX0600W0AC	538ANX060000	93	13.6
	538APX060000	93	13.6
	538AEX060000	93	13.6

Heat Cool Cassette

COOLING WITH ELECTRIC HEAT

Indoor Unit	Outdoor Unit	AccuRater Piston No	Charge Lbs Note #1
619FNX0240W0	538ANX018000	52	5.8 **
619FNX0360W0	538ANX024000	62	4.8
	538ANX030000	63	5.2
619FNX0480W0	538ANX036000	67	5.8
	538APX036000	67	5.8
	538AEX036000	67	5.8

Duct Free Systems - Piston/Charge Combinations

Cooling Only High Wall

Indoor Unit	Outdoor Unit	AccuRater Piston No	Charge Lbs Note #1
619EAX0090E0	538CAX009000	Cap Tube	1.5
619ENX0120E0	538CNX012000	Cap Tube	1.8
619ENX0180E0	538ANX018000	49	4.6
619ENX0240E0	538ANX024000	57	6.0

Cooling Only Under Ceiling

Indoor Unit	Outdoor Unit	AccuRater Piston No	Charge Lbs Note #1
619CNX0240E0EAC ^	538ANX018000	53	3.7
	538JNX018000	53	4.3
619CNX0240E0EAC	538ANX024000	57	6.3
	538JNX024000	57	4.9 **
619CNX0360E0EAC	538ANX030000	65	7.1
	538JNX030000	65	5.2
619CNX0360E0EAC	538ANX036000	70	5.4
	538APX036000	70	5.4
	538AEX036000	70	5.4
	538JNX036000	70	5.0
619CNX0480E0EAC	538ANX048000	84	7.4
	538APX048000	84	7.4
	538AEX048000	84	7.4
	538JNX048000	84	7.4
619CNX0600E0EAA	538ANX060000	93	13.6
	538APX060000	93	13.6
	538AEX060000	93	13.6
	538JNX060000	93	13.6

Cooling Only Cassette

Indoor Unit	Outdoor Unit	AccuRater Piston No	Charge Lbs Note #1
619FNX0240E0	538ANX018000	52	4.8 **
	538JNX018000	52	3.9
619FNX0360E0	538ANX024000	62	5.4
	538JNX024000	62	4.6
	538ANX030000	63	7.7
	538JNX030000	63	5.6
	538ANX036000	65	6.0 **
	538APX036000	65	6.0 **
	538AEX036000	65	6.0 **
	538JNX036000	65	6.0 **

Legend:

* Non-serviceable Aeroquip piston

** Combination may require additional charge

^ The 024 size unit shown is configured as an 018 size unit changing the motor speed fan tap plug.

Note:

1) Charge is based on 25' of interconnecting tubing. Charge may need to be added for longer runs.

2) Cooling units shipped with a full charge. Heat Pumps are shipped with a holding charge

Heat Pump High Wall

Indoor Unit	Outdoor Unit	AccuRater Piston Indoor	AccuRater Piston Outdoor	Charge Lbs Note #1
619EAX0090W0	538DAX009000	32 *	30 *	1.5
619ENX0120H0	538DNX012000	42 *	42 *	2.0
619ENX0180H0	538DNX018000	51	47	4.95
619ENX0240H0	538DNX024000	59	52	5.1

Heat Pump Under Ceiling

Indoor Unit	Outdoor Unit	AccuRater Piston Indoor	AccuRater Piston No	Charge Lbs Note #1
619CNX0240W0AC	538BNX018000	55	49	4.3
	538BNX024000	55	49	6.3
619CNX0360W0AC	538BNX030000	63	55	6.4
	538BNX036000	63	61	7.5
	538BPX036000	63	61	8.7
	538BEX036000	63	61	8.7
619CNX0480W0AC	538BNX048000	84	78	10.0
	538BPX048000	84	78	10.0
	538BEX048000	84	78	10.0
619CNX0600W0AC	538BNX060000	96	82	11.9
	538BPX060000	96	82	11.9
	538BEX060000	96	82	11.9

Heat Pump Cassette

Indoor Unit	Outdoor Unit	AccuRater Piston Indoor	AccuRater Piston No	Charge Lbs Note #1
619FNX0240W0	538BNX018000	51	49	5.5
619FNX0360W0	538BNX024000	61	49	5.9
	538BNX030000	63	55	5.9
619FNX0480W0	538BNX036000	67	59	5.9
	538BPX036000	67	59	8.0
	538BEX036000	67	59	8.0

Heat Cool Under Ceiling

COOLING WITH ELECTRIC HEAT

Indoor Unit	Outdoor Unit	AccuRater Piston No	Charge Lbs Note #1
619CNX0240W0AC	538ANX018000	52	3.6
	538ANX024000	53	6.2 **
619CNX0360W0AC	538ANX030000	63	5.6
	538ANX036000	65	5.6
	538APX036000	65	5.6
	538AEX036000	65	5.6
619CNX0480W0AC	538ANX048000	84	7.4
	538APX048000	84	7.4
	538AEX048000	84	7.4
619CNX0600W0AC	538ANX060000	93	13.6
	538APX060000	93	13.6
	538AEX060000	93	13.6

Heat Cool Cassette

COOLING WITH ELECTRIC HEAT

Indoor Unit	Outdoor Unit	AccuRater Piston No	Charge Lbs Note #1
619FNX0240W0	538ANX018000	52	5.8 **
619FNX0360W0	538ANX024000	62	4.8
	538ANX030000	63	5.2
619FNX0480W0	538ANX036000	67	5.8
	538APX036000	67	5.8
	538AEX036000	67	5.8

Application

Refrigerant and Long Line Applications – Section 15

- 538AX009, CNX012 & 538DAX009, DNX012
- 538ANX, APX, AEX
- 538SNX
- 538BNX, BPX, BEX, & DNX
- 538JNX
- Console

Refrigerant Lines – 538CAX009,CNX012 & 538DAX009,DNX012

1. This series of condensers are shipped with a full charge of R-22 refrigerant. Since all refrigerant lines are on the low side of the system, it is not normally necessary to add or remove charge.

2. The units have mixed phase refrigerant flow in the liquid line. **DO NOT install a filter drier in the liquid line. The liquid line must be insulated.**

3. No line size changes should be made.

4. All charges, line sizes, and capacities are based on 25 feet of refrigerant lines. For runs over 25 feet see Long Line Applications.

   Note: For runs less than 25 feet, some of the charge may need to be removed to obtain the correct system superheat. The minimum line length should be 8 feet.

5. Refrigerant lines should not be buried in the ground. If it is necessary to bury the lines, not more than 36" should be buried. Provide a minimum 6" vertical rise to the service valves to prevent refrigerant migration.

6. The vapor line must be insulated. Use a minimum of ½" thick insulation. **Closed cell insulation is recommended in all long line applications.**

7. Special consideration should be given to isolating interconnecting tubing from the building structure. Isolate the tubing so that vibration or noise is not transmitted into the structure.

Long Line Applications

1. Liquid lines should be 1/4" only. DO NOT resize liquid lines for additional length. The liquid line must be insulated

2. When sizing vapor line, determine line length by finding equivalent feet of pipe. Equivalent line lengths equal the linear length (measured length) of interconnecting vapor tubing plus losses due to elbows (see Fitting Loss in Equivalent Feet for Elbows Table #2) If the number of elbows is not yet known, assume 50% additional length for the equivalent length. Be sure oil can be properly returned to the compressor. Consult the Bryant Systems Design Guide for proper oil return recommendations. For line lengths from 8 to 35 feet no special piping requirements are normally required.

3. A capillary metering device is used for the CAX & CNX. The DAX & DNX series use non-serviceable Aeroquip pistons.

4. Horizontal configuration Diagram #1

   a. Slope the vapor line toward the indoor unit to provide for refrigerant migration protection during the off cycle due to temperature differences caused by slight elevation changes between indoor and outdoor units. A solenoid valve is not required.

5. Elevated configuration: (Lift) Indoor unit above outdoor unit Diagram #3

   a. The maximum elevation difference is 16 feet and the maximum equivalent length of piping is 35 feet. See Table #1

   b. Install an inverted trap in the vapor line. The top of the trap must be above the top of the indoor unit. This prevents the refrigeration from collecting in the vapor line.

6. Lowered configuration: (Drop) Indoor unit below outdoor unit Diagram #4

   a. The maximum elevation difference is 30 feet for and the maximum equivalent length of piping is 35 feet.

7. Additional Charge: No additional charge should be required

Refrigerant Lines – 538ANX, APX, AEX

1. The 538ANX, APX, AEX units are shipped with a full charge of R-22 refrigerant based on the smallest charge combination.

2. All charges, line sizes, and capacities are based on the fan coil with the smallest charge and 25 feet of refrigerant lines. For system charge see Piston/Charge Combination section. Add additional charge by weight as necessary and check charge by the super heat method. For runs over 25 feet see Long Line Applications.

   Note: For runs less than 25 feet, some of the charge may need to be removed to obtain the correct system superheat. The minimum line length should be 8 feet.

3. Install a filter dryer in the unit's liquid line. Use of a field supplied moisture indicator is also recommended.

4. Refrigerant lines should not be buried in the ground. If it is necessary to bury the lines, not more than 36" should be buried. Provide a minimum 6" vertical rise to the service valves to prevent refrigerant migration.

5. The vapor line must be insulated. Use a minimum of ½" thick insulation. **Closed cell insulation is recommended in all long line applications.**

6. Special consideration should be given to isolating interconnecting tubing from the building structure. Isolate the tubing so that vibration or noise is not transmitted into the structure.

Long Line Applications

1. Liquid lines should be 3/8" only. DO NOT resize liquid lines for additional length.

2. When sizing vapor line, determine line length by finding equivalent feet of pipe. Equivalent line lengths equal the linear length (measured length) of interconnecting vapor tubing plus losses due to elbows (see Fitting Loss in Equivalent Feet for Elbows Table #2) If the number of elbows is not yet known, assume 50% additional length for the equivalent length. In determining line size, be sure oil can be properly returned to the compressor. Consult the Bryant Systems Design Guide for proper oil return recommendations. For line lengths from 25 to 49 feet no special piping requirements are normally required. Adjust charge to required amount by adding refrigerant per step #10 below.

For line lengths over 50 feet

3. A crankcase heater should be added to scroll compressor units (all non-scroll compressor units have standard crankcase heaters). Crankcase heaters help prevent refrigerant migration to the compressor during the off cycle.

4. Accessory wind baffles are recommended.

5. Any time the equivalent line length is over 100 feet, a liquid line solenoid must be used. A liquid line solenoid may also be required for vertical lift applications over 25 feet. See step #9 and locate the solenoid at the outdoor or indoor unit as required.

6. The Effective Capacity Loss, Table #3 provides the estimated percentage of nominal cooling capacity losses based on the standard required vapor line size versus what is selected for long line applications.

   a. Select the desired vapor line size from Table #3 based on equivalent feet and desired vapor line size.

   b. Subtract the nominal percentage loss from the unit cooling capacities.

7. Changes in piston size. The metering device for long line applications must be adjusted to compensate for the frictional losses due to the long refrigerant lines, refrigerant line accessories, and indoor coils above or below the outdoor unit. The AccuRater refrigerant metering device piston may need to be changed to provide this adjustment. The AccuRater piston should be changed at the indoor unit depending upon system configuration and line length. Use the Change in Indoor Piston Size for Elevation table #4 to determine the correct piston size. The standard system's piston size is shown in the Piston/Charge Combination Section. **(MORE)**

a. Horizontal configuration: If the total equivalent horizontal length is 100 feet or longer, the piston must be increased one full piston size, in addition to the charge change in step #10. If the exact size is not available, use the next smaller size per Table #5.

b. Elevated Configuration: After finding the appropriate change in piston size add or subtract the change from the original piston size number. If the piston size is decreased, round down to the next common piston size. If the piston size is increased, round the new pistons size up to the next common size.

8. Liquid line solenoid and tubing configuration: The solenoid has a flow arrow stamped on the valve body. When the valve is closed (not energized) and pressure is applied in the direction of the flow arrow, complete shut off will occur. If pressure is applied against the direction of the arrow, leakage through the valve will occur. When determining the proper location for a solenoid in a system liquid line, consider both flow direction and location of the valve in the system. See Diagram #1thru #4 for proper location and install as follows:

   a. Horizontal configuration Diagram #1

      1. Install a liquid line solenoid valve within 2 feet of the fan coil with the flow arrow pointing toward the indoor unit if equivalent feet of piping is 100 feet or more.

      2. Slope the vapor line toward the indoor unit to provide for refrigerant migration protection during the off cycle due to temperature differences caused by slight elevation changes between indoor and outdoor units.

      NOTE: When installing a liquid line solenoid, a low voltage transformer may be required.

   b. Elevated configuration: (Lift) Indoor unit above outdoor unit Diagram #3

      1. No Solenoid is required below 25 feet of lift. If there is over 25 feet of lift, a solenoid valve is required in the liquid line within 2 feet of the condenser with the flow arrow pointing toward the outdoor unit.

      3. The maximum elevation difference is 65 feet, and the maximum equivalent length of piping is 200 feet.

      4. Install an inverted trap in the vapor line. The top of the trap must be above the top of the indoor unit. This prevents the refrigeration from collecting in the vapor line.

   c. Lowered configuration: (Drop) Indoor unit below outdoor unit Diagram #4

      1. For lines shorter than 100 feet, no solenoid valve is required in the liquid line. For lines over 100 feet, install a solenoid valve in the liquid line within 2 feet of the condenser with the arrow pointing toward the outdoor unit.

      2. The maximum elevation difference is 150 feet, and the maximum equivalent length of piping is 200 feet.

9. Additional Charge: The unit should be charged by weighing in the appropriate amount of refrigerant. Add charge based on the additional length of line, which is over 25 feet. Add 0.58 oz of refrigerant for every 1-foot increase over the 25 feet. See Piston/Charge Combination Section for standard charge at 25 feet of liquid line length.

Refrigerant Lines – 538SNX

1. The 538SNX units are shipped with a full charge of R-22 refrigerant.

2. All charges, line sizes and capacities are based on 25 feet of refrigerant lines. For runs over 25 feet see Long Line Applications.

3. Filter dryers are provided in the unit.

4. Refrigerant lines should not be buried in the ground. If it is necessary to bury the lines, not more than 36" should be buried. Provide a minimum 6" vertical rise to the service valves to prevent refrigerant migration.

5. The vapor and liquid lines must be insulated. Use a minimum of ½" thick insulation. Closed cell insulation is recommended in all long line applications.

6. Special consideration should be given to isolating interconnecting tubing from the building structure. Isolate the tubing so that vibration or noise is not transmitted into the structure.

Long Line Applications

1. Two phase supply lines should be 3/8" only. DO NOT resize liquid lines for additional length.

2. When sizing the 5/8" vapor line, determine line length by finding equivalent feet of pipe. Equivalent line lengths equal the linear length (measured length) of interconnecting vapor tubing plus losses due to elbows (see Fitting Loss in Equivalent Feet for Elbows Table #2) If the number of elbows is not yet known, assume 50% additional length for the equivalent length. In determining line size, be sure oil can be properly returned to the compressor. Consult the Bryant Systems Design Guide for proper oil return recommendations. For line lengths from 25 to 49 feet no special piping requirements are normally required.

For line lengths over 25 feet

3. Due to the TXV valve a liquid line solenoid is not required for vertical lift applications over 25 feet.

    a. Horizontal configuration Diagram #1

        1. Slope the vapor line toward the indoor unit to provide for refrigerant migration protection during the off cycle due to temperature differences caused by slight elevation changes between indoor and outdoor units.

    b. Elevated configuration: (Lift) Indoor unit above outdoor unit Diagram #3

        1. The maximum elevation difference is 30 feet and the maximum equivalent length of piping is 50 feet.

        2. Install an inverted trap in the vapor line. The top of the trap must be above the top of the indoor unit. This prevents the refrigeration from collecting in the vapor line.

    c. Lowered configuration: (Drop) Indoor unit below outdoor unit Diagram #4

        1. The maximum elevation difference is 30 feet and the maximum equivalent length of piping is 50 feet.

        2. Additional Charge: Due to the TXV valve additional charge should not be required

Refrigerant Lines – 538BNX, BPX, BEX, & DNX

1. The 538BNX, BPX, BEX, & DNX units are shipped with a holding charge of R-22 refrigerant.

2. All charges, line sizes, and capacities are based on the fan coil with the smallest charge and 25 feet of refrigerant lines. For system charge see Piston/Charge Combination section. Add additional charge by weight as necessary and check charge by the super heat method. For runs over 25 feet see Long Line Applications.

   Note: For runs less than 25 feet, some of the charge may need to be removed to obtain the correct system superheat. The minimum line length should be 8 feet.

3. Install a filter dryer in the unit's liquid line. Use of a field supplied moisture indicator is also recommended.

4. Refrigerant lines should not be buried in the ground. If it is necessary to bury the lines, not more than 36" should be buried. Provide a minimum 6" vertical rise to the service valves to prevent refrigerant migration.

5. The vapor line must be insulated. Use a minimum of ½" thick insulation. **Closed cell insulation is recommended in all long line applications.**

6. Special consideration should be given to isolating interconnecting tubing from the building structure. Isolate the tubing so that vibration or noise is not transmitted into the structure.

Long Line Applications

1. Liquid lines should be 3/8" only. DO NOT resize liquid lines for additional length.

2. When sizing vapor line, determine line length by finding equivalent feet of pipe. Equivalent line lengths equal the linear length (measured length) of interconnecting vapor tubing plus losses due to elbows (see Fitting Loss in Equivalent Feet for Elbows Table #2) If the number of elbows is not yet known, assume 50% additional length for the equivalent length. In determining line size, be sure oil can be properly returned to the compressor. Consult the Bryant Systems Design Guide for proper oil return recommendations. For line lengths from 25 to 49 feet no special piping requirements are normally required. Adjust charge to required amount by adding refrigerant per step #10 below.

For line lengths over 50 feet

3. A crankcase heater should be added to scroll compressor units (all non-scroll compressor units have standard crankcase heaters). Crankcase heaters help prevent refrigerant migration to the compressor during the off cycle.

4. Accessory wind baffles are recommended.

5. Any time the equivalent line length is over 100 feet, a liquid line solenoid must be used. A liquid line solenoid may also be required for vertical lift applications over 25 feet. See step #9 and locate the solenoid at the outdoor or indoor unit as required.

6. The Effective Capacity Loss, Table #3 provides the estimated percentage of nominal cooling capacity losses based on the standard required vapor line size versus what is selected for long line applications. Heating capacity is not generally affected by long line applications

   a. Select the desired vapor line size from Table #3 based on equivalent feet and desired vapor line size.

   b. Subtract the nominal percentage loss from the unit cooling capacities.

7. Changes in piston size. The metering device for long line applications must be adjusted to compensate for the frictional losses due to the long refrigerant lines, refrigerant line accessories, and indoor coils above or below the outdoor unit. The AccuRater refrigerant metering device piston may need to be changed to provide this adjustment. The AccuRater piston should be changed at the indoor or outdoor or both units depending upon system configuration and line length. Use the Change in Indoor/Outdoor Piston Size for Elevation table #4 to determine the correct piston size. The standard system's piston size and locations are shown in the Piston/Charge Combination Section.

(MORE)

a. Horizontal configuration: If the total equivalent horizontal length is 100 feet or longer, the piston must be increased one full piston size, in addition to the charge change in step #10. If the exact size is not available, use the next smaller size per Table #5.

b. Elevated Configuration: After finding the appropriate change in piston size add or subtract the change from the original piston size number. If the piston size is decreased, round down to the next common piston size. If the piston size is increased, round the new pistons size up to the next common size.

8. Liquid line solenoid and tubing configuration. The solenoid has a flow arrow stamped on the valve body. When the valve is closed (not energized) and pressure is applied in the direction of the flow arrow, complete shut off will occur. If pressure is applied against the direction of the arrow, leakage through the valve will occur. When determining the proper location for a solenoid in a system liquid line, consider both flow direction and location of the valve in the system. See Diagram #1thru #4 for proper location and install as follows:

   a. Horizontal configuration Diagram #2

      1. Install a ***biflow*** liquid line solenoid valve within 2 feet of the condenser with the flow arrow pointing toward the outdoor unit if equivalent feet of piping is 100 feet or more.

      2. Slope the vapor line toward the indoor unit to provide for refrigerant migration protection during the off cycle due to temperature differences caused by slight elevation changes between indoor and outdoor units.

      NOTE: When installing a liquid line solenoid, a low voltage transformer may be required.

   b. Elevated configuration: (Lift) Indoor unit above outdoor unit Diagram #3

      1. A ***biflow*** solenoid valve is required in the liquid line within 2 feet of the outdoor unit with the flow arrow pointing toward the heat pump unit.

      2. The maximum elevation difference is 65 feet and the maximum equivalent length of piping is 200 feet.

      3. Install an inverted trap in the vapor line. The top of the trap must be above the top of the indoor unit. This prevents the refrigeration from collecting in the vapor line.

   c. Lowered configuration: (Drop) Indoor unit below outdoor unit Diagram #4

      1. For lines with less than 25 feet of drop, no solenoid valve is required in the liquid line. For lines with over 25 feet of drop, install a biflow solenoid valve in the liquid line within 2 feet of the condenser with the arrow pointing toward the outdoor unit.

      2. The maximum elevation difference is 150 feet for and the maximum equivalent length of piping is 200 feet.

9. Additional Charge: The unit should be charged by weighing in the appropriate amount of refrigerant. Add charge based on the additional length of line which is over 25 feet. Add 0.58 oz of refrigerant for every 1 foot increase over the 25 feet. See Piston/Charge Combination Section for standard charge at 25 feet of liquid line length.

Refrigerant Lines – 538JNX

1. The 538JNX units are shipped with a full charge of R-22 refrigerant based on the smallest charge combination.

2. All charges, line sizes, and capacities are based on the fan coil with the smallest charge and 25 feet of refrigerant lines. For system charge see Piston/Charge Combination section. Add additional charge by weight as necessary and check charge by the super heat method. For runs over 25 feet see Long Line Applications.

   Note: For runs less than 25 feet, some of the charge may need to be removed to obtain the correct system superheat. The minimum line length should be 8 feet.

3. Install a filter dryer in the unit's liquid line. Use of a field supplied moisture indicator is also recommended.

4. Refrigerant lines should not be buried in the ground. If it is necessary to bury the lines, not more than 36" should be buried. Provide a minimum 6" vertical rise to the service valves to prevent refrigerant migration.

5. The vapor line must be insulated. Use a minimum of ½" thick insulation. **Closed cell insulation is recommended in all long line applications.**

6. Special consideration should be given to isolating interconnecting tubing from the building structure. Isolate the tubing so that vibration or noise is not transmitted into the structure.

Long Line Applications

1. Liquid lines should be 3/8" only. DO NOT resize liquid lines for additional length.

2. When sizing vapor line, determine line length by finding equivalent feet of pipe. Equivalent line lengths equal the linear length (measured length) of interconnecting vapor tubing plus losses due to elbows (see Fitting Loss in Equivalent Feet for Elbows Table #2) If the number of elbows is not yet known, assume 50% additional length for the equivalent length. In determining line size, be sure oil can be properly returned to the compressor. Consult the Bryant Systems Design Guide for proper oil return recommendations. For line lengths from 25 to 49 feet no special piping requirements are normally required. Adjust charge to required amount by adding refrigerant per step #10 below.

For line lengths over 50 feet

3. A crankcase heater should be added to scroll compressor units (all non-scroll compressor units have standard crankcase heaters). Crankcase heaters help prevent refrigerant migration to the compressor during the off cycle.

4. Accessory wind baffles are recommended.

5. A liquid line solenoid may also be required for vertical lift applications over 25 feet. See step #9 and locate the solenoid at the outdoor or indoor unit as required.

6. The Effective Capacity Loss, Table #3 provides the estimated percentage of nominal cooling capacity losses based on the standard required vapor line size versus what is selected for long line applications.

   a. Select the desired vapor line size from Table #3 based on equivalent feet and desired vapor line size.

   b. Subtract the nominal percentage loss from the unit cooling capacities.

7. Changes in piston size. The metering device for long line applications must be adjusted to compensate for the frictional losses due to the long refrigerant lines, refrigerant line accessories, and indoor coils above or below the outdoor unit. The AccuRater refrigerant metering device piston may need to be changed to provide this adjustment. The AccuRater piston should be changed at the indoor unit depending upon system configuration and line length. Use the Change in Indoor/Outdoor Piston Size for Elevation table #4 to determine the correct piston size. The standard system's piston size is shown in the Piston/Charge Combination Section. **(MORE)**

a. Horizontal configuration: For horizontal applications no piston change is required. For additional charge see step #10.

b. Elevated Configuration: Using table #4, add or subtract the change from the original piston size number. If the piston size is decreased, round down to the next common piston size. If the piston size is increased, round the new pistons size up to the next common size. See table #5

8. Liquid line solenoid and tubing configuration: The solenoid has a flow arrow stamped on the valve body. When the valve is closed (not energized) and pressure is applied in the direction of the flow arrow, complete shut off will occur. If pressure is applied against the direction of the arrow, leakage through the valve will occur. When determining the proper location for a solenoid in a system liquid line, consider both flow direction and location of the valve in the system. See Diagram #1thru #4 for proper location and install as follows:

   a. Horizontal configuration Diagram #1

      1. Install a liquid line solenoid valve within 2 feet of the fan coil with the flow arrow pointing toward the indoor unit if equivalent feet of piping is 50 feet or more.

      2. Slope the vapor line toward the indoor unit to provide for refrigerant migration protection during the off cycle due to temperature differences caused by slight elevation changes between indoor and outdoor units.

      NOTE: When installing a liquid line solenoid, a low voltage transformer may be required.

   b. Elevated configuration: (Lift) Indoor unit above outdoor unit Diagram #3

      1. No Solenoid is required below 25 feet of lift. If there is over 25 feet of lift, a solenoid valve is required in the liquid line within 2 feet of the condenser with the flow arrow pointing toward the outdoor unit.

      2. The maximum elevation difference is 65 feet and the maximum equivalent length of piping is 100 feet.

      3. Install an inverted trap in the vapor line. The top of the trap must be above the top of the indoor unit. This prevents the refrigeration from collecting in the vapor line.

   c. Lowered configuration: (Drop) Indoor unit below outdoor unit Diagram #4

      1. For lines shorter than 100 feet, no solenoid valve is required in the liquid line.

      2. The maximum elevation difference is 75 feet and the maximum equivalent length of piping is 100 feet.

9. Additional Charge: The unit should be charged by weighing in the appropriate amount of refrigerant. Add charge based on the additional length of line which is over 25 feet. Add 0.58 oz of refrigerant for every 1 foot increase over the 25 feet. See Piston/Charge Combination Section for standard charge at 25 feet of liquid line length.

Refrigerant Lines – 38CG, CS, SB, & SC

1. The 38CG, CS, SB, & SC series condensers are shipped with a full charge of R-22 refrigerant. Since all refrigerant lines are on the low side of the system, it is not normally necessary to add or remove charge.

2. The 38CG, CS, SB, & SC series have mixed phase refrigerant flow in the liquid line. **DO NOT install a filter drier in the liquid line. The liquid line must be insulated.**

3. No line size changes should be made.

4. All charges, line sizes, and capacities are based on 25 feet of refrigerant lines. For runs over 25 feet see Long Line Applications.

   Note: For runs less than 25 feet, some of the charge may need to be removed to obtain the correct system superheat. The minimum line length should be 8 feet.

5. Refrigerant lines should not be buried in the ground. If it is necessary to bury the lines, not more than 36" should be buried. Provide a minimum 6" vertical rise to the service valves to prevent refrigerant migration.

6. The vapor line must be insulated. Use a minimum of 3/8"" thick insulation. **Closed cell insulation is recommended in all long line applications.**

7. Special consideration should be given to isolating interconnecting tubing from the building structure. Isolate the tubing so that vibration or noise is not transmitted into the structure.

Long Line Applications

1. Refrigerant lines: DO NOT resize lines for additional length. The liquid line must be insulated. Size lines per the following table:

Capacity	**Liquid**	**Vapor**
1.5 Ton	¼" dia	½" dia
2.0 Ton	3/8" dia	5/8" dia
2.5 Ton	3/8" dia	5/8" dia

2. Be sure oil can be properly returned to the compressor. Consult the Bryant Systems Design Guide for proper oil return recommendations. For line lengths from 8 to 26 feet no special piping requirements are normally required. For lengths over 26 feet add 0.9oz of refrigerant and 0.35oz of oil for each additional foot of tubing used.

3. A capillary metering device is used for this series of condensers.

4. Horizontal configuration Diagram #1

   a. Slope the vapor line toward the indoor unit to provide for refrigerant migration protection during the off cycle due to temperature differences caused by slight elevation changes between indoor and outdoor units. A solenoid valve is not required.

5. Elevated configuration: (Lift) Indoor unit above outdoor unit Diagram #3

   a. The maximum elevation difference and the maximum equivalent length of piping is shown in the table below.

Capacity	Difference	Equivalent Length
1.5 Ton	49'	98'
2.0 Ton	66'	131'
2.5 Ton	33'	98'

   b. Install an inverted trap in the vapor line. The top of the trap must be above the top of the indoor unit. This prevents the refrigeration from collecting in the vapor line.

MORE ON NEXT PAGE

6. Lowered configuration: (Drop) Indoor unit below outdoor unit Diagram #4

   a. The maximum elevation difference and the maximum equivalent length of piping is shown in the table below.

Capacity	Difference	Equivalent Length
1.5 Ton	49’	98’
2.0 Ton	66’	131’
2.5 Ton	33’	98’

7. Additional Charge: No additional charge should be required

Table #1 - Line Lengths (Maximum)

Model	"B" Lift Note #1	"C" Drop Note #2	"A" Tube Lgth
538CAX, CNX,	30'	30'	50'
538DAX, DNX012	30'	30'	50'
538ANX, APX, AEX	65'	150'	200'
538DNX018, 024	65'	150'	200'
538SNX	30'	30'	50'
538BNX, BPX, BEX	65'	150'	200'

Notes

1. Vert Lift is Fan Coil above Condenser
2. Vert Drop is Fan Coil below Condenser

Table #2 - Fitting Losses in Equivalent Feet

Tube Size O.D. (in)	90 deg Short Radius	90 deg Long Radius	45 deg Short Radius
5/8	1.6	1.0	0.8
3/4	1.8	1.2	0.9
7/8	2.0	1.4	1.0
1-1/8	2.6	1.7	1.3

Table #3 - Effective Capacity Loss

Nominal Capacity	Std Vapor Line	Long Vapor Line *	Percent of cooling capacity loss						
			50 ft	75 ft	100 ft	125 ft	150 ft	175 ft	200 ft
18,000	5/8	5/8	2	4	6	7	9	10	12
		3/4	0	0	1	2	3	4	6
24,000	5/8	5/8	4	6	9	11	13	15	**
		3/4	0	1	2	3	4	5	6
30,000	5/8	5/8	5	9	12	15			
		3/4	0	0	2	3	4	6	
	3/4	3/4	2	3	4	5	7	8	10
		7/8	0	2	3	4	5	6	7
36,000	3/4	3/4	2	4	6	7	9	11	13
		7/8	0	2	3	4	5	6	7
	7/8	7/8	1	2	3	4	5	6	7
		1-1/8							
48,000	7/8	7/8	4	6	9	11	13	15	**
		1-1/8	1	2	3	4	5	6	7
60,000	1-1/8	7/8	4	7	9	11	13	15	**
		1-1/8	2	3	5	6	8	9	11

Notes

*** The vapor line diameter that may be selected for long line applications. If smaller vapor lines then are specified in the table are selected, a larger capacity loss will occur. If larger vapor linesare selected, refrigerent oil return will be impaired due to velocity loss.**

**** Not recommended due to excessive loss of capacity**

Table #4 - Calculation of Outdoor Piston Number

Outdoor Unit Above Indoor Unit	
Feet	**Piston Change**
0-50	0
51-75	+4
76-100	+6
101-125	+8
126-150	+10
Outdoor Unit Below Indoor Unit	
0-65	0

Calculation of Indoor Piston Number

Outdoor Unit Above Indoor Unit	
Feet	**Piston Change**
0-25	0
26-50	-3
51-75	-5
76-100	-7
101-125	-9
126-150	-10
Outdoor Unit Below Indoor Unit	
0-25	0
26-65	+4

Table #5 - Common Piston Sizes

Accurater	Chatleff	Accurater	Chatleff
-	32	65	65
-	33	67	67
35	35	-	68
-	36	70	70
-	37	-	71
38	38	73	73
	39	-	74
40	40	76	76
	41	78	78
42	42	80	80
	43	-	81
	45	82	82
46	-	84	84
-	47	86	86
49	49	88	88
-	51	-	89
52	52	90	90
-	53	-	92
55	55	93	93
57	57	96	96
59	59	98	98
61	61	101	101
-	62	104	104
63	63	109	-

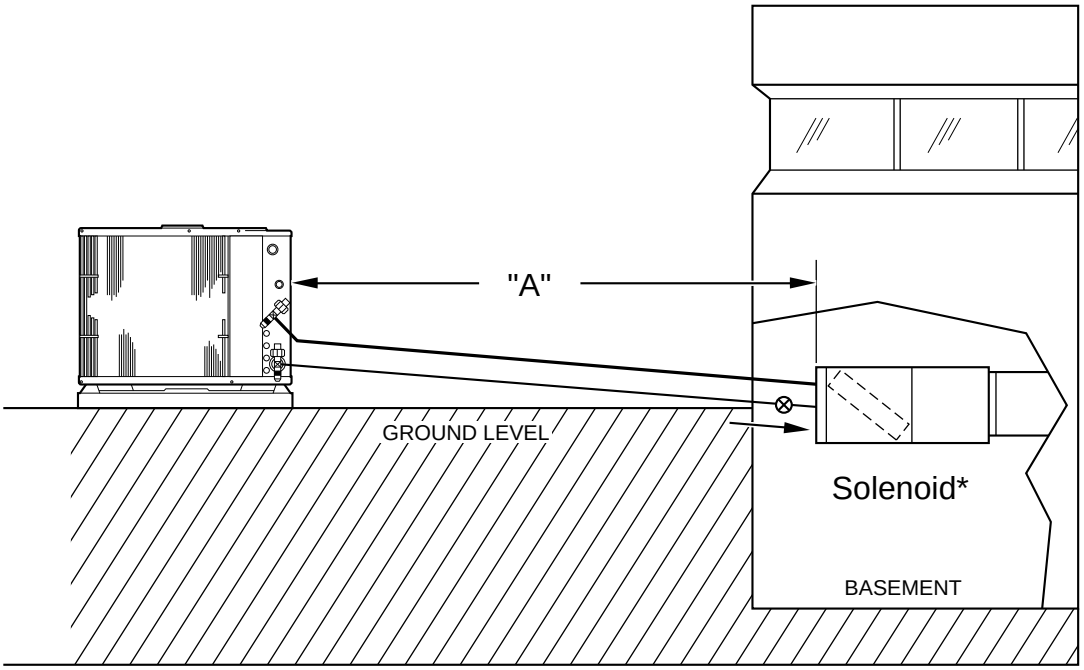

Diagram #1 * Not required for CAX009, CNX012, DAX009, DNX012, 38 C & S, 40 C

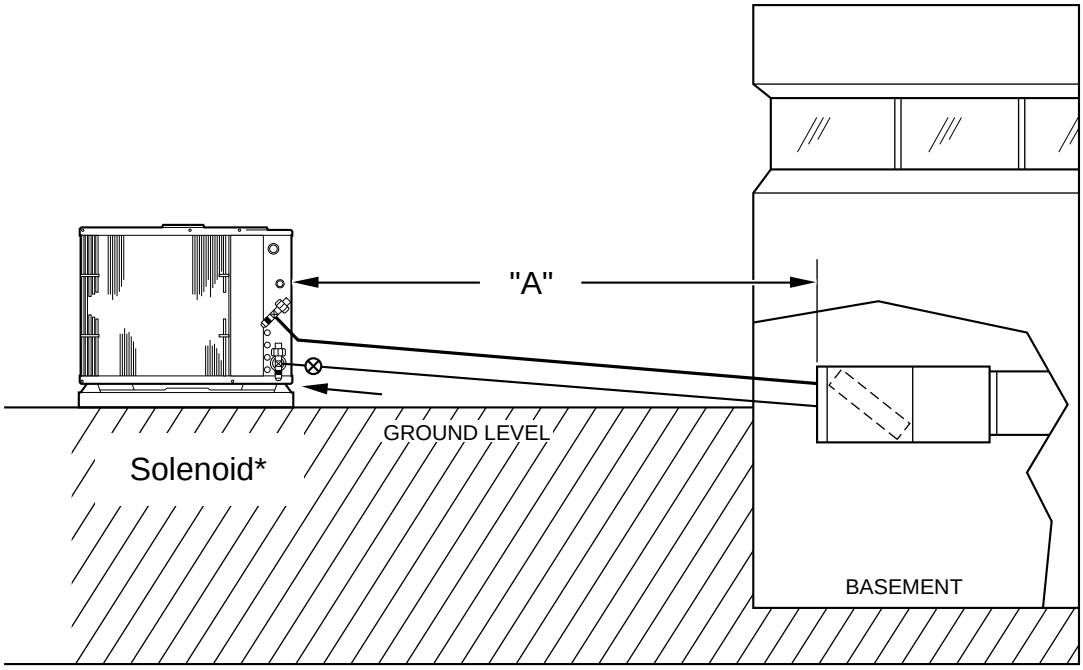

Diagram #2

* Not required for CAX009, CNX012, DAX009, DNX012, 38 C & S, 40 C

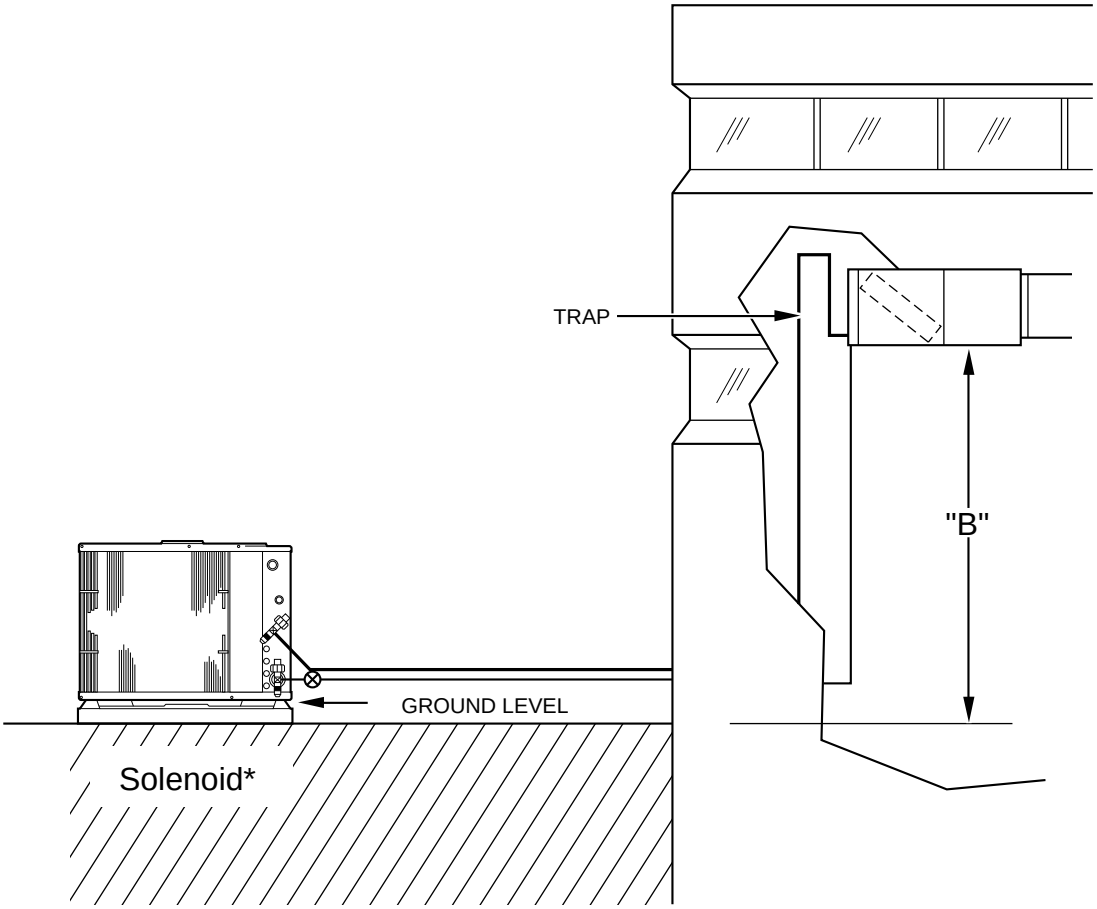

Diagram #3

*Not required for AN/BK009/012
38 C & S, 40 C

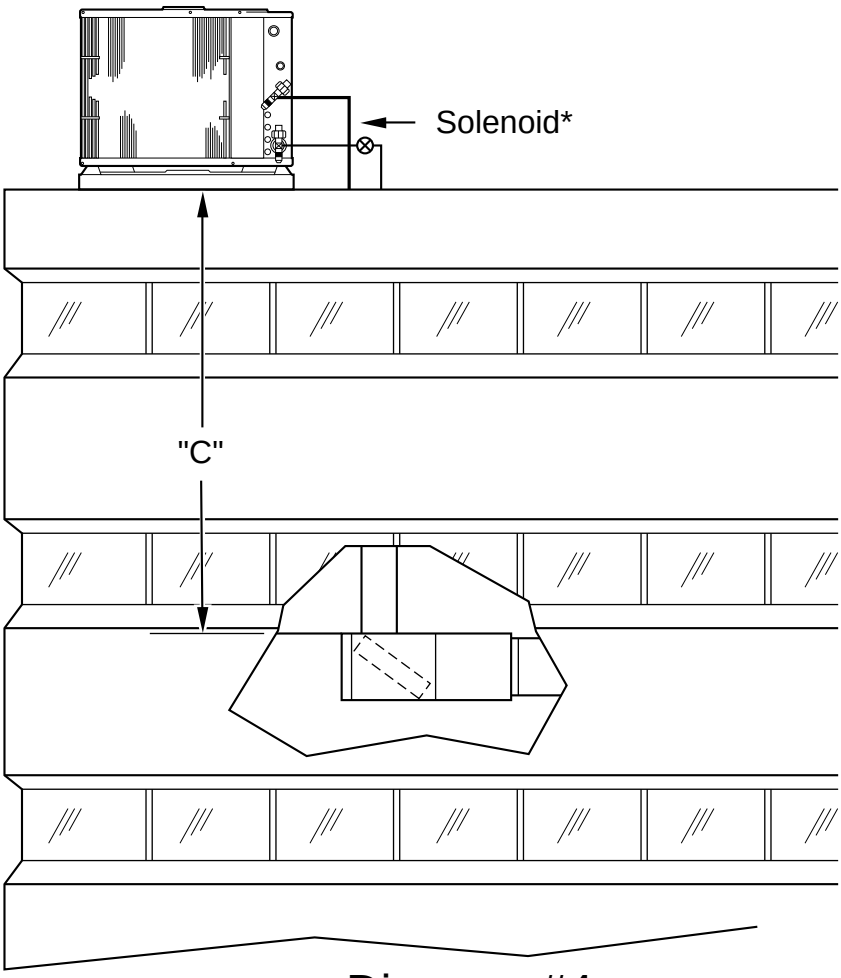

Diagram #4

* Not required for 38 C & S, 40 C Series

SELECTION PROCEDURE (With Example)

I Determine the type of fan coil, which best suits the application (refer to Systems Index table in the Expanded Rating Section #13).

Duct-free split systems have many types of fan coils to choose from with overlapping capacities. Select the system type, which best meets the job conditions. This example will use a 2-ton ceiling-suspended fan coil (assume wall space is not available for a wall-mounted unit).

II Determine cooling and heating load requirements at design conditions.

Required Load Conditions:

Required Cooling Capacity (TCG)	24,500 Btuh
Sensible Heat Capacity (SHG)	16,800 Btuh
Temperature Air Entering Outdoor Unit	95F
Temperature Air Entering Indoor Unit (EAT)	82Fdb/68 F wb
Required Heating Capacity	8,500 Btuh
Indoor Heating Design Conditions	68F
Outdoor Heating Design Conditions	0°F

db — dry bulb
wb — wet bulb

III Select system that satisfies load requirements.

Enter the Systems Index table (Section 13) ceiling-suspended system for 24,000 Btuh, and select the system that best approximates cooling and heating requirements. System index no. 20C & 20H with a nominal net capacity of 24,000 Btuh cooling and 22,600 Btuh heating is the system selected. The system consists of a 538B--024 outdoor unit matched with a 619C--024 indoor unit.

IV Determine if system selected satisfies cooling requirements.

Enter Expanded Rating table 20C, at high speed (550 cfm) and 95 F outdoor entering air temperature (air entering condenser). By interpolation, at 68 F EAT, the system gross capacity is 24,900 Btuh cooling [(26,500 – 24,500) x (1/5) + 24,500], and 15,740 Btuh SHG (gross sensible capacity). Adjust the SHG in accordance with Note 2 of the Gross Cooling Capacities table, using the correction factor for an 82 F edb (air entering dry bulb), and a 0.03 BF (bypass factor). The result is an adjusted SHG of 16,877 Btuh. The total gross cooling capacity of 24,900 Btuh and the sensible heat capacity of 16,877 Btuh satisfy stipulated cooling load requirements.

V Determine if system selected satisfies heating requirements.

Enter Instantaneous and Integrated Heating Ratings table #20H at 0° F outdoor db. By interpolation, the system capacity is between 65 and 70 F for integrated heating [-(7320 - 7710) x (2/5) + 7320 = 7476]. This is the value that reflects the net room effects after defrost energy. This value is short of the required heating capacity, however, the 40QAE units have a standard electric heater which will work in conjunction with heat pump heating (booster heat mode). The 619C--024 units have a 2 kw heater that will add 6824 Btuh (2 × 3412) to the room for a total heating capability of 14,300 Btuh at design heating conditions. This will satisfy the required heating load.

VI Determine net cooling capacity and system energy efficiency ratio.

Determine net cooling capacity (refer to Cooling Capacity table for System 20C). Net total cooling capacity must be interpolated as follows: (26,000 - 24,000) x (1/5) + 26,000 = 26,400 Btuh. To determine the energy efficiency ratio (EER), system kW must be interpolated from the Cooling Capacity table for System 20C in the same manner: (2.47 - 2.40) x (1/5) + 2.40 = 2.41 kw. Then calculate EER: Net Cooling Capacity / (kw x 1000) = EER: 26,400 / (2.41x1000) = 10.95 EER

NOTE: The SEER (Seasonal Energy Efficiency Ratio) CANNOT be calculated for this system. SEER can only be found as a direct result of testing at specified ARI conditions. See ARI Capacities Section.

VII Determine COP (coefficient of performance) at the design point.

To calculate the COP at the design point, interpolate capacity as in Step V to arrive at a capacity of 7476. Interpolate the kw between 1.63 and 1.62 to be 1.625. COP =(7476 / (1.625 × 3.412)) / 1000 = 1.348
NOTE: The HSPF (heating seasonal performance factor) CANNOT be calculated for this system. HSPF can only be found as a direct result of testing at specified ARI conditions. See ARI Capacities Section.

VIII Determine the recommended liquid and vapor line sizes.

Refer to Refrigerant Lines section.

NOTE: With long-line applications, it may be necessary to adjust cooling capacity. See Refrigerant Lines & Long Line Application section for more details.

Application

Drawings – Section 17

619E009
619E012
619E018
619E024

Cooling & Heat Pump

DIMENSIONAL DRAWING, BASE UNIT — 619E009,012 FAN COIL UNITS

UNIT 619E__	WEIGHT		A		B		C	
	Lb	Kg	in.	mm	in.	mm	in.	mm
009	18.7	8.5	33.46	850	11.02	280	6.29	160
012	24.2	11.0	36.61	930	11.81	300	7.28	185

NOTES:
1. Dimensions are in inches. Dimensions in [ ] are in millimeters.
2. ➡ Direction of airflow.
3. Refrigerant, drain and power connections may be made rear, left side or right side.
4. Refrigerant is metered by capillary tubes in the outdoor unit. Insulate both refrigerant lines.
5. Clearances of 3½″ on top and to the left of the fan coil unit are absolute minimums. Clearances of 10″ are recommended.

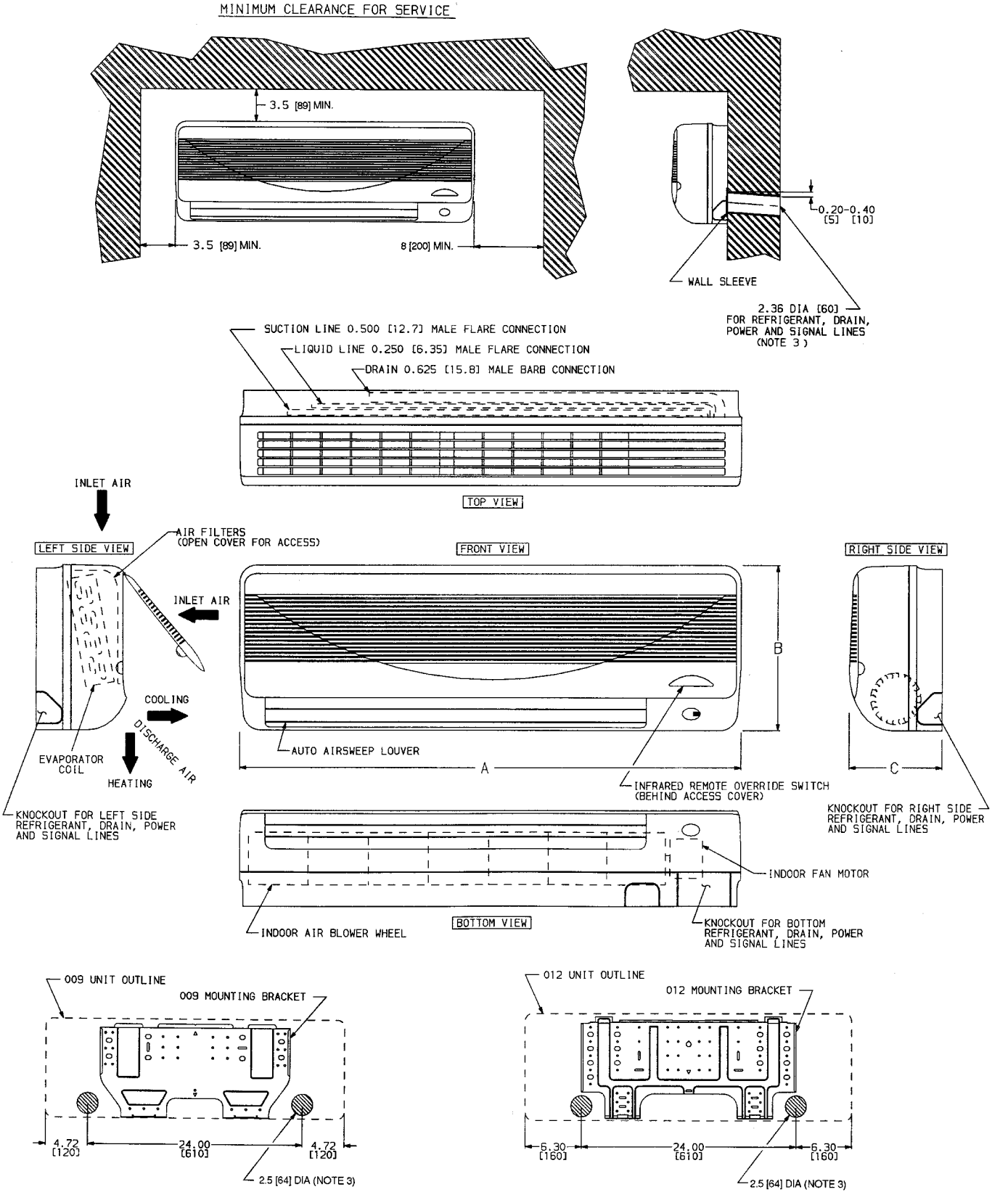

DIMENSIONAL DRAWING, BASE UNIT — 619E018,024 FAN COIL UNITS

UNIT 619E__	WEIGHT
018	39 Lb [17.5 Kg]
024	43 Lb [19.5 Kg]

NOTES:
1. Dimensions in [ ] are in millimeters.
2. ➡ Direction if airflow.
3. Refrigerant, drain, and power connections may be made in unit rear, bottom, left side, or right side.
4. Refrigerant is metered by AccuRater® device at the fan coil unit on 538A and 538D018,024 applications. A thermostatic expansion valve is used in the outdoor unit on 538S applications. Insulate both refrigerant lines on 538S and 538D018,024 applications.
5. The 4″ top and left clearances are absolute minimums. Clearances of 10″ are recommended.

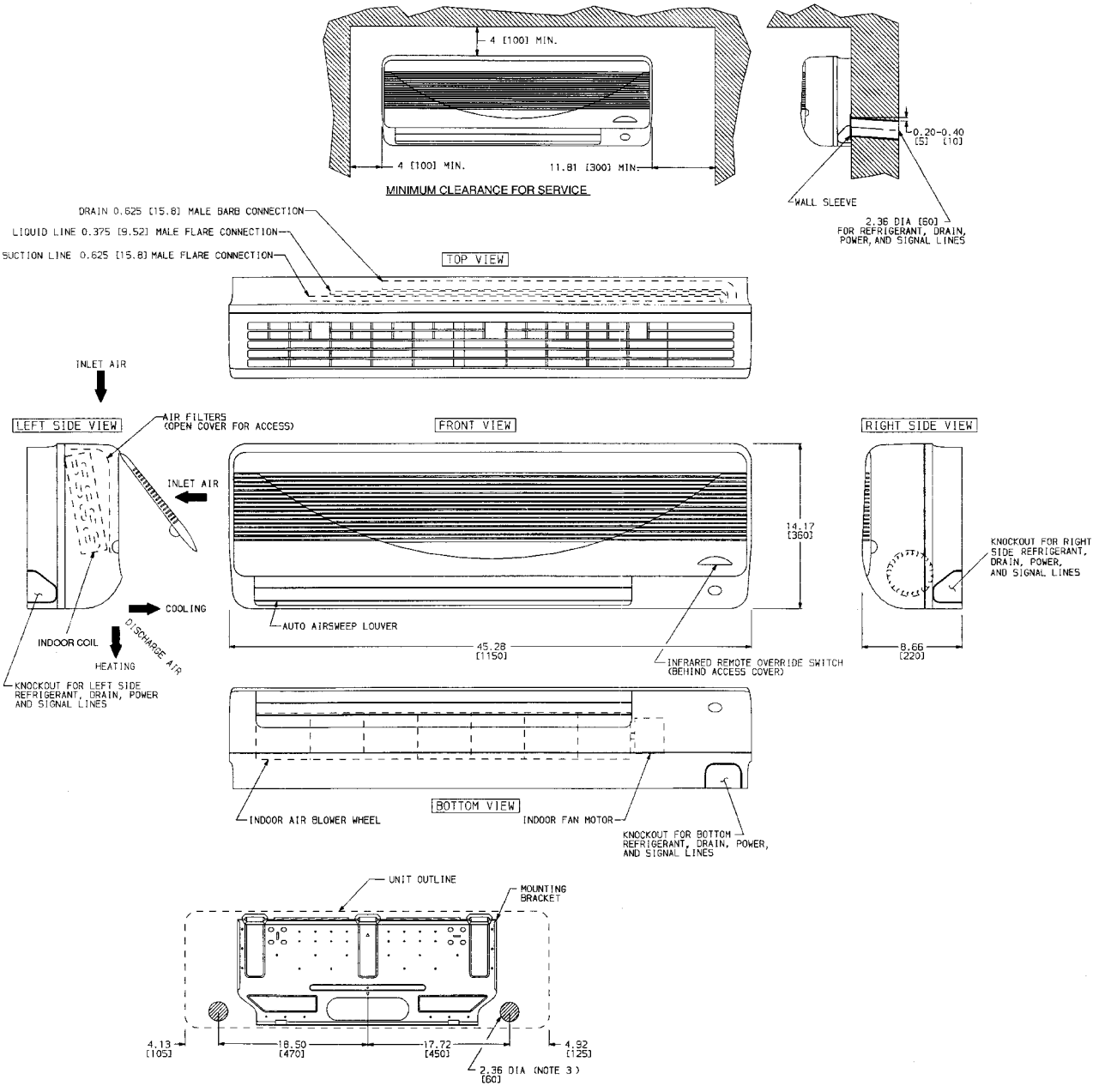

Application

Drawings – Section 17

619C024
619C036
619C048
619C060

Cooling & Heat Pump

NOTES:

1. Dimensions in [ ] are in millimeters.
2. ➡ Direction of airflow.
3. Standard unit clearances are as follows:
   - 0″ on top and rear
   - 3″ on left side
   - 12″ on right side
   - 36″ on bottom

(When facing unit discharge)

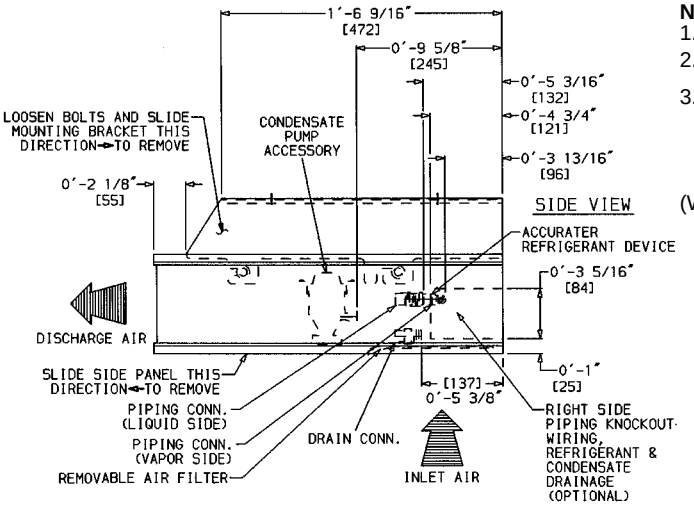

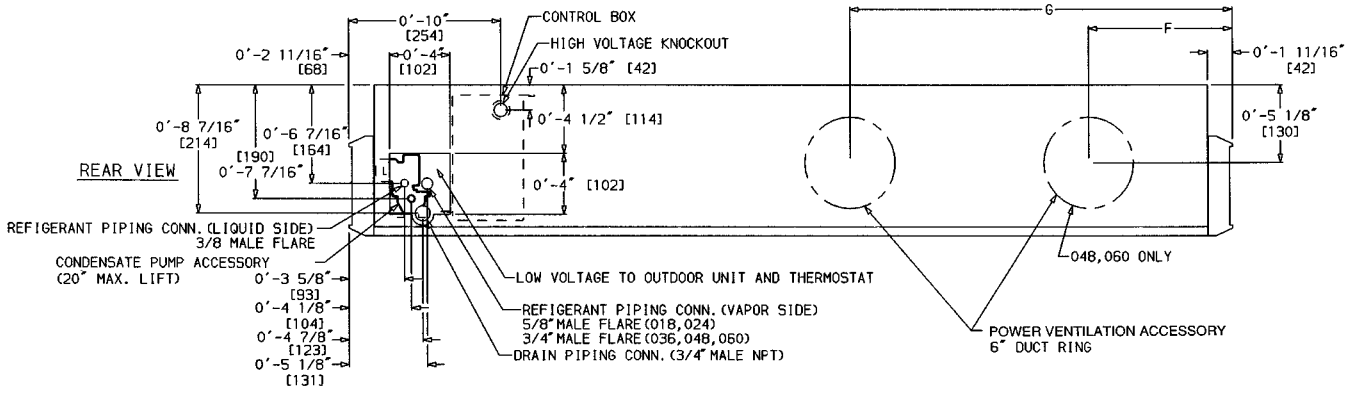

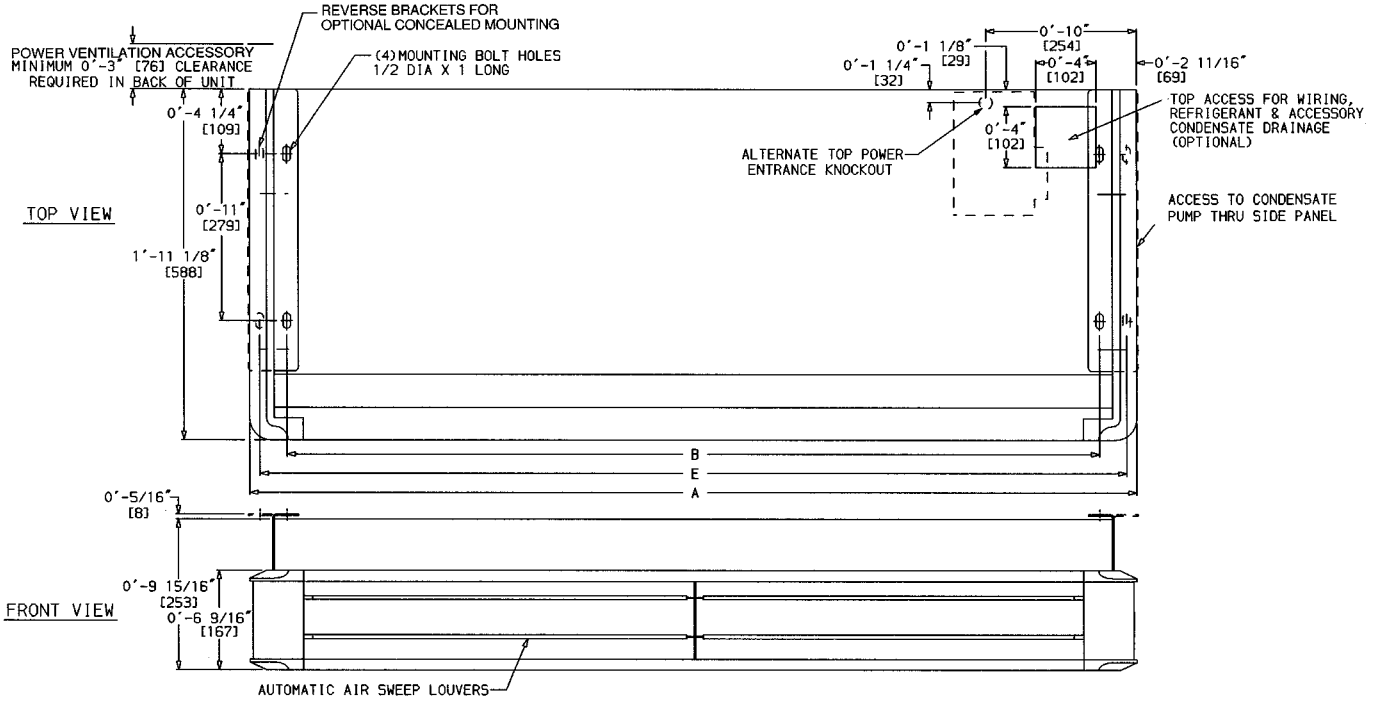

UNIT 619C_	WEIGHT (lb)		A		B		E		F		G	
	Cooling Only	Heat Pump	ft-in.	mm	ft-in.	mm	ft-in.	mm	ft-in.	mm	ft-in.	mm
024	108	110	4- 2 15/16	1294	3-10	1169	4- 1 5/8	1260	—	—	1- 9 5/8	549
036	117	119	4-10 13/16	1493	4- 5 7/8	1368	4- 9 1/2	1459	—	—	2- 1 1/2	648
048	149	151	5-11 9/16	1817	5- 6 5/8	1692	5-10 1/4	1783	1- 9 7/8	555	3- 3 1/16	992
060	179	181	7- 8	2336	7- 3	2211	7- 6 5/8	2302	1-11 5/8	601	4-11 9/16	1512

619C Base Unit Dimensions

Application

Drawings – Section 17

619F024
619F036
619F048

Cooling & Heat Pump

UNIT 619F–	OPERATING WEIGHT	
	Lb	Kg
024	61.6	28

NOTES:

1. ⇨ indicates airflow.
2. Dimensions in [ ] are in millimeters.
3. Service clearance is 2 ft on control box side, 0 in. all other sides.
4. Air discharge slots are adjustable; one or 2 may be closed to direct air in the desired direction.
5. Grille is shipped separately from unit.
6. Condensate pump has 20-in. lift capability.
7. AccuRater® device(s) is a required field-installed accessory for 538A and 538B systems. It is not required for 538S systems.

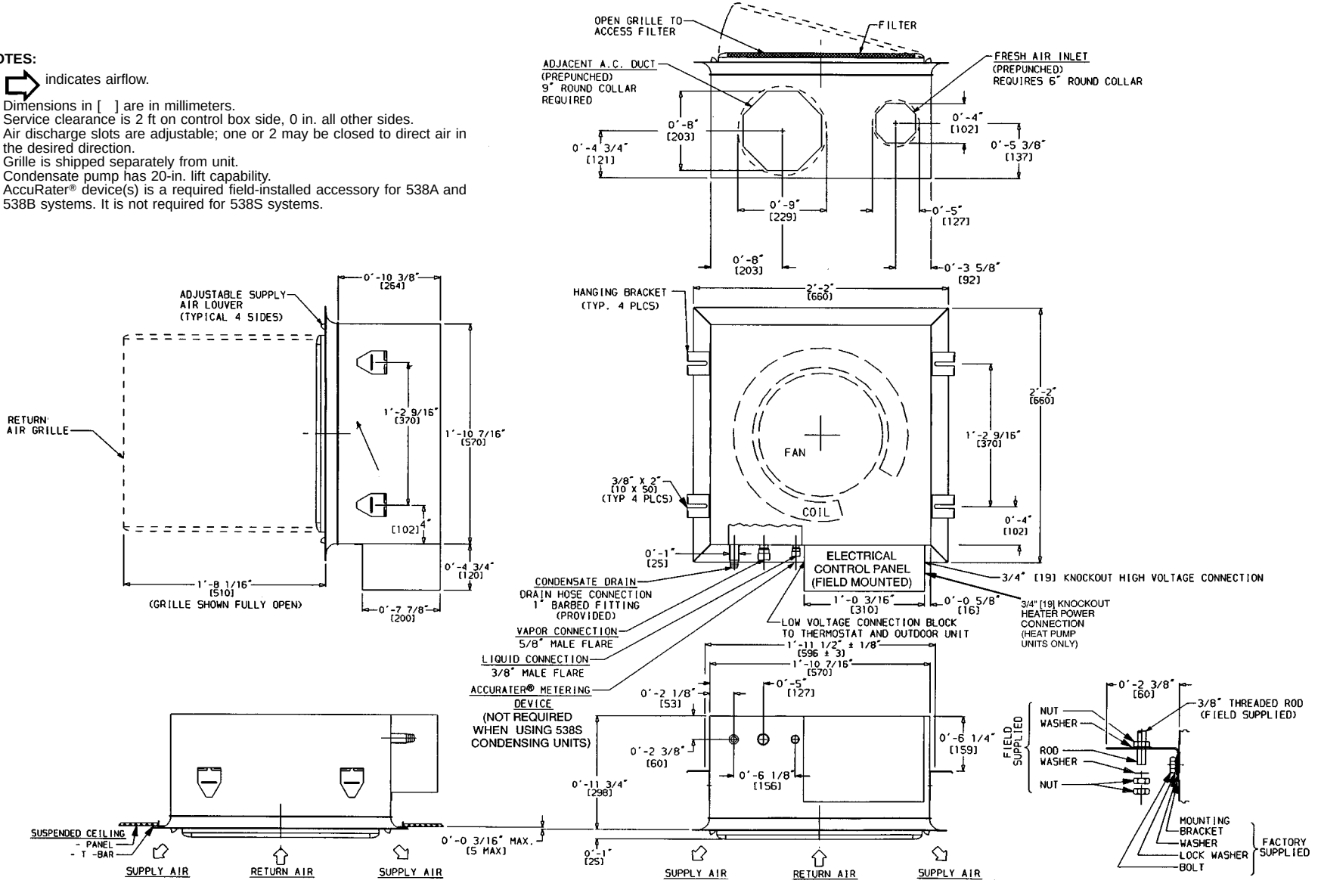

Base Unit Dimensional Drawing, 619F–024

UNIT 619F–	OPERATING WEIGHT	
	Lb	Kg
036	105.8	48
048*	118.0	53

*OWO heat pump fan coil units only.

NOTES:

1. ⇨ Indicates airflow.
2. Dimensions in [ ] are in millimeters.
3. Service clearance is 2 ft on control box side, 0 in. all other sides.
4. Air discharge slots are adjustable; one or 2 may be closed to direct air in the desired direction.
5. Grille is shipped separately from unit.
6. Condensate pump has 20-in. lift capability.
7. AccuRater® device(s) is a required field-installed accessory for 538A and 538B systems. It is not required for 538S systems.

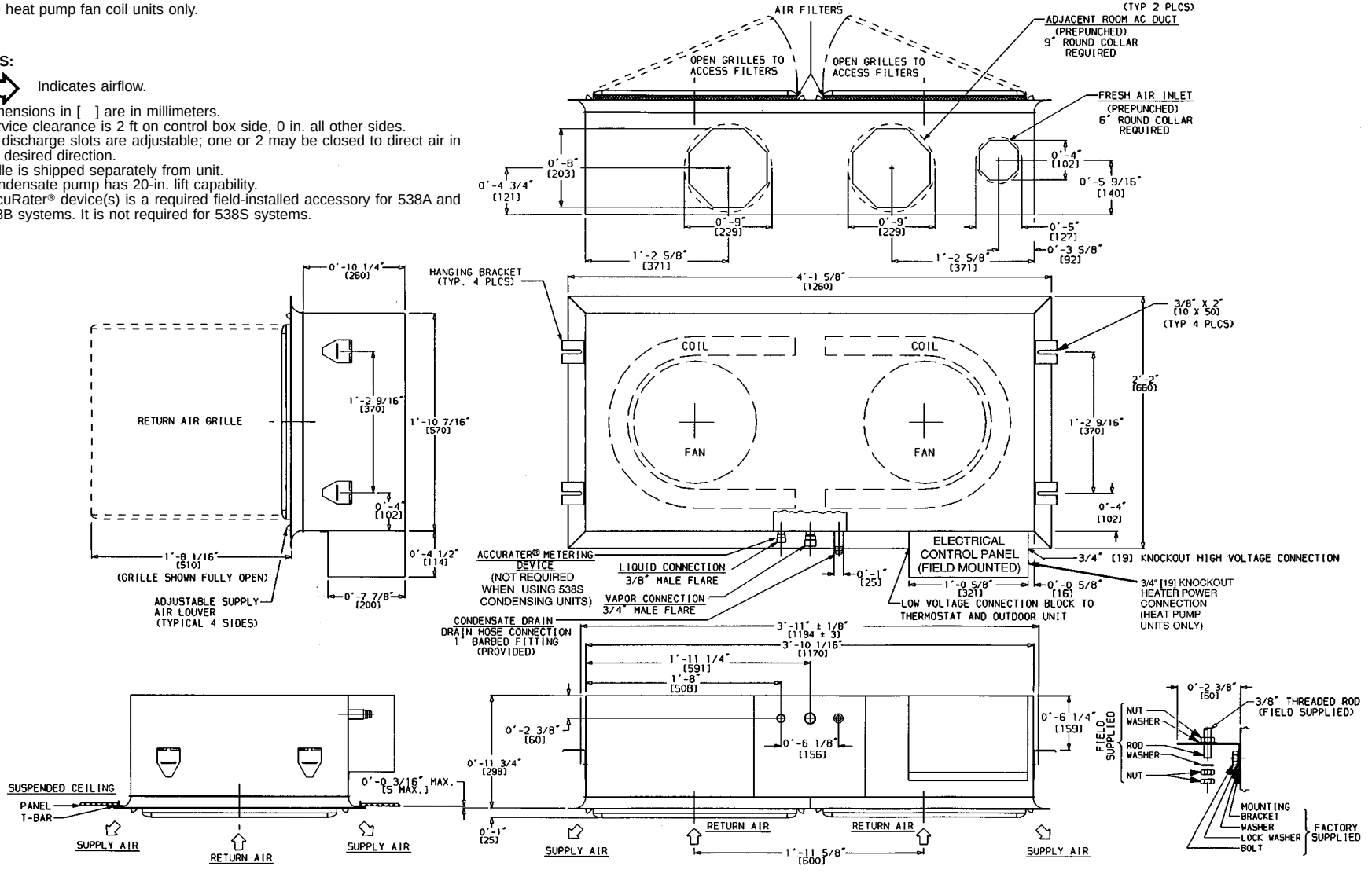

Base Unit Dimensional Drawing, 619F–036,048

Application

Drawings – Section 17

538A018	
538A024	
538A030	Cooling Only
538A036	
538A048	
538A060	
538B018	
538B024	
538B030	Heat Pump
538B036	
538B048	
538B060	
538C009	Cooling Only
538C012	
538D009	
538D012	Heat Pump
538D018	
538D024	
538S024	Cooling Only
538S048	
538J018	
538J024	
538J030	Cooling Only
538J036	
538J048	
538J060	

DIMENSIONAL DRAWING — BASE UNIT — 538A018-060 CONDENSING UNITS

UNIT 538A	A		B		C		D		E		F		G		H		J		K		L		M		N		R		S		OPERATING WT	
	ft-in.	mm	ft-in.	mm	ft-in.	mm	ft-in.	mm	ft-in.	mm	ft-in.	mm	ft-in.	mm	ft-in.	mm	ft-in.	mm	ft-in.	mm	ft-in.	mm	ft-in.	mm	ft-in.	mm	ft-in.	mm	ft-in.	mm	Lb	kg
018	2-1⅛	638.2	3-0 15/16	938.2	1-2 9/16	369.9	1-4	406.4	1-11 7/16	595.3	1-5 3/16	436.6	1-5½	444.5	1-8⅛	511.2	1-1¼	336.6	0-6⅝	168.3	0-10 13/16	274.6	0-0⅝	15.00	0-0⅜	9.52	0-4½	115.0	0-6½	166.0	150	68.0
024	2-1⅛	638.2	3-0 15/16	938.2	1-2 9/16	369.9	1-4	406.4	1-11 7/16	595.3	1-5 3/16	436.6	1-5½	444.5	1-8⅛	511.2	1-2 7/16	366.7	0-6¾	171.4	1- 0	304.8	0-0⅝	15.00	0-0⅜	9.52	0-4½	115.0	0-6½	166.0	154	69.0
030	2-1⅛	638.2	3-0 15/16	938.2	1-2 9/16	369.9	1-4	406.4	1-11 7/16	595.3	1-5 3/16	436.6	1-5½	444.5	1-8⅛	511.2	1-1	330.2	0-6¾	171.4	0-11⅝	295.3	0-0¾	19.05	0-0⅜	9.52	0-4½	115.0	0-6½	166.0	169	76.6
036	2-1⅛	638.2	3-0 15/16	938.2	1-2 9/16	369.9	1-4	406.4	1-11 7/16	595.3	1-5 3/16	436.6	1-5½	444.5	1-8⅛	511.2	1-0 11/16	322.3	0-6¾	171.4	0-11⅞	301.6	0-0⅞	22.22	0-0⅜	9.52	0-4½	115.0	0-6½	166.0	179	81.2
048	3-1 3/16	944.6	3-8 9/16	1131.9	1-5 1/16	433.4	1-6 7/16	468.3	2- 6½	774.7	1-7⅝	498.5	2-5⅝	752.5	2-8 3/16	817.6	1-1 11/16	347.7	0-8⅛	206.4	1- 4⅛	409.6	0-0⅞	22.22	0-0⅜	9.52	0-4½	115.0	0-6½	166.0	270	122.4
060	3-1 3/16	944.6	3-8 9/16	1131.9	1-5 1/16	433.4	1-6 7/16	468.3	2- 6½	774.7	1-7⅝	498.5	2-5⅝	752.5	2-8 3/16	817.6	1-2¼	361.9	0-8⅛	206.4	1- 4½	419.1	0-0⅞	22.22	0-0⅜	9.52	0-4½	115.0	0-6½	166.0	290	131.5

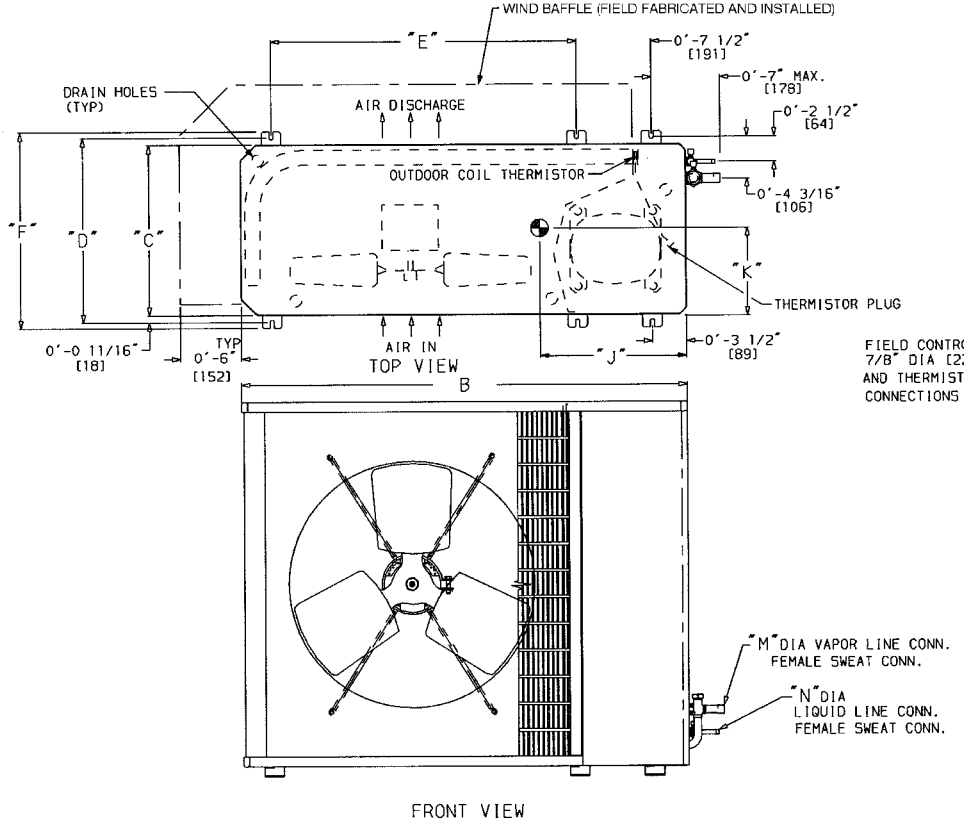

UNIT SIZE	MINIMUM MOUNTING PAD DIMENSIONS					
	Support Feet		Snow Stand		Ice Stand	
	ft-in.	mm	ft-in.	mm	ft-in.	mm
018,024,030,036	1-11 x 3-6	584.2 x 1066.8	2-2 x 3-6	660.4 x 1066.8	2-2 x 3-6	660.4 x 1066.8
048,060	2-0 x 4-2	609.6 x 1270	2-4 x 4-4	711.2 x 1270.0	2-3 x 4-2	660.4 x 1270.0

NOTES:

1. Required clearances, with coil facing wall, allow 6 in. minimum clearance on coil side and coil end, and 3 ft minimum clearance on compressor end and fan side. With fan facing wall, allow 8 in. minimum clearance on fan side and coil end, and 3 ft minimum clearance on compressor end and coil side. With multi-unit application, arrange units so discharge of one does not enter inlet of another.
2. Dimensions in parenthesis are in millimeters.
3. Center of Gravity.
4. Thermistors used with 619C and 619D fan coils only.

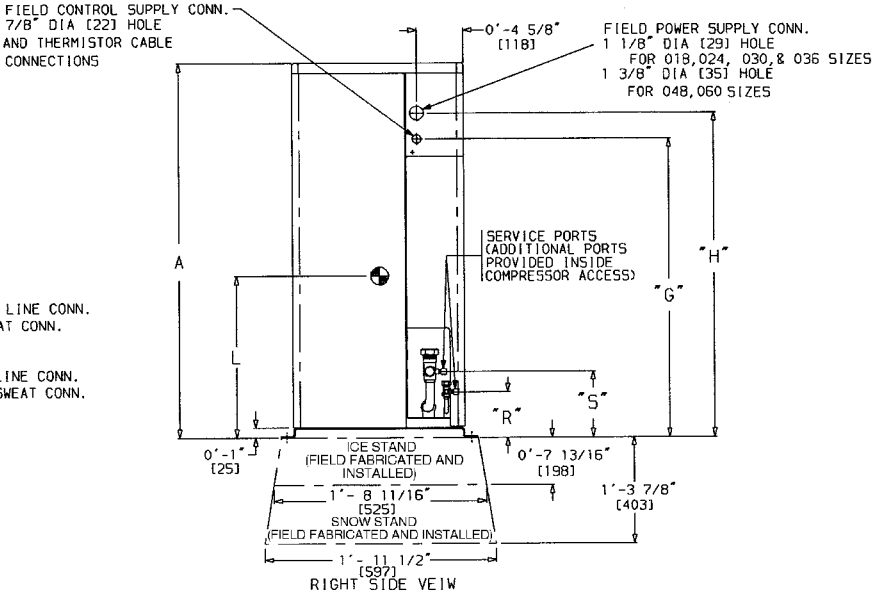

UNIT 538B–	A		B		C		D		E		F		G		H		J		K		L		M		OPERATING WEIGHT	
	ft-in.	mm	ft-in.	mm	ft-in.	mm	ft-in.	mm	ft-in.	mm	ft-in.	mm	ft-in.	mm	ft-in.	mm	ft-in.	mm	ft-in.	mm	ft-in.	mm	ft-in.	mm	lb	Kg
018	2-1⅛	638.2	3-0 15/16	938.2	1-2 9/16	369.9	1-4	406.4	1-11 7/16	595.3	1-5 3/16	436.6	1-5½	444.5	1-8⅛	511.2	1-1	330.2	0-6⅝	168.3	0-11¼	285.8	0-0⅝	15.88	154	69.8
024	2-1⅛	638.2	3-0 15/16	938.2	1-2 9/16	369.9	1-4	406.4	1-11 7/16	595.3	1-5 3/16	436.6	1-5½	444.5	1-8⅛	511.2	1-1	330.2	0-6¾	171.5	0-11⅝	295.3	0-0⅝	15.88	167	75.7
030	2-1⅛	638.2	3-0 15/16	938.2	1-2 9/16	369.9	1-4	406.4	1-11 7/16	595.3	1-5 3/16	436.6	1-5½	444.5	1-8⅛	511.2	1-1	330.2	0-6¾	171.5	0-11⅝	295.3	0-0¾	19.05	180	81.6
036*	2-1⅛	638.2	3-0 15/16	938.2	1-2 9/16	369.9	1-4	406.4	1-11 7/16	595.3	1-5 3/16	436.6	1-5½	444.5	1-8⅛	511.2	1-1	330.2	0-6¾	171.5	0-11⅝	295.3	0-0¾	19.05	184	83.5
036†	3-1 3/16	944.6	3-8 9/16	1131.9	1-5 1/16	433.4	1-6 7/16	468.3	2-6½	774.7	1-7⅝	498.5	2-5⅝	752.5	2-8 3/16	817.6	1-1⅞	352.4	0-8¼	209.5	1- 4	406.4	0-0¾	19.05	249	112.9
048	3-1 3/16	944.6	3-8 9/16	1131.9	1-5 1/16	433.4	1-6 7/16	468.3	2-6½	774.7	1-7⅝	498.5	2-5⅝	752.5	2-8 3/16	817.6	1-1 11/16	347.7	0-8⅛	206.4	1- 3⅞	403.2	0-0⅞	22.22	252	114.3
060	3-1 3/16	944.6	3-8 9/16	1131.9	1-5 1/16	433.4	1-6 7/16	468.3	2-6½	774.7	1-7⅝	498.5	2-5⅝	752.5	2-8 3/16	817.6	1-2½	368.3	0-8⅛	206.4	1- 3⅞	403.2	0-0⅞	22.22	272	123.4

LEGEND

CONN — Connection

*Single-phase.
†3-phase.

UNIT SIZE	MINIMUM MOUNTING PAD DIMENSIONS					
	Support Feet		Snow Stand		Ice Stand	
	ft-in.	mm	ft-in.	mm	ft-in.	mm
018,024,030,036*	1-11 x 3-6	584.2 x 1066.8	2-2 x 3-6	660.4 x 1066.8	2-2 x 3-6	660.4 x 1066.8
036†,048,060	2- 0 x 4-2	609.6 x 1270	2-4 x 4-4	711.2 x 1270.0	2-2 x 4-2	660.4 x 1270.0

NOTES:

1. Required clearances, with coil facing wall; allow 6 in. minimum clearance on coil side and coil end, and 3 ft minimum clearance on compressor end and fan side. With fan facing wall; allow 8 in. minimum clearance on fan side and coil end, and 3 ft minimum clearance on compressor end and coil side. With multi unit application; arrange units so discharge of one does not enter inlet of another.
2. Dimensions in [ ] are in millimeters.
3. Center of gravity.
4. Thermistors used with 619D and 619C fan coils only.

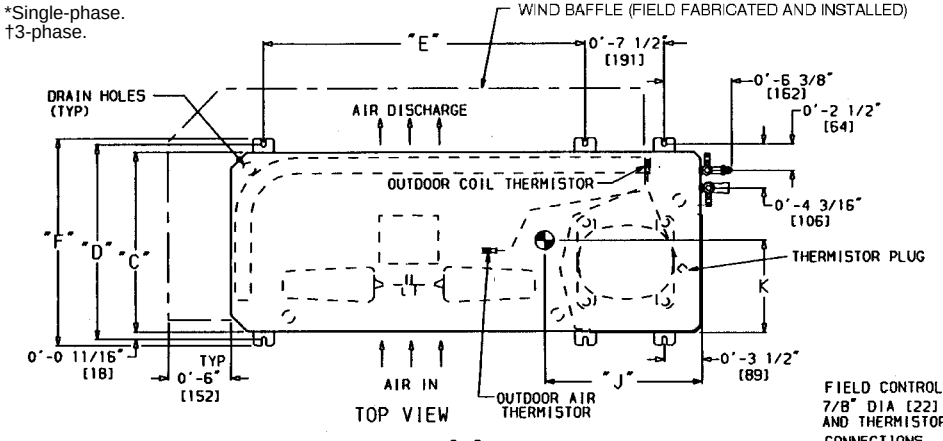

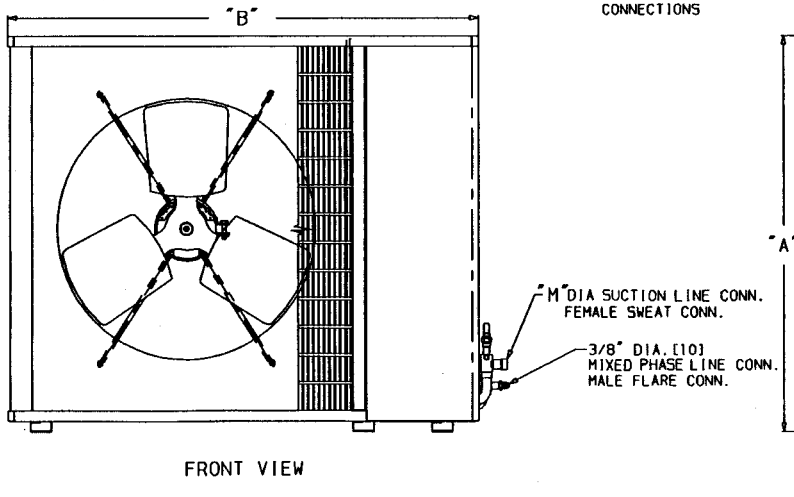

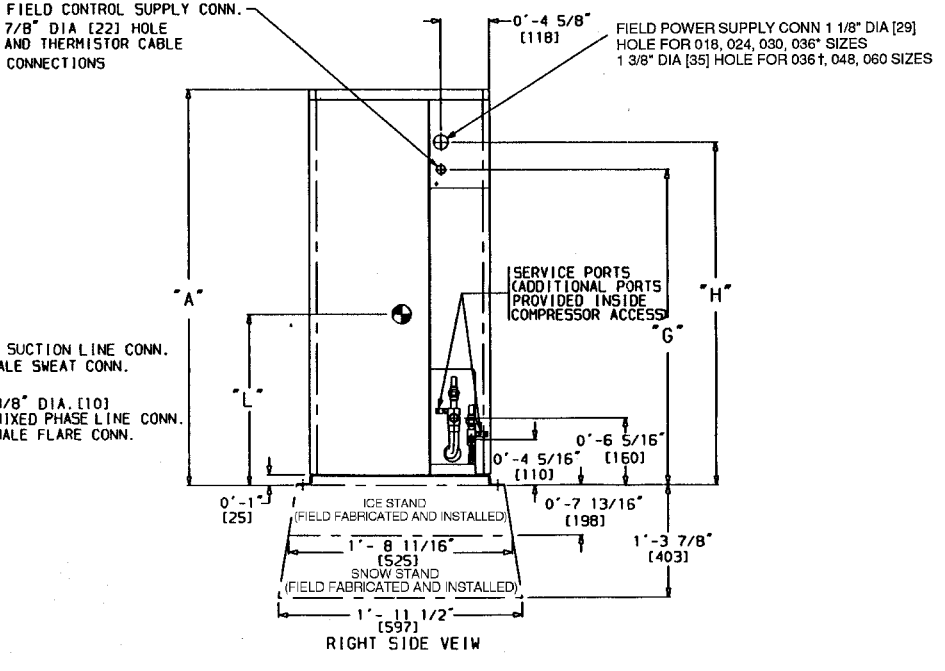

DIMENSIONAL DRAWING, BASE UNIT — 538C/D009,012 COOLING ONLY AND HEAT PUMP UNITS

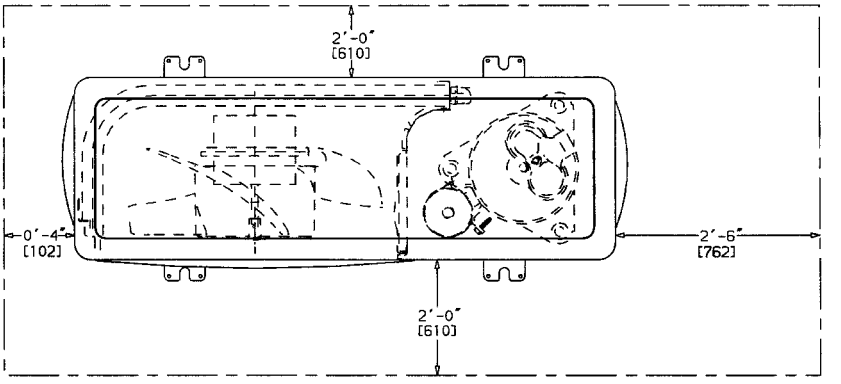

NOTES:
1. Dimensions in [ ] are in millimeters.
2. Direction of airflow.
3. Center of gravity.
4. Minimum clearances, 4 in. on coil sides, 24 in. on fan side, and 30 in. service side.

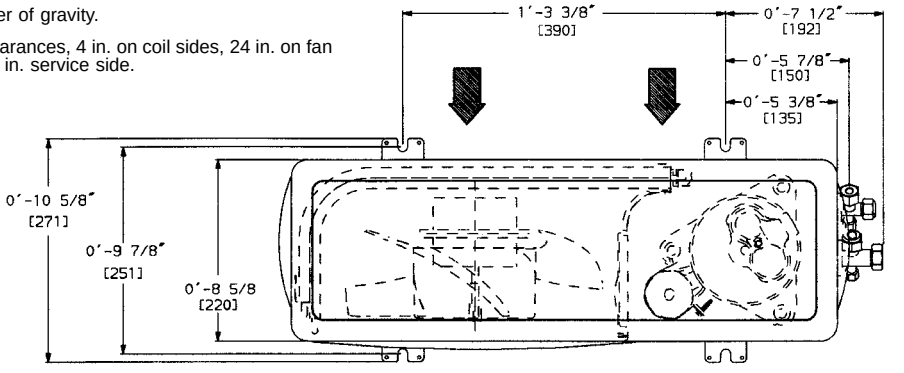

TOP VIEW

UNIT 538	WEIGHT	
	Lb	Kg
C__009	55.0	25.0
C__012	62.0	28.1
D__009	60.7	27.5
D__012	66.5	30.2

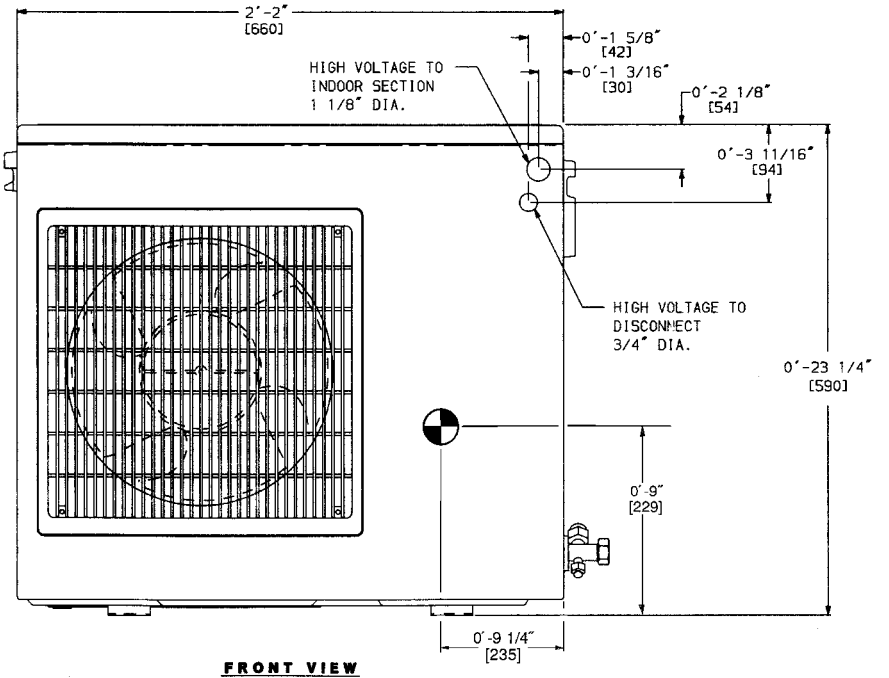

FRONT VIEW

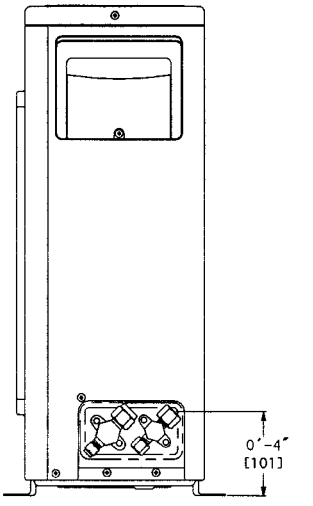

RIGHT SIDE VIEW

DIMENSIONAL DRAWING, BASE UNIT — 538D018,024 HEAT PUMP UNITS

UNIT 538D__	A		B		C		D		E		F	
	ft-in.	mm	ft-in.	mm	ft-in.	mm	ft-in.	mm	ft-in.	mm	ft-in.	mm
018	2-1⅛	638.2	3-0 15/16	938.2	1-2 9/16	369.9	1-4	406.4	1-11 7/16	595.3	1-5 3/16	436.6
024	2-1⅛	638.2	3-0 15/16	938.2	1-2 9/16	369.9	1-4	406.4	1-11 7/16	595.3	1-5 3/16	436.6

UNIT 538D__	G		H		J		K		L		M		OPERATING WEIGHT	
	ft-in.	mm	ft-in.	mm	ft-in.	mm	ft-in.	mm	ft-in.	mm	ft-in.	mm	lb	Kg
018	1-5½	444.5	1-8⅛	511.2	1-1	330.2	0-6⅝	168.3	0-11¼	285.8	0-0⅝	15.88	154	69.8
024	1-5½	444.5	1-8⅛	511.2	1-1	330.2	0-6¾	171.5	0-11⅝	295.3	0-0⅝	15.88	167	75.7

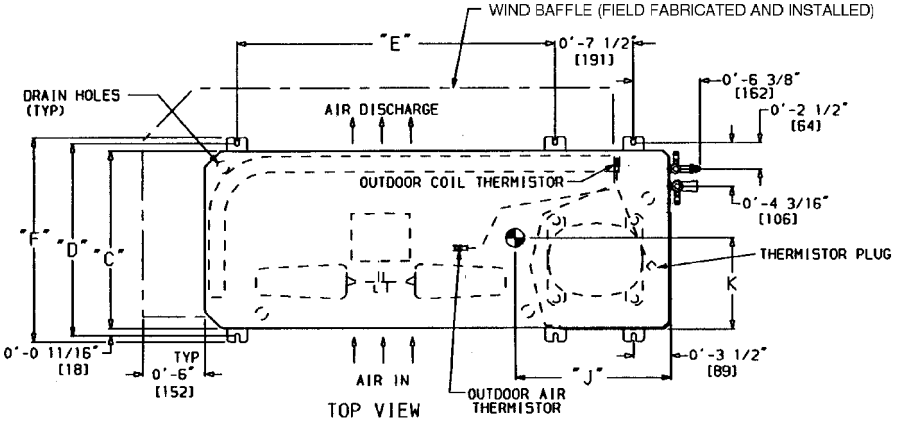

LEGEND

CONN — Connection

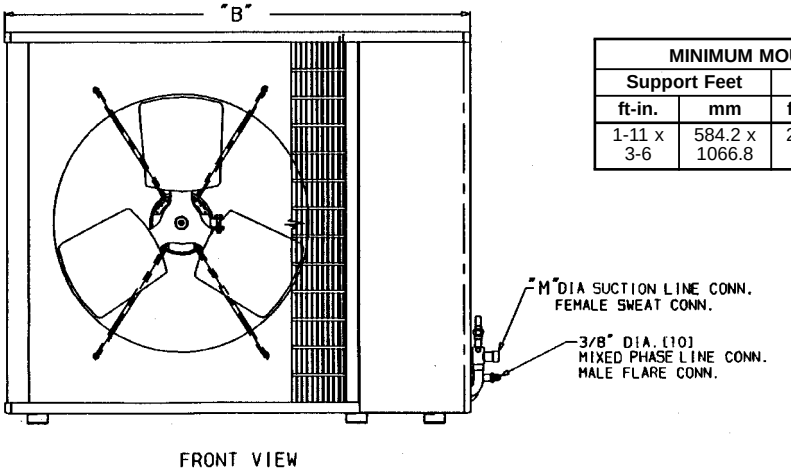

MINIMUM MOUNTING PAD DIMENSIONS					
Support Feet		Snow Stand		Ice Stand	
ft-in.	mm	ft-in.	mm	ft-in.	mm
1-11 x 3-6	584.2 x 1066.8	2-2 x 3-6	660.4 x 1066.8	2-2 x 3-6	660.4 x 1066.8

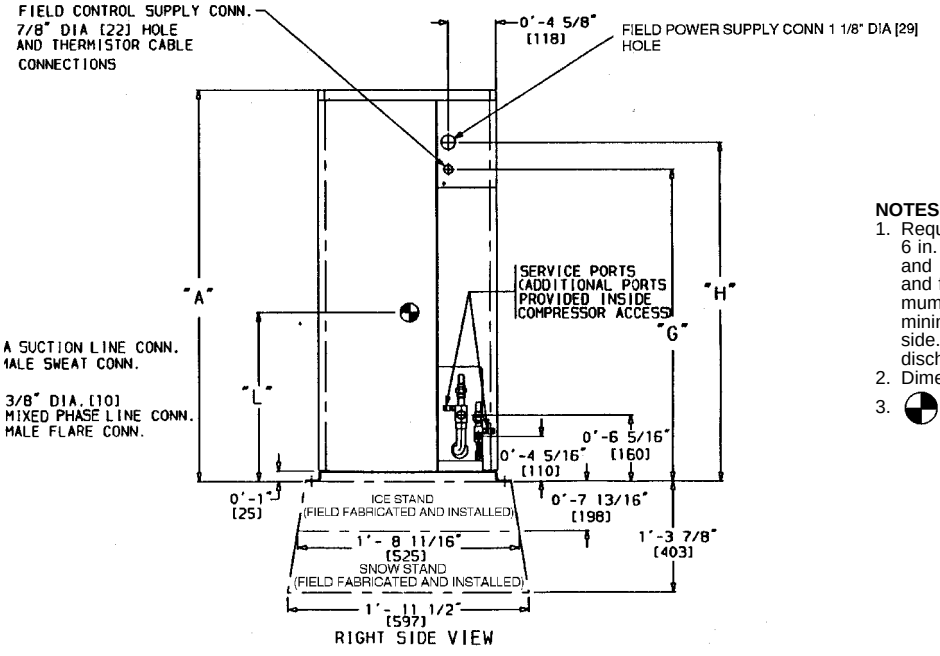

NOTES:

1. Required clearances, with coil facing wall; allow 6 in. minimum clearance on coil side and coil end, and 3 ft minimum clearance on compressor end and fan side. With fan facing wall; allow 8 in. minimum clearance on fan side and coil end, and 3 ft minimum clearance on compressor end and coil side. With multi-unit application; arrange units so discharge of one does not enter inlet of another.
2. Dimensions in [ ] are in millimeters.
3. Center of gravity.

DIMENSIONAL DRAWING, BASE UNIT — 538S CONDENSING UNITS

UNIT 538S__	A		B		C		D		E		F		G		H	
	Ft-in.	mm	Ft-in.	mm	Ft-in.	mm	Ft-in.	mm	Ft-in.	mm	Ft-in.	mm	Ft-in.	mm	Ft-in.	mm
024	2-1⅛	638	3-0 15/16	938	1-2 9/16	370	1-4	406	1-11 7/16	595	1-5 3/16	437	1-5½	445	1-8⅛	511
048	3-1 3/16	945	3-8 9/16	1132	1-5 1/16	433	1-6 7/16	468	2- 6½	775	1-7⅝	499	2-5⅝	753	2-8 3/16	818

UNIT 538S__	J		K		L		M		N		R		S		OPERATING WEIGHT	
	Ft-in.	mm	Ft-in.	mm	Ft-in.	mm	Ft-in.	mm	Ft-in.	mm	Ft-in.	mm	Ft-in.	mm	Lb	Kg
024	1-2 7/16	367	0-6¾	171	1-0	305	0-0⅝	16	0-0⅜	10	—	—	—	—	159	72.0
048	1-2¾	375	0-7½	191	1-6	457	0-0⅝	16	0-0⅜	10	0-6 5/16	160	0-5⅞	149	292	132.3

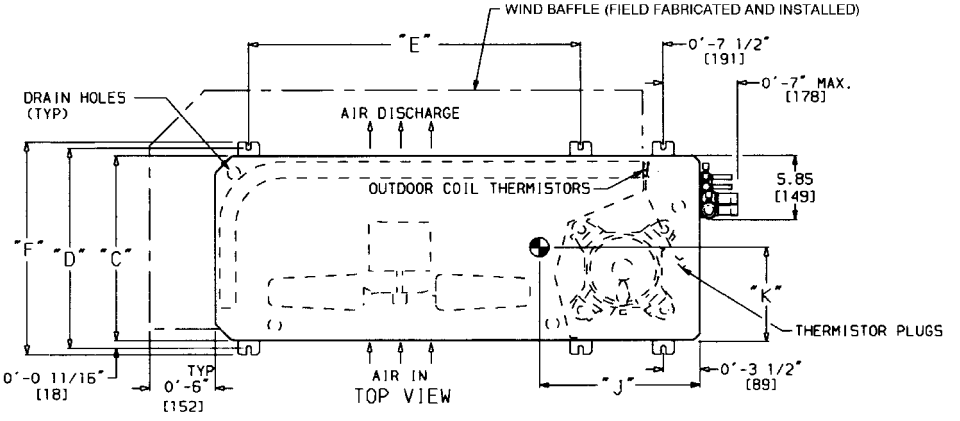

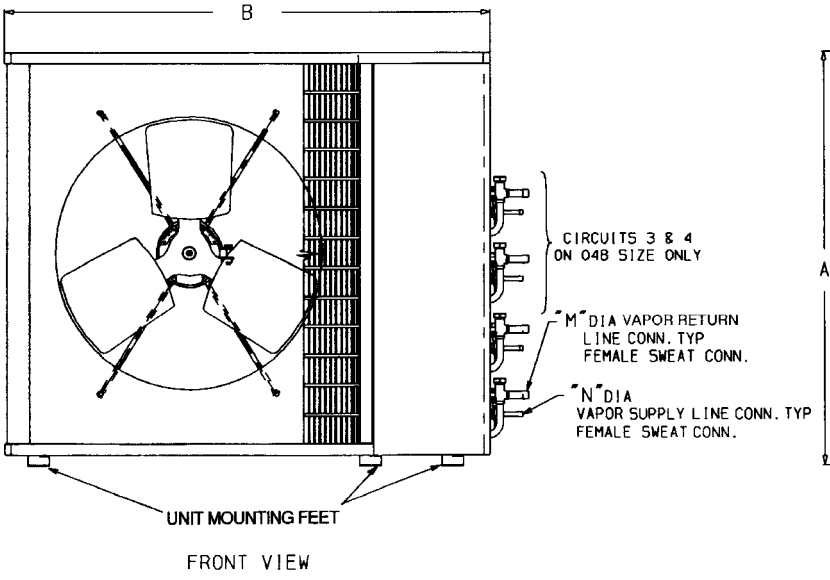

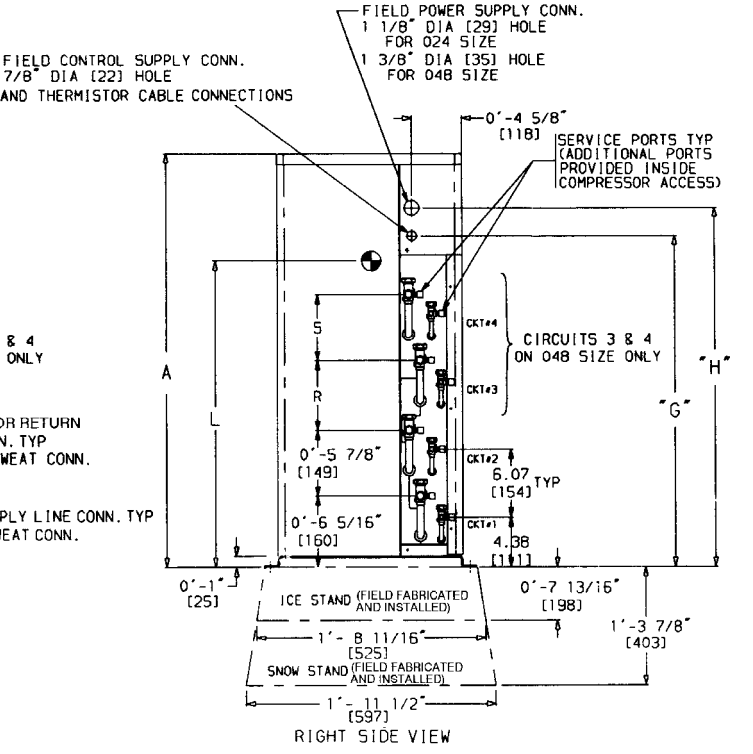

UNIT 538S__	MINIMUM MOUNTING PAD DIMENSIONS					
	SUPPORT FEET		SNOW STAND		ICE STAND	
	Ft-in.	mm	Ft-in.	mm	Ft-in.	mm
024	1-11 x 3-6	584 x 1067	2-2 x 3-6	660 x 1067	2-2 x 3-6	660 x 1067
048	2-0 x 4-2	610 x 1270	2-4 x 4-4	711 x 1270	2-2 x 4-2	660 x 1270

NOTES:

1. Required clearances: with coil facing wall; allow 6 in. minimum clearance on coil side and coil end, and 3 ft minimum clearance on compressor end and fan side. With fan facing wall; allow 8 in. minimum clearance on fan side and coil end, and 3 ft minimum clearance on compressor end and coil side. With multi-unit application: arrange units so discharge of one does not enter inlet of another.
2. Dimensions in [ ] are in millimeters.
3. ⊕ Center of gravity.

Base unit dimensions — 538JNX condensing units

UNIT SIZE	A		B		C		D		E		F		G		H		J		K		L		M		OPERATING WEIGHT	
	ft-in.	mm	ft-in.	mm	ft-in.	mm	ft-in.	mm	ft-in.	mm	ft-in.	mm	ft-in.	mm	ft-in.	mm	ft-in.	mm	ft-in.	mm	ft-in.	mm	ft-in.	mm	lb	kg
018	2-11 1/8	638.2	3-0 15/16	938.2	1-2 9/16	369.9	1-4	406.4	1-11 7/16	595.3	1-5 3/16	436.6	1-5 1/2	444.5	1-8 1/8	511.2	1-1	330.2	0-6 5/8	168.3	0-11 1/4	285.8	0-0 5/8	15.88	130	58.9
024	2-11 1/8	638.2	3-0 15/16	938.2	1-2 9/16	369.9	1-4	406.4	1-11 7/16	595.3	1-5 3/16	436.6	1-5 1/2	444.5	1-8 1/8	511.2	1-1	330.2	0-6 3/4	171.5	0-11 5/8	295.3	0-0 5/8	15.88	136	61.6
030	2-11 1/8	638.2	3-0 15/16	938.2	1-2 9/16	369.9	1-4	406.4	1-11 7/16	595.3	1-5 3/16	436.6	1-5 1/2	444.5	1-8 1/8	511.2	1-1	330.2	0-6 3/4	171.5	0-11 5/8	295.3	0-0 3/4	19.05	161	73.0
036	2-11 1/8	638.2	3-0 15/16	938.2	1-2 9/16	369.9	1-4	406.4	1-11 7/16	595.3	1-5 3/16	436.6	1-5 1/2	444.5	1-8 1/8	511.2	1-1	330.2	0-6 3/4	171.5	0-11 5/8	295.3	0-0 3/4	19.05	185	83.9
048	3-1 3/16	944.6	3-8 9/16	1131.9	1-5 1/16	433.4	1-6 7/16	468.3	2- 6 1/2	774.7	1-7 5/8	498.5	2-5 5/8	752.5	2-8 9/16	817.6	1-1 7/8	352.4	0-8 1/4	209.5	0- 4	406.4	0-0 7/8	22.22	222	100.5
060	3-1 3/16	944.6	3-8 9/16	1131.9	1-5 1/16	433.4	1-6 7/16	468.3	2- 6 1/2	774.7	1-7 5/8	498.5	2-5 5/8	752.5	2-8 9/16	817.6	1-1 11/16	347.7	0-8 1/8	206.4	0- 3 7/8	403.2	0-0 7/8	22.22	249	112.9

UNIT SIZE 38HDL	MINIMUM MOUNTING PAD DIMENSIONS	
	Support Feet	
	ft-in.	mm
018,024,030 and 036	1-11 x 3-6	584.2 x 1066.8
048 and 060	2- 0 x 4-2	609.6 x 1270.0

NOTES:
1. Required clearances: With coil facing wall, allow 6" (156.4 mm) minimum clearance on coil side and coil, end, and 3 ft (914.4 mm) minimum clearance on compressor end and fan side. With fan facing wall, allow 8" (203.2 mm) minimum clearance on fan side and coil end, and 3 ft (914.4 mm) minimum clearance on compressor end and coil side. With multi-unit application, arrange units so discharge of one does not enter inlet of another.
2. Dimensions in parenthesis are in millimeters.
3. Center of gravity ⊕.

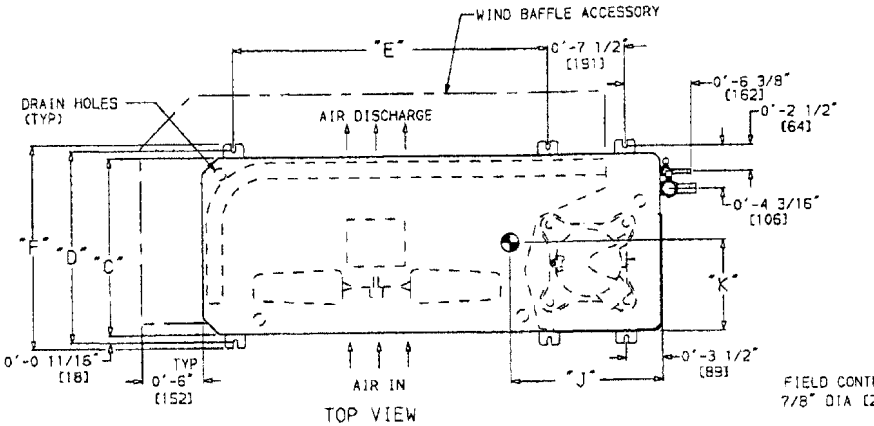

TOP VIEW

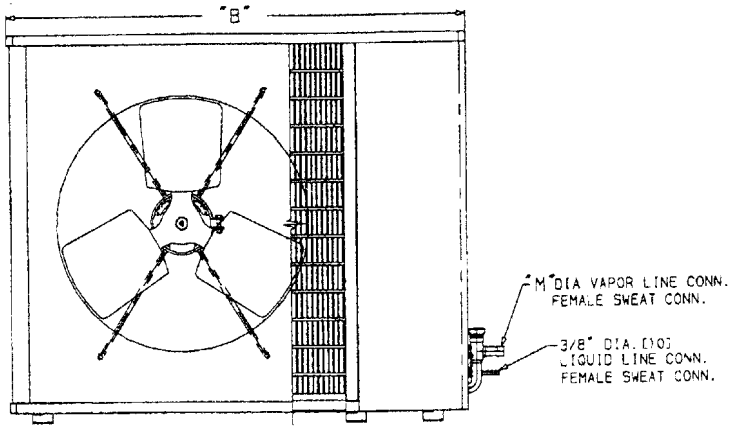

FRONT VIEW

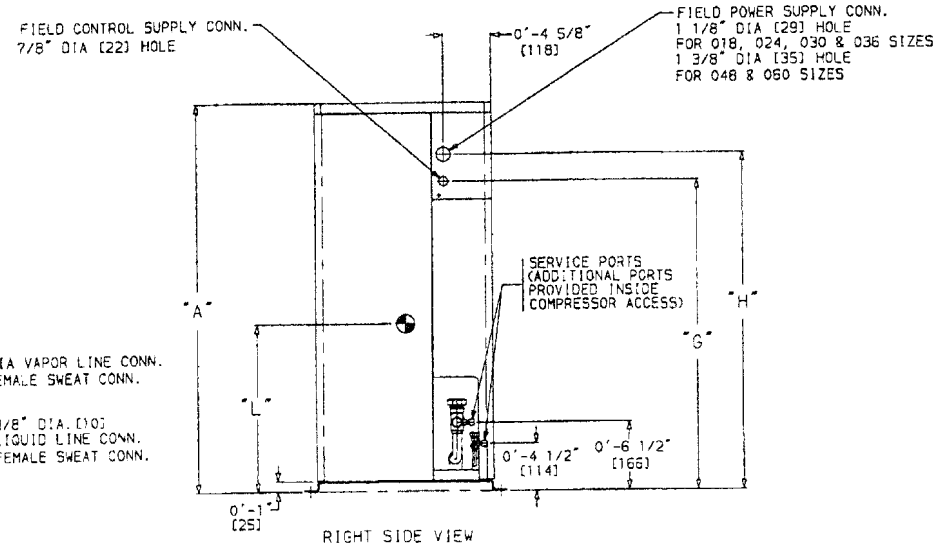

RIGHT SIDE VIEW

AccuRater

It is extremely important that all refrigerant lines and the AccuRatert metering device be insulated on heat pumps. On cooling only units, the liquid line may be left un-insulated. Use any acceptable heat resistant closed-cell foam insulation (minimum 3/8-in. wall thickness). When insulating piping, cap ends and slide insulation over the piping. Insulation can also be cut and placed over piping.

For the outdoor unit only, install flare connection on tubing to liquid line at fan coil unit. A piston is shipped in the AccuRater device body (Fig. 13) with the indoor unit. See Piston & Charge Combination Section #14 to verify that you have the required piston size for the system being installed.

IMPORTANT: The factory-supplied piston MUST be in-stalled as shown in Fig. 13.

NOTE: DO NOT install a piston on Multi Split systems. Refrigerant control is handled by a TXV (thermostatic expansion valve) in the outdoor unit in these systems.

For special applications, such as long lines or raised elevations, consult the Refrigerant Lines & Long Line Application Section #15 for specific system requirements.

IMPORTANT: The arrow on the AccuRatert device body must face away from the indoor coil.

On heat pump installations, install factory-supplied piston (enclosed in a bag taped inside the outdoor unit) into the AccuRater-metering device located in the service valve on the outdoor unit (Fig. 14).

IMPORTANT: The factory-supplied piston MUST be in-stalled as shown in Fig. 14.

Make sure Teflon seal on the piston faces toward the outdoor unit. See Piston & Charge Combination Section #14 to verify you have the required piston size for the system being installed. For special applications, such as long lines or raised elevations, consult Refrigerant Lines & Long Line Application Section #15 for specific system requirements.

Refer to Installation, Start-Up and Service Instructions for additional outdoor unit installation information.

Install a liquid line filter drier near the outdoor unit. On heat pump systems, a biflow filter drier must be used.

Cleaning and/or Replacing

The piston has a refrigerant metering hole through it. The retainer forms a stop for the piston in the refrigerant bypass mode and a sealing surface for the liquid line flare connection. To check, clean or replace the piston:

1. Shut off power to unit
2. Pump down using proper Pump Down procedures
3. Remove liquid line flare connection from AccuRater device
4. Pull retainer out of body being careful not to scratch flair sealing surface. If retainer does not pull out easily, carefully use locking pliers to remove retainer
5. Slide piston out by inserting a small soft wire, with small kinks, through the metering hole. Ensure metering hole, sealing surface around piston cones, and fluted portion of piston are not damaged
6. Clean piston refrigerant metering hole
7. Replace retainer O-Ring before reassembling AccuRater device. (O-Ring part No 99CC501052)

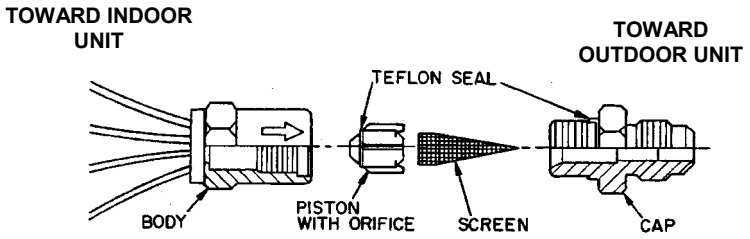

NOTE: Arrow on AccuRater® body points in *free flow* direction away from the indoor coil.

Fig. 13 – AccuRater Metering Device in Liquid Line (Bypass type Components)

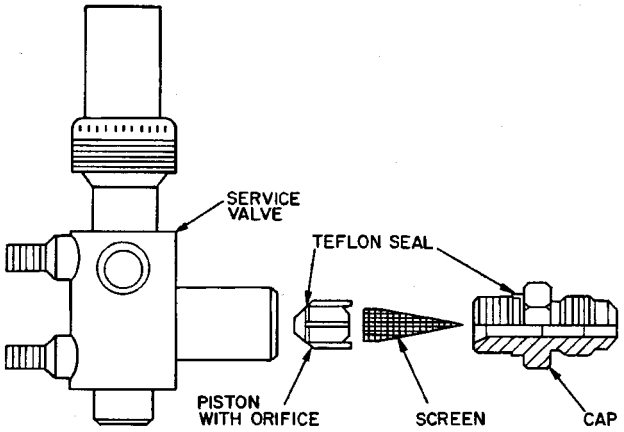

NOTE: Teflon Seal must face toward the outdoor heat pump unit.

Fig. 14 – AccuRater Metering Device at Service Valve (Bypass Type Components)

Installation

Charge Verification – Section 19

538 A & B

538 S

538 J

Console

REFRIGERANT CHARGING:

WARNING: To prevent personal injury, wear safety glasses and gloves when handling refrigerant. Do not overcharge system compressor flooding can result.

WARNING: Service valves must be fully back seated to close service port. There is no Schrader valve at the service port, and failure to backseat the valve could result in loss of system charge or personal injury.

NOTE: Do not vent or depressurize unit refrigerant to atmosphere. Remove and recover refrigerant following accepted practices.

Superheat Method —Cooling, Non-TXV (Thermostatic Expansion Valve)

To check and adjust charge during cooling season, use Tables 3 and 4 and the following procedure:

1. Operate unit a minimum of 15 minutes before checking charge.
2. Measure vapor line pressure by attaching a gage to vapor valve service port.
3. Measure vapor line temperature by attaching a service thermometer to unit vapor line near vapor line valve. Insulate thermometer for accurate readings.
4. Measure outdoor coil inlet-air dry bulb temperature with a second thermometer.
5. Measure indoor coil inlet-air wet bulb temperature with a sling psychrometer.
6. Refer to Table 3. Find air temperature entering out-door coil and wet-bulb temperature entering indoor coil.

Note the superheat temperature at this intersection.

7. Refer to Table 4. Find superheat temperature and vapor line pressure and note vapor line temperature.
8. If unit has higher vapor line temperature than charted temperature, add refrigerant until charted temperature is reached.
9. If unit has lower vapor line temperature than charted temperature, remove and recover refrigerant until charted temperature is reached.
10. If air temperature entering outdoor coil or pressure at vapor line valve changes, charge to new vapor line temperature indicated on chart.
11. This procedure is independent of indoor-air quantity.

Subcooling Method — Cooling, TXV (Thermostatic Expansion Valve)

To check and adjust charge during cooling season, use Table 5 and the following procedure:

1. Operate unit a minimum of 15 minutes before checking charge.
2. Measure liquid line temperature near liquid line service valve, and measure liquid pressure at liquid line service valve. Use a digital thermometer for all temperature measurements. DO NOT use mercury or dial-type thermometers.
3. Refer to Table 5. Find measured liquid pressure and read the liquid line temperature at the required subcooling temperature.
4. If the measured liquid line temperature does not agree with the required liquid line temperature, ADD refrigerant to lower the temperature, or REMOVE refrigerant to raise the temperature (allow a tolerance of ±3 °F)

HEATING MODE (Heat Pump Models)

To check system operation during heating cycle, use Table 6. This table indicates whether a correct relationship exists between system operating pressure and air temperatures entering indoor and outdoor units. In heating mode, check should be made approximately 15 minutes after defrost with unit running with a clean coil. If pressure and temperature do not match on chart, system refrigerant charge may not be correct or other system abnormalities may exist. Do not use table to adjust refrigerant charge. When recharging is necessary during heating season, weigh in total charge as indicated in separate indoor unit installation instructions. Remove any refrigerant remaining in the system before recharging. If the system has lost complete charge, evacuate and recharge by weight. Service port connections are provided on liquid and vapor line service valves. For evacuation and recharging, Dial-a-Charge charging cylinder, or similar device, is an accurate device for recharging systems by weight.

Table 3 — Superheat Charging Table (Superheat Entering Vapor Line Service Valve)

OUTDOOR TEMP (F)	INDOOR COIL ENTERING AIR (F) WB													
	50	52	54	56	58	60	62	64	66	68	70	72	74	76
55	9	12	14	17	20	23	26	29	32	35	37	40	†	†
60	7	10	12	15	18	21	24	27	30	33	35	38	40	†
65	*	6	10	13	16	19	21	24	27	30	33	36	38	†
70	*	*	7	10	13	16	19	21	24	27	30	33	36	39
75	*	*	*	6	9	12	15	18	21	24	28	31	34	37
80	*	*	*	*	5	8	12	15	18	21	25	28	31	35
85	*	*	*	*	*	*	8	11	15	19	22	26	30	33
90	*	*	*	*	*	*	5	9	13	16	20	24	27	31
95	*	*	*	*	*	*	*	6	10	14	18	22	25	29
100	*	*	*	*	*	*	*	*	8	12	15	20	23	27
105	*	*	*	*	*	*	*	*	5	9	13	17	22	26
110	*	*	*	*	*	*	*	*	*	6	11	15	20	25
115	*	*	*	*	*	*	*	*	*	*	8	14	18	23

LEGEND

WB — Wet Bulb

*Do not attempt to charge system under these conditions or refrigerant slugging may occur.

†Steady-state unit operation above 40 F superheat is not recommended.

Table 4 — Required Vapor Line Temperature (F) (Entering Vapor Line Service Valve)

SUPERHEAT TEMP (F)	PRESSURE AT SERVICE PORT (psig)								
	61.5	64.2	67.1	70.0	73.0	76.0	79.2	82.4	85.7
0	35	37	39	41	43	45	47	49	51
2	37	39	41	43	45	47	49	51	53
4	39	41	43	45	47	49	51	53	55
6	41	43	45	47	49	51	53	55	57
8	43	45	47	49	51	53	55	57	59
10	45	47	49	51	53	55	57	59	61
12	47	49	51	53	55	57	59	61	63
14	49	51	53	55	57	59	61	63	65
16	51	53	55	57	59	61	63	65	67
18	53	55	57	59	61	63	65	67	69
20	55	57	59	61	63	65	67	69	71
22	57	59	61	63	65	67	69	71	73
24	59	61	63	65	67	69	71	73	75
26	61	63	65	67	69	71	73	75	77
28	63	65	67	69	71	73	75	77	79
30	65	67	69	71	73	75	77	79	81
32	67	69	71	73	75	77	79	81	83
34	69	71	73	75	77	79	81	83	85
36	71	73	75	77	79	81	83	85	87
38	73	75	77	79	81	83	85	87	89
40	75	77	79	81	83	85	87	89	91

Table 5 — Required Liquid Line Temperature (F) (At Service Valve)

REQUIRED SUBCOOLING (F)	LIQUID PRESSURE AT SERVICE VALVE (PSIG)																							
	134	141	148	156	163	171	179	187	196	205	214	223	233	243	253	264	274	285	297	309	321	331	346	359
0	76	79	82	85	88	91	94	97	100	103	106	109	112	115	118	121	124	127	130	133	136	139	142	145
5	71	74	77	80	83	86	89	92	95	98	101	104	107	110	113	116	119	122	125	128	131	134	137	140
10	66	69	72	75	78	81	84	87	90	93	96	99	102	105	108	111	117	120	123	126	129	129	132	135
15	61	64	67	70	73	76	79	82	85	88	91	94	97	100	103	106	109	112	115	118	121	124	127	130
20	56	59	62	65	68	71	74	77	80	83	86	89	92	95	98	101	104	107	110	113	116	119	122	125
25	51	54	57	60	63	66	69	72	75	78	81	84	87	90	93	96	99	102	105	108	111	114	117	120

Table 6 — Outdoor Heat Pump Unit Heating Operation Pressure Table, Fixed Restrictor (High Pressure at Vapor Line Valve, Low Pressure at Liquid Valve, Suction Pressure at Compressor)

UNIT	INDOOR DRY BULB TEMP (F)	OUTDOOR TEMPERATURE (F) DRY BULB							
			60	50	40	30	20	10	0
018	60	HIGH	219.8	199.2	181.4	166.0	152.5	139.7	128.4
		LOW	83.8	71.0	59.3	48.5	38.8	30.2	22.8
		SUCTION	68.8	58.6	49.3	40.7	32.9	26.0	19.8
	70	HIGH	247.7	225.6	206.4	189.5	173.5	159.4	146.5
		LOW	85.1	72.1	60.0	49.1	39.3	30.1	23.4
		SUCTION	70.4	60.0	50.5	41.8	33.9	26.9	20.6
	80	HIGH	278.3	254.3	233.5	214.0	196.2	180.3	165.5
		LOW	86.5	73.0	60.7	49.7	40.0	31.5	24.0
		SUCTION	72.0	61.4	51.7	42.8	34.8	27.7	21.4
024	60	HIGH	234.1	210.3	190.4	173.6	159.4	147.3	136.2
		LOW	77.9	66.2	55.4	45.5	36.5	28.5	21.2
		SUCTION	66.3	56.4	47.3	38.9	31.3	24.4	18.2
	70	HIGH	262.0	237.0	215.8	197.8	182.5	168.9	156.3
		LOW	79.4	67.4	56.4	46.3	37.0	28.8	21.6
		SUCTION	68.0	57.9	48.6	40.0	32.2	25.2	18.9
	80	HIGH	292.6	265.9	243.3	224.2	207.4	191.3	178.0
		LOW	80.9	68.6	57.3	47.0	37.6	29.4	22.2
		SUCTION	69.8	59.4	49.8	41.0	33.1	25.9	19.6
030	60	HIGH	222.3	202.2	185.1	170.4	157.9	146.7	135.9
		LOW	83.8	71.4	60.0	49.3	39.7	30.9	23.3
		SUCTION	61.8	52.6	44.1	36.2	29.0	22.5	16.7
	70	HIGH	250.9	229.6	211.2	195.4	181.6	167.8	156.6
		LOW	85.2	72.5	60.7	49.9	40.1	31.3	23.7
		SUCTION	63.5	54.0	45.3	37.2	29.9	23.2	17.3
	80	HIGH	282.2	259.3	239.5	222.6	205.6	191.3	178.5
		LOW	86.6	73.5	61.5	50.4	40.6	31.9	24.3
		SUCTION	65.1	55.4	46.4	38.2	30.7	24.0	18.0

UNIT	INDOOR DRY BULB TEMP (F)	OUTDOOR TEMPERATURE (F) DRY BULB							
			60	50	40	30	20	10	0
036	60	HIGH	226.0	205.4	188.0	172.9	160.0	148.4	137.4
		LOW	76.1	64.7	54.3	44.7	36.1	28.2	21.2
		SUCTION	61.9	52.6	44.1	36.3	29.3	22.8	17.0
	70	HIGH	254.7	233.0	214.4	198.2	183.9	169.7	158.3
		LOW	77.3	65.8	55.3	45.5	36.6	28.8	21.8
		SUCTION	63.3	54.0	45.3	37.4	30.1	23.5	17.7
	80	HIGH	286.7	263.5	243.3	225.5	207.7	193.5	180.4
		LOW	78.9	67.1	56.2	46.2	37.3	29.5	22.5
		SUCTION	65.0	55.4	46.6	38.4	31.0	24.4	18.4
048	60	HIGH	231.6	210.2	191.8	175.4	162.1	148.7	137.6
		LOW	80.4	68.2	56.9	46.5	37.2	29.0	21.7
		SUCTION	67.8	57.6	48.1	39.4	31.5	24.5	18.2
	70	HIGH	261.2	238.3	218.5	201.2	184.3	170.2	157.8
		LOW	81.8	69.3	57.7	47.1	37.7	29.6	22.2
		SUCTION	69.4	58.8	49.1	40.3	32.3	25.2	18.8
	80	HIGH	293.2	268.6	247.2	226.7	208.6	193.1	178.9
		LOW	83.2	70.3	58.5	47.8	37.8	30.2	22.8
		SUCTION	70.9	60.1	50.2	41.2	33.1	25.9	19.4
060	60	HIGH	228.9	207.5	189.6	173.8	160.4	147.6	136.6
		LOW	85.9	72.7	60.9	50.0	40.1	31.3	23.5
		SUCTION	63.6	53.9	44.9	36.8	29.4	22.7	16.8
	70	HIGH	258.3	235.7	215.9	199.0	183.4	168.8	156.4
		LOW	86.9	73.8	61.6	50.5	40.5	31.7	24.0
		SUCTION	65.1	55.2	46.0	37.7	30.2	23.5	17.5
	80	HIGH	290.0	265.7	244.4	225.5	206.7	191.3	177.2
		LOW	88.4	74.7	62.3	50.9	41.1	32.3	24.5
		SUCTION	66.5	56.5	47.2	38.7	31.1	24.3	18.2

REFRIGERANT CHARGING (Multi Split)

WARNING: To prevent personal injury, wear safety glasses and gloves when handling refrigerant. Do not overcharge system this can cause compressor flooding.

WARNING: Service valves must be fully back seated to close service port. There is no Schrader valve at the service port, and failure to backseat the valve could result in loss of system charge or personal injury.

NOTE: Do not vent or depressurize unit refrigerant to atmosphere. Remove and recover refrigerant following accepted practices.

The Multi Split units are factory charged with a full operating charge. Check the system for proper charge level using the subcooling method. If a refrigerant system must be opened for major service work, first recover refrigerant in system using accepted practices. Evacuate and dehydrate the system when ready to recharge; then weigh in the proper refrigerant quantity as marked on the unit data plate for each circuit.

Subcooling Charging Method

1. Operate the unit a minimum of 15 minutes before checking the charge.
2. Measure discharge pressure by attaching an accurate gage to the discharge service port. **DO NOT** use the external service valves for this pressure reading.
3. Measure the vapor supply line temperature by attaching an accurate thermistor type or electronic thermometer to the vapor supply line near the outdoor coil. See Fig #14
4. Refer to Table #7 to find the required subcooling temperature for the unit. Find the point at which the required subcooling temperature intersects the measured internal discharge service port pressure in Table #8.
5. To obtain the required subcooling temperature at a specific discharge pressure, add refrigerant if vapor supply line temperature is higher than indicated, or remove refrigerant if temperature is lower than indicated. Allow a tolerance of ± 3%.

Table 8 – Required Liquid Line Temperatures

PRESSURE (Psig) AT SERVICE FITTING	REQUIRED SUBCOOLING TEMPERATURE (F)					
	0	5	10	15	20	25
134	76	71	66	61	56	51
141	79	74	69	64	59	54
148	82	77	72	67	62	57
156	85	80	75	70	65	60
163	88	83	78	73	68	63
171	91	86	81	76	71	66
179	94	89	84	79	74	69
187	97	92	87	82	77	72
196	100	95	90	85	80	75
205	103	98	93	88	83	78
214	106	101	96	91	86	81
223	109	104	99	94	89	84
233	112	107	102	97	92	87
243	115	110	105	100	95	90
253	118	113	108	103	98	93
264	121	116	111	106	101	96
274	124	119	114	109	104	99
285	127	122	117	112	107	102
297	130	125	120	115	110	105
309	133	128	123	118	113	108
321	136	131	126	121	116	111
331	139	134	129	124	119	114
346	142	137	132	127	122	117
359	145	140	135	130	125	120

Table 7 – Required Unit Subcooling

UNIT	SUBCOOLING AT TXV INLET (F) WITH ALL FANS OPERATING
024	19
048	16

TXV — Thermostatic Expansion Valve

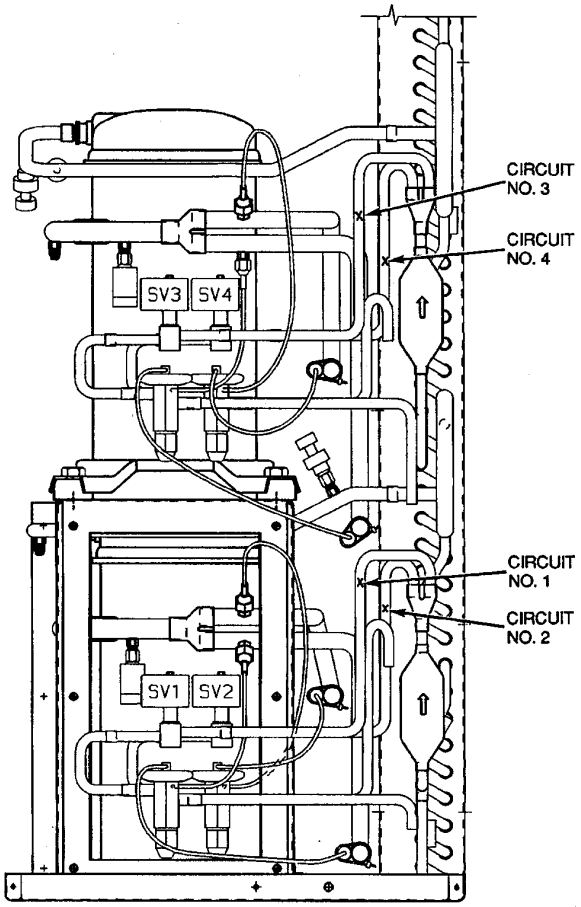

LEGEND

SV — Service Valve
X — Measurement Location

Figure 14 – Vapor Supply Line Measurement Locations (048 Unit Shown)

Installation

Controls – Section 20

- High Wall
- Under Ceiling or Cassette
- 538S
- Console

Controls — systems using high wall fan coils

619E control system

The 619E unit is equipped with a microprocessor control, which operates the system. This control is located in the control box of the fan coil unit, with thermistors located in the fan coil inlet and on the indoor coil. The 619E heat pump fan coil units also have thermistors located on the outdoor coil and in the outdoor air inlet. These thermistors monitor system operation and control the operating mode. To change settings or modes of operation, use the factory-supplied infrared wireless remote controller (see Fig #1). This controller allows the fan coil unit to be operated from within the same room without any wire connections to the unit. The remote controller includes a wall-mounted bracket. To install the bracket, attach bracket to the wall using factory-supplied, double-sided tape. Install factory-supplied batteries into the remote controller and place the controller into the bracket so that it is ready for use.

Operating mode memory

After the system is turned off or after a power failure, the system remains in the last operating mode selected. When the system is turned back on, or when power is automatically restored, operation continues in the same operating mode as when power shut down.

Automatic operation (Auto) mode

If auto mode is selected, the system automatically switches the operating mode from heating to cooling, or from cooling to heating depending on the preset temperature (adjustable ± 35° F). On cooling only units the Auto mode automatically switches the operating mode to cooling.
NOTE: Between the cooling cycle and the heating cycle there is a neutral zone of approximately 2° F above and 2° F below the preset temperature when only the fan is operating.

Operating fault diagnosis

The system includes an automatic diagnosis feature, which is activated under difficult or unacceptable operating conditions. If such conditions occur, the system stops automatically, the operating fault signal appears (green ‘‘UNIT ON’’ light on the front of the fan coil unit flashes), and an analysis of the system operating conditions is initiated. The system is restarted automatically as soon as normal conditions have been restored, or after 5 tries it will remain off. If the system does not start again, the green ‘‘UNIT ON’’ light flashes an error code.

Control operating modes

There are 11 operating modes on Heat Pumps and 9 on Cooling Only Units (including the off mode)
Each mode operates as follows:

• **Off Mode** — When the unit is in the off mode, all functions (compressor, outdoor fan, indoor fan, and air sweep) are off, except the reversing valve, which will stay energized if the unit was last operated in the cooling mode.

• **Air Circulation Mode (Fan Operation Only)** — When air circulation mode is selected, the indoor fan operates continuously at the selected speed (high, medium, low, or auto). If the auto mode is selected, the indoor fan operates at low speed. The compressor and outdoor fan are off. The reversing valve will remain in the last operating mode.

• **Cooling Mode** — When the cooling mode is selected, the indoor fan operates continuously at the selected speed if the speed is high, medium, or low. If the indoor fan is in auto mode, the fan changes operating speeds depending on the difference between the room temperature and the set point. The reversing valve will be on for 18k & 24k units or off for 9K & 012k units. The compressor cannot run for 3 minutes from the time the system starts up or for 3 minutes from the time the compressor last operated. When the temperature of the room is equal to or greater than the selected temperature, the compressor and outdoor fan will operate until the room temperature is 2° F below the set point, and then shut off. When the room temperature is less than the selected temperature, the compressor and outdoor fan remain off.

(MORE)

• **Maximum Dehumidification Mode** — When the dehumidification mode is selected, the indoor fan will operate continuously at the selected speed if the speed is high, medium, or low. If the indoor fan is in auto mode, the fan changes operating speeds depending on the room temperature. If the room temperature is below the set point, the indoor fan runs at ultra-low speed, and the compressor could run for up to 4 minutes. (Ultra-low speed is a control-driven speed [not user configurable] used to sample the space when the fan would normally be off.) The reversing valve will be on for 18k & 24K units or off for 9k & 12k units. The compressor cannot run for 3 minutes from the time the system starts up or for 3 minutes from the time the compressor last operated.

Initial Operation — When the mode is first selected, one of the following occurs:
1. If the room temperature is above or equal to the selected temperature, the unit operates for 16 minutes and the compressor and outdoor fan operate. The indoor fan will operate as in the cooling mode. After 16 minutes of operation (or when the room reaches 2° F below set point), the unit switches to normal dehumidification operation.

2. If the room temperature is below the selected temperature, the unit operates for 8 minutes as follows: The compressor and outdoor fan operate for 3 minutes. The indoor fan operates in low speed, and 30 seconds after the compressor stops, the indoor fan stops. The unit remains off for 1 minute, and then the indoor fan starts in ultra-low speed for 30 seconds. The unit then switches to normal dehumidification operation.

Normal Operation — One of the following will take place:
1. When the temperature of the room is equal to or greater than the selected temperature (by not more than 3° F), the unit operates for 8 minutes as follows: The compressor and outdoor fan operate for 3 minutes. The in-door fan operates in low speed, and 30 seconds after the compressor stops, the indoor fan stops. The unit remains off for 1 minute, and then the indoor fan runs at ultra-low speed for 30 seconds. The normal dehumidification operation is repeated for the newly sensed room temperature.
2. If the room temperature is equal to or greater than the selected temperature, but not by more than between 4° F and 6° F, the compressor and outdoor fan operate for 4 minutes. The indoor fan runs at ultra-low speed and will stop 30 seconds after the compressor stops. After 3 minutes, the indoor fan runs at ultra-low speed for 30 seconds. The normal dehumidification operation is repeated for the newly sensed room temperature.
3. When the room temperature is equal to or more than 4° F below the selected temperature, the system operates as follows: The compressor and outdoor fan operate for 3 minutes. The indoor fan operates at ultra-low speed and will stop 30 seconds after the compressor stops. After 4 or 5 minutes, the indoor fan starts at ultra-low speed for 30 seconds. The normal dehumidification operation is repeated for the newly sensed room temperature. If the room temperature is still 4° F below the selected temperature, the compressor, outdoor fan, and indoor fan remain off. After 7 ½ minutes, the indoor fan operates at ultra-low speed for 30 seconds. The normal dehumidification operation is repeated for the newly sensed room temperature.

• **Heat Pump Heating Mode** —When the heat pump mode is selected, the indoor fan operates at the selected speed if the speed is high, medium, or low, unless overridden by the coil temperature (to prevent cold drafts). If the in-door fan is in auto mode, the fan changes operating speeds depending on the difference between the room temperature, the set point, and the coil temperature. The reversing valve will be off for 18k & 24k units or on for 9k & 12k units. The compressor cannot run for 3 minutes from the time the system starts up or for 3 minutes from the time it last operated. When the temperature of the room is 8° F below the selected temperature, the unit will operate in heat pump mode until the temperature is 6° F above the selected temperature or the compressor runs for 40 minutes (whichever comes first). If the temperature of the room is less than 7° F below or equal to the selected temperature, the unit operates in heat pump mode until the selected set point temperature plus 2° F is reached.

• **Demand Defrost Mode** (Heat Pump Systems Only) —This unit uses a demand defrost system to remove frost from the outdoor coil during heating operation. The indoor and outdoor fans are shut off during defrost mode. See Electronic Control Defrost Regions Map Fig #2 for defrost region details.

• **Sleep Mode** — The sleep mode timer turns the unit off when the timer reaches zero minutes. The duration's that can be selected are 1,2,3, or 7 hours. After the initial 30 minutes, the user set point shifts approximately 1° F warmer. This sequence repeats itself every 40 minutes up to a total of 150 minutes.
When is sleep mode, the display on the remote controller is dimmed.

(MORE)

• **Awake Mode** — The awake timer will turn the unit on when the timer reaches zero minutes. The unit will start in the same mode and at the same selected temperature as when the system shut off. If the room temperature is not within approximately 5° F of the set point 40 minutes before start-up, the unit runs before the awake timer reaches zero to achieve the set point temperature at start-up.

• **Automatic Operation Mode for Cooling Only Systems** — The unit samples the air in the room. Based on the room temperature, the unit selects one of the following modes:

Cooling Mode — If the room temperature is more than 82.4 F with a preset temperature of 78.8 F.

Dry Mode — If the room temperature is more than 75.2 F and less than 82.4 F with a preset temperature of 77 F.

Fan Only Mode — If the room temperature is less than 75.2 F. the preset temperature can be changed by ±4° F using the remote control.

• **Automatic Operation Mode for Heat Pump Systems** — The operation mode will be determined after 20 seconds of room monitoring (to determine the room temperature and the outdoor air temperature).

• **Test Mode** — The test mode can be selected by setting the slide switch on the fan coil unit to TEST position. The slide switch is located on the front of the unit. The fan coil unit will start immediately (there is no compressor time delay when using test mode) in cooling mode with an infinitely low set point. The indoor fan speed will be at the high setting, and the swing louvers will be on (moving up and down).
NOTE: The unit cannot be controlled by the remote controller until the slide switch is returned to the REMOTE position.

• **Emergency Mode** — This mode is only to be used if the remote controller is lost, damaged, or the batteries are discharged. To initiate emergency mode, manually move the slide switch on the fan coil unit to the EMER position. The unit is automatically operated in cooling or heating mode according to room temperature. Emergency operation settings are as follows:
1. Operation mode: AUTO
2. Fan Speed: AUTO
3. Cooling set point: 77 F
4. Timer Mode: Continuous NOTE: The unit cannot be controlled by the remote controller until the slide switch is returned to the REMOTE position.

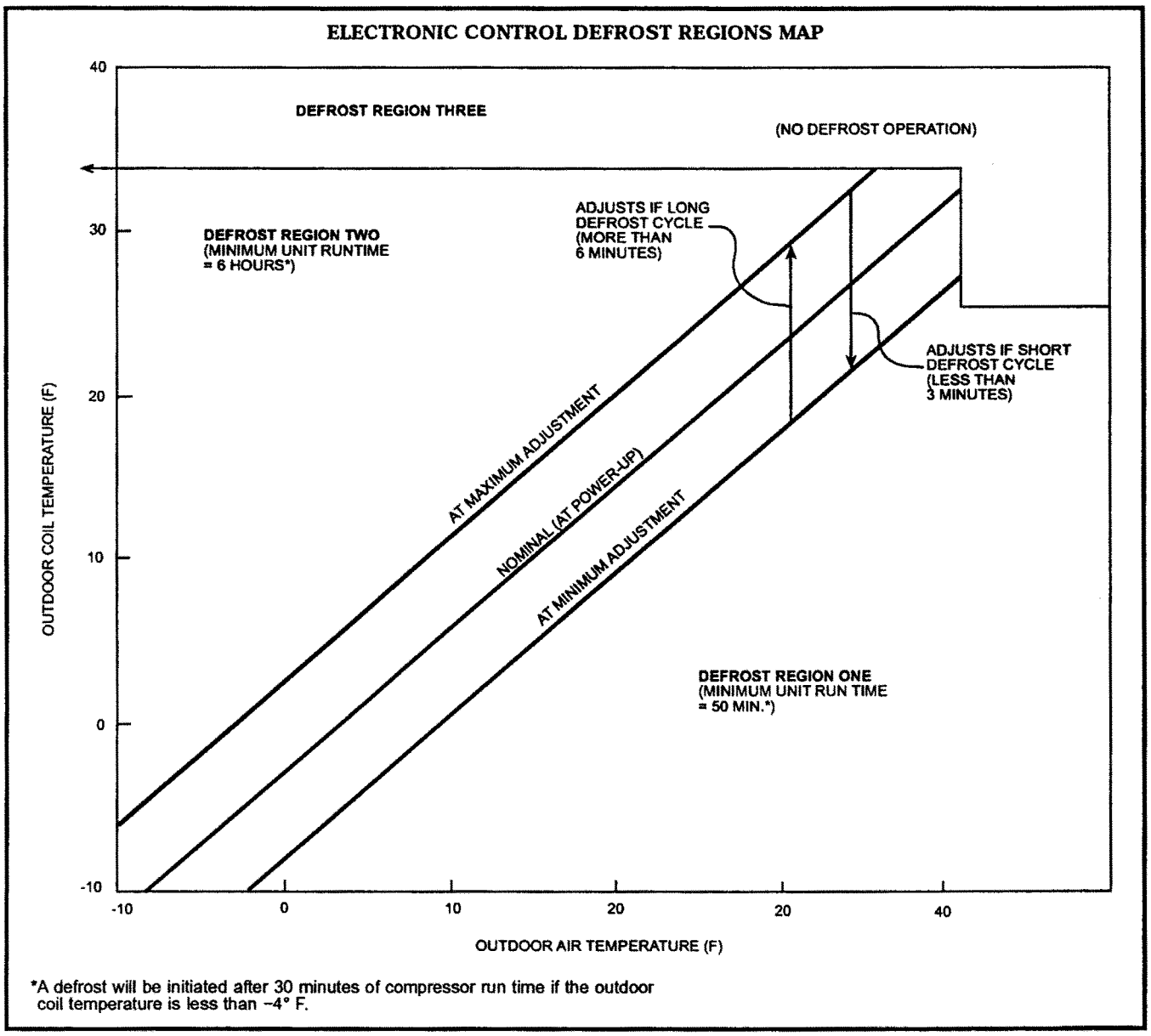

*A defrost will be initiated after 30 minutes of compressor run time if the outdoor coil temperature is less than −4° F.

Figure 2

Controls — systems using Under Ceiling or Cassette fan coils

Automatic air sweep

All Under Ceiling units are equipped with an automatic air sweep feature, which automatically directs the airflow louvers up and down to provide optimum room air circulation. If the auto sweep feature is not desired, temporarily start the auto sweep using the remote thermostat (press Air Sweep button). When the louvers are in the desired position, turn auto sweep off (press Air Sweep button again) to hold them in that position.

Operating mode memory

After the system is turned off or after a power failure, the system remains in the last operating mode selected. When the system is turned back on, or when power is automatically restored, operation continues in the same operating mode as when the system shut down.

Automatic operation (auto) mode

If auto mode is selected, the system automatically switches over the operating mode from heating to cooling, or from cooling to heating depending on the selected temperature. Auto mode also controls fan speed if not manually overridden.
NOTE: Between the cooling cycle and the heating cycle there is a neutral zone of approximately 2° F above and 2° F below the selected temperature when only the fan is operating.

Operating sequence

Ceiling-suspended fan coil units have a relay board which controls system operation in response to the room thermostat. The user may manually select any one of 3 fan speeds for unit operation. Ceiling-suspended systems may be equipped with an accessory power ventilation kit and/or condensate pump.

Fan operation — Fan speed can be selected by pressing the fan button (high, medium, or low speed choices). The fan(s) is capable of operation when unit mode is set on cooling, heating, or auto mode. When the fan(s) is operating in medium or high speed and the unit is equipped with the power ventilation kit, the ventilation fan will operate to provide fresh air. If the mode is set to the AUTO position, then the fan will operate with the outdoor unit compressor.

Cooling mode operation — When the room thermostat senses a demand for cooling, the fan coil relay board is energized. The indoor fan(s) will start in the selected speed (if it is not already operating). The reversing valve will energize and switch to the cooling position. The internal condensate pump (if so equipped) runs whenever the reversing valve is energized and/or the unit is in cooling. As long as the condensate float switch and freeze protection thermostat are closed, the cooling relays in the fan coil unit will close. This energizes the compressor and outdoor fan in the outdoor unit. The compressor will continue to operate until the room thermostat is satisfied. When the cooling demand is satisfied, the compressor and outdoor fan will stop. If the system is in the AUTO mode, the indoor fan will stop with the compressor. If the unit has the accessory ventilation kit, the ventilation fan will operate whenever the indoor fan is set for medium or high speed.

Heat pump operation — When the room thermostat senses a demand for heating, the fan coil relay board is energized. The indoor fan will start in the selected speed (if not already operating), and the reversing valve will not be energized. The internal condensate pump (if supplied) and freeze protection thermostat are not operated during heating operation. The control relay (CR2) closes, and the compressor and outdoor fan are energized through the defrost board (DFB), which is located in the outdoor unit. The microprocessor logic in the DFB is energized when the compressor starts, and the defrost timer runs. Once every 90 minutes (factory default setting) of compressor run time, the DFB logic checks the defrost thermostat (DFT). If the DFT is open, the unit continues in heating operation. If the DFT is closed, the DFB switches the unit to defrost mode. The timing on the DFB may be set at either 30, 50, or 90 minutes.

Defrost — The DFB energizes the RVS (reversing valve solenoid), and the reversing valve switches to the cooling position. The K1 relay on the DFB opens and the outdoor fan stops. The W2 contact on the DFB is also energized, which in turn energizes the defrost relay on the fan coil relay board, turns off the electric heater and stops the indoor fan. The DFB logic checks the 10-minute defrost timer and the DFT. If the DFT opens in less than 10 minutes, the

(MORE)

DFB switches the unit back to normal heating operation. If the DFT remains closed the DFB switches the unit back to heating operation after 10 minutes. When the DFB changes back to heating mode, the RVR (reversing valve relay) is de-energized and the reversing valve switches back to heating operation. Both the outdoor and indoor fans come back on, and if necessary, the electric heater also turns on.

System safeties — The system is equipped with the following safety devices to protect system components:
A. Indoor coil freeze protection thermostat (cooling cycle only) — If a coil temperature of 28 F or lower is sensed, the compressor and outdoor fan will be shut down until the coil temperature exceeds 28 F. The indoor fan will continue to run.

B. Condensate float switch (units equipped with accessory condensate pump, cooling cycle only) — If the level of condensate in the drain pan rises too high; the condensate float switch will turn off the compressor and outdoor fan until the condensate level returns too normal. The indoor fan will continue to run.

C. Outdoor Unit Safeties — These units are protected by the following devices:
• High-pressure switch (standard on 538A & 538B)
• Loss of charge switch (heat pump only)
• Compressor internal overloads
• Outdoor fan motor internal overload
NOTE: a high discharge gas temperature sensor also protects outdoor units with scroll compressors and a 2-minute timer to prevent possible reverse rotation of the compressor. Should any of these devices trip after the compressor is energized, the Cycle LOC™ protection device will lock out the outdoor unit (turn if off) to prevent cycling on a safety device.

Special operation, heating —Outdoor cooling units can be matched with heat pump ceiling-suspended or cassette fan coil units to provide supplemental electric heat. All other operation is the same as a cooling only system, except these units have heating capability as follows: When the room thermostat initiates a call for heating, the electric heater is turned on. The indoor unit fan will start at the same time if it was not already running. When the heating requirement is satisfied, the room thermostat will open, and the heater will turn off.
Use cooling only thermostat HH--07ZE-009 for these applications. (fig #3)

Heat pump thermostats — These thermostats are for heat pump applications when both cooling and heating set points are required. They can also be used for systems with a cooling only outdoor unit and heat pump indoor unit. When set in AUTO mode the space conditions are maintained by calling for either cooling or heating and maintaining at least a 2 degree differential between them. Indoor fan will operate in all instances either in auto mode or in a pre-selected manual mode. Automatic mode operation is as follows:

Auto cooling mode:	Y contact closed
	O contact closed
	H1 contact open
Auto heating mode:	Y contact closed
	O contact open
	H1 contact closed

For heat pump systems, Y contact provides mechanical heating (H1 contact remains closed). If control logic calls for auxiliary heat, it is activated through contact H2 and the center (orange) LED is lit. When the system is in emergency heat mode, only H2 and the fan are activated. Other thermostat operating features include the following:
• Center (orange) LED is for AUX heat.
• Right-hand (red) LED indicates a fault —compressor lockout when wired.
• Filter indicator on display screen becomes activated at 250 hrs of run time. To reset, hold fan button in for 5 seconds.
• Terminal block RS1, RS2, RS+V can be used for a remote indoor sensor so that the thermostat can be located elsewhere (secure room).

Controls – 538S

Unit operation

NOTE: AUTO fan mode is used as the unit operation example for ALL fan coil units in this section. Contact your local Carrier dealer for operation information in other fan modes.

Fan coil units — Each fan coil unit has a self-contained control system that determines the set point for fan coil operation, fan mode operation, and heating mode operation (if provided). The fan coil units are equipped with either a wired or wireless remote controller set. Set points and fan modes may be determined separately for each fan coil unit. Each fan coil unit may call for cooling operation independently. On a call for cooling operation by a single fan coil unit, a 24-v signal is sent to the 538S outdoor unit and energizes a control relay. The indoor blower starts according to the normal fan coil unit sequence of operation. The control relay (in the outdoor unit) initiates operation of a cooling cycle for the respective indoor unit refrigerant circuit; including opening a liquid line solenoid valve in the outdoor unit. As the set point at each fan coil is satisfied, its individual 24-v signal to the 538S unit stops, and the respective solenoid valve for each fan coil unit closes. The indoor fan cycles off. The 619E fan coil units then begin room sampling operation after a 3-minute off period (during sampling, the fan motor runs at low speed for 1 minute to sample the demand in the space; then cycles off until the next sampling period if no demand is found).

538S outdoor condensing unit — The outdoor unit is equipped with a control that monitors the indoor fan coil cooling request. The control turns on solenoid valves for the appropriate indoor fan coil unit system. The control also combines the cooling requests to control up to 2 compressors. The 538S control provides a 2-minute compressor time-delay circuit, which disables the compressor for 2 minutes at unit start-up. The time delay device timers are initialized when the unit is powered up (for the first 2 minutes). The 538S-unit control includes an integral head pressure control function. This function maintains a minimum head pressure by cycling the outdoor-fan motor in response to inputs from the thermistor (for outdoor ambient temperature) and the transducers (for system discharge pressures in each compressor circuit). The head pressure for the compressor(s) is monitored to control the outdoor fan output. The control reads an outdoor temperature thermistor to determine if the head pressure should be used to control the fan output.

Operation — The 538S unit receives a 24-v control signal from each fan coil unit as each fan coil unit initiates a demand for cooling. The 24-v signal energizes a control relay in the 538S unit (one relay per fan coil unit). The refrigerant flow to each fan coil unit is controlled through a solenoid valve (one valve per fan coil unit). The solenoid valve(s) will not open until the controller initiates compressor operation. The microprocessor control in the 538S unit includes a 2-minute, anti-short cycle, time-delay function. This function provides a minimum off delay between compressor run stages (2 minutes each from the end of the last on period to the beginning of the next on period). If more than 2 minutes have passed since the end of the last on period, the compressor is ready to restart with initiation of demand from any fan coil unit on its circuit.

Increased Demand for Cooling

NOTE: There are 2 separate compressor circuits in the 538S-048 units (circuit A and circuit B). Each circuit operates independently, and will operate as follows (as will the single-circuit 024 units) upon receiving the first 24-v cooling demand signal from a fan coil unit:

1. After the 2-minute time-delay function is satisfied, the appropriate compressor starts.
2. The solenoid valve connected to the fan coil sending the demand signal is energized (at the 538S units).
3. The outdoor fan starts, and its operation is controlled by the microprocessor as described in 538S Microprocessor Control of Outdoor Fan section below. When a second fan coil unit signals a demand for cooling, its associated solenoid valve is energized immediately, allowing refrigerant to flow to both fan coil units simultaneously.

Decreased Demand for Cooling — When a fan coil unit's demand for cooling ends, the 24-v signal to the 538S unit stops, and the appropriate solenoid valve closes. If the other fan coil unit on this circuit still has a demand, the appropriate compressor continues to run as long as necessary for the second fan coil unit. When the second fan coil unit's demand for cooling ends, its solenoid valve closes, and the appropriate compressor stops. The compressor will not start for at least 2 minutes after the end of this cycle due to the time-delay function. On size 024 units, when the compressor stops, the outdoor fan also stops. On size 048 units, outdoor fan operation may continue under control of

(MORE)

the 538S microprocessor if the other refrigerant circuit is still operating. The outdoor fan only stops when both compressors are off. Refer to 538S Microprocessor Control of Outdoor Fan section below for more details.

538S-microprocessor control of outdoor fan — The microprocessor control has a built-in head pressure control system that cycles the outdoor-fan motor to maintain a selected discharge pressure. The microprocessor senses outdoor ambient temperature using a thermistor and refrigerant pressure using a pressure transducer mounted on the compressor circuit discharge line. The 538S-024 units have one transducer, and the 048 units have two. The factory set points for the head pressure control operation are 55 F for outdoor ambient temperature and 250 psig for discharge pressure. When the outdoor ambient temperature is above the out-door ambient set point and both fan coils on a compressor circuit are calling for cooling operation, the outdoor fan runs at full speed whenever compressor operation is permitted.
When only one fan coil is calling for cooling, fan cycling is permitted at all ambients. Fan motor is then cycled on and off to maintain set point discharge pressure. When the outdoor ambient temperature is below the specified set point, the fan motor is cycled on and off to maintain a compressor discharge pressure at the specified pressure set point. On 538S-048 units with 2 compressors running, the compressor with the lower head pressure controls the fan operation. If only one compressor is running, that compressor controls the fan operation. If the discharge pressure on either circuit exceeds 370 psig, the outdoor-fan motor runs continuously, and the fan cycling function is bypassed until the discharge pressure decreases to 365 psig. Units can be field configured to select head pressure control at 35 F outdoor ambient and/or 200 psig discharge pressure.

Status indicator lights — The 538S control board is equipped with LED indicators to aid in evaluating the status of the control system, including:
• Time delay function status
• Fan coil unit demand status
• Head pressure control status
• Current unit malfunctions
Also see System Status Red and Green LED's and Fault Codes in Section #27.

Unit malfunction — Each compressor circuit is equipped with a high-pressure switch (HPS), a low-pressure switch (LPS), and a discharge temperature switch (DTS). These safety devices are located in a Cycle-LOC™ device circuit that prevents compressor operation if any of these safety devices is activated. The lockout can be reset by turning the main power to the 538S unit off, then on again.

Compressor overcurrent protection is achieved by an internal line break overload, which automatically resets when the motor temperature cools to a satisfactory level. Manual reset of Cycle-LOC circuit may also be required.

Pressure transducers and the outdoor ambient thermistor are monitored by the 538S controller. If a pressure transducer is found to be out of range, the LED's flash a code for this fault, but the control continues to cycle the outdoor fan according to input from the other transducer. If only one transducer is active and is determined to be out of range, the head pressure control is bypassed and the fan runs continuously. If the thermistor is found to be out of range, the control allows fan cycling per transducer input, and the LED's flash a code for this failure. See Trouble shooting Section #27 for System Status Red and Green LED's and Fault Codes table.

Installation

Thermostat

Operation

Photographs and Illustrations

AIR CONDITIONER OPERATION MODE

Your Carrier Duct Free air conditioner operates in four modes:

Cooling

The air conditioner cools, dries, and filters the room air

Fan Only

The air conditioner filters and circulates the room air, without changing the room air temperature

Heating

The air conditioner heats and filters the room air (if so equipped).

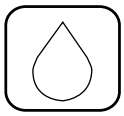

Dehumidification

The air conditioner dries and filters the room air, while slightly cooling the room air temperature. (NOTE: Dehumidification does not take the place of a dehumidifier).

In addition, the air conditioner can operate automatically:

Auto

The air conditioner heats or cools the room according to the temperature you select:

If the room air is cooler than the desired temperature, the air conditioner operates in HEATING mode—(if so equipped).

If the room air is warmer than the desired temperature, the air conditioner operates in COOLING mode.

The remote controller transmits operation commands to the air conditioner. You can use the remote controller to perform the following functions:

- Turns the air conditioner ON and OFF.
- Selects the operation mode (Cooling, Fan, Heating, Dehumidification, or Auto).
- Adjusts the room air temperature and the fan speed.
- Sets air conditioner operation timer periods.
- Sets additional air conditioner adjustments and operating features.

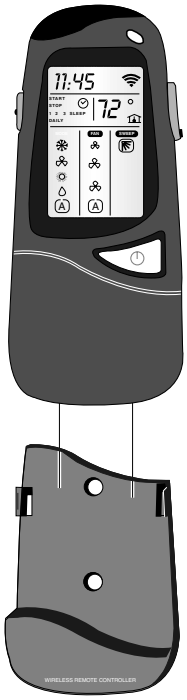

The remote controller mounting rack can be used to secure the remote controller to a surface. When the remote controller is in its mounting rack, make sure that there is a clear line of sight between the remote controller and the air conditioner.

THE REMOTE CONTROLLER

The remote controller contains various buttons to operate the air conditioner, and a window display in which the current operation status is shown.

Each time you press a button on the remote controller you can observe the result on the display (Don't worry about making a mistake, anything you do can easily be changed.)

REMOTE CONTROLLER OPERATION

NOTE: To operate the air conditioner with the remote controller; set the operation switch to REMOTE (See Page 9).

- The remote controller may be used at a distance of up to 23 ft from the air conditioner display panel (without obstructions).

(MORE)

I.R. Transmitter Window

Clock

Temperature Sensor

Timer Start/Stop
One-time/Daily

Transmission Indicator

Low Battery Indicator

Menu Select Button

Up/Down Button

Operation Mode - Cooling, Fan, Heating, Dry, Auto

Desired Temperature

Sensor Active Indicator

Fan - Low, Medium, High, Auto

Sweep Indicator

On/Off Button

* **Timer Set Buttons**

Clock Set Button *

Room Temperature Button *

On/Off Quick Delay Button *

Local Sensing Button *

*Buttons located behind slide down panel.

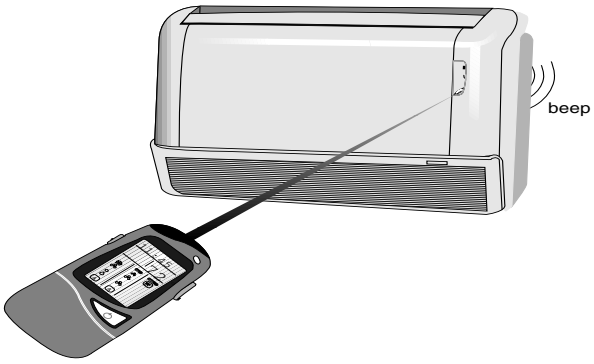

- When transmitting a command from the remote controller, point the transmitter toward the receiver on the right side of the air conditioner.
- The air conditioner confirms the receipt of a command by sounding two beeps.
- Make sure that no objects block the clear line of sight between the remote controller and the air conditioner.
- Changes entered on the remote controller must be promptly transmitted to the air conditioner. **If no transmission is made within 10 seconds, the remote controller reverts to its previous state.**

The remote controller and the air conditioner constantly "exchange" information regarding adjustments and the room air temperature. **To ensure proper system operation, avoid blocking of the direct line of sight between them.**

(MORE)

INSERTING BATTERIES IN THE REMOTE CONTROLLER

Before using the remote controller you must insert two 1.5V AAA Alkaline batteries, as follows:

• Slide off and remove the battery compartment cover.

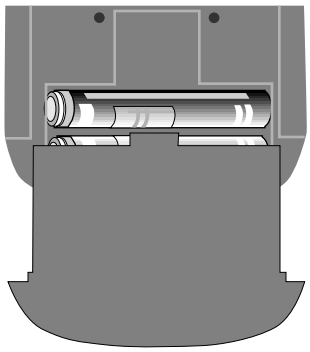

• Insert the batteries, making sure to follow the polarity (+,-) markings.

• Replace the battery compartment cover

• Replace both batteries whenever the "Low Battery" indicator appears.

⚠ CAUTION

Do not drop the remote controller – damage to the device may result. Avoid getting the controller wet.

OPERATING THE AIR CONDITIONER WITH THE REMOTE CONTROLLER

IMPORTANT

When making changes to the remote control settings pay particular attention to where the selection is. If there is no input to the control it will return to the idle state in 10 seconds. Also remember to always point the remote at the unit while making changes.

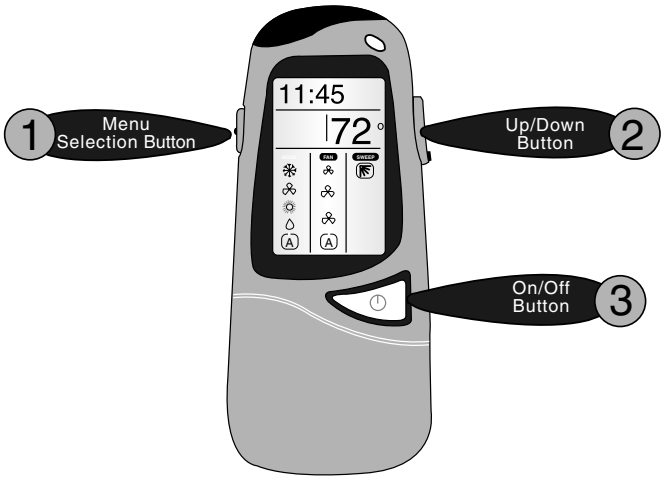

Turning the Air Conditioner ON:

• Press the ON/OFF button 3; the remote controller display lights and the air conditioner starts operating using the last setting entered.

Changing the Air Conditioner's Operation Modes

• Select the MODE by pressing 1.

• Choose the desired mode by pressing 2.

• Press the On/Off button 3 to transmit your selections to the air conditioner.

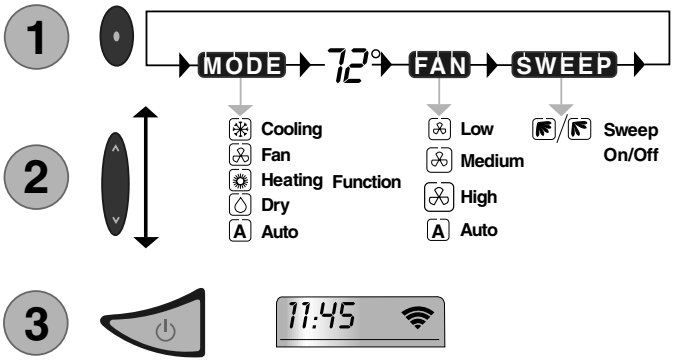

CHANGING THE FAN SPEED

• Select the FAN menu by pressing 1.

• Choose the desired fan speed by pressing 2.

NOTE: When the air conditioner is operating in DRY mode the fan speed can not be changed. The fan operates at Low speed in this mode.

• Press the ON/OFF button 3 to transmit your selections to the air conditioner.

CHANGING THE TEMPERATURE SETTING

You can make a change of the temperature setting by pressing 2. **Make sure to point the remote controller toward the air conditioner. The symbol appears each time you press the button.**

OR

• Select the TEMPERATURE display by pressing 1.

1. The degree symbol (°) flashes next to the digits when the TEMPERATURE display is selected.

• Select the desired temperature by pressing 2.

1. The available temperature range is 54°F to 86°F.

• Press the On/Off button 3 to transmit your selections to the air conditioner.

CHANGING THE AIRFLOW DIRECTION

• Select the SWEEP menu by pressing 1.

• Press the top side of the Up/Down button 2: the airflow deflector moves up and down continuously and the airflow symbol displays motion.

• Press the bottom side of the Up/Down button 2; the airflow deflector stops at a given angle and the airflow symbol remains in a fixed position.

(MORE)

• Press the On/Off button (3) to transmit your selections to the air conditioner

1. If you choose to place the airflow deflector in a fixed position, the deflector stops at the angle in which it was located when you pressed the On/Off button.

NOTE: When you have finished selecting the various menus and choosing the desired settings, point the remote controller at the air conditioner and press the On/Off button (3). Two beeps sound and the air conditioner starts operating according to your selected settings. The settings chosen stop flashing and remain lit.

PROGRAMMING AIR CONDITIONER OPERATION PERIODS

Through a simple process you can program the air conditioner to operate at your convenience. First, you must set the clock.

SETTING THE CLOCK

• Slide down the front cover of the Remote controller below the On/Off switch.

• Press the Clock Set button with an appropriate object, such as a ballpoint pen.

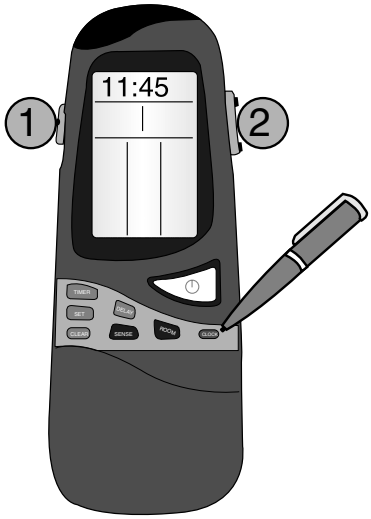

• Press (2) to set the current minutes

• Press (1); the hours digits flash

• Press (2) to set the current hour

• Press the Clock Set button to confirm the current time setting.

The remote controller reverts to its previous display and the clock is displayed.

SETTING OPERATION START/STOP TIMES

IMPORTANT

Make sure to point the remote controller at the air conditioner while pressing the TIMER SET button.

You can use the Timer to pre-set air conditioner operation Start/Stop times. You can set up to three different Timer periods within **24 hours,** spaced at up to 10 hours apart.

• Slide down the front cover of the Remote below the On/Off switch.

• Press the TIMER button. Each time you press on the TIMER button, the next Start or Stop set time appears on the display.

• The TIMER display appears:

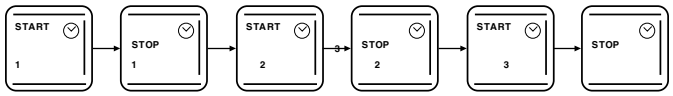

• Press button (2) to set the time.

• Press the SET button to set the displayed time, or push the timer button to get to the desired time period.

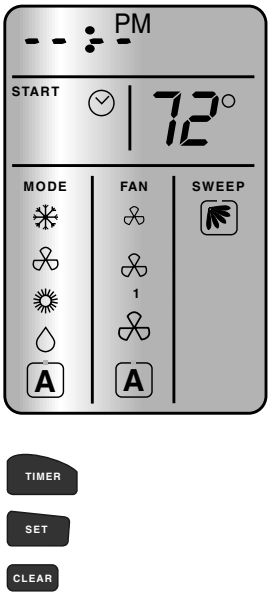

NOTES:

1. Time increments in 10 minute intervals.
2. The TIMER lamp on the air conditioner display lights whenever a timer period is set (see Page 9 for location).
3. The remote controller displays the Timer period Start/Stop time which is nearest the current time. If the air conditioner is ON, the word "STOP" + the Timer period are displayed; If the air-conditioner is OFF, the word "START" + the Timer period are displayed.
4. If no buttons are pressed during ten seconds, the remote controller reverts to its previous display.
5. If you make an error that you want to correct, you must cancel the programmed Timer period settings (see Page 7).

SETTING THE SLEEP TIMER PERIOD

The fourth Timer period is marked SLEEP. When SLEEP is active, the desired temperature is updated while you sleep. The room air temperature gradually rises (COOLING MODE) until this Timer period is exited. At the end of the Timer period, the desired temperature returns to its previous setting.

(MORE)

• Scroll through the Timer periods as explained in the previous section

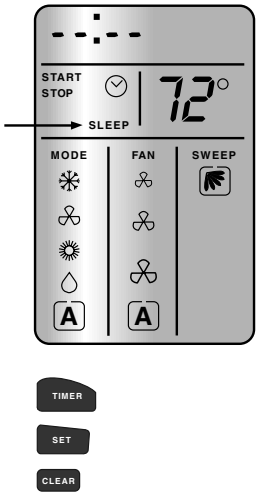

• Choose the SLEEP Timer period

• Enter the desired Start/Stop times (SLEEP-START and SLEEP-STOP).

• Press the SET button.

SETTING A DAILY TIMER PERIOD

You can set the Timer periods so that the air conditioner operates automatically at the set times on a daily basis. This can be individually set for Timer periods 1, 2, 3 or SLEEP.

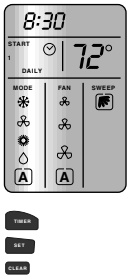

NOTE: The daily timer operates only when there is a direct line of sight between the remote controller and the air conditioner.

• Press the TIMER button to select the Timer period that you want to activate daily.

• Press the SET button until the word DAILY appears on the display.

• Press the SET button to confirm DAILY operation for the selected Timer period. Make sure you point the remote controller at the air conditioner while you press the SET button.

CANCELING A DAILY TIMER PERIOD

Follow the steps for setting a DAILY Timer Period except in the second step; press the SET button until the work DAILY disappears from the display.

CANCELING A TIMER PERIOD START/STOP TIME

• Press the TIMER button to select the Timer period (1,2,3, or SLEEP) which you want to cancel

• Press the CLEAR button to cancel the selected Timer period; the Start/Stop times disappear from the display.

• **Press the SET button to confirm the cancellation. Make sure you point the remote controller at the air conditioner while you press the SET button.**

CANCELING ALL TIMER PERIOD START/STOP TIMES

• Press the TIMER button

• Hold the CLEAR button down until all the Timer period Start/Stop times disappear from the display.

• Check that the TIMER lamp on the air conditioner is off. (see page 9 for location)

ROOM AIR TEMPERATURE DISPLAY

When the remote controller is OFF: the current room temperature is displayed.

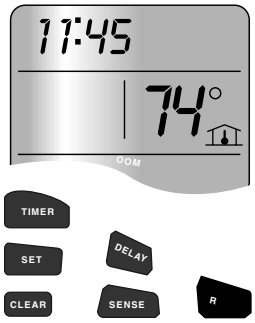

When the remote controller is ON:

• Slide down the front cover on the remote controller below the On/Off Switch

• Press the ROOM button to display the current room air temperature. The temperature is displayed for a number of seconds.

DELAYED START/STOP OPERATION

You can quickly and easily set the required Start or Stop delay. When the air conditioner is ON:

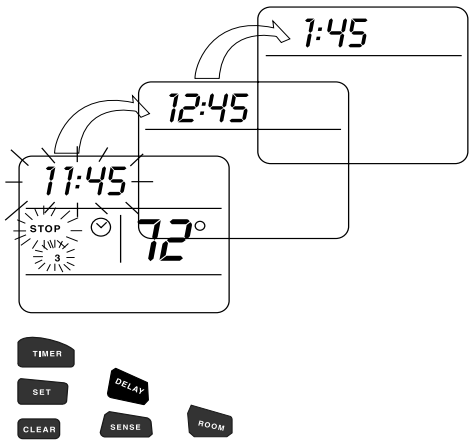

• Press the Delay button. The clock advances one hour, while the word STOP and the number 3 flash.

• Each additional pressing of the DELAY button advances the clock by one hour.

• Make sure you point the remote controller at the air conditioner while you press the DELAY button. The word STOP will stop flashing when the command has been transmitted to the air conditioner.

(MORE)

When the air conditioner is OFF:

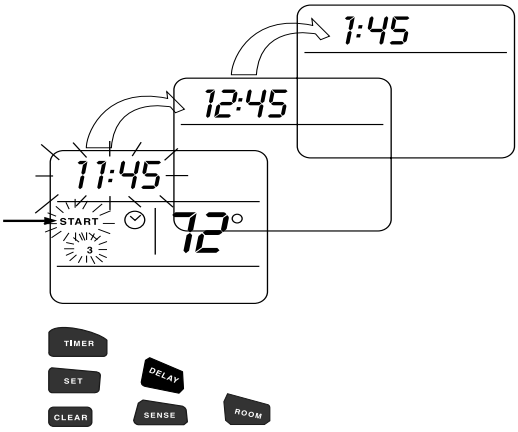

• Press DELAY button. The clock advances one hour, while the word START and the number 3 flash.

• Each additional pressing of the DELAY button advances the clock by one hour.

• Make sure you point the remote controller at the air conditioner while you press the DELAY button. The word START will stop flashing when the command has been transmitted to the air conditioner.

• TO CANCEL THE DELAY, FOLLOW THE INSTRUCTIONS IN THE "CANCELING A TIMER PERIOD START/STOP TIME" SECTION. THE DELAY SETTING IS STORED IN TIMER PERIOD NO. 3.

USING THE LOCAL SENSE FUNCTION (2 WAY REMOTE)

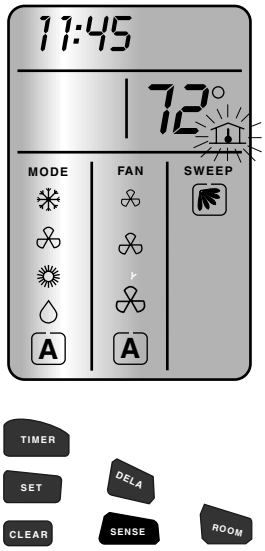

The remote controller can operate so that it transmits the room air temperature to the air conditioner at regular intervals from wherever it is located in the room.

The air conditioner operates so that the room air near the remote controller reaches the desired temperature.

• Press the SENSE button. The house symbol next to the temperature display flashes.

• Place the remote controller in the desired room location.

• **Make sure that there is a direct line of sight between the remote controller and the air conditioner.**

• To cancel the Local Sensor, press the SENSE button; the house symbol disappears from the display.

⚠ WARNING

Do not place remote controller in a drawer or near a warm/hot appliance as the air conditioner will attempt to cool the remotes environment.

OPERATING THE AIR CONDITIONER FROM THE DISPLAY PANEL

(OR IF REMOTE CONTROLLER IS LOST)

(Console shown)

Turning the Air Conditioner ON:

• Move the Operation Switch to the AUTO position. The air conditioner operates at a temperature setting of 74°F, automatically selecting the required operation mode and fan speed.

(High wall shown)

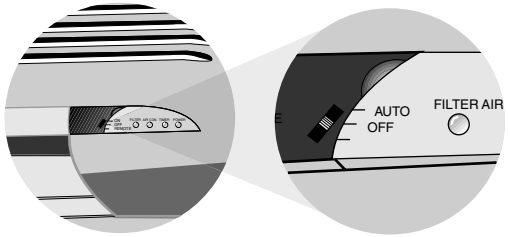

Turning the Air Conditioner OFF:

• Move the Operation Switch to the OFF position.

(High wall shown)

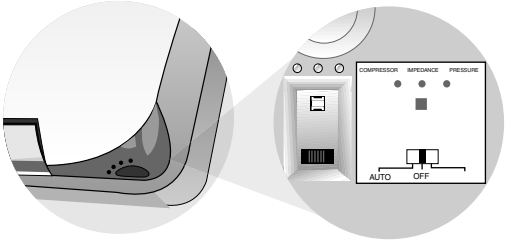

Returning to Remote Controller Operation:

• Move the Operation Switch to the REMOTE position.

• The remote controller operates the air conditioner.

ENERGY-SAVING TIPS

Your Carrier unit is designed to be highly efficient in energy savings. Follow the below recommendations for even greater efficiency.

1. Select thermostat setting that suits your comfort needs and leave thermostat at that chosen setting.
2. Keep unit filter clean. The filter is very efficient in removing

(MORE)

airborne particles. More frequent cleaning may be necessary depending on indoor air quality.

3. Use drapes, curtains, or shades to keep direct sunlight from heating room.
4. Do not obstruct front grille air intake section.
5. Start your air conditioner before outdoor temperature, cooking heat, or gatherings of people make room hot and uncomfortable. This avoids initial period of discomfort while unit is cooling off room.

NOTE: If a circuit breaker is tripped repeatedly, or fuse is blown more than once, contact a qualified electrician.

THE DISPLAY PANEL

The lamps on the display panel indicate various operation modes and conditions.

Display panel features and their use/description appear below:

Diagram Callout	Feature	Use/Description
A	I.R. Receiver	• Receives transmissions from the remote controller
B	FILTER Lamp	• Lights when the air filters require cleaning
C	AIR CON. Lamp	• Lights when the air conditioner operates
		• Flashes when defrosting
D	TIMER Lamp	• Lights when TIMER Start or Stop time is set
E	POWER Lamp	• Lights when the air conditioner is connected to the electrical supply of the proper line voltage
F	IMPEDANCE Lamp	• Lights when a voltage problem exists
G	COMPRESSOR Lamp	• Lights when compressor operates
		• Flashes when the air conditioner is on standby
H	PRESSURE Lamp	• Lights as low pressure warning
		• Flashes as a high pressure warning
I	Operation Switch	• Turns the air conditioner ON, OFF, or puts it in AUTO operation

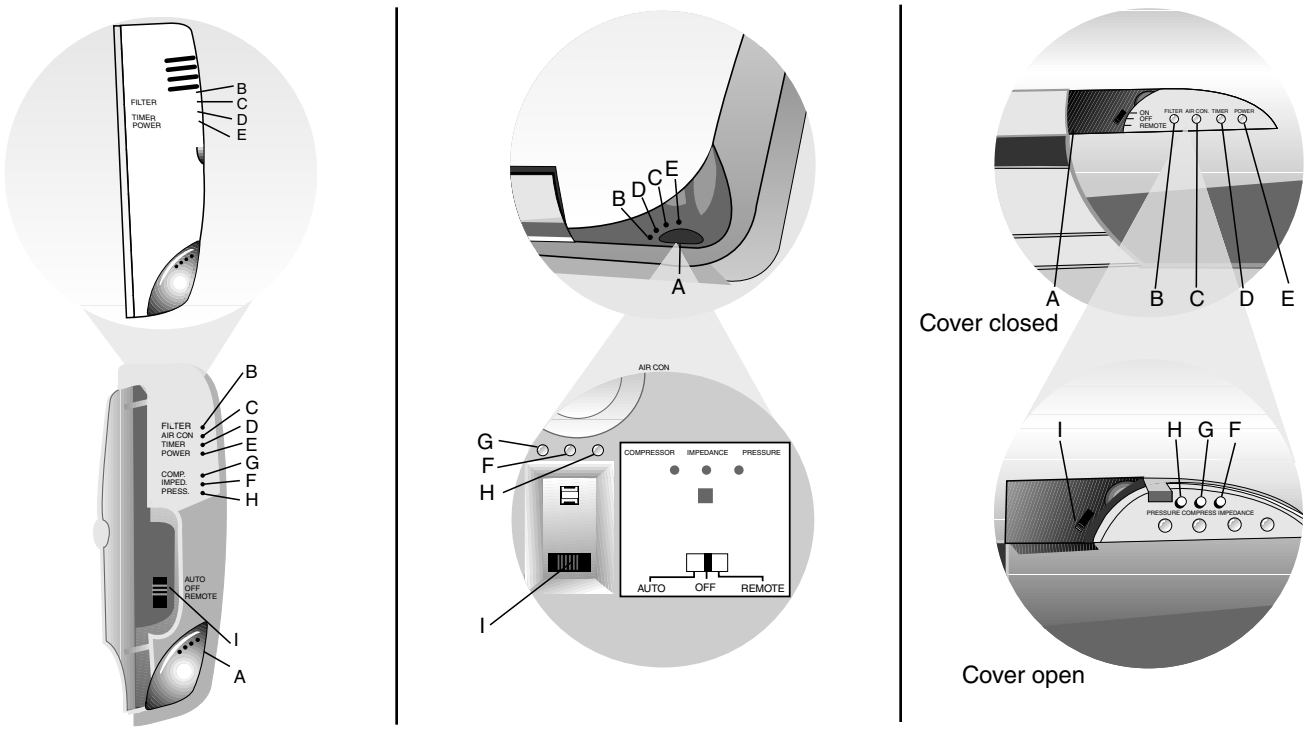

Console **Highwall** **Highwall**

MORE ON NEXT PAGE

53DFST2-NP-BRY

53DFS250-SL-BRY

53DFS250-FS-BRY
Fig #3

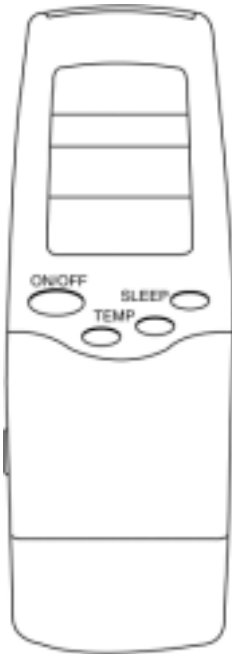

Remote Control
High Wall Systems
Fig #1

Remote Control
Console Systems

Installation

Installation Diagrams – Section 22

619E 009 & 012

619E 018 & 024

TYPICAL INSTALLATION — HIGH-WALL SYSTEMS, 9,000 AND 12,000 BTUH
(Cooling-Only System Shown)

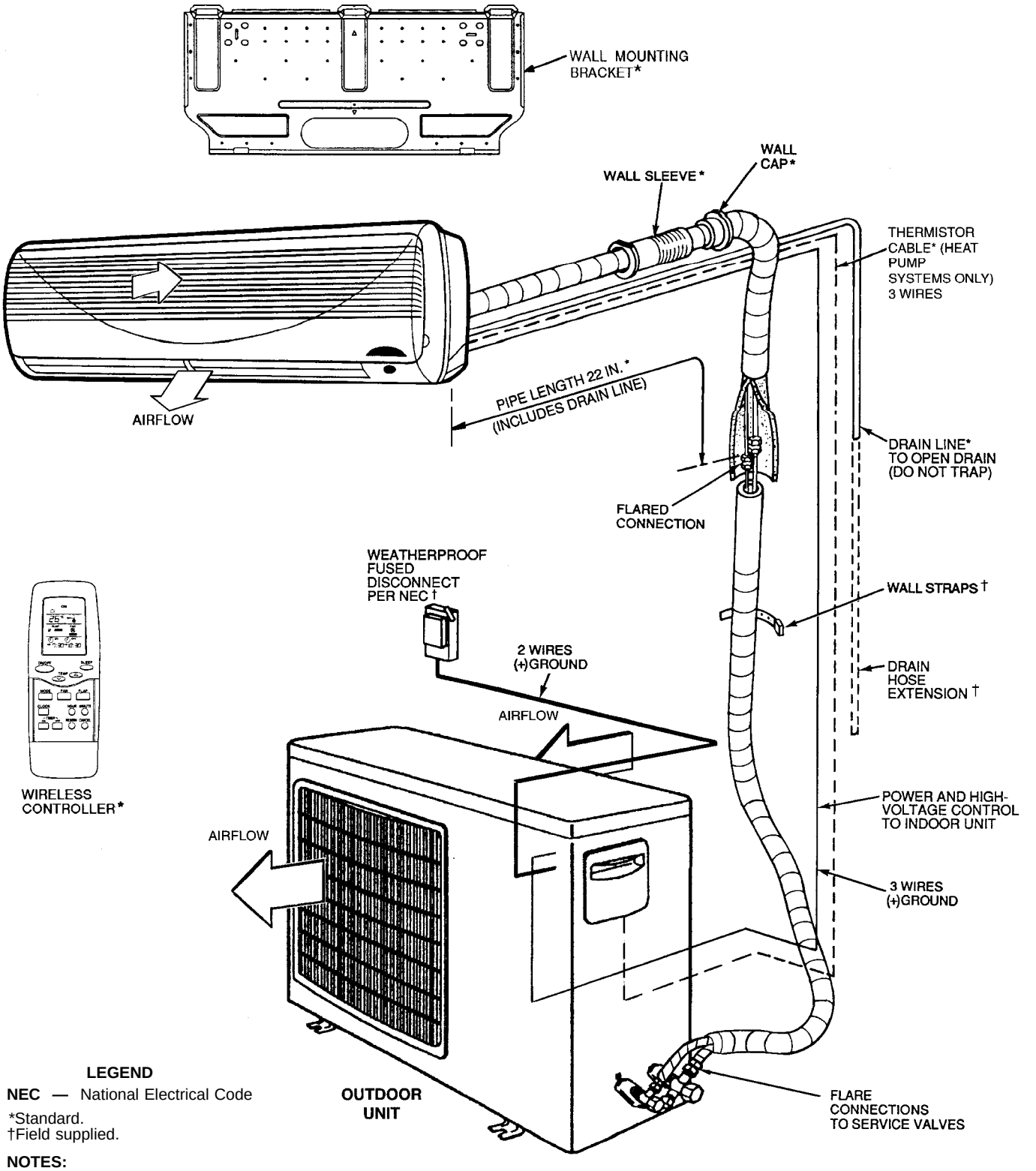

LEGEND

NEC — National Electrical Code

*Standard.
†Field supplied.

NOTES:

1. All piping must follow standard refrigerant techniques.
2. Do not install a filter drier in mixed phase liquid line.
3. All wiring must comply with applicable local and national codes.
4. Capillary tube expansion device (cooling-only systems only) is located in the outdoor unit. Both refrigerant lines must be insulated.
5. Wiring and piping shown are general points-of-connection guides only and are not intended to include all details for a specific installation.
6. Insulate condensate line drain if installed in a conditioned space.

TYPICAL INSTALLATION — HIGH-WALL SYSTEMS, 18,000 AND 24,000 BTUH
(Cooling Only System Shown)

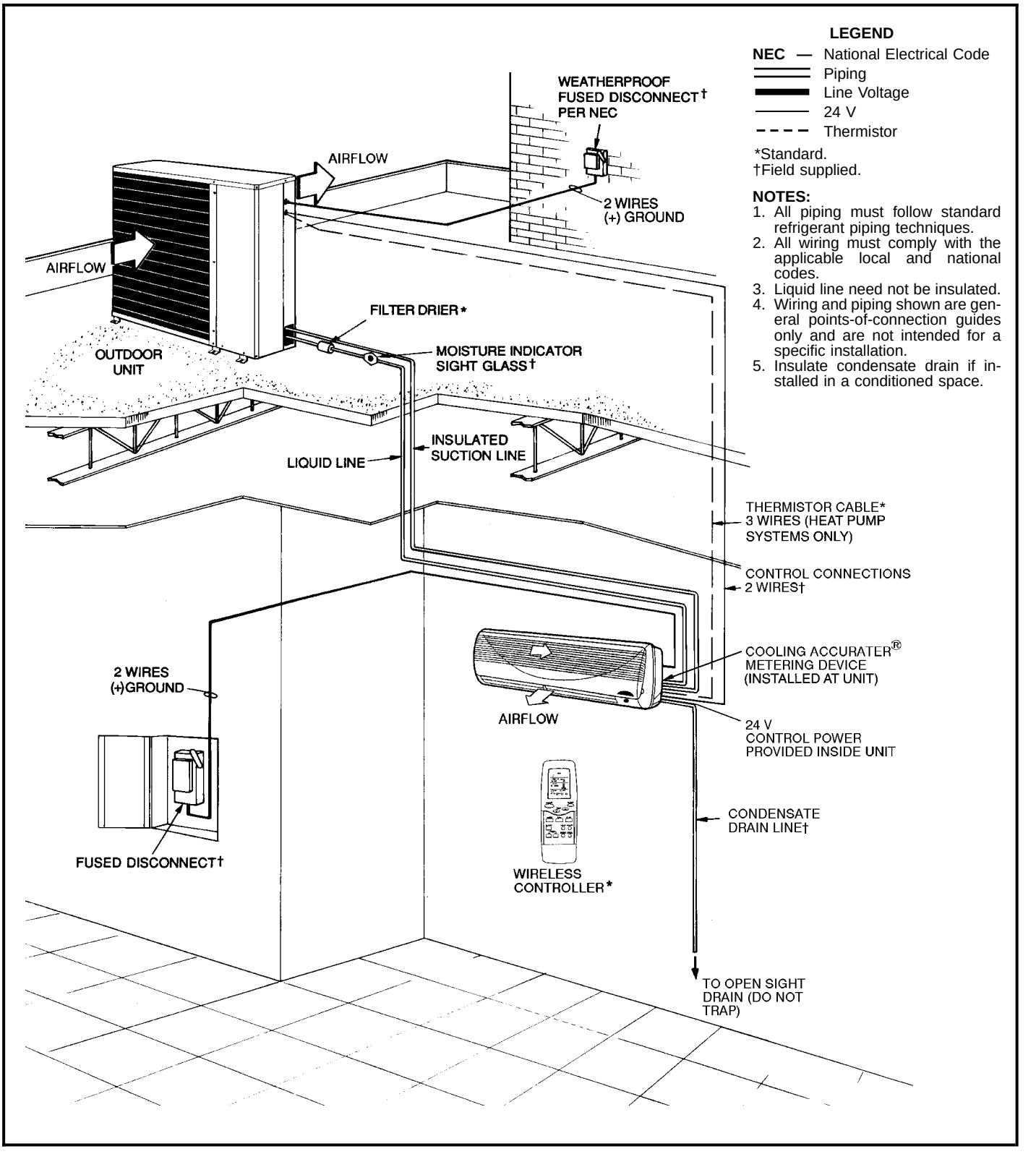

Installation

Installation Diagram – Section 22

Console

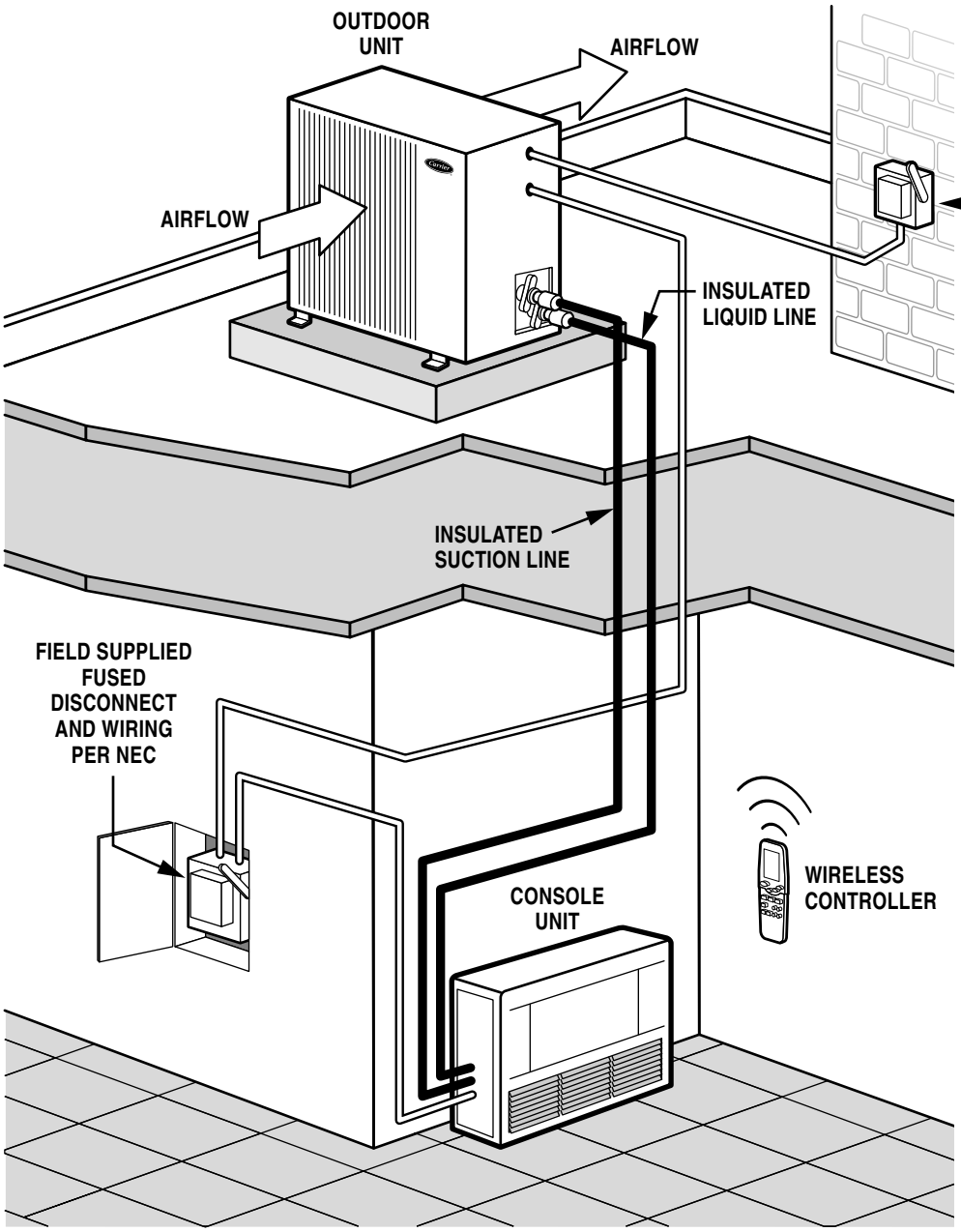

NOTES:

1. All piping must follow standard refrigerant piping techniques.
2. All wiring must comply with the applicable local and national codes.
3. Wireless remote controller is required.
4. Wiring and piping shown are general points-of-connection guides only and are not intended for a special installation.
5. Insulate condensate line if run above a conditioned space.

Installation

Installation Diagram – Section 22

619F

TYPICAL INSTALLATION — IN-CEILING CASSETTE SYSTEMS

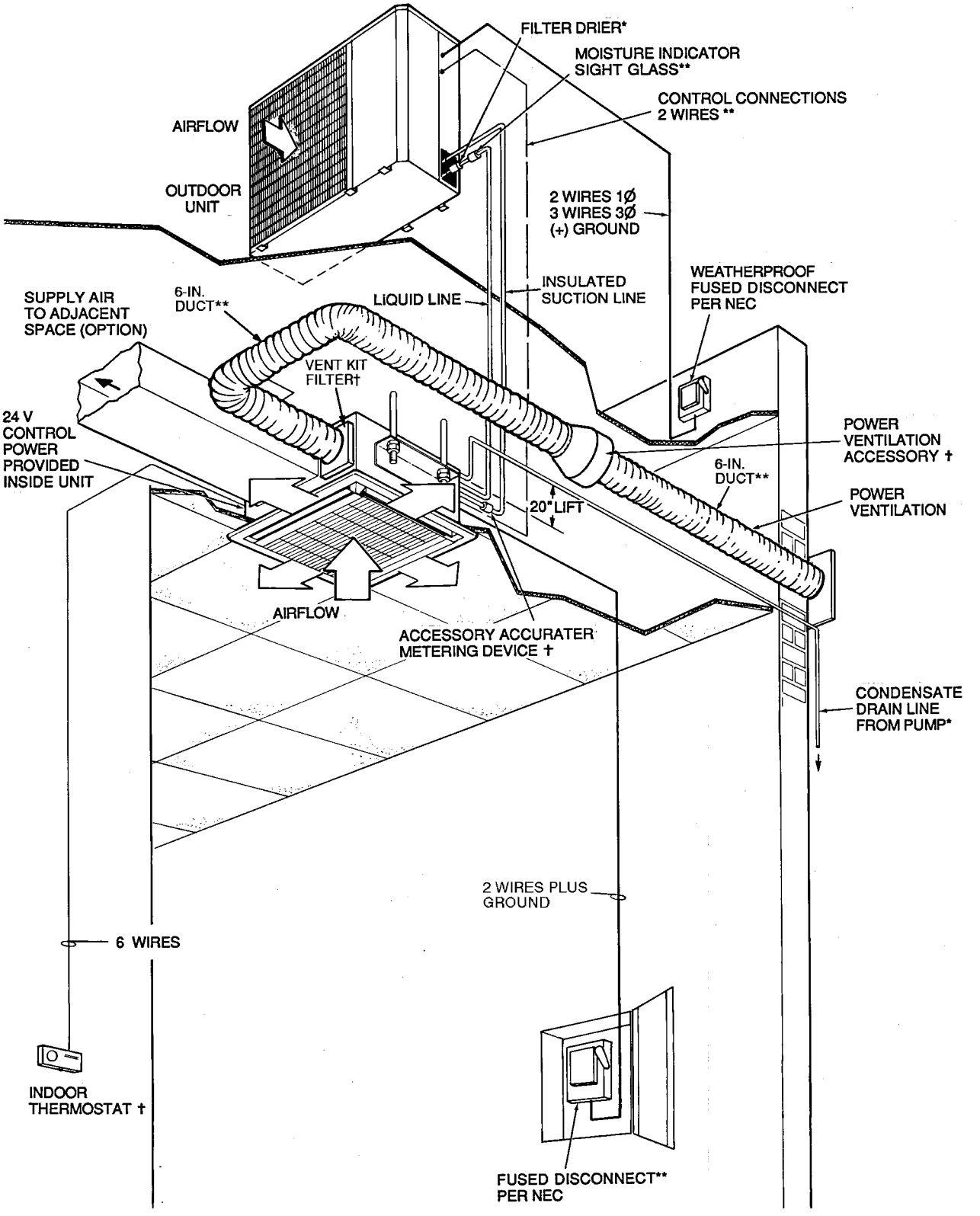

LEGEND

ϕ — Phase
NEC — National Electrical Code
Piping
Line Voltage
24 V

*Standard.
†Accessory item.
**Field supplied.

NOTES:

1. All piping must follow standard refrigerant techniques.
2. All wiring must comply with applicable local and national codes.
3. Liquid line need not be insulated.
4. Accessory cooling AccuRater® kit is required.
5. Wiring and piping shown are general points-of-connection guides only and are not intended for a specific installation.
6. Insulate condensate line if installed in a conditioned space.

Installation

Service – Section 23

619E

SERVICE – High Wall Systems

WARNING: When servicing unit, turn off all electric power to unit to avoid shock hazard or injury from rotating parts.

CAUTION: Do not vent refrigerant to atmosphere when servicing unit. Recover refrigerant during system repair or unit removal.

DIAGNOSTIC CODES

This unit is equipped with a microprocessor control, which continuously monitors the operation of the unit. If an operational fault is detected, a fault is indicated by the flashing of the green ‘‘UNIT ON’’ light on the front of the fan coil unit. A red LED (light-emitting diode) indicator light, located on the control board in the control box of the indoor unit, will emit a flash code, which can be used to troubleshoot a system problem. The control will continue to monitor the unit and, if the conditions that cause the fault are cleared, the unit will return to normal operation. If the fault code is present for 5 cycles of the unit, the unit will be locked out and the alarm is indicated by the flashing of the green ‘‘UNIT ON’’ light on the front of the fan coil unit. To access the LED indicator light, remove the front cover of the unit by removing the 3 screws holding it in place. If the LED indicator light continuously flashes on for one second, then off for one second, the control is functioning properly and no fault is present. A fast flashing LED indicates that a fault has been detected See Trouble Shooting & Fault Code Section #27 for indicators. If the system does not operate and the LED indicator does not flash, either the power to the control board is off, or the control board has failed.

NOTE: If the LED light continuously flashes on for one second, then off for one second, the control is functioning properly and no fault is present.

SYSTEM TESTS

System tests listed below are performed continuously by the microprocessor. If a fault is indicated, then the system allows only limited operation until the problem is resolved. If the problem resolves itself, then the code is cleared and operation resumes.

Thermistor Tests

Each thermistor is tested for high limit out of range (shorted condition) and low limit out of range (open condition). If the thermistor is out of range, the fault status indicator comes on and the LED flashes the appropriate fault code.

Thermistors

Proper thermistor location and correct temperature sensing are critical to unit operation. Good thermal contact is also required. Thermistor cable assemblies are provided with fan coil units to run between indoor and outdoor units. High voltage and thermistor cable assemblies should not touch each other, and cable runs may be extended up to 200 feet. With unit running, the thermistor integrity may be checked by measuring the d.c. voltage across the two thermistor connections. See Thermistor Properties Table #10

Compressor Failure

If the System is in Cooling or Dehumidification Mode after 5 minutes of operation, if the temperature of the indoor coil is not 4° F less than at the time the call for cooling started, then a compressor failure is indicated on the remote controller LCD display. If the System is in Heat Pump Heating Mode after 5 minutes of operation, if the temperature indicated by the outdoor coil thermistor is not 4° F less than at the time the call for heating started, then a compressor failure is indicated.

Reversing Valve Failure

If the System is in Cooling or Dehumidification Mode after 5 minutes of operation, if the temperature at the indoor coil is 4° F more than at the time the call for cooling started, then a reversing valve failure is indicated. If the System is in Heat Pump Heating Mode after 5 minutes of operation, if the temperature indicated by the outdoor coil is 4° F more than at the time the call for heating started, then a reversing valve failure is indicated.

SYSTEM SAFETIES AND INTERLOCKS

Indoor Fan Failure

If the indoor fan rpm shows greater than 800 rpm for 30 seconds with the fan in the off mode, then this test indicates an indoor fan failure. Also, if the indoor fan rpm is greater than 1700 rpm for 30 seconds, then this test indicates an indoor fan failure.

(MORE)

Compressor Short Cycling Protection

There is a time delay of 3 minutes between compressor turning off and turning back on.

Indoor Coil Freeze Protection (Cooling or Dehumidification Mode Only)

If the indoor coil temperature is less than or equal to 32 F for 10 minutes after the compressor has started, then the compressor and outdoor fan are turned off. The indoor fan continues to run at the user-selected speed until the indoor coil reaches 44 F. At that time, the compressor and outdoor fan will restart.

Indoor Coil High Temperature Protection (Heat Pump Systems Only)

If indoor coil temperature is greater than or equal to 135 F, the outdoor fan shuts down. The outdoor fan will restart automatically when the indoor coil temperature drops to 120 F.

Table 10 — 40QN Thermistor Properties*

TEMP (F)	MINIMUM OHMS	NOMINAL OHMS	MAXIMUM OHMS	MINIMUM THERMISTOR VOLTS — DC	NOMINAL THERMISTOR VOLTS — DC	MAXIMUM THERMISTOR VOLTS — DC
-40	303,300	342,700	386,200	4.80	4.82	4.84
-30	211,500	237,276	265,444	4.72	4.75	4.77
-20	149,721	166,689	185,146	4.61	4.65	4.68
-10	107,379	118,776	130,973	4.48	4.52	4.55
0	77,281	85,677	93,867	4.30	4.35	4.40
10	56,567	62,617	68,205	4.09	4.16	4.21
20	42,661	46,302	50,129	3.86	3.92	3.98
30	32,043	34,580	37,220	3.59	3.66	3.72
32	30,300	32,550	35,120	3.53	3.60	3.66
40	24,061	26,118	27,960	3.28	3.36	3.43
50	18,650	19,900	21,180	2.99	3.05	3.11
60	14,402	15,312	16,219	2.67	2.73	2.79
70	11,247	11,883	12,518	2.36	2.42	2.47
80	8,820	9,299	9,779	2.06	2.11	2.16
90	6,846	7,339	7,754	1.76	1.83	1.88
100	5,487	5,829	6,187	1.52	1.57	1.63
110	4,367	4,667	4,976	1.29	1.34	1.40
120	3,502	3,760	4,026	1.09	1.14	1.19
130	2,830	3,051	3,281	0.92	0.97	1.02
140	2,300	2,489	2,687	0.77	0.82	0.87
150	1,880	2,045	2,216	0.65	0.69	0.74
160	1,547	1,688	1,836	0.55	0.59	0.63
170	1,280	1,402	1,531	0.46	0.50	0.53
180	1,065	1,170	1,282	0.39	0.42	0.45
190	890	982	1,078	0.33	0.36	0.39
200	748	828	913	0.28	0.31	0.33
210	631	701	766	0.24	0.26	0.28
212	611	678	751	0.23	0.25	0.28

*Circuit volts = 5 vdc.

Installation

Service – Section 23

Console

SERVICE - Under Ceiling & Console Fan Coils

WARNING: When servicing unit, turn off all electric power to unit to avoid shock hazard or injury from rotating parts.

CAUTION: Do not vent refrigerant to atmosphere when servicing unit. Recover refrigerant during system repair or unit removal.

BEFORE CALLING FOR SERVICE

You may save the cost of a service call by doing the following:

1. Be sure main power to system is turned on.
2. Press Mode button until OFF is displayed. Wait 5 minutes.
3. Press Mode button until either COOL or HEAT is displayed (as desired).
4. Adjust remote thermostat set point to desired room temperature. If system starts within a few minutes, you may not need service. If system does not operate properly, check Trouble Shooting Section #27 for typical solutions.

If System Fails To Operate

Be sure:

- unit ON/OFF switch is in ON position
- fuse or circuit breaker is not tripped

Installation

Service – Section 23

538 A & B

538 S

538 J

Console

SERVICE – 538A & 538B

WARNING: Before performing recommended maintenance, be sure unit main power switch is turned off. Failure to do so may result in electrical shock or injury from rotating fan blade.

OUTDOOR FAN

A reinforced wire mount holds the outdoor fan assembly in position. See Fig. 7 for Cooling Units and Fig. 8 for Heat pump Units for proper mounting positions.

HIGH-PRESSURE RELIEF VALVE

Valve is located in compressor. Relief valve opens at a pressure differential of approximately 450 +/- 50 psig between suction (low side) and discharge (high side) to allow pressure equalization.

INTERNAL CURRENT AND TEMPERATURE SENSITIVE OVERLOAD

Control resets automatically when internal compressor motor temperature drops to a safe level (overloads may require up to 45 minutes to reset). When an internal overload is suspected of being open, check by using an ohmmeter or continuity tester.

PUMPDOWN PROCEDURE

The system may be pumped down in order to make repairs on low side without losing complete refrigerant charge.

1. Attach pressure gage to suction service valve gage port.
2. Front seat the liquid line valve.

CAUTION: The outdoor unit holds only the factory designated amount of refrigerant. Additional refrigerant may cause units to relieve pressure through compressor internal pressure relief valve (indicated by a sudden rise of suction pressure) before suction pressure reaches 5 psig. If this occurs, shut off unit immediately, front seat the vapor valve, and remove and recover excess refrigerant following accepted practices.

3. Back seat valve, start unit, and run until suction pressure reaches 5 psig.
4. Shut unit off and front seat suction valve.
5. De-pressurize low side of unit and recover refrigerant following accepted practices.

FILTER DRIER (If Installed)

Whenever the accessory, field-installed moisture liquid indicator (if installed) shows presence of moisture, replace the filter drier. If no indicator is installed, replace the filter drier whenever system has been opened for service or maintenance.

HIGH-PRESSURE SWITCH

This switch, located on discharge line, protects against high discharge pressures caused by such events as overcharge, outdoor fan motor failure, system restriction, etc. It opens on pressure rise at about 426 psig. If system pressures go above this setting during abnormal conditions, the switch opens.

WARNING: DO NOT attempt to simulate system abnormalities. High pressures pose a serious safety hazard.

The High-pressure switch is checked with an ohmmeter. If system pressure is below 320 psi (cooling) or 426psi (heat pump) switch shows continuity. The high pressure switch will reset automatically after the CLO (compressor lockout switch) has been reset, and the time delay device has completed its timing cycle.

NOTE: If pressure switch needs to be replaced, there is a Schrader valve located under the switch so that system will not need to be evacuated.

LOW-PRESSURE

This switch is mounted on the vapor line for Cooling Only Units and the liquid line for Heat Pump Units, and has fixed, non-adjustable settings. On Heat Pump units, this switch is bypassed during defrost mode, and also for the first 2 minutes of heating operation after defrost. This is accomplished by a time delay relay to prevent nuisance tripping of the loss-of-charge switch. To check pressure switch, attach pressure gage to service valve gage port. Slowly close shutoff valve and allow compressor to pump down. Do not allow compressor to pump down below 2 psig. Compressor should shut down when pressure drops to cutout pressure as shown in Physical Data Section #8, and should restart when pressure builds up to cut-in pressure shown, after CLO (compressor lockout switch) has been reset and accessory Time Guard device has completed its timing cycle.

(MORE)

NOTE: If pressure switch needs to be replaced, there is a Schrader valve located under the switch so that system will not need to be evacuated.

CRANKCASE HEATER (If Unit is so Equipped)

Heater prevents refrigerant migration and compressor oil dilution during shutdown when compressor is not operating. If crankcase heater is de-energized for more than 6 hours, both compressor service valves must be closed. Crankcase heater is powered by *high-voltage* power of unit. It is connected across the line side of the contactor and operates continually. Use extreme caution when trouble-shooting this device with unit power on.

To troubleshoot:

1. Apply voltmeter across crankcase heater leads to see if heater voltage is on. *Do not touch heater.* Carefully feel area around crankcase heater; if warm, crankcase heater is probably functioning.
2. With power off and heater leads disconnected, check across leads with ohmmeter. Do not look for a specific resistance reading. Check for resistance or an open circuit, and change heater if an open circuit is detected.

SERVICE VALVES

The service valves in the outdoor unit come from the factory front seated. This means the refrigerant charge is isolated from the line-set connection ports. To prevent damage to the valve, use a wet cloth or other accepted heat sink material on the valve before brazing. The service valves must be back seated (turned counter-clockwise until seated) before the service port caps can be removed and the hoses of gage manifold connected. In this position, refrigerant has access from and through outdoor and indoor unit. The service valve cannot be field repaired; therefore, only a complete valve or valve stem seal and service port caps are available for replacement.

DEFROST CONTROL

The control, which consists of defrost control board and defrost thermostat, interrupts the normal system heating operation to defrost the outdoor coil, *if the coil saturated suction temperature indicates freezing temperatures.* Defrost control board can be field set to check need for defrost (every 30, 50, or 90 minutes of operating time) by connecting the jumper labeled W1 (on the circuit board) to the spade terminal for the defrost time desired. The board is factory set for 90 minutes. The defrost period is field selectable, depending upon geographic areas and defrost demands. Control board has additional feature that allows unit to restart in defrost cycle if room thermostat is satisfied during defrost. Defrost control simultaneously stops outdoor fan, energizes reversing valve solenoid to return system to cooling cycle (out-door unit as condenser, indoor unit as evaporator), and activates accessory electric heater (if so equipped). The defrost timer limits defrosting period to 10 minutes. Normally, the frost is removed and the defrost thermostat contacts open to terminate defrosting before 10 minutes have elapsed. When defrosting is terminated, the outdoor fan motor is energized and reversing valve solenoid is de-energized, returning unit to heating cycle.

NOTE: If a Heat Pump unit is matched with a High Wall Unit the demand defrost will override the timed defrost. See fan coil unit installation instructions for details.

REVERSING VALVE

In heat pumps, changeover between heating and cooling modes is accomplished with a valve that reverses flow of refrigerant in system. The reversing valve solenoid can be checked with power off using an ohmmeter. Check for continuity and shorting to ground. With the control circuit (24 v) power on, check for correct voltage at solenoid coil, and for burned or overheated solenoid. With unit operating, other items can be checked, such as frost or condensate on refrigerant lines. Using a remote measuring device, check inlet and outlet line temperatures. *Do not* touch lines. If reversing valve is operating normally, inlet and outlet temperatures on appropriate lines should be similar. Any temperature difference would be due to heat loss or gain across valve body. Temperatures are best checked with a remote reading electronic-type thermometer with multiple probes. Figures 9 and 10 show test points on reversing valve for recording temperatures. Insulate points for more accurate reading.
If valve is defective:

1. Shut off all power to unit.
2. Recover all charge from system.
3. Un-sweat valve.
4. Install new valve (wrap valve with a wet rag to prevent overheating while brazing).
5. After valve is brazed in, check for leaks.
6. Evacuate and charge system. Operate system in both modes several times to be sure valve functions properly.

(MORE)

Discharge Temperature Switch (DTS) Heat Pump Only

Switch used only on sizes 030 and 036 with scroll compressors, senses high discharge temperature levels reached under extreme operating conditions (low charge or low evaporator airflow) Approximate cut in and cut out temperatures 290f and 140f respectively.

Thermistors

The outdoor coil temperature thermistor and outdoor air temperature thermistor are used only with duct free systems that use a microprocessor control. Refer to separate installation instructions for High Wall Systems.

Time Delay Relay (TDR1) Heat Pump Only

Relay used only on sizes 030 and 036 with scroll compressors, ensures that compressor comes to a complete stop before restarting.

Time Delay Relay (TDR2) Heat Pump Only

Relay prevents nuisance tripping of the low-pressure switch during system switchover after defrost.

Compressor Lock out Switch – Heat Pump Only

Units with compressor lockout protective device shut down on any safety trip. Determine reason for safety trip. To restart, turn the thermostat to OFF position and then to COOL position.

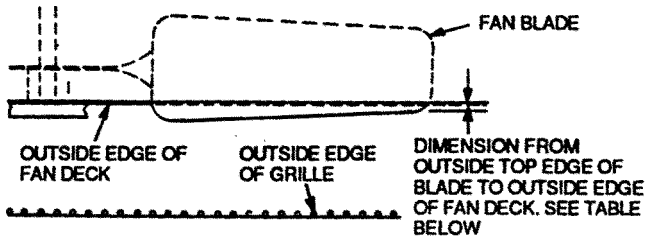

538A UNIT SIZE — in. (mm)		
018	024, 030, 036 (1Ø)	036 (3Ø), 048, 060
.433 (11)	.709 (18)	.16 (4)

Fig. 7 - Condenser-Fan Mounting Positions

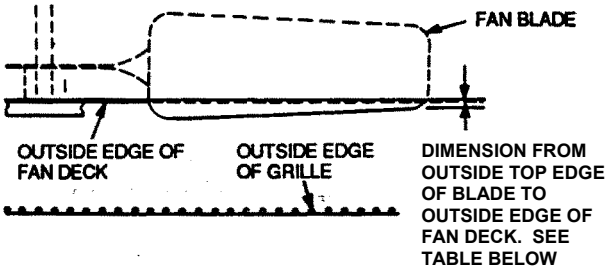

538B UNIT SIZE-In. (mm)		
018	024, 030, 036	048, 060
.433 (11)	.709 (18)	.16 (4)

Fig. 8 — Outdoor Fan Mounting Positions

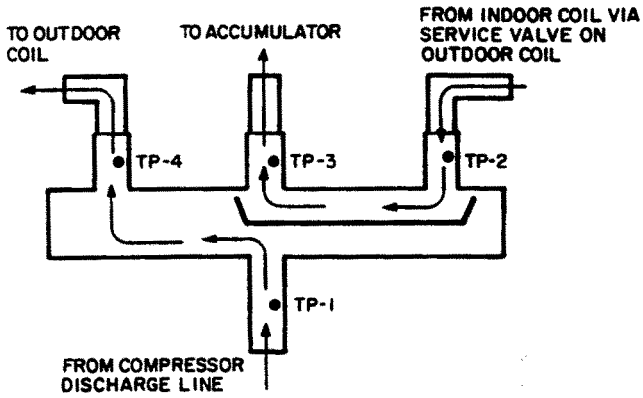

LEGEND

TP — Test Point

Fig. 9 — Reversing Valve (Cooling Mode or Defrost Mode, Solenoid Energized)

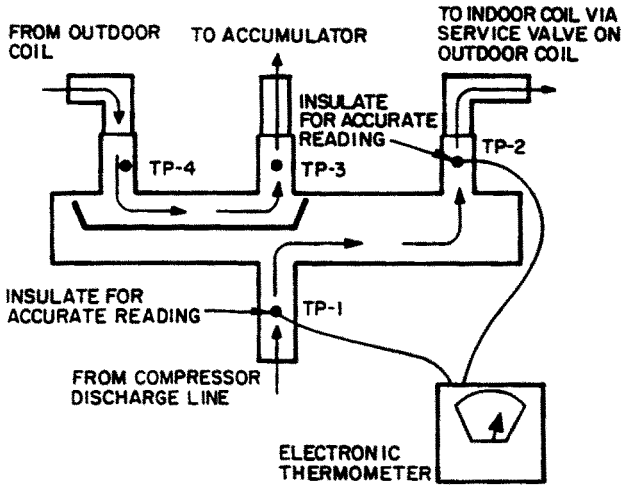

LEGEND

TP — Test Point

Fig. 10 — Reversing Valve (Heating Mode, Solenoid Deenergized)

SERVICE – Multi Split

WARNING: Before performing recommended maintenance, be sure unit main power switch is turned off, and be sure all disconnects for indoor fan coil units are open. These systems typically have one disconnect per fan coil unit. Failure to turn off unit main power and open all disconnects may result in electrical shock or injury from rotating fan blade.

OUTDOOR FAN

A reinforced wire mount holds the outdoor fan assembly in position. See Fig. 13 for proper mounting positions.

SCROLL COMPRESSORS

The Multi Split condensing units use scroll compressors. The 024 unit has one compressor, and the 048 unit has 2 compressors which are stacked vertically (using a sheet metal stand to support the top compressor). In the event of a compressor failure, remove and replace the compressor(s) as follows:

1. Attach refrigerant hose to vapor return line service valve of the circuit related to the defective compressor.
2. Recover refrigerant using accepted techniques.
3. Remove discharge and suction piping from compressor by un-sweating. Pass either nitrogen or another inert gas through the compressor.
4. Remove compressor-mounting bolts. Use a swivel socket to remove the bolt in the rear.
5. Carefully pull compressor stand and piping away from the compressor to remove the compressor.
6. Reverse Steps 1-5 to install the new compressor.

Time-Delay Device Override

The time delay device can be overridden for easier unit servicing by temporarily shorting the time delay device override connector (P9) located in the control box. The short MUST be removed before the time delay device timer can be cleared.

System Status LED's and Fault Codes

In normal operating mode, the green LED located on the outdoor unit microprocessor board will flash on and off at a rate of once per second. Whenever a fan coils unit, compressor, or outdoor fan is energized, a red LED designated for each fan coil unit will be illuminated. If there is an error condition, a code will be displayed using the green and red system status LED's. The green LED will blink its code first, followed by the red LED. The LED's will flash at a rate of once every 2 seconds, with a 2-second pause between the last red LED flash and the first green LED flash of the next code. See Trouble Shooting & Fault Code Section #27

HIGH-PRESSURE RELIEF VALVE

Valve is located in compressor. Relief valve opens at a pressure differential of approximately 450 +/- 50 psig between suction (low side) and discharge (high side) to allow pressure equalization.

INTERNAL CURRENT AND TEMPERATURE SENSITIVE OVERLOAD

Control resets automatically when internal compressor motor temperature drops to a safe level (overloads may require up to 45 minutes to reset). When an internal overload is suspected of being open, check by using an ohmmeter or continuity tester.

HIGH-PRESSURE SWITCH

This switch, located on discharge line, protects against high discharge pressures caused by such events as overcharge, condenser-fan motor failure, system restriction, etc. It opens on pressure rise at about 426 psig. If system pressures go above this setting during abnormal conditions, the switch opens.

WARNING: DO NOT attempt to simulate these system abnormalities - high pressures pose a serious safety hazard.

High-pressure switch is checked with an ohmmeter. If system pressure is below approximately 320 psig, switch shows continuity. The high-pressure switch will reset automatically after CLO (compressor lockout switch) has been reset and time-delay device has completed its timing cycle.

NOTE: If pressure switch needs to be replaced, there is a Schrader valve located under the switch so that system will not need to be evacuated.

(MORE)

LOW-PRESSURE SWITCH

This switch, mounted on the vapor return line, has fixed non-adjustable settings. To check pressure switch, attach pressure gage to vapor return line service valve gage port. Slowly close liquid shutoff valve and allow compressor to pump down. Do not allow compressor to pump down below 2 psig. Compressor should shut down when suction pressure drops to about 7 psig, and should restart when pressure builds up to about 22 psig after CLO has been reset and time-delay device has completed its timing cycle.

NOTE: If pressure switch needs to be replaced, there is a Schrader valve located under the switch so that system will not need to be evacuated.

SERVICE VALVES

The service valves in the outdoor unit are front seated at the factory. This means the refrigerant charge is isolated from the line-set connection ports. To prevent damage to the valve, use a wet cloth or other accepted heat sink material on the valve before brazing. The service valves must be back seated (turned counter-clockwise until seated) before the service port caps are removed and the hoses of gage manifold connected. In this position, refrigerant has access from and through outdoor and indoor unit. The service valve cannot be field repaired; only a complete valve or valve stem seal and service port caps are available for replacement.

NOTE: Do not open service valves, which are not connected to a tubing set. Be sure any inactive circuits are capped off.

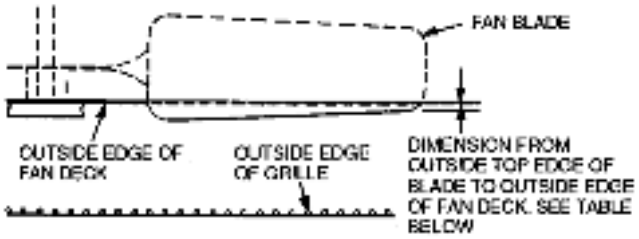

UNIT SIZE — In. (mm)	
538S 024	538S 048
.70 (18)	.16 (4)

Fig. 13 — Condenser-Fan Mounting Positions

SERVICE – 538JNX

WARNING: Before performing recommended maintenance, be sure unit main power switch is turned off. Failure to do so may result in electrical shock or injury from rotating fan blade.

OUTDOOR FAN

A reinforced wire mount holds the outdoor fan assembly in position. See Fig. 8 for proper mounting positions.

HIGH-PRESSURE RELIEF VALVE

Valve is located in compressor. Relief valve opens at a pressure differential of approximately 450 +/- 50 psig between suction (low side) and discharge (high side) to allow pressure equalization.

INTERNAL CURRENT AND TEMPERATURE SENSITIVE OVERLOAD

Control resets automatically when internal compressor motor temperature drops to a safe level (overloads may require up to 45 minutes to reset). When an internal overload is suspected of being open, check by using an ohmmeter or continuity tester.

PUMPDOWN PROCEDURE

The system may be pumped down in order to make repairs on low side without losing complete refrigerant charge.

1. Attach pressure gage to suction service valve gage port.
2. Front seat the liquid line valve.

CAUTION: The outdoor unit holds only the factory designated amount of refrigerant. Additional refrigerant may cause units to relieve pressure through compressor internal pressure relief valve (indicated by a sudden rise of suction pressure) before suction pressure reaches 5 psig. If this occurs, shut off unit immediately, front seat the vapor valve, and remove and recover excess refrigerant following accepted practices.

3. Back seat valve, start unit, and run until suction pressure reaches 5 psig.
4. Shut unit off and front seat suction valve.
5. De-pressurize low side of unit and recover refrigerant following accepted practices.

FILTER DRIER (If Installed)

Whenever the accessory, field-installed moisture liquid indicator (if installed) shows presence of moisture, replace the filter drier. If no indicator is installed, replace the filter drier whenever system has been opened for service or maintenance.

WARNING: DO NOT attempt to simulate system abnormalities. High pressures pose a serious safety hazard.

LOW-PRESSURE

This switch is mounted on the vapor line and has fixed, non-adjustable settings To check pressure switch, attach pressure gage to service valve gage port. Slowly close shutoff valve and allow compressor to pump down. Do not allow compressor to pump down below 2 psig. Compressor should shut down when pressure drops to cutout pressure as shown in Physical Data Section #8, and should restart when pressure builds up to cut-in pressure shown, after CLO (compressor lockout switch) has been reset and accessory Time Guard device has completed its timing cycle.

NOTE: If pressure switch needs to be replaced, there is a Schrader valve located under the switch so that system will not need to be evacuated.

SERVICE VALVES

The service valves in the outdoor unit come from the factory front seated. This means the refrigerant charge is isolated from the line-set connection ports. To prevent damage to the valve, use a wet cloth or other accepted heat sink material on the valve before brazing. The service valves must be back seated (turned counter-clockwise until seated) before the service port caps can be removed and the hoses of gage manifold connected. In this position, refrigerant has access from and through outdoor and indoor unit. The service valve cannot be field repaired; therefore, only a complete valve or valve stem seal and service port caps are available for replacement.

SERVICE – 38CG, CS, SB, & SC

WARNING: Before performing recommended maintenance, be sure unit main power switch is turned off. Failure to do so may result in electrical shock or injury from rotating fan blade.

OUTDOOR FAN
A reinforced mount holds the outdoor fan assembly in position.

HIGH-PRESSURE/LOW PRESSURE
High and low pressure are monitered by the micro processor. There are no servicable relief valves. If the unit goes off on pressure see trouble shooting Section #27

INTERNAL CURRENT AND TEMPERATURE SENSITIVE OVERLOAD
Control resets automatically when internal compressor motor temperature drops to a safe level (overloads may require up to 45 minutes to reset). When an internal overload is suspected of being open, check by using an ohmmeter or continuity tester.

PUMPDOWN PROCEDURE
The system may be pumped down in order to make repairs on low side without losing complete refrigerant charge.
1. Attach pressure gage to suction service valve gage port.
2. Front seat the liquid line valve.

CAUTION: The outdoor unit holds only the factory designated amount of refrigerant. Additional refrigerant may cause units to relieve pressure through compressor internal pressure relief valve (indicated by a sudden rise of suction pressure) before suction pressure reaches 5 psig. If this occurs, shut off unit immediately, front seat the vapor valve, and remove and recover excess refrigerant following accepted practices.

3. Back seat valve, start unit, and run until suction pressure reaches 5 psig.
4. Shut unit off and front seat suction valve.
5. De-pressurize low side of unit and recover refrigerant following accepted practices.

FILTER DRIER (If Installed)
Whenever the accessory, field-installed moisture liquid indicator (if installed) shows presence of moisture, replace the filter drier. If no indicator is installed, replace the filter drier whenever system has been opened for service or maintenance.

WARNING: DO NOT attempt to simulate system abnormalities. High pressures pose a serious safety hazard.

SERVICE VALVES
The service valves in the outdoor unit come from the factory front seated. This means the refrigerant charge is isolated from the line-set connection ports. To prevent damage to the valve, use a wet cloth or other accepted heat sink material on the valve before brazing. The service valves must be back seated (turned counter-clockwise until seated) before the service port caps can be removed and the hoses of gage manifold connected. In this position, refrigerant has access from and through outdoor and indoor unit. The service valve cannot be field repaired; therefore, only a complete valve or valve stem seal and service port caps are available for replacement.

Installation

Start-Up Instructions – Section 24

619E

Check List

START-UP – High Wall Systems

Complete the following checks and the Start-Up checklist before system start-up. Refer to outdoor unit installation, start-up and service instructions for system start-up procedures and refrigerant charging methods.

1. Check condensate drainage system. Add water to check the drainage flow. If water does not flow regularly, check the pipe slope or see if there are any pipe restrictions.
2. Make sure that all wiring connections are correct and tight.
3. Make sure that all barriers, covers, and panels are in place.
4. Ensure that the filters have been installed and that the discharge louvers are correctly positioned.

WARNING: Never operate unit without a filter. Damage to the unit or personal injury may result.

5. If the unit is equipped with a crankcase heater, energize a minimum of 24 hours before starting the unit. To energize crankcase heater only, close indoor unit disconnect, then with the remote controller, set unit in off mode and close the outdoor unit disconnect.
6. Fully backseat (open) the liquid and vapor tube service valves.
7. Unit is shipped with valve stems front seated and caps factory installed. Replace stem caps after system is opened to refrigerant flow (back seated). Replace caps finger tight.
8. With the remote controller, turn on the unit and operate in each mode (as applicable) for 15 minutes to test for proper operation. Do not operate in cooling mode if outdoor temperature is below 55 F or 0° F unless unit is equipped with low ambient control. Do not operate in heating mode (heat pump systems only) if the outdoor temperature is above 75 F.
9. Test for proper refrigerant charge using the superheat method or subcooling method.
10. Explain basic system operation to the owner.

AFTER EXTENDED SHUTDOWNS

If the system has been turned off for more than 12 hours, turn on the indoor and outdoor units disconnect switches to supply power to the system for 12 hours **BEFORE** starting the system.

SEASONAL CHANGEOVERS

When changing heat pump system from cooling to heating or heating to cooling, or before starting cooling only system after it has been out of use for the winter season, perform the following steps **BEFORE** starting the system:

1. Inspect and clean the outdoor unit, particularly the coil.
2. Clean or replace the air filters in the indoor unit.
3. Clean the indoor units drain pan and drainpipe, and re-move any obstructions.
4. Turn on indoor and outdoor unit disconnect switches to supply power to the system 12 hours before starting the system.

TO TURN THE UNIT ON AND OFF

To turn the unit on, press the ON/OFF button on the Remote Control. Unit will start. To stop unit operation, press the ON/OFF button again. Unit will stop. Refer to Owner's Manual enclosed with the fan coil unit or Controls Section #20 for full remote control operating details.

ADJUSTING AIRFLOW

The airflow direction may be adjusted up and down using the remote controller, and from side to side by manually moving the vents. For cooling only units and heat pump units when in the cooling mode, set the louvers to discharge straight out parallel to the floor. For the heat pump units operating in heating mode, it is recommended that the air discharge louvers be set to discharge vertically.

NOTE: The full swing range of the mode selected will automatically be used if auto. fan mode is selected.

OPERATING MODE MEMORY

After the system is turned off or after a power failure, the system remains in the last operating mode selected. When the system is turned back on, or when power is automatically restored, operation continues in the same operating mode as when power shut down.

Installation

Start-Up Instructions – Section 24

619C

Console

Check List

START-UP – Under Ceiling Systems

WARNING: Never operate unit without a filter or with grille removed; damage to the unit or personal injury may result. Make the following checks and complete the Start-Up Checklist before system start-up. Refer to Installation, Start-Up and Service Instructions for system start-up instructions and refrigerant charging methods.

1. Check condensate drainage system:
   a. Remove grille and frame from the unit.
   b. On the opposite side of the drain connection, insert a water bottle up into the fan coil unit and fill drain pan. Water must flow steadily, if not, check the pipe slope or inspect for any pipe restrictions.
2. Make sure that all wiring connections are correct and that they are tight.
3. Check that all barriers, covers, and panels are in place. Ensure that the filters and return-air grilles have been installed and that the discharge louvers are positioned correctly.

AFTER EXTENDED SHUTDOWN

If the system has been turned off for more than 12 hours, turn on the indoor and outdoor units disconnect switches to supply power to the system for 12 hours BEFORE starting the system.

SEASONAL CHANGEOVERS

When changing heat pump system from cooling to heating or heating to cooling, or before starting cooling only system after it has been out of use for the winter season, perform the following steps BEFORE starting the system:

1. Inspect and clean the outdoor unit, particularly the coil.
2. Clean or replace the air filters in the indoor unit.
3. Clean the indoor units drain pan and drainpipe, and remove any obstructions.
4. Turn on indoor and outdoor unit disconnect switches to supply power to the system 12 hours before starting the system.

ADJUSTING AIRFLOW

Automatic Air Sweep

All units are equipped with an automatic air sweep feature, which automatically directs the airflow louvers up and down to provide optimum room air circulation. If the auto. Sweep feature is not desired, temporarily start the auto. sweep using the remote thermostat (press Air Sweep button). When the louvers are in the desired position, turn the auto. Sweep off (press Air Sweep button again) to hold them in that position.

OPERATING MODE MEMORY

After the system is turned off or after a power failure, the system remains in the last operating mode selected. When the system is turned back on, or when power is automatically restored, operation continues in the same operating mode as when the system shut down.

START-UP – Console Systems

WARNING: Never operate unit without a filter or with grille removed; damage to the unit or personal injury may result. Make the following checks and complete the Start-Up Checklist before system start-up. Refer to Installation, Start-Up and Service Instructions for system start-up instructions and refrigerant charging methods.

1. Check condensate drainage system:
   a. Remove grille and frame from the unit.
   b. On the opposite side of the drain connection, insert a water bottle up into the fan coil unit and fill drain pan. Water must flow steadily, if not, check the pipe slope or inspect for any pipe restrictions.
2. Make sure that all wiring connections are correct and that they are tight.
3. Check that all barriers, covers, and panels are in place. Ensure that the filters and return-air grilles have been installed and that the discharge louvers are positioned correctly.

AFTER EXTENDED SHUTDOWN

If the system has been turned off for more than 12 hours, turn on the indoor and outdoor units disconnect switches to supply power to the system for 12 hours BEFORE starting the system. (Heat Pump Systems)

SEASONAL CHANGEOVERS

When changing heat pump system from cooling to heating or heating to cooling, or before starting cooling only system after it has been out of use for the winter season, perform the following steps BEFORE starting the system:

1. Inspect and clean the outdoor unit, particularly the coil.
2. Clean or replace the air filters in the indoor unit.
3. Clean the indoor units drain pan and drainpipe, and remove any obstructions.
4. Turn on indoor and outdoor unit disconnect switches to supply power to the system 12 hours before starting the system.

ADJUSTING AIRFLOW

Automatic Air Sweep

All units are equipped with an automatic air sweep feature, which automatically directs the airflow louvers up and down to provide optimum room air circulation. If the auto. Sweep feature is not desired, temporarily start the auto. sweep using the remote control. When the louvers are in the desired position, turn the auto. Sweep off (press Air Sweep button again) to hold them in that position.

OPERATING MODE MEMORY

After the system is turned off or after a power failure, the system remains in the last operating mode selected. When the system is turned back on, or when power is automatically restored, operation continues in the same operating mode as when the system shut down.

Installation

Start-Up Instructions – Section 24

619F

Check List

START-UP - Cassette Units

Make the following checks and complete the Start-Up Checklist before system start-up. Refer to outdoor unit Installation, Start-Up, and Service manual for system start-up instructions and refrigerant charging methods. Be sure to use the system refrigerant charge shown in Section #4 or #14 or on the outdoor unit nameplate.

1. Check condensate drainage system.
   a. Remove grille(s) and frame from the unit.
   b. On the opposite side of the drain connection, insert a water bottle up into the fan coil unit and fill drain pan. Water must flow regularly with condensate pump energized. If water does not, check the pipe slope or see if there is any pipe restrictions.

NOTE: The unit is equipped with a safety float switch to de-energize the compressor if the drain water level gets too high.

2. Make sure that all wiring connections are correct and that they are tight.
3. Make sure that all barriers, covers, and panels are in place.
4. Ensure that the filters and return air grilles have been installed and that the discharge louvers are correctly positioned.

WARNING: Never operate unit without a filter or with grille(s) removed. Damage to the unit or personal in jury may result.

Installation

Start-Up Instructions – Section 24

538 A

538 B

538 J

538 S

Check List

START-UP - Multi-Split

LEAK TEST
Field piping and all tubing connections must be leak tested by the pressure method. Use R-22 at approximately 25 psig backed up with an inert gas to reach a total system pressure not to exceed 245 psig.

EVACUATE AND DEHYDRATE
Field piping and fan coil must be evacuated and dehydrated to 1,000 microns using accepted practices.

WARNING: Service valves must be fully back seated to close service port. There is no Schrader valve at the service port, and failure to back seat the valve could result in loss of system charge or personal injury.

CHARGE SYSTEM
Release charge into system by opening (back seating) vapor supply and vapor return line service valves. Open ONLY those service valve sets, which have fan coil unit sections connected to them. DO NOT open valves where no field tubing has been connected.

PRELIMINARY CHECKS
Complete Start-Up Checklist and the following checks prior to starting up unit.

1. Check condensate drainage system. To do this, add a small amount of water into each fan coil unit condensate pan, and ensure that each pan drains freely. Inspect drain pans and lines, and clean as required.
2. Make sure that all wiring connections are correct and tight.
3. Check all barriers, covers, and panels to ensure they are in place.
4. Identify which fan coil unit valve sets have been connected.

IMPORTANT: DO NOT open valves that do not have fan coil units connected to them.

5. Unit is shipped with the valve stems front seated and caps factory installed. Remove caps from all valves to which fan coil units have been connected. Replace caps and tighten until finger tight.
6. Fully back seat (open) the vapor supply and vapor return tube service valves.
7. Turn on main disconnects to indoor fan coil units and outdoor condensing unit.
8. Using the controller for each indoor fan coil unit, turn on each fan coil unit and operate each unit in each mode (i.e., electric heat [if provided], and fan cooling) for 15 minutes to test for proper operation.
9. Test for proper refrigerant charge in each circuit using the subcooling method.

START-UP – 538A, 538B & 538J

NOTE: All outdoor units with a reciprocating compressor have a crankcase heater. Heater should be energized for a minimum of 12 hours prior to unit start-up.

LEAK TEST
Field piping and all tubing connections must be leak tested by the pressure method. Use R-22 at approximately 25 psig backed up with an inert gas to reach a total system pressure not to exceed 245 psig.

EVACUATE AND DEHYDRATE
Field piping and fan coil must be evacuated and dehydrated to 1000 microns.

WARNING: Service valves must be fully back seated to close service port. There is no Schrader valve at the service port, and failure to backseat the valve could result in loss of system charge or personal injury.

CHARGE SYSTEM
Release charge into system by opening (back seating) vapor supply and vapor return line service valves.

PRELIMINARY CHECKS
Complete Start-Up Checklist and the following checks prior to starting up unit.
1. Check condensate drainage system. To do this, add a small amount of water into the fan coil units condensate pan, and ensure that the pan drains freely. Inspect pan and lines, and clean as required.
2. Make sure that all wiring connections are correct and tight.
3. Check all barriers, covers, and panels to ensure they are in place.
4. Unit is shipped with the valve stems front seated and caps factory installed. Remove caps from all valves to which a fan coil unit has been connected. Replace caps and tighten until finger tight.
5. Fully backseat (open) the vapor and liquid tube service valves.
6. Turn on main disconnects to indoor fan coil and outdoor units.
7. Turn on the fan coil unit and operate it in each mode (i.e., electric heat [if provided] and fan cooling) for 15 minutes to test for proper operation. Use the fan coil remote controller if unit is so equipped.
8. Test for proper refrigerant charge using the subcooling method.

TO START UNIT
NOTE: When using outdoor unit in conjunction with 619C, 619E or 619E fan coil, refer to start-up instructions included with fan coil for correct start-up procedures. Be sure that crankcase heater (if so equipped) has been on for 12 hours and that field disconnect is closed. Set room thermostat below ambient temperature. Operate unit for 15 minutes, and then check system refrigerant charge. See Charge Verification Section #19. Unit compressor starts after a 5-minute delay if equipped with accessory Time Guard® II device.

START-UP CHECKLIST

Outdoor Unit: Model Number _____ Serial Number _____

Indoor Unit: Model Number _____ Serial Number _____

PRE-START-UP (For One or More Systems)

Outdoor Unit

IS THERE ANY SHIPPING DAMAGE? (Y/N) _____
IF SO, WHERE? _____
WILL THIS DAMAGE PREVENT UNIT START-UP? (Y/N) _____
CHECK POWER SUPPLY. DOES IT AGREE WITH UNIT DATAPLATE? (Y/N) _____
HAS THE GROUND WIRE BEEN CONNECTED? (Y/N) _____
HAS THE CIRCUIT PROTECTION BEEN SIZED AND INSTALLED PROPERLY? (Y/N) _____
ARE THE POWER WIRES TO THE UNIT SIZED AND INSTALLED PROPERLY? (Y/N) _____
ARE ALL TERMINALS TIGHT? (Y/N) _____
IS COOLING PISTON INSTALLED, THE CORRECT SIZE, & IN THE CORRECT DIRECTION ? (Y/N) _____
IS HEATING PISTON INSTALLED, THE CORRECT SIZE, & IN THE CORRECT DIRECTION ? (Y/N) _____

Piping

ARE REFRIGERANT LINES CONNECTED TO SERVICE VALVE SETS? (Y/N) _____
ARE CONTROL POWER LINES CONNECTED TO CONTROL POWER TERMINAL BLOCK? (Y/N) _____
ARE THERMISTOR CABLES CONNECTED TO CORRECT THERMISTOR PLUGS? (Y/N) _____
ARE THERMISTOR CABLES SEATED? (Y/N) _____
ARE TERMINALS SNUG IN THE HOUSINGS ? (Y/N) _____
ARE SERVICE VALVES OPENED AND BACKSEATED? (Y/N) _____
ARE STEM VALVES INSTALLED AND SNUG? (Y/N) _____
HAVE ALL REFRIGERANT CONNECTIONS AND PIPING JOINTS BEEN CHECKED FOR LEAKS? (Y/N) _____

Indoor Fan Coil Unit

Piping

CHECK TO BE SURE ACCURATER DEVICE IS INSTALLED IN FAN COIL UNIT. _____
HAVE REFRIGERANT CONNECTIONS BEEN CHECKED FOR LEAKS? (Y/N) _____
IS CONDENSATE LINE CONNECTED? (Y/N) _____
DOES CONDENSATE LINE DRAIN FREELY? (Y/N) _____
IF ACCESSORY CONDENSATE PUMP IS INSTALLED, IS MAXIMUM LIFT OF PUMP LESS THAN 20 INCHES? (Y/N) _____
IF ACCESSORY CONDENSATE PUMP IS INSTALLED, DOES PUMP START AND RUN ACCORDING TO CONTROLS SPECIFICATION? (Y/N) _____

Controls

ARE CONTROL POWER LINES AND THERMISTOR CABLES ROUTED SEPARATELY (NOT IN SAME CONDUIT AND NOT IN SAME MULTI-CONDUCTOR CABLE)? (Y/N) _____
ARE CONTROL WIRES AND THERMISTOR CABLES CONNECTED TO THE SAME CIRCUIT AS ASSOCIATED REFRIGERANT LINES? (Y/N) _____

Units with Wired Remote Controller

CHECK CONNECTIONS OF CABLE LEADS AT SUBBASE. THEY SHOULD BE AS FOLLOWS:

TERMINAL	COLOR
1	Red
2	Black
3	Brown
4	Orange
5	White

CHECK ROUTING OF LEADS WITHIN SUBBASE; ARE THERE PINCHED OR CUT LEADS? (Y/N) _____

CHECK MOUNTING OF SUBBASE TO WALL, IS IT TIGHT (DO NOT APPLY EXCESSIVE FORCE TO MOUNTING SCREW)? (Y/N) _____

Units with Wireless Remote Controller

CHECK MOUNTING OF INTERFACE BOARD; ARE STANDOFFS USED (TO MAINTAIN FIXED SEPARATION ABOVE SHEET METAL CHASSIS)? (Y/N) _____

CHECK CONNECTION OF POWER SUPPLY PLUG (2-CIRCUIT MOLEX PLUG) ON INTERFACE BOARD; IS THE BLUE LEAD CONNECTED TO PIN 1? (Y/N) _____

ARE FRESH BATTERIES INSTALLED PROPERLY IN THE FAN COIL UNIT REMOTE CONTROLLER (PER DIAGRAM IN CONTROLLER)? (Y/N) _____

DOES THE REMOTE CONTROLLER BACKLIGHT ILLUMINATE WHEN THE BUTTON ON THE BACK OF THE REMOTE CONTROLLER IS PRESSED? (Y/N) _____

Fan System

DOES THE FAN ROTATE FREELY? (Y/N) _____

ARE AIR FILTERS IN PLACE? (Y/N) _____

Power Supply

DOES THE POWER SUPPLY MATCH THE FAN COIL UNIT DATA PLATE? (Y/N)

IS GROUND WIRE CONNECTED? (Y/N) _____

START-UP

A. Check Indoor Fan Operation

Under Ceiling Fan Coil Units

SELECT FAN MODE, THEN INITIATE TEST SEQUENCE. DOES THE FAN COIL UNIT START AT LOW SPEED, THEN SHIFT TO MEDIUM SPEED, AND THEN SHIFT TO HIGH SPEED? (Y/N) _____

Cassette Fan Coil Units

POSITION SELECTOR SWITCH AT SUBBASE IN EACH FAN SPEED SETTING IN SEQUENCE. DOES THE FAN COIL UNIT CHANGE SPEEDS PER SWITCH SETTING? (Y/N) _____

B. Start System Operation at the Fan Coil Unit

SELECT COOLING MODE AND ADJUST SET POINT TO BE BELOW CURRENT ROOM TEMPERATURE. OBSERVE OPERATION OF OUTDOOR CONDENSING UNIT:

DOES COMPRESSOR START (AFTER INITIAL TIME DELAY) AND RUN? (Y/N) _____

DOES OUTDOOR FAN RUN OR CYCLE ACCORDING TO SPACE REQUIREMENTS? (Y/N) _____

DE-SELECT COOLING MODE AT INDOOR FAN COIL UNIT, AND RECORD ALL INFORMATION BELOW:

AFTER AT LEAST 15 MINUTES RUNNING TIME, RECORD THE MEASUREMENTS BELOW. FOR MULTIPLE SYSTEMS, REPEAT THIS PROCEDURE FOR EACH SYSTEM.

	SYSTEM A	SYSTEM B
COMPRESSOR AMPS (L1/L2)	_____	_____
OIL PRESSURE	_____	_____
VAPOR LINE PRESSURE	_____	_____
VAPOR LINE TEMP	_____	_____
DISCHARGE PRESSURE	_____	_____
DISCHARGE LINE TEMP	_____	_____
ENTERING OUTDOOR-AIR TEMP	_____	_____
LEAVING OUTDOOR-AIR TEMP	_____	_____

	FAN COIL UNIT
INDOOR ENTERING-AIR dB (dry bulb) TEMP	_____
INDOOR ENTERING-AIR WB (wet bulb) TEMP	_____
INDOOR LEAVING-AIR dB TEMP	_____
INDOOR LEAVING-AIR WB TEMP	_____
VAPOR SUPPLY LINE TEMPERATURE	_____
(AT VAPOR SUPPLY LINE SOLENOID VALVE COIL)	_____

(MORE)

Maintenance/Repair

Cleaning & Maintenance – Section 26

619E

619E CLEANING AND MAINTENANCE

⚠ CAUTION

To avoid the possibility of electric shock, before performing any cleaning and maintenance operations always turn off power to the system by pressing the orange ON/OFF button on the remote controller. Turn off the outdoor disconnect switch located near the outdoor unit. If the indoor unit is on a separate switch, be sure it is also disconnected.

For proper system operation, perform the cleaning and maintenance operations in Table 9.

Lubrication — The indoor-fan automatic air sweep motor, and the outdoor-fan motor are factory lubricated and require no oiling.

To Install or Replace Remote Controller Batteries

⚠ CAUTION

Do not drop the remote controller — damage to the device may result. Avoid getting the controller wet.

NOTE: Before replacing the batteries, note that the remote controller signal can be affected if electronic fluorescent lights are installed nearby. The batteries may not need to be replaced. If you suspect this is the problem, consult your Carrier distributor.

Batteries should be replaced once a year. Use 2 batteries (1.5 v, dc-type, AAA alkaline batteries). Never use old or recharged batteries together with new ones.

To replace batteries:

1. Slide the battery cover off from the back of the remote controller. See Fig. 18.
2. Insert the 2 batteries in accordance with the markings on the remote controller, so that the poles are correct (+ and −).
3. Press the RST button using an instrument screwdriver or similar small, pointed tool.
4. Replace the cover securely.

It is time to replace the remote controller batteries when the remote controller function becomes irregular, or the system no longer responds to commands given close to the unit.

When shutting down the system for an extended period of time, it is advisable to *remove* the batteries.

Consult distributor if any other equipment is turned on or shows signs of disrupted operation if you use the wireless remote controller, or if the system is turned on or shows signs of disrupted operation when the remote controller of any other equipment is used.

To Set the Current Time

1. Press the TA button (located on the back of the remote controller; see Fig. 19) with an instrument screwdriver or similar small, pointed tool, and the current time indication symbol flashes.

   Note that the controller comes preset from the factory set for 6:00 a.m.
2. Set the current time with the hour and minute buttons on the front of the remote controller (see Fig. 19) while the current time indication is flashing. Note that a.m. and p.m. are also indicated as the times are scrolled through.
3. Press TA again. The flashing will stop and the current time will be reset to the new setting.

To Remove and Clean or Replace Air Filters

⚠ CAUTION

Operating your system with dirty air filters may damage the indoor unit and can also cause reduced cooling performance, intermittent system operation, frost build-up on the indoor coil, and blown fuses. Inspect and clean or replace the air filters **monthly.**

TO REMOVE AIR FILTERS:

1. Open fan coil unit front panel (lift). See Fig. 20.
2. Pull the filters down to remove.

TO CLEAN OR REPLACE FILTERS — Filters should be vacuumed and washed with warm water (see Fig. 20). Shake filter to remove any excess water, dry thoroughly, and replace by sliding filter behind front grille until filter snaps in place.

If the filter has begun to break down or is torn, it needs to be replaced. Replacement filters are available through your Carrier distributor.

NOTE: DO NOT put filters in the dishwasher.

Table 9 — Cleaning and Maintenance Schedule

TASK	MONTHLY	QUARTERLY	YEARLY
INDOOR UNIT			
Clean Air Filters	X		
Clean Drain Pipe		X	
Clean Condensate Drain Pan			X
Replace Batteries in the Remote Controller			X
Clean Indoor Unit Front Panel		X	
OUTDOOR UNIT			
Clean the Fins From Outside		X	
Open the Unit and Clean Fins Inside			X
Remove Dust From Electrical Parts			X
Check Electrical Connections are Tight			X
Clean Outdoor Fan			X
Check that Outdoor Fan Assembly is Tight			X
Clean Drain Pan		X	

(MORE)

To Clean Indoor Unit Front Panel — If the front panel of the unit becomes dirty or smudged, wipe the outside of the front panel with a soft dry cloth. If necessary, use a mild liquid detergent and wipe off carefully with a dry cloth.

⚠ CAUTION

When cleaning the front panel, NEVER use water hotter than 105 F, and DO NOT pour water into the fan coil unit. Do not use abrasive or petroleum based cleaners — damage to unit appearance will result.

To Clean Indoor Coil — To clean the coil, remove indoor unit front panel, and vacuum the coil fins. Use care not to bend or damage fins.

To Clean Outdoor Coil (Outdoor Unit)

⚠ WARNING

Some metal parts and sharp fins of outdoor unit coil can cause personal injury during cleaning. Clean coil carefully.

To clean the outdoor coil:

1. Remove any dirt or obstruction from discharge opening.
2. Use garden hose to spray water on the coil. Debris that collects between coil fins inhibits heat transfer — direct the water spray between coil fins to flush out debris.

To Clean Condensate Drains — Clean all drains and drain pans at the start of each cooling season. Check the flow by pouring water into the drain.

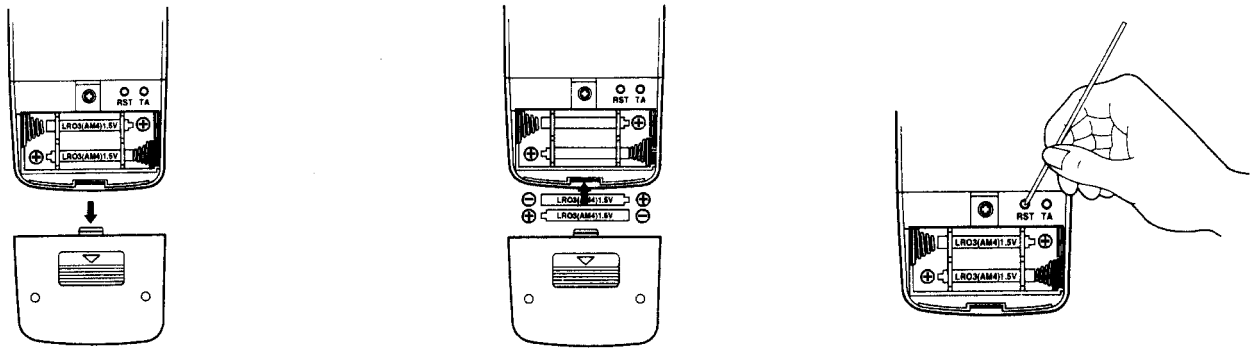

REMOVE COVER — INSERT NEW BATTERIES — PRESS RST

NOTE: Be sure to insert new batteries correctly (as shown).

Fig. 18 — Installing or Replacing Batteries

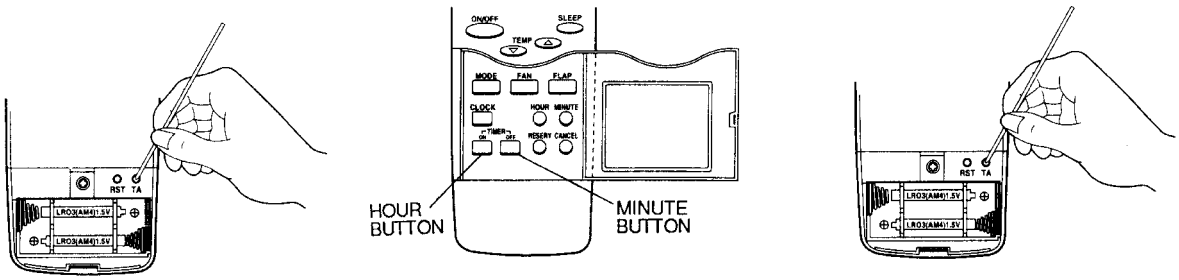

PRESS TA — SET TIME — PRESS TA

Fig. 19 — Setting the Current Time

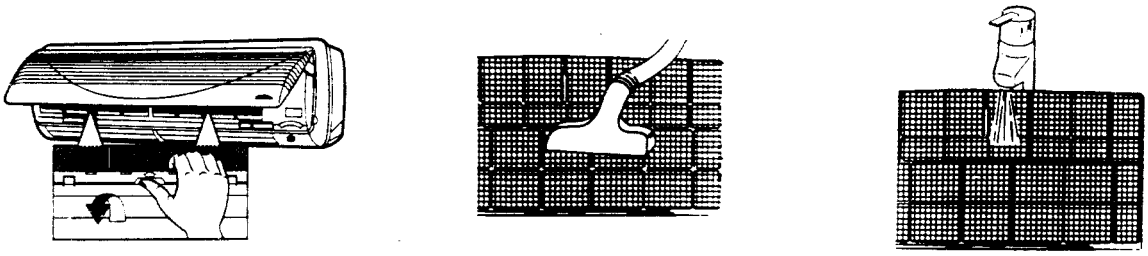

REMOVE FILTER — VACUUM CLEAN — RINSE WITH WATER

Fig. 20 — Air Filter Maintenance

Maintenance/Repair

Cleaning & Maintenance – Section 26

619C

Console - Indoor

619C CLEANING AND MAINTENANCE

⚠ CAUTION

To avoid the possibility of electric shock, before performing any cleaning and maintenance operations, always turn off power to the system by pressing the mode button on the remote thermostat until the display shows ‘‘OFF,’’ and turning off the outdoor disconnect switch located near the outdoor unit. If the indoor unit is on a separate switch, be sure to turn this disconnect off as well.

⚠ CAUTION

Do not wash filter in water over 120 F (to avoid shrinkage). Do not expose filter to fire (to avoid fire damage). Do not expose filter to direct sunlight. Clean filter more frequently when air is extremely dirty.

⚠ CAUTION

Do not attempt to clean or service components in control box.

For proper system operation, perform the cleaning and maintenance operations in Table 8.

Lubrication — The indoor-fan, automatic air sweep, and the outdoor-fan motors are factory lubricated and require no oiling.

To Remove and Clean or Replace Air Filters (Fig. 23)

⚠ CAUTION

Operating your system with dirty air filters may damage the indoor unit and, in addition, can cause reduced cooling performance, intermittent system operation, frost build-up on the indoor coil, and blown fuses. Inspect and clean or replace the air filters *monthly*.

TO REMOVE AIR FILTERS — Remove filters by pulling them straight out.

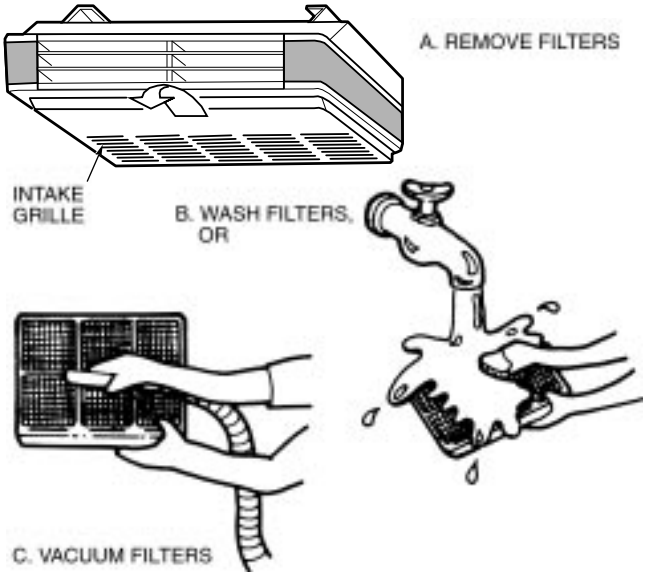

Fig. 23 — Cleaning Filters

(MORE)

Table 8 – Cleaning and Maintenance Schedule

TASK	MONTHLY	QUARTERLY	YEARLY
INDOOR UNIT			
Clean Air Filters	X		
Clean Drain Pipe		X	
Clean Condensate Drain Pan			X
Clean Indoor Coil			X
Clean Indoor Unit Front Panel		X	
OUTDOOR UNIT			
Clean the Fins From Outside		X	
Open the Unit and Clean Fins Inside			X
Remove Dust From Electrical Parts			X
Check Electrical Connections are Tight			X
Clean Outdoor Fan			X
Clean Outdoor Coil			X
Check that Outdoor Fan Assembly is Tight			X
Clean Drain Pan		X	

NOTE: Maintenance procedures for the outdoor units are in the 38HDC, HDS, and QRC installation instructions.

TO CLEAN OR REPLACE FILTERS – Filters can be vacuumed or washed in warm water. Shake filter to remove any excess water, and replace by sliding filter behind grille until filter snaps in place.

If the filter has begun to break down or is torn, replace it. Replacement filters are available through your Carrier distributor.

To Clean Indoor Unit Bottom Panel – If the bottom panel of the unit becomes dirty or smudged, wipe the outside of the panel with a soft dry cloth. Use a mild liquid detergent and wipe off carefully with a dry cloth.

To Clean Indoor Coil – To clean the coil, remove indoor unit bottom panel and vacuum the coil fins, using care not to bend or damage fins.

To Clean Outdoor Coil (Outdoor Unit)

⚠ WARNING

Some metal parts and sharp fins of outdoor unit coil can cause personal injury during cleaning. Clean coil carefully.

To clean the outdoor coil:

1. Remove any dirt or obstruction from discharge opening.
2. Use a garden hose to spray water on the coil. Debris that collects between coil fins inhibits heat transfer – direct the water spray between coil fins to flush out debris.

To Clean Condensate Drains – Clean all drains and drain pans at the start of each cooling season. Check the flow by pouring water into the drain.

TO CLEAN OR REPLACE DRAIN PAN

1. Place a plastic sheet on the floor to catch any water that may spill from drain pan.
2. Remove the intake grille and distribution assembly (attached). See Fig. 23.
3. Remove the condensate water in the drain pan by letting water drain into a 3-gallon bucket.

⚠ CAUTION

Do not use a screwdriver to pry drain pan out of assembly – it could damage the pan.

4. Remove the 4 screws holding the drain pan.
5. Carefully hold the drain pan to remove it from the assembly.

CONSOLE CARE AND MAINTENANCE

Step 1 – Maintenance (Outdoor Unit)

WARNING

Before performing recommended maintenance, be sure unit main power switch is turned off. Failure to do so may result in electric shock or injury from rotating fan blade.

CLEANING COILS

Coil should be washed out with water or blown out with compressed air. Clean coil annually or as required by location and outdoor air conditions. Inspect coil monthly and clean as required. Fins are not continuous through coil sections. Dirt and debris may pass through first section, become trapped between the row of fins, and restrict outdoor unit airflow. Use a flashlight to determine if dirt or debris has collected between coil sections.

Clean coil as follows:

1. Turn off unit power.
2. Using a garden hose or other suitable equipment, flush coil from the outside to remove dirt. Be sure to flush all dirt and debris from drain holes in base of unit. Fan motors are waterproof.

Step 2 – Maintenance (Indoor Unit)

CAUTION

To avoid the possibility of electric shock, before performing any cleaning and maintenance operations, always turn off power to the system by pressing the mode button on the remote control unit until the display shows "OFF," and turn off the separate disconnect switch located near the unit. If the indoor unit is on a separate switch, be sure to turn this disconnect off as well.

CAUTION

Do not wash filter in water over 120°F (to avoid shrinkage). Do not expose filter to fire (to avoid fire damage). Do not expose filter to direct sunlight. Clean filter more frequently when air is extremely dirty.

CAUTION

Do not attempt to clean or service components in control box.

LUBRICATION

The indoor-fan, automatic air sweep, and the outdoor-fan motors are factory lubricated and require no oiling.

TO REMOVE AND CLEAN OR REPLACE AIR FILTERS

CAUTION

Operating your system with dirty air filters may damage the indoor unit and, in addition, can cause reduced performance, intermittent system operation, frost build up on the indoor coil, and blown fuses. Inspect and clean or replace the air filters monthly.

<u>To Remove Air Filters</u>
Remove filters by pulling them straight out.

<u>To Clean Or Replace Filters</u>
Filters can be vacuumed or washed in warm water. Shake filter to remove any excess water, and replace by sliding filter behind grille until filter snaps in place. If the filter has begun to break down or is torn, replace it. Replacement filters are available through your Carrier distributor.

<u>To Clean Indoor Unit Bottom/Front Panel</u>
If the bottom/front panel of the unit becomes dirty or smudged, wipe the outside of the panel with a soft dry cloth. Use a mild liquid detergent and wipe off carefully with a dry cloth.

<u>To Clean Indoor Coil</u>
To clean the coil, remove indoor unit bottom/front panel and vacuum the coil fins, using care not to bend or damage fins.

<u>To Clean Condensate Drains</u>
Clean all drains and drain pans at the start of each cooling season. Check the flow by pouring water into the drain.

<u>To Clean Or Replace Drain Pan</u>

1. Place a plastic sheet on the floor to catch any water that may spill from the drain pan.
2. Remove the intake grille and distribution assembly.
3. Remove the condensate water in the drain pan by letting water drain into a 3-gallon bucket.

Maintenance/Repair

Cleaning & Maintenance – Section 26

619F

619F SERVICE AND MAINTENANCE

Remove unit grille, filter, and condensate pan for cleaning, lubricating, or replacing parts.

⚠ WARNING

To avoid personal injury or damage to unit, do not service until all power sources are shut down, locked out, and tagged out. Failure to do so could result in personal injury or unit damage.

Minimum Maintenance

1. Check, clean, or replace air filter each month or as required.
2. Check cooling coil, drain pan, condensate trap, and condensate drain pan each cooling season for cleanliness. Clean as necessary.
3. Check fan motor and wheel for cleanliness each heating and cooling season.
4. Check electrical connections for tightness and controls for proper operation each heating and cooling season. Service as necessary.

Servicing

TO CLEAN OR REPLACE RETURN AIR FILTERS

1. Open intake grille by turning screws as shown in Fig. 18.
2. Slide filter out.
3. Vacuum clean or wash filter with soapy water. Rinse and let air dry. If filter needs replacing, filters are available from the local dealer.

⚠ CAUTION

If air filter is not replaced in the unit, dust and dirt gather in air conditioner and operation becomes impaired.

TO CLEAN OR REPLACE DRAIN PAN

1. Place a plastic sheet on the floor to catch any water that may spill from drain pan.
2. Remove the air intake and distribution assembly. Remove the condensate water in the drain pan by pulling out the rubber drain plug (Fig. 19) and letting water drain into a 3-gallon bucket.

⚠ CAUTION

Do not use a screw driver to pry drain pan out of assembly. It could damage the pan.

3. Remove screws holding the drain pan. On size 024, there are 4 screws, and on sizes 036 and 048 there are 6 screws. Carefully hold the drain pan to remove it from the assembly.
4. Re-install the drain pan using the appropriate number of screws. Center and align the metal fan inlet orifice (Fig. 19) with the fan. Ensure the fan spins freely.

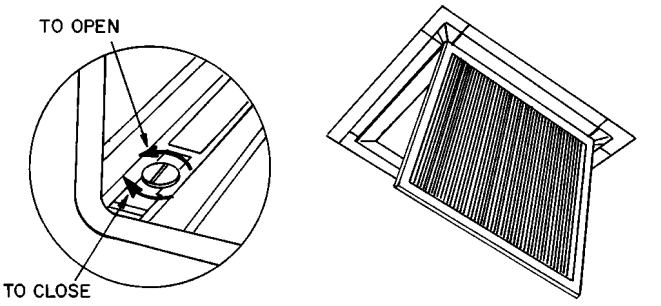

Fig. 18 – Intake Grille Slotted Screws

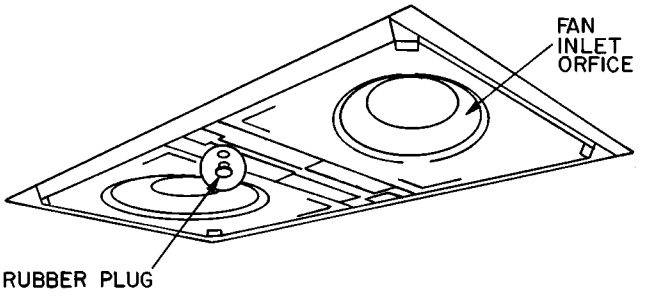

Fig. 19 – Drain Plug

INSTALLATION OPTIONS

Maintenance/Repair

Cleaning & Maintenance – Section 26

538 A

538 B

538 J

Console - Outdoor

538 S

538A, 538B, 538J MAINTENANCE

WARNING

Before performing recommended maintenance, be sure unit main power switch is turned off. Failure to do so may result in electric shock or injury from rotating fan blade.

I. LUBRICATION

A. Fan-Motor Bearings

Oiling hole are provided at each end of outdoor-fan motor. Remove fan motor and lubricate motor with 32 drops (16 drops per hole) of SAE-10 (Society of Automotive Engineers) non-detergent oil at intervals described below:

- Annually, when environment is very dirty, ambient temperature is higher than 105°F, and average unit operating time exceeds 15 hours a day, or
- Every 3 years when environment is reasonably clean, ambient temperature is less than 105°F, and unit operating time averages 8 to 15 hours a day, or
- Every 5 years when environment is clean, ambient temperature is less than 105° F, and unit operating time averages less than 8 hours a day.

B. Compressor

Compressor contains factory oil charge; replace oil when lost. See Table 7 for recommended compressor oils.

II. CLEANING COILS

Coil should be washed out with water or blown out with compressed air. Note that the blow-thru design causes dirt and debris to build up inside of the coils.

Clean coil annually or as required by location and outdoor air conditions. Inspect coil monthly and clean as required. Fins are not continuous through coil sections. Dirt and debris may pass through first section, become trapped between the row of fins, and restrict outdoor unit airflow. Use a flashlight to determine if dirt or debris has collected between coil sections. Clean coil as follows:

1. Turn off unit power.
2. Using a garden hose or other suitable equipment, flush coil from the outside to remove dirt. Be sure to flush all dirt and debris from drain holes in base of unit. Fan motors are waterproof.

Table 7 – Recommended Compressor Oils

RECOMMENDED OIL	UNIT 38HDC/HDL/QR						
	018 (All)	024 (All)	030 (All)	036 (Single Phase)	036 (3 Phase)	048 (All)	060 (all)
3GS	●	●			●	●	●
Calumet RO-15					●	●	●
Cryol 150A	●	●					
Sontex 200LT			●	●			
Zerol 150TD	●						
Zerol 300		●					

CONSOLE CARE AND MAINTENANCE

Step 1 – Maintenance (Outdoor Unit)

WARNING

Before performing recommended maintenance, be sure unit main power switch is turned off. Failure to do so may result in electric shock or injury from rotating fan blade.

CLEANING COILS

Coil should be washed out with water or blown out with compressed air. Clean coil annually or as required by location and outdoor air conditions. Inspect coil monthly and clean as required. Fins are not continuous through coil sections. Dirt and debris may pass through first section, become trapped between the row of fins, and restrict outdoor unit airflow. Use a flashlight to determine if dirt or debris has collected between coil sections.

Clean coil as follows:

1. Turn off unit power.
2. Using a garden hose or other suitable equipment, flush coil from the outside to remove dirt. Be sure to flush all dirt and debris from drain holes in base of unit. Fan motors are waterproof.

Step 2 – Maintenance (Indoor Unit)

CAUTION

To avoid the possibility of electric shock, before performing any cleaning and maintenance operations, always turn off power to the system by pressing the mode button on the remote control unit until the display shows "OFF," and turn off the separate disconnect switch located near the unit. If the indoor unit is on a separate switch, be sure to turn this disconnect off as well.

CAUTION

Do not wash filter in water over 120°F (to avoid shrinkage). Do not expose filter to fire (to avoid fire damage). Do not expose filter to direct sunlight. Clean filter more frequently when air is extremely dirty.

CAUTION

Do not attempt to clean or service components in control box.

LUBRICATION

The indoor-fan, automatic air sweep, and the outdoor-fan motors are factory lubricated and require no oiling.

TO REMOVE AND CLEAN OR REPLACE AIR FILTERS

CAUTION

Operating your system with dirty air filters may damage the indoor unit and, in addition, can cause reduced performance, intermittent system operation, frost build up on the indoor coil, and blown fuses. Inspect and clean or replace the air filters monthly.

<u>To Remove Air Filters</u>
Remove filters by pulling them straight out.

<u>To Clean Or Replace Filters</u>
Filters can be vacuumed or washed in warm water. Shake filter to remove any excess water, and replace by sliding filter behind grille until filter snaps in place. If the filter has begun to break down or is torn, replace it. Replacement filters are available through your Carrier distributor.

<u>To Clean Indoor Unit Bottom/Front Panel</u>
If the bottom/front panel of the unit becomes dirty or smudged, wipe the outside of the panel with a soft dry cloth. Use a mild liquid detergent and wipe off carefully with a dry cloth.

<u>To Clean Indoor Coil</u>
To clean the coil, remove indoor unit bottom/front panel and vacuum the coil fins, using care not to bend or damage fins.

<u>To Clean Condensate Drains</u>
Clean all drains and drain pans at the start of each cooling season. Check the flow by pouring water into the drain.

<u>To Clean Or Replace Drain Pan</u>

1. Place a plastic sheet on the floor to catch any water that may spill from the drain pan.
2. Remove the intake grille and distribution assembly.
3. Remove the condensate water in the drain pan by letting water drain into a 3-gallon bucket.

538 S MAINTENANCE

WARNING

Before performing recommended maintenance, be sure unit main power switch is turned off. Failure to do so may result in electric shock or injury from rotating fan blade.

I. LUBRICATION

A. Fan-Motor Bearings

Oiling hole are provided at each end of outdoor-fan motor. Remove fan motor and lubricate motor with 32 drops (16 drops per hole) of SAE-10 (Society of Automotive Engineers) non-detergent oil at intervals described below:

- Annually, when environment is very dirty, ambient temperature is higher than 105°F, and average unit operating time exceeds 15 hours a day, or
- Every 3 years when environment is reasonably clean, ambient temperature is less than 105°F, and unit operating time averages 8 to 15 hours a day, or
- Every 5 years when environment is clean, ambient temperature is less than 105° F, and unit operating time averages less than 8 hours a day.

B. Compressor

Compressor contains factory oil charge; replace oil when lost. See Table 7 for recommended compressor oils.

II. CLEANING COILS

Coil should be washed out with water or blown out with compressed air. Note that the blow-thru design causes dirt and debris to build up inside of the coils.

Clean coil annually or as required by location and outdoor air conditions. Inspect coil monthly and clean as required. Fins are not continuous through coil sections. Dirt and debris may pass through first section, become trapped between the row of fins, and restrict outdoor unit airflow. Use a flashlight to determine if dirt or debris has collected between coil sections. Clean coil as follows:

1. Turn off unit power.
2. Using a garden hose or other suitable equipment, flush coil from the outside to remove dirt. Be sure to flush all dirt and debris from drain holes in base of unit. Fan motors are waterproof.

Maintenance/Repair

Troubleshooting & Fault Codes – Section 27

619E – Troubleshooting

619E - Fault Codes

Troubleshooting

Failure	Check/Action
Fan coil doesn't receive signal from remote. No BEEP heard from fan coil. Unit runs in TEST mode.	• Check plug connection at receiver board and main board(CN12) • Check remote for signal transmission indicator • Operate remote directly in front of unit Replace batteries Remote failure – if available try another remote - replace Receiver board failure - replace
Unit BEEPS continuously	Replace main PCB
System does not operate in Test, Emergency or Remote mode. Green power light is not on and LED on main circuit board is not blinking.	• Check power supply to indoor fan coil and main circuit board • Check fuse on main circuit board If there is power to the main board and LED is not blinking replace main board.
Indoor fan coil operating but outdoor unit does not.	• Check power supply • Check control wiring at indoor and outdoor TB for relay signal output If there is no signal at indoor TB replace main circuit board. If there is a signal at outdoor TB check compressor contactor.
Indoor fan motor noise	• Check blower assembly for being out of balance. • Check fan motor bearings and wheel bearings for damage. Realign blower wheels if apparent source of noise. Replace parts as required.
Air sweep not working or movement is radical.	• Check wiring connection of motor to main circuit board (CN14 for 9 & 12, CN13 & CN14 for 18 & 24 size units. If connection is secure replace appropriate step motor.
115V units not starting up on initial installation.	• Check power source to insure lines are in phase. Make correction if power lines are out of phase.
Steady flashing of green light with no fault code indication	• Check plug connections on main circuit board
Fan coil does not power up	• Check wiring connections and power supply • Check for voltage at fan coil TB • Check fuse if LED on main board is not flashing • Check plug connection at CN1(main board)

	• Check CN1 plug for voltage If voltage is recorded at the CN1 plug and LED does not flash, replace board.
Insufficient cooling, Insufficient Heating (Heat Pump)	• Check for blocked air filter – clean filter • Outdoor unit obstructed – remove obstruction • Check temperature setting – use remote to change temperature • Fan speed too low – change fan speed • Check operation mode – Change to cooling mode • Check for open windows and doors
Error code 6 (reversing valve malfunction) for cooling only systems	• Check indoor thermistor • Check refrigerant charge • Check FJ1 switch on main circuit board (s/b off)
Unit stops during operation	• Off timer is operating • Room temperature has reached set point

High Wall Diagnostic Codes

Error Code Flashes *	Error	Check/Action
2	**Room Air thermistor malfunction** If system reads thermistor value: Short condition: greater or = 194 deg F Open condition: less or = -40 deg F	Check plug connection on main circuit board (CN9). Check resistance of thermistor: Short: Resistance less than 1.0 ohm Open: Resistance is infinity If out of range replace thermistor.
3	**Indoor Coil thermistor malfunction** If the following occurs with thermistor: Short condition: greater or = 194 deg F Open condition: less or = -40 deg F	Check plug connection on main circuit board (CN9). Check resistance of thermistor: Short: Resistance less than 1.0 ohm Open: Resistance is infinity If out of range replace thermistor.
4	**Outdoor Coil thermistor malfunction** If the following occurs with thermistor: Short condition: greater or = 194 deg F Open condition: less or = -40 deg F	Check plug connection on main circuit board (CN17). Check termistor cable connection at terminal board on indoor and outdoor unit. Check resistance of thermistor: Short: Resistance less than 1.0 ohm Open: Resistance is infinity If out of range replace thermistor.
5 Applicable for 00 9 & 012 units only	**Compressor Drive malfunction** Indoor coil thermistor needs to change 3.5F within 5 min after start of compressor.	Check control wiring connections between indoor and outdoor units. Control voltage for 009 & 012 is line voltage. Check indoor coil thermistor for proper placement Check for refrigerant leaks. Check OHM on compressor winding , OLP, capacitor Winding Resistance ohms (cold comp @ 70f ±2%): 38AN009-100 & 38BK009-110 SC= 5.140, RC= 0.767 38AN012-300 & 38BK012-300 SC= 5.630, RC= 2.170 38AN012-310 & 38BK012-310 SC = 4.780, RC= 2.240 Check indoor and outdoor terminal block for power supplied from indoor relay (y-cooling, 3-heat pump). Check compressor contactor.
6 Applicable for 009 & 012 only 009 & 012 energize in heating 18 & 24 energize in cooling	**Reversing Valve malfunction** After 5 minutes of operation, indoor coil temperature changes by 3.5F in opposite direction of mode selected.	Check control wiring connections between indoor and outdoor units. The control voltage for 009 & 012 is line voltage. Check voltage at TB of indoor unit: 12: check between 1 & L2 – 230V 9: check between 1 & N – 115V If no voltage replace **Relay** board. Continue if voltage measured. Check voltage at TB of outdoor unit. Check Voltage at reversing valve. Replace reversing valve if not energized.

7	**Outdoor Air thermistor malfunction** If the following occurs with thermistor: Short condition: greater or = 194 deg F Open condition: less or = -40 deg F	Check plug connection on main circuit board (CN17). Check termistor cable connection at terminal board on indoor and outdoor unit. Check resistance of thermistor: Short: Resistance less than 1.0 ohm Open: Resistance is infinity If out of range replace thermistor.
8	**Indoor Fan failure** System senses continuous abnormal indoor fan RPM operation.	Check plug connection CN3 (power supply). Check plug connection CN4 (RPM detection) Check plug connection CN8 (motor capacitor). Set unit in fan mode only. Check power supply at CN3 (pin 1 & 5): 009 : 50 ~ 114Vrms 012, 018 & 024 : 100 ~ 200Vrms If no voltage measured replace board. If voltage recorded replace motor

* Green LED on Front Grille

Maintenance/Repair

Troubleshooting & Fault Codes – Section 27

- 619C – Troubleshooting
- Thermostat – see Controls
- Console – Troubleshooting (for Remote, see Controls)

TROUBLESHOOTING

If the under-ceiling fan coil unit fails to start or operate properly, sometimes the problem is minor and can be handled without a service call. Refer to Table 9 for some common problems, causes, and typical solutions. See Fig. 25 and 26 for additional system troubleshooting details. If the problem cannot be corrected, contact your local Carrier representative for further assistance.

Table 9 – Troubleshooting

PROBLEM	CAUSE	TYPICAL SOLUTION
System does not start.	**Blown fuse or circuit breaker tripped at building power entry.**	**Replace fuse or reset circuit breaker.***
	Indoor and/or outdoor unit disconnect switch is off.	**Turn on disconnect switch(es).**
	Thermostat is set to night mode.	Cancel mode using Day/Night button on thermostat.
	Power failure.	Restore power.
	Unit is in off mode.	Press Mode button on thermostat until thermostat displays the desired unit mode.
	Compressor three-minute timer is running.	Wait for 3 minutes.
	Temperature is above or below the selected temperature.	Select new temperature using the thermostat.
System does not cool properly.	Air filter(s) in indoor unit is dirty or needs to be replaced.	Clean or replace air filter(s).
	Temperature is set too high or too low.	Reset temperature to desired comfort setting using the thermostat.
	Outdoor unit outdoor coil restricted.	Remove obstruction.
	Fan speed is set too low.	Adjust fan speed to high or auto. using the Fan button on the thermostat.
System does not heat properly.	Air filter(s) in indoor unit is dirty or needs to be replaced.	Clean or replace air filter(s).
	Temperature is set too high or too low.	Reset temperature to desired comfort setting using the thermostat.
	Outdoor unit outdoor coil restricted.	Remove obstruction.
	Fan speed is set too low.	Adjust fan speed to high or auto. using the Fan button on the thermostat
	Outdoor unit outdoor coil is frosted up.	Check manual defrost timer setting and adjust as necessary.
Ice or frost has formed on indoor coil.[2]	Low outdoor-air temperature.	Run system in fan-only mode until frost is gone.
	Air filter(s) in indoor unit is dirty or needs to be replaced.	Clean or replace air filter(s).
Insufficient air¯ow	Air filter(s) in indoor unit is dirty or needs to be replaced.	Clean or replace air filter(s).
	Fan coil unit coil is blocked.	Clean air discharge louvers.

*If fuse blows or circuit breaker trips again after first start attempt, DO NOT attempt to start system again. Contact your local Carrier representative for assistance.

[2]When outdoor temperature is approximately 55 F or below, indoor coil frosting may occur when system is operated in cooling or maximum dehumidification mode.

FAULT CODES

Table 6 – Indicator Lamps Troubleshooting

LAMP STATUS	INDICATION	CORRECTIVE ACTION
POWER flashes 10 seconds after A/C start-up (with or without other signal lamps)	Communication problem	• Check connection between indoor (TAC-440) and outdoor (TAC-420) units (for TAC-400, ANC) • Check connection between TAC-444 and TAC-460 (for TAC-404)
POWER, COMPRES, and PRESSURE lamps flash.	Thermistor failure	• Check TH-1 for correct resistance • Check for proper connection between TH-1 and TAC-444 • Replace TH-1 if necessary
POWER, COMPRES, and IMPEDANCE lamps flash	Thermistor failure	• CHECK TH-2 for correct resistance • Check for proper connection between TH-2 and TAC-444 • Replace TH-2 if necessary
POWER lamp flashes and PRESSURE is lit, AIR CON is Off	Low Pressure	• Check if the filters are clean • Check TH-1 and TH-2 for correct resistance • Check cooling system for normal operation
POWER AND PRESSURE lamps flash, AIR CON is Off	High Pressure	• In Heat mode: Check if the evaporator is blocked (Check if filters are clean) • Check TH-2 (in Heating mode) or TH-3 (in Cool mode) for correct resistance • Check cooling system for normal operation
FILTER is lit	Filter cleaning	• Clean all filters
POWER, IMPEDANCE lamps flash, COMPRES is lit	Low voltage	• Check power supply voltage • Check electrical connections • Replace TAC-444
POWER lamp flashes, IMPEDANCE and COMPRES lamps lit, AIR CON lamp flashes after A/C startup	Voltage failure at startup	• Check power supply voltage • Check electrical connections • Replace TAC-444
POWER lamp flashes, IMPEDANCE and COMPRES are lit before A/C startup	High voltage	• Check power supply voltage • Check electrical connections • Replace TAC-444
POWER lamp flashes, IMPEDANCE and COMPRES are lit, AIR CON is lit after A/C startup	High voltage during compressor operation	• Check power supply voltage • Check electrical connections • Replace TAC-444

TROUBLESHOOTING

Table 7 – General Troubleshooting Chart (Page 1 of 2; Go to Page 2)

SYMPTOM	PROBABLE CAUSE	CORRECTIVE ACTION
A/C fails to start.	a. Power supply to unit not connected (POWER LED Off).	Check for proper connection of power at disconnect.
	b. Fuse Blown (POWER LED Off).	Reset automatic circuit breaker or replace line fuse.
	c. On/SEND has not been pressed.	Press On/SEND button on Remote Control, or use the AUTO 3-position slide switch for automatic constant 22°C Set Point (when Remote Control is not available).
	d. Indoor unit does not receive transmitted commands.	Make sure that nothing is blocking the Remote Control transmission to the A/C display.
	e. AUTO-OFF-REMOTE switch is set to Off.	Slide the 3-position switch on the Display to REMOTE (RMOT) position.
Only indoor fan ventilator works, although cooling or heating is desired.	a. The selected mode is on Fan Only, or on Cool when heating is desired.	Check if the Remote Control is on the desired mode. If not, select the correct mode (refer to your User manual). Also note that each 15 minutes (max), the compressor will be switched on for 3 minutes (at least).
	b. Temperature is set to a value which is too high (in Cool mode.)	Observe the temperature setting on the Remote Control. Also note that each 15 minutes (max), the compressor will be switched on for 3 minutes (at least).
Only indoor fan motor and compressor working. Outdoor fan motor stopped.	a. In Heat Mode: Indoor fan motor blocked.	Remove obstruction.
	b. In Cool mode: System runs while evaporator Anti-ice routine take place.	Wait up to 90 seconds until Anti-ice routine is completed.
In Cool mode: High pressure, or; In Heat mode: Outdoor coil freeze	a. Run capacitor of outdoor fan motor is burnt.	Replace outdoor fan motor run capacitor.
	b. Winding of outdoor fan motor is shorted.	Replace outdoor fan motor.
Only indoor fan motor and outdoor fan motor are working. No cooling and/or heating taking place.	a. Overload safety device on compressor is cut out due to high temperature.	Switch Off power and try again after one hour.
	b. Compressor run capacitor is burnt.	Replace compressor run capacitor.
	c. Compressor winding shorted.	Replace compressor.
No air supply at indoor unit (compressor operates).	a. Indoor fan motor is blocked or turns slowly.	1. Check voltage. Repair writing if necessary.
		2. Check indoor fan wheel if tight on motor shaft. Tighten if necessary.
	b. Indoor fan motor capacitor is burnt.	Replace indoor fan motor capacitor.
	c. Indoor fan motor winding is burnt.	Replace indoor fan motor.
	d. In Heat mode: Delayed start for indoor fan motor.	Normal software delay (max. 20 sec)
	e. Clogged air filters.	Clean filters.
Low Capacity.	a. Lack of refrigerant (will be accompanied by whistling noise): Causes ice formation on the evaporator coil (in Cool mode).	Unit must be charged (according to the nameplate) after localizing the gas leak.
	b. Clogged air filters.	Clean filters.
In Heat mode: only compressor runs, outdoor and indoor fan motors are stopped. AIR CON indicator flashes.	A/C operates in De-Icing cycle.	Wait (max.) 10 minutes until the A/C resumes normal operation.

Note: Check for broken wires and loose cable lugs first!

WARNING: Always unplug the A/C before performing cleaning or maintenance activities.

Table 7 – General Troubleshooting Chart (Page 2 of 2; Return to Page 1)

SYMPTOM	PROBABLE CAUSE	CORRECTIVE ACTION
Water accumulates and overflows from evaporator drain pan.	Drain pan pipe or hose is clogged or the spout of drain pan is clogged.	Disassemble plastic drain-pipe from spout of evaporator drain pan. Flush with clean water.
Water dripping from the condenser base (in Heat mode).	Water drain outlet or the spout is clogged.	Open condenser cover, clean out water outlet, clean the base inside thoroughly.
Unit does not operate in desired mode.	a. The 3-position slide switch on the A/C display is in AUTO or OFF position.	Change the slider position to REMOTE (RMOT).
	b. Faulty Remote Control settings.	1. If Remote Control symbols respond to the commands correctly, check the A/C ID Code (Standard or Alternative). Refer to "Changing A/C ID Code" and to Remote Control DIP switch 3 setting.
		2. If Cool commands are OK, but Heat symbol is skipped on LCD, refer to Remote Control DIP switch 7 setting.
		3. Replace Remote Control.
	c. Remote Control low battery.	Replace Remote Control batteries.
	d. IR detector.	Try shorter distance between Remote Control and A/C. If no response, replace IR detector.
The A/C is interfered by other Remote Control or our Remote Control interfering other instruments.	Common IR Code.	Modify the Remote Control IR transmission code. Refer to "Changing A/C ID Code" and to Remote Control DIP switch 3 setting.
In Cool mode: the unit (compressor) does not start.	a. Faulty TH-3 (outdoor) sensor.	Replace the TH-3 sensor.
	b. Faulty TH-3 Extension Cable (between indoor and outdoor).	Replace TH-3 Extension Cable.

Note: Check for broken wires and loose cable lugs first!

WARNING: Always unplug the A/C before performing cleaning or maintenance activities.

Maintenance/Repair

Troubleshooting & Fault Codes – Section 27

619F – Troubleshooting

Thermostat – see Controls

Trouble Shooting – Cassette

If any of the original wire furnished must be replaced, it must be replaced with type 90 deg C or its equivalent.

Wire in accordance with National Electric Code (NEC) and any local codes.

Transformer is thermally protected and will reset automatically.

Indoor fan motors have internal thermal protection.

The Compressor Lockout switch will lock out the compressor to prevent short cycling on the compressor overloads and safety devices. Before replacing the Compressor Lockout check the other devices. Minimum one amp turn required to hold contacts closed.

Heating contactor energizes electric heater in fan coil. Heater requires separate power source for electrical power.

A jumper wire must be installed between the Y1 and O terminals on the terminal board to activate the condensate pump. If the jumper is not installed the float switch will keep the unit from operating.

Maintenance/Repair

Troubleshooting & Fault Codes – Section 27

538A – Troubleshooting

538S – Troubleshooting

538S – Fault Codes

538B – Troubleshooting, Cooling Cycle

538B – Troubleshooting, Heating Cycle

Console

TROUBLESHOOTING CHART — COOLING CYCLE

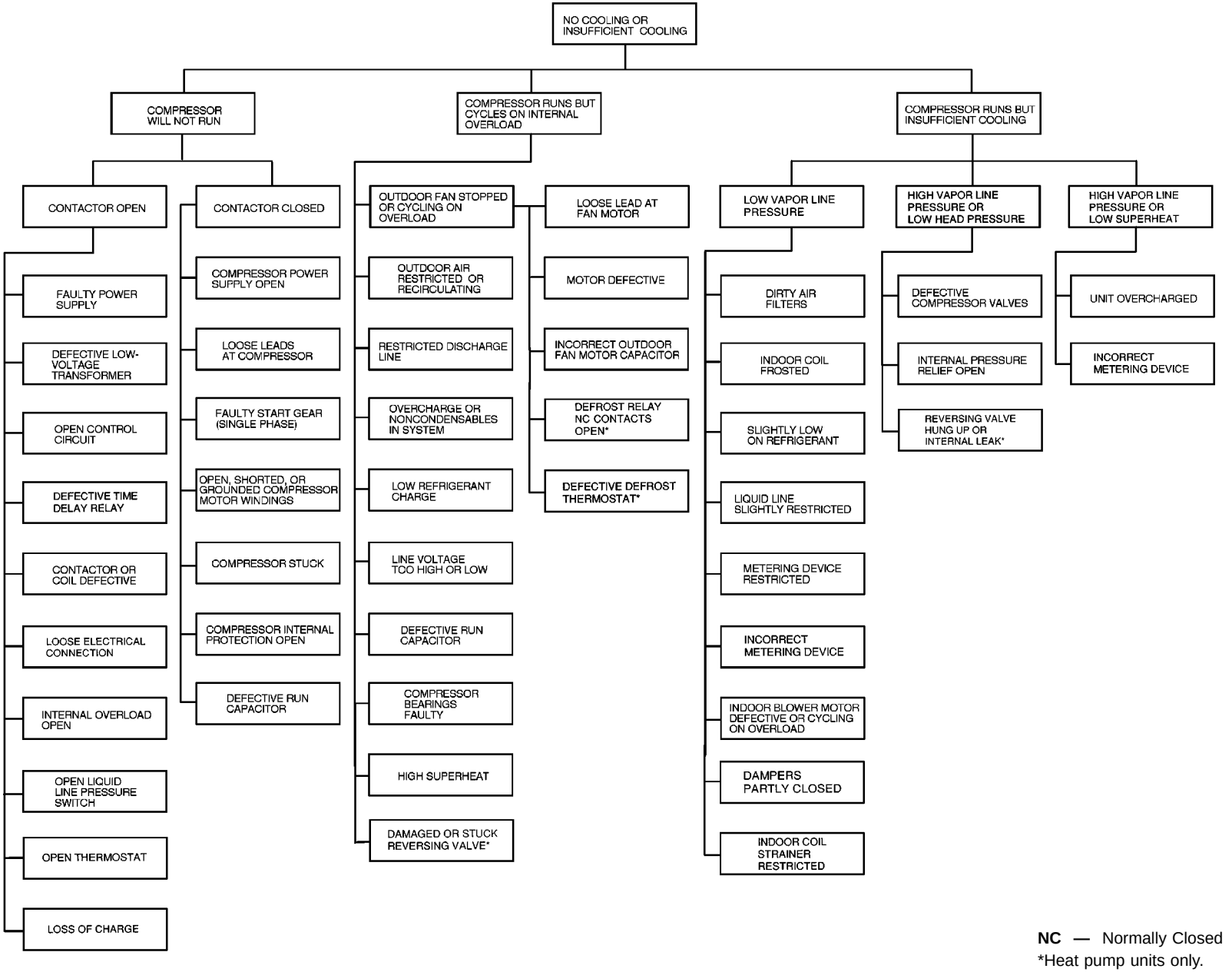

NC — Normally Closed
*Heat pump units only.

TROUBLESHOOTING CHART

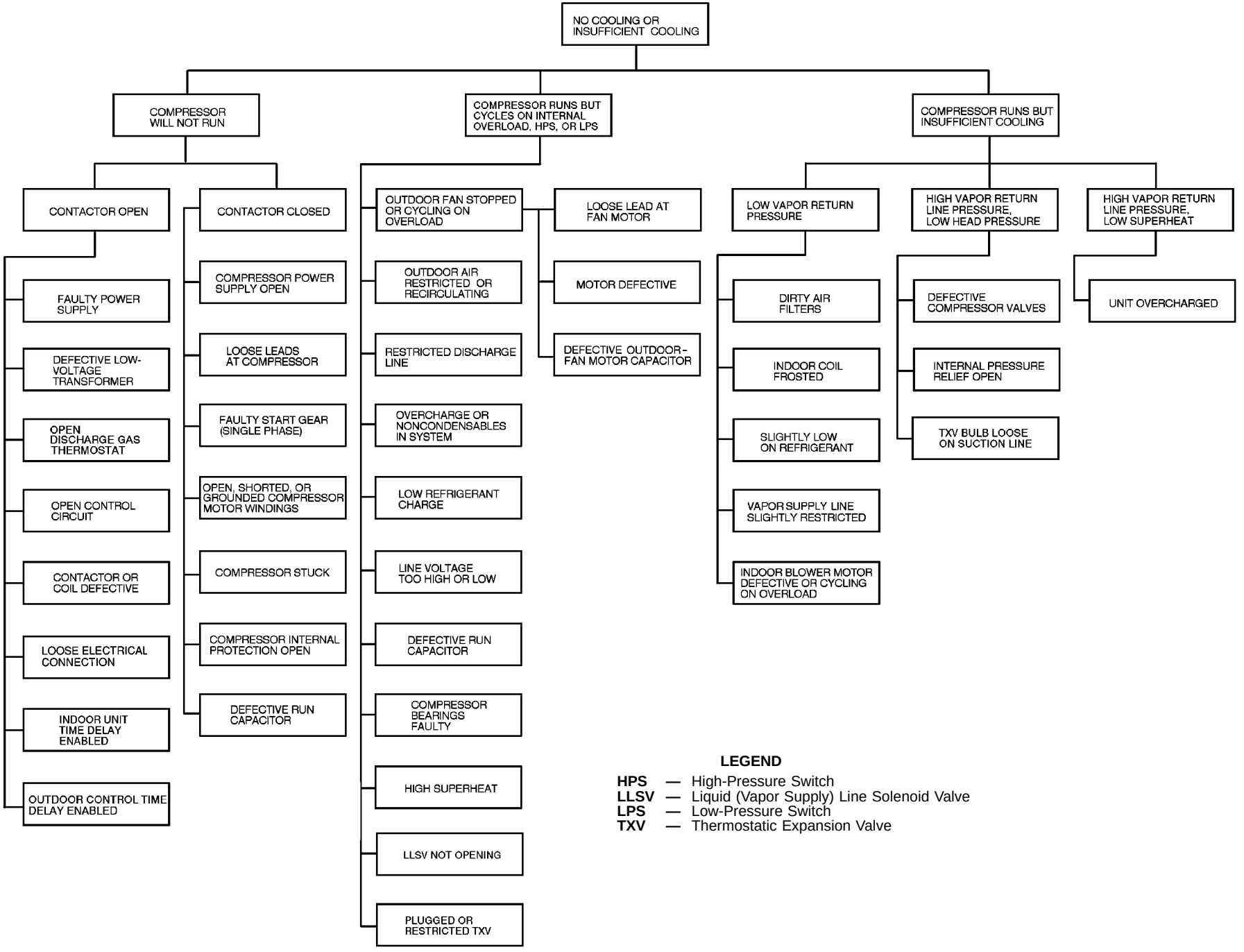

LEGEND

HPS — High-Pressure Switch
LLSV — Liquid (Vapor Supply) Line Solenoid Valve
LPS — Low-Pressure Switch
TXV — Thermostatic Expansion Valve

TROUBLESHOOTING CHART — HEATING CYCLE
(Heat Pump Units Only)

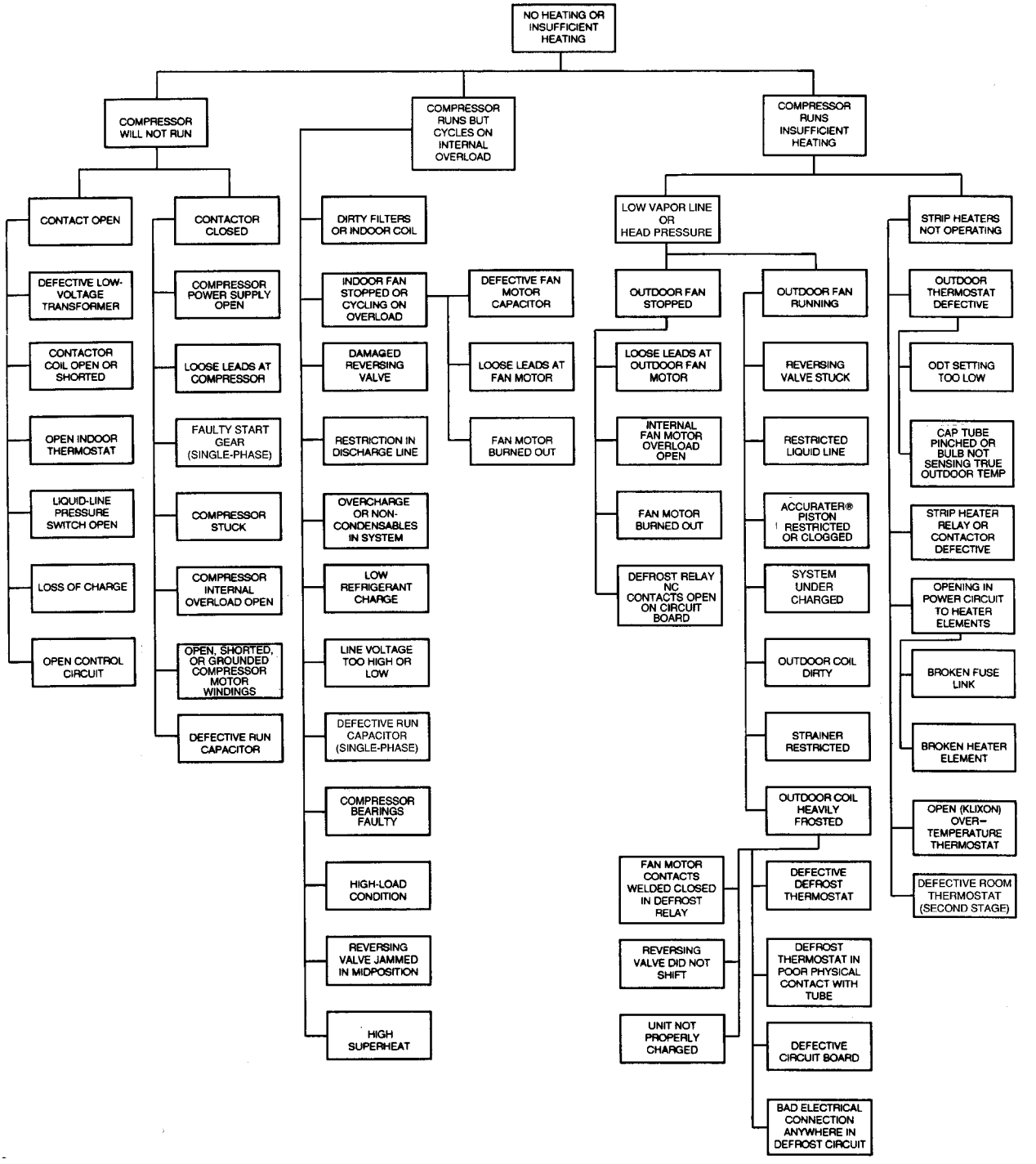

LEGEND

CAP — Capillary
NC — Normally Closed
ODT — Outdoor Thermostat
TEMP — Temperature

Fault Code System Status 538S

Greeen LED		Red LED		Unit Status
Number of Flashes On	Number of Flashes Off	Number of Flashes On	Number of Flashes Off	
		–	Always	System Ready
1	1	1	1	Low Head Pressure Circuit #1
		2	2	High Head Pressure Circuit #1
		3	3	Low Head Pressure Circuit #2
2	2	1	1	High Head Pressure Circuit #2
		2	2	Low Outdoor Ambient Temperature - Outdoor Thermistor
		3	3	High Outdoor Ambient Temperature - Outdoor Thermistor
3	3	1	1	Hardware Error
		2	2	Time Guard Device Active Circuit #1
		3	3	Time Guard Device Active Circuit #2