G9MXT

Product Specifications

Up to 96% AFUE, Two–Stage ECM Gas Furnace

EASIER TO SELL

- Up to 96% AFUE in upflow and horizontal positions 95% AFUE in downflow position
- California NOx approved
- Most models have earned the ENERGY STAR®
- Two–stage heating operation
- Xtra SEER ECM blower motor
- Supports single– and two–stage cooling units
- Approved for Twinning applications (0601412 through 1202422)
- Dehumidification feature in cooling
- Electronic air cleaner terminal
- Cabinet air leakage less than 2.0% at 1.0 in. W.C. and cabinet air leakage less than 1.4% at 0.5 in. W.C. when tested in accordance with ASHRAE standard 193

TOUGHER

- Flame roll–out sensors standard
- Adjustable heating blower OFF delay
- Factory set blower ON delay
- Stainless steel secondary heat exchanger
- High temperature limit control prevents overheating
- Direct ignition with Silicon Nitride ignitor
- High–quality, corrosion–resistant, one–piece steel cabinet

QUIETER

- Operates quieter at lower heating rates
- Two–speed induced draft combustion blower
- Fully Insulated steel cabinet

EASIER TO INSTALL AND SERVICE

- Direct vent (2–pipe), single–pipe venting or ventilated combustion air
- 24 VAC humidifier terminal
- 35” (889mm) high, for ease of installation
- Innovative knobs for easy door removal and secure attachment
- Factory shipped for natural gas, with propane gas conversion kits available
- Four position – upflow/downflow/horizontal (left/right) installation
- At least twelve different venting configurations
- Through the casing flue pipe for counterflow or horizontal applications with accessory (order separately)
- Concentric vent available
- Self diagnostics with super bright LED
- Slide out heat exchanger assembly and blower assembly

LIMITED WARRANTY *

- 5 year No Hassle Replacement™ limited warranty
- Lifetime heat exchanger limited warranty
- 5 year parts limited warranty
  - With timely registration, an additional 5 year parts limited warranty

* For residential applications only. See warranty certificate for complete details and restrictions, including warranty coverage for other applications.

Illustrations and photographs are only representative.
Some product models may vary.

WARNING

CARBON MONOXIDE POISONING AND FIRE HAZARD
Failure to follow this warning could result in personal injury, death, and/or property damage.
This furnace is not designed for use in recreation vehicles, manufactured (mobile) homes or outdoors.
Failure to follow this warning could result in personal injury, death, and/or property damage.

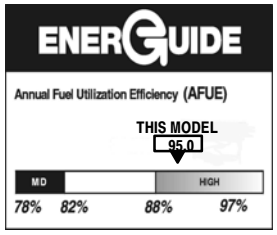

DESIGN CERTIFIED®

ENERGY STAR PARTNER

CERTIFIED®

AHRI CERTIFIED™ www.ahridirectory.org

Use of the AHRI Certified TM Mark indicates a manufacturer’s participation in the program. For verification of certification for individual products, go to www.ahridirectory.org .

Model Number	Input (BTUH)	Efficiency AFUE Upflow/ Hz	Efficiency AFUE Down-flow	ENERGY STAR	Cooling Capacity CFM range @ .5 in. w.c. (125 Pa)	Dimensions H x W x D Inches (Millimeters)	Shipping Wt. Lbs (Kg)
G9MXT0401410A	40,000	96.0%	95.0%	√	385–925	35 x 14-3/16 x 29–1/2 (889 x 361 x 750)	125 (56)
G9MXT0401712A	40,000	96.0%	95.0%	√	330–1085	35 x 17–1/2 x 29–1/2 (889 x 445 x 737)	135 (61)
G9MXT0601412A	60,000	95.0%	95.0%	√	620–1090	35 x 14-3/16 x 29–1/2 (889 x 361 x 750)	136 (62)
G9MXT0601714A	60,000	96.0%	95.0%	√	530–1505	35 x 17–1/2 x 29–1/2 (889 x 445 x 737)	146 (66)
G9MXT0801716A	80,000	96.0%	95.0%	√	920–1610	35 x 17–1/2 x 29–1/2 (889 x 445 x 737)	156 (70)
G9MXT0802120A	80,000	96.0%	95.0%	√	795–2015	35 x 21 x 29–1/2 (889 x 533 x 737)	161 (73)
G9MXT1002120A	100,000	96.0%	95.0%	√	1105–2110	35 x 21 x 29–1/2 (889 x 533 x 737)	171 (77)
G9MXT1202422A	120,000	96.0%	95.0%	√	1215–2055	35 x 24–1/2 x 29–1/2 (889 x 622 x 737)	195 (88)

MODEL NUMBER IDENTIFICATION GUIDE

DIGIT POSITION	1	2	3	4	5	6,7,8	9,10	11,12	13	14
	G	9	M	X	T	060	17	14	A	1

EFFICIENCY
- G = Mainline
- N = Entry
- 9 = 90+% AFUE

POSITION
- M = Multiposition

TYPE
- A = Modulating ECM Variable Speed Blower
- V = ECM Variable Speed
- X = ECM Blower (Speed Select)
- S = Single–stage
- T = Two–stage

FEATURE
- C = Communicating
- E = Extra AFUE Efficiency
- T = Two–Stage

HEAT INPUT
- 040 = 40,000 BTU/hr
- 060 = 60,000 BTU/hr
- 080 = 80,000 BTU/hr
- 100 = 100,000 BTU/hr
- 120 = 120,000 BTU/hr

CABINET WIDTH
- 14 = 14–3/16”
- 17 = 17–1/2”
- 21 = 21”
- 24 = 24–1/2”

NOMINAL MAXIMUM COOLING AIRFLOW @ .5 IN. W.C.
- 08 = 800 CFM
- 10 = 1000 CFM
- 12 = 1200 CFM
- 14 = 1400 CFM
- 16 = 1600 CFM
- 20 = 2000 CFM
- 22 = 2200 CFM

SALES (MAJOR) REVISION DIGIT

ENGINEERING (MINOR) REVISION DIGIT

ECM–Electronically Commutated Motor

ACCESSORIES PART NUMBER IDENTIFICATION GUIDE

DIGIT POSITION	1	2	3	4	5, 6, 7	8, 9	10, 11
	N	A	H	A	001	01	DH

BRANDING
- N = Non–Branded

PRODUCT GROUP
- A = Accessory

KIT USAGE
- H = Heating

MAJOR SERIES
- A = Original
- B = 2nd Generation

Product Identifier Number

Package Quantity

Type of Kit (Example: DH = Draft Hood – Chimney Adapter)

PHYSICAL DATA

UNIT SIZE (NATURAL GAS Ratings)			0401410A	0401712A	0601412A	0601714A	0801716A	0802120A	1002120A	1202422A
Input	High Heat	(BTUH)	40,000	40,000	60,000	60,000	80,000	80,000	100,000	120,000
	Low Heat	(BTUH)	26,000	26,000	39,000	39,000	52,000	52,000	65,000	78,000
Output	High Heat	(BTUH)	39,000	39,000	58,000	58,000	78,000	78,000	97,000	117,000
	Low Heat	(BTUH)	25,000	25,000	38,000	38,000	50,000	51,000	63,000	76,000
Efficiency	Upflow/HZ AFUE % (ICS)		96.0		95.0	96.0				
	Downflow AFUE % (ICS)		95.0							
Certified Temperature Rise Range ºF (ºC)		High Heat	40–70 (22–39)	40–70 (22–39)	35–65 (19–36)	40–70 (22–39)	40–70 (22–39)	40–70 (22–39)	40–70 (22–39)	40–70 (22–39)
		Low Heat	30–60 (17–33)	30–60 (17–33)	30–60 (17–33)	30–60 (17–33)	30–60 (17–33)	30–60 (17–33)	30–60 (17–33)	30–60 (17–33)

ICS — Isolated Combustion System

AIRFLOW CAPACITY AND BLOWER DATA

UNIT SIZE		0401410A	0401712A	0601412A	0601714A	0801716A	0802120A	1002120A	1202422A
Rated External Static Pressure in.w.c.(kPa)	Heating	.10 (.025)	.10 (.025)	.12 (.030)	.12 (.030)	.15 (.038)	.15 (.038)	.20 (.050)	.20 (.050)
	Cooling	.5 (.125)							
Airflow Delivery @ Rated ESP (CFM)	High Heat	695	705	940	1000	1360	1360	1700	2125
	Low Heat	590	580	775	785	1095	1055	1325	1610
	Cooling	925	1085	1090	1505	1610	2015	2110	2055
Cooling Capacity (tons) @ 400, 350 CFM/ton	400 CFM/ton	2	2.5	2.5	3.5	4	5	5	5
	350 CFM/ton	2.5	3	3	4	4.5	5.5	6	6
Direct–Drive Motor Type		Electronically Commutated Motor (ECM)							
Direct–Drive Motor HP		1/2	1/2	1/2	3/4	3/4	1	1	1
Motor Full Load Amps		6.8	6.8	6.8	9.9	9.3	12.3	12.6	11.1
RPM Range		600 – 1200							
Speed Selections		5							
Blower Wheel Dia x Width	inches	11 x 7	11 x 8	11 x 7	11 x 8	11 x 8	11 x 10	11 x 10	11 x 11
Air Filtration System		Field Supplied							
Filter Used for Certified Watt Data		NAHA00506FB					NAHA00706FB		

CONTROLS

UNIT SIZE		0401410A	0401712A	0601412A	0601714A	0801716A	0802120A	1002120A	1202422A
Gas Connection Size		1/2” – NPT							
Burners (Monoport)		2	2	3	3	4	4	5	6
Gas Valve (Redundant)	Manufacturer	White Rodgers™							
Minimum Inlet Gas pressure in. w.c. (kPa)		4.5 (1.1)							
Maximum Inlet Gas pressure in. w.c. (kPa)		13.6 (3.4)							
Ignition Device		Silicon Nitride							
Limit Control		165	180	165	180	170	200	180	160
Htg Blower Control (Htg Off–Delay)		Adjustable: 90, 120, 150, 180 seconds							
Clg Blower Control (Time Delay Relay)		90 seconds							
Thermostat Connections		R, W/W1, W2, Y1, Y/Y2, G, DHUM, C							
Accessory Connections		EAC (115vac); HUM (24vac); 1–stg AC (via Y/Y2)							

Specifications subject to change without notice.

ELECTRICAL DATA									
UNIT SIZE		**0401410A**	**0401712A**	**0601412A**	**0601714A**	**0801716A**	**0802120A**	**1002120A**	**1202422A**
Input Voltage (Volts–Hertz–Phase)		115–60–1							
Operating Voltage Range	Min.–Max.	104 – 127							
Maximum Input Amps	Amps	7.5	7.5	7.6	10.7	10.1	13.1	13.5	12.0
Unit Ampacity	Amps	10.3	10.3	10.4	14.3	13.5	17.3	17.7	15.9
Minimum Wire Size	AWG	14	14	14	14	14	12	12	12
Maximum Wire Length @ Min Wire Size	Feet (M)	36 (11.0)	36 (11.0)	35 (10.7)	26 (7.9)	27 (8.2)	33 (10.1)	32 (9.8)	36 (11.0)
Maximum Fuse/Circuit Breaker (Time–Delay Type Recommended)	Amps	15	15	15	15	15	20	20	20
Transformer Capacity		24 VAC Output / 40 VA							
External Control Power Available	Heating	24.3 VA							
	Cooling	34.6 VA							

	A	B	C	D	
FURNACE SIZE	**CABINET WIDTH**	**OUTLET WIDTH**	**BOTTOM INLET WIDTH**	**AIR INTAKE**	**SHIP WT. LB (KG)**
0401410	14–3/16 (361)	12–1/2 (319)	12–9/16 (322)	7–1/8 (181)	125 (56)
0401712	17–1/2 (445)	15–7/8 (403)	16 (406)	8–3/4 (222)	135 (61)
0601412	14–3/16 (361)	12–1/2 (319)	12–9/16 (322)	7–1/8 (181)	136 (62)
0601714	17–1/2 (445)	15–7/8 (403)	16 (406)	8–3/4 (222)	146 (66)
0801716	17–1/2 (445)	15–7/8 (403)	16 (406)	8–3/4 (222)	156 (70)
0802120	21 (533)	19–3/8 (492)	19–1/2 (495)	10–1/2 (267)	161 (73)
1002120	21 (533)	19–3/8 (492)	19–1/2 (495)	10–1/2 (267)	171 (77)
1202422	24–1/2 (622)	22–7/8 (581)	23 (584)	12–1/4 (311)	195 (88)

MINIMUM CLEARANCES TO COMBUSTIBLE MATERIALS FOR ALL UNITS	
POSITION	**CLEARANCE in.(mm)**
REAR	0
FRONT (Combustion air openings in furnace and in structure)	1 (25)
Required for service	*24 (610)
All Sides of Supply Plenum	*1 (25)
Sides	0
Vent	0
Top of Furnace	1 (25)

* Consult your local building codes.

UNIT DIMENSIONS

NOTES:
1. Doors may vary by model.
2. Minimum return-air openings at furnace, based on metal duct. If flex duct is used, see flex duct manufacturer's recommendations for equivalent diameters.
   a. For 800 CFM-16-in. (406 mm) round or 14 1/2 x 12-in. (368 x 305 mm) rectangle.
   b. For 1200 CFM-20-in. (508 mm) round or 14 1/2 x 19 1/2-in. (368 x 495 mm) rectangle.
   c. For 1600 CFM-22-in. (559 mm) round or 14 1/2 x 22 1/16-in. (368 x 560mm) rectangle.
   d. Return air above 1800 CFM at 0.5 in. w.c. ESP on 24.5" casing, requires one of the following configurations: 2 sides, 1 side and a bottom or bottom only. See Air Delivery table in this document for specific use to allow for sufficient airflow to the furnace.
3. Vent and Combustion air pipes through blower compartment must use accessory "Vent Kit - Through the Cabinet". See accessory list for current part number.

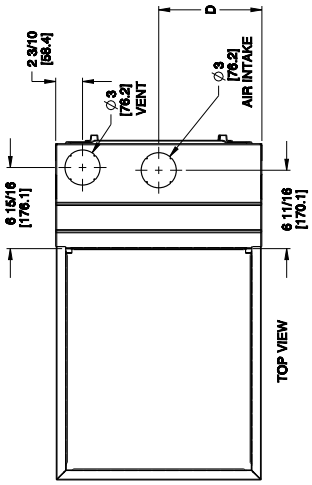

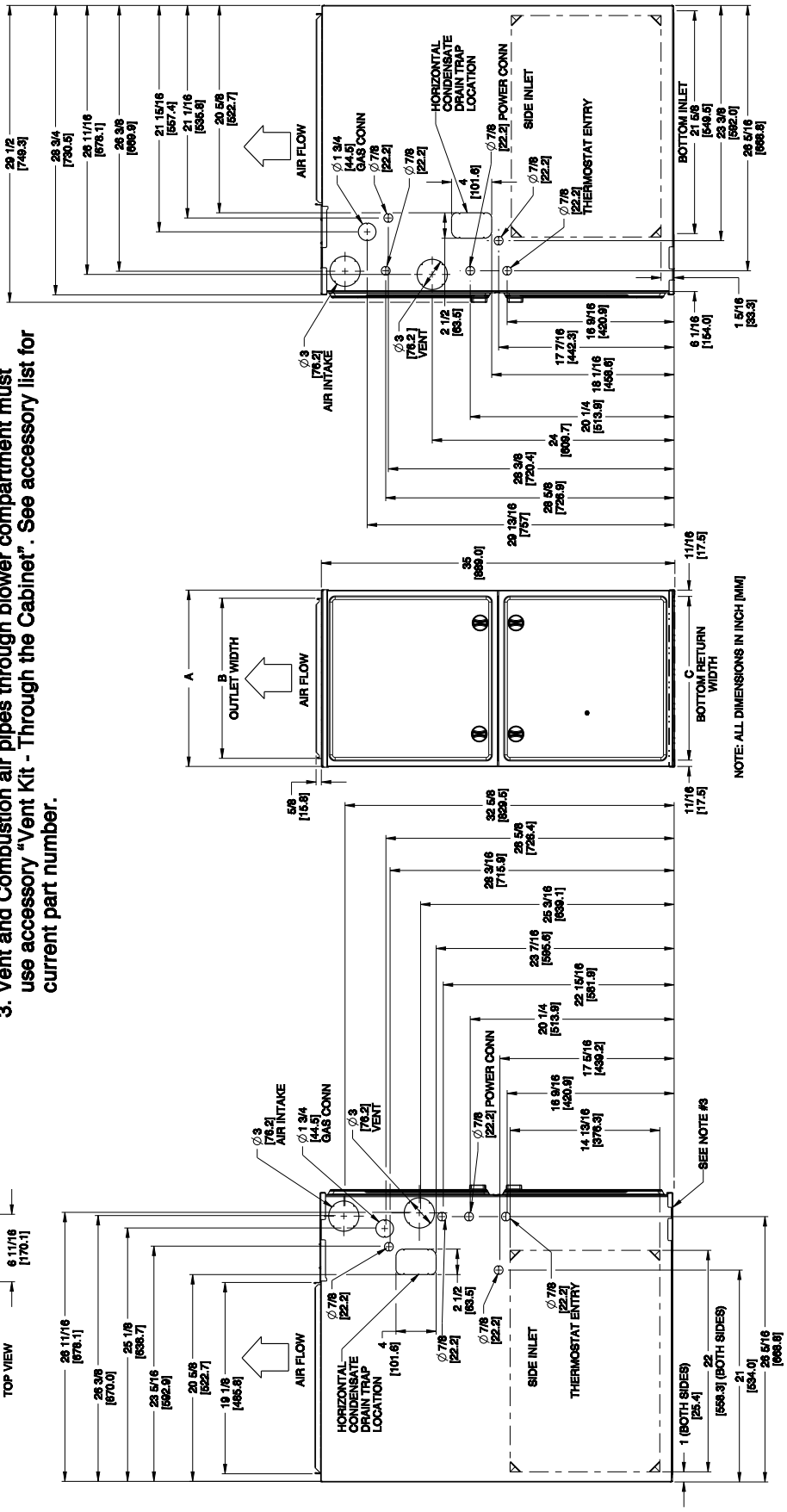

SD5060–4 Rev F

AIR DELIVERY – CFM (with filter)												
UNIT SIZE	RETURN-AIR CONNECTION	SPEED TAPS[2]	EXTERNAL STATIC PRESSURE (in. w.c.)									
			0.1	0.2	0.3	0.4	0.5	0.6	0.7	0.8	0.9	1.0
0401410	SIDE/BOTTOM	Gray	1120	1080	1030	980	925	875	820	760	690	630
		Yellow	880	845	810	780	740	710	680	640	615	570
		Blue	695	665	620	575	535	495	455	420	370	280
		Orange	640	595	540	495	460	420	370	310	260	230
		Red	570	525	475	425	385	330	255	220	- [6]	- [6]
0401712	SIDE/BOTTOM	Gray	1255	1220	1175	1130	1085	1040	990	940	880	825
		Yellow	940	905	870	840	805	770	735	695	665	630
		Blue	705	670	630	575	540	500	455	410	380	325
		Orange	580	535	480	425	380	335	290	235	- [6]	- [6]
		Red	555	485	425	375	330	280	215	- [6]	- [6]	- [6]
0601412	SIDE/BOTTOM	Gray	1265	1225	1185	1140	1090	1030	975	920	850	760
		Yellow	1115	1085	1060	1030	1000	970	930	880	810	715
		Orange	1000	970	940	910	880	845	815	770	735	695
		Blue	945	915	885	855	820	785	745	705	675	635
		Red	770	740	700	660	620	575	540	500	455	415
0601714	SIDE/BOTTOM	Gray	1720	1670	1620	1565	1505	1440	1375	1295	1220	1135
		Yellow	1325	1285	1255	1220	1185	1145	1115	1075	1040	1000
		Blue	1010	970	925	875	835	785	745	690	660	620
		Orange	1160	1115	1080	1045	1000	960	920	875	840	785
		Red	785	715	655	595	530	490	435	385	340	285
0801716	SIDE/BOTTOM	Gray	1810	1770	1720	1665	1610	1540	1475	1400	1315	1235
		Yellow	1535	1500	1475	1435	1405	1370	1340	1310	1245	1160
		Blue	1380	1340	1305	1270	1240	1200	1165	1130	1090	1050
		Orange	1180	1130	1095	1060	1015	975	935	895	850	800
		Red	1100	1045	1010	970	920	885	845	790	745	690
0802120	BOTTOM or TWO-SIDES [4, 5]	Gray	2290	2225	2155	2090	2015	1930	1845	1750	1640	1515
		Yellow	1810	1760	1725	1685	1640	1600	1555	1520	1480	1415
		Blue	1385	1340	1285	1240	1200	1140	1090	1050	995	950
		Orange	1560	1520	1475	1430	1385	1335	1295	1240	1200	1150
		Red	1055	985	910	860	795	750	680	615	565	495
1002120	BOTTOM or TWO-SIDES [4, 5]	Gray	2340	2295	2250	2195	2110	2030	1935	1835	1725	1605
		Yellow	1950	1900	1855	1800	1755	1705	1655	1605	1560	1485
		Blue	1750	1700	1650	1605	1555	1500	1455	1395	1350	1300
		Orange	1570	1520	1460	1410	1350	1300	1240	1195	1140	1095
		Red	1350	1280	1225	1155	1105	1045	1000	950	895	830
1202422	BOTTOM or TWO-SIDES [4, 5]	Gray	2275	2230	2185	2130	2055	1950	1825	1710	1610	1500
		Yellow	1875	1820	1770	1720	1660	1600	1550	1505	1450	1390
		Blue	2170	2125	2075	2025	1975	1900	1790	1695	1590	1470
		Orange [3]	1475	1420	1350	1280	1215	1165	1105	1050	995	930
		Red [3]	1625	1565	1505	1445	1385	1325	1275	1225	1170	1130

NOTE:

1. A filter is required for each return–air inlet. Airflow performance includes a 3/4 in. (19 mm) washable filter media such as contained in factory–authorized accessory filter rack. See accessory list. To determine airflow performance without this filter, assume an additional 0.1 in. W.C. available external static pressure.
2. ADJUST THE BLOWER SPEED TAPS AS NECESSARY FOR THE PROPER AIR TEMPERATURE RISE FOR EACH INSTALLATION.
3. Shaded areas indicate that this airflow range is BELOW THE RANGE ALLOWED FOR HIGH–STAGE HEATING OPERATION**. THESE AIRFLOW RANGES MAY ONLY BE USED FOR LOW–STAGE HEAT OR COOLING.**
4. Airflow over 1800 CFM require bottom return, two–side return, or bottom and side return. A minimum filter size of 20” x 25” is required.
5. For upflow applications, air entering from one side into both the side of the furnace and a return air base counts as a side and bottom return.
6. The ”–” entry indicates an unstable operating condition.

ACCESSORIES

PART NUMBER	COMPONENT NAME	DESCRIPTION	0401410	0401712	0601412	0601714	0801716	0802120	1002120	1202422
NAHB00101CT	EXTERNAL TRAP KIT	CONDENSATE TRAP	X	X	X	X	X	X	X	X
NAHA00110DA	DRAIN ACCESSORY	1/2" CPVC TO 3/4" PVC (10 PACK)	X	X	X	X	X	X	X	X
NAHA002CV	VENT TERMINATION KIT	2" CONCENTRIC VENT	X	X	X	X	X	X	X	
NAHA001CV		3" CONCENTRIC VENT			X	X	X	X	X	X
NAHA00101VC	INTERNAL VENT KIT	THROUGH THE CABINET	X	X	X	X	X	X	X	X
NAHA00301VT	DIRECT VENT TERMINATION KIT	2" BRACKET	X	X	X	X	X	X	X	
NAHA00401VT		3" BRACKET			X	X	X	X	X	X
NAHA00101CK	INLET AIR PIPE COUPLING	COUPLING FOR POLYPROPYLENE VENT SYSTEMS	X	X	X	X	X	X	X	X
NAHA00101HV	HORIZONTAL INSTALLATION KIT	TRAP GROMMET (DIRECT VENT APPLICATION ONLY)	X	X	X	X	X	X	X	X
NAHA00101HH	FREEZE PROTECT KIT	CONDENSATE DRAIN LINE – TAPE	X	X	X	X	X	X	X	X
NAHA00201HH	CONDENSATE FREEZE PROTECT KIT	CONDENSATE TRAP WITH HEAT PAD	X	X	X	X	X	X	X	X
NAHA01101SB	FLOOR BASE KIT	COMBUSTIBLE FLOOR	X	X	X	X	X	X	X	X
NAHB01001LP*	GAS CONVERSION KIT	NATURAL TO PROPANE	X	X	X	X	X	X	X	X
NAHB01001NG*		PROPANE TO NATURAL	X	X	X	X	X	X	X	X
NAHA00701WK	TWINNING KIT	OPERATION OF TWO IDENTICAL SIZE MODEL FURNACES			X	X	X	X	X	X
NAHA00506FB†	WASHABLE FILTER PACK	WASHABLE FILTER 1" X 16" X 25" (6 PACK)	X	X	X	X	X			
NAHA00706FB		WASHABLE FILTER 1" X 24" X 25" (6 PACK)						X	X	X
NAHB00501FF	EXTERNAL BOTTOM FILTER RACK	14" X 25" WASHABLE FILTER INCLUDED	X		X					
NAHB00601FF		17–1/2" X 25" WASHABLE FILTER INCLUDED		X		X	X			
NAHB00701FF		21" X 25" WASHABLE FILTER INCLUDED						X	X	
NAHB00801FF		24–1/2" X 25" WASHABLE FILTER INCLUDED								X
NAHA01001FF	SIDE FILTER RACK (NOT ADJUSTABLE)	16" X 25" RACK – FILTER NOT INCLUDED	X	X	X	X	X	X	X	X
NAHB00101CA	COIL ADAPTER KIT	WITH NO OFFSET	X	X	X	X	X	X	X	X
NAHB00201CA		WITH SINGLE OFFSET	X	X	X	X	X	X	X	X
NAHB00301CA		WITH DOUBLE OFFSET	X	X	X	X	X	X	X	X
NAHA01401RA	RETURN AIR KIT	14–3/16" WIDE	X		X					
NAHA01701RA		17–1/2" WIDE		X		X	X			
NAHA02101RA		21" WIDE						X	X	
NAHA02401RA		24–1/2" WIDE								X
NAHA001NK	CONDENSATE NEUTRALIZER KIT	NEUTRALIZES CONDENSATE	X	X	X	X	X	X	X	X

X Accessory available
† Suitable for side return filter rack and 17 inch external bottom filter rack.
* Factory authorized and field installed. Gas conversion kits are CSA recognized.

Part Number	Gas Type	Orifice Size
1185612	Natural	42
1176928	Natural	43
1185574	Natural	44
1177213	Natural	45

Part Number	Gas Type	Orifice Size
1183809	Natural	46
1185613	Natural	47
1185614	Natural	48

Part Number	Gas Type	Orifice Size
1184256	Propane	54
1185615	Propane	55
1185616	Propane	56
1185617	Propane	1.25 mm
1185618	Propane	1.30 mm

Copyright 2017 International Comfort Products
Lewisburg, Tennessee 37091 USA
www.GoICPCommercial.com

Specifications subject to change without notice.