Arcoaire®
Air Conditioning & Heating

F8MTL
Product Specifications

80% Two–Stage Heating Furnace

EASIER TO SELL
- 80% AFUE
- Cabinet air leakage less than 2.0% at 1.0 in. W.C. and cabinet air leakage less than 1.4% at 0.5 in. W.C. when tested in accordance with ASHRAE standard 193
- Supports two–stage cooling units
- Flame roll–out sensors standard
- Category I venting
- Blocked vent switch
- Dehumidification feature in cooling
- 24 VAC and 115 VAC humidifier terminal
- Electronic air cleaner terminal
- Twinning furnaces of same heating and cooling sizes with approved kit
- Low NOx units are designed for California installations and meet 40 ng/J NOx emissions. Can be installed in air quality management districts with a 40 ng/J NOx emissions requirement.

TOUGHER
- PSC blower motor
- Adjustable heating blower OFF delay
- Factory set blower ON delay
- RPJ aluminized steel heat exchanger
- High temperature limit control prevents overheating
- Direct ignition with Silicon Nitride ignitor

QUIETER
- Two–stage heating operation
- Two–stage induced draft blower
- In–shot burners
- Insulated blower compartment

EASIER TO INSTALL AND SERVICE
- 33 1/3” (847mm) high, for ease of installation
- Innovative knobs for easy door removal and secure attachment
- Factory shipped for natural gas, with propane gas conversion kits available
- Four position – upflow/downflow/horizontal (left/right) installation
- Three position vent elbow capability
- Through the casing flue pipe for counterflow applications
- Common venting with other Category I appliances
- Masonry chimney adapter available
- Self diagnostics
- Slide out blower assembly

LIMITED WARRANTY *
- 5 year No Hassle Replacement™ limited warranty
- 20 year heat exchanger limited warranty
- 5 year parts limited warranty
  - With timely registration, an additional 5 year parts limited warranty

* For residential applications only, See warranty certificate for complete details and restrictions, including warranty coverage of other applications.

Illustrations and photographs are only representative.
Some product models may vary.

⚠ WARNING

This furnace is not designed for use in mobile homes, trailers, or recreational vehicles. Such use could result in property damage and/or death.

AHRI CERTIFIED™ www.ahridirectory.org

Use of the AHRI Certified TM Mark indicates a manufacturer's participation in the program. For verification of certification for individual products, go to www.ahridirectory.org .

Certified System ISO 9001 QMI-SAI Global

DESIGN CERTIFIED

Model Number	Input (MBTUH)	Efficiency AFUE	Cooling Capacity CFM range @ .5 in. w.c. (125 Pa)	Dimensions H x W x D Inches (Millimeters)	Shipping Wt. Lbs (Kg)
F8MTL0451412	44,000	80%	745 – 1175	33–1/3 x 14–3/16 x 29 (847 x 360 x 737)	107 (49)
F8MTL0701412	66,000	80%	670 – 1240	33–1/3 x 14–3/16 x 29 (847 x 360 x 737)	115 (52)
F8MTL0901714	88,000	80%	1065 – 1385	33–1/3 x 17–1/2 x 29 (847 x 445 x 737)	127 (58)
F8MTL1102122	110,000	80%	1180 – 2235	33–1/3 x 21 x 29 (847 x 533 x 737)	152 (69)

MODEL NUMBER IDENTIFICATION GUIDE

DIGIT POSITION	1	2	3	4	5	6,7,8	9,10	11,12	13	14
	F	8	M	T	L	045	14	12	A	1

- F = Mainline; N = Entry — **EFFICIENCY**
- 8 = 80% AFUE — **POSITION**
- M = Multiposition — **TYPE**
- V = Variable Speed Blower Motor – ECM; X = ECM Blower Motor; S = Single–stage; T = Two–stage — **FEATURE**
- N = Standard; L = Low NOx — **HEAT INPUT**
- 045 = 44,000 BTU/hr; 070 = 66,000 BTU/hr; 090 = 88,000 BTU/hr; 110 = 110,000 BTU/hr — **CABINET WIDTH**
- 14 = 14–3/16”; 17 = 17–1/2”; 21 = 21” — **NOMINAL MAXIMUM COOLING AIRFLOW @ .5 IN. W.C.**
- 12 = 1200 CFM; 14 = 1400 CFM; 22 = 2200 CFM — SALES (MAJOR) REVISION DIGIT
- SALES (MAJOR) REVISION DIGIT — ENGINEERING (MINOR) REVISION DIGIT

ECM—Electronically Commutated Motor

ACCESSORIES PART NUMBER IDENTIFICATION GUIDE

DIGIT POSITION	1	2	3	4	5, 6, 7	8, 9	10, 11
	N	A	H	A	001	01	DH

- N = Non–Branded — **BRANDING**
- A = Accessory — **PRODUCT GROUP**
- H = Heating — **KIT USAGE**
- A = Original; B = 2nd Generation — **MAJOR SERIES**
- Product Identifier Number
- Package Quantity
- Type of Kit (Example: DH = Draft Hood – Chimney Adapter)

For California Residents:
For installation in SCAQMD only: This furnace does not meet the SCAQMD Rule 1111 14 ng/J NOx emission limit, and thus is subject to a mitigation fee of up to $450. This furnace is not eligible for the Clean Air Furnace Rebate Program: www.CleanAirFurnaceRebate.com

PHYSICAL DATA

NATURAL GAS			0451412	0701412	0901714	1102122
OUTPUT CAPACITY BTUH* (Nonweatherized ICS) †	Upflow	High	36,000	54,000	71,000	89,000
		Low	23,000	36,000	47,000	59,000
	Downflow/ Horizontal	High	34,000	51,000	68,000	85,000
		Low	23,000	36,000	47,000	59,000
INPUT BTUH*	Upflow	High	44,000	66,000	88,000	110,000
		Low	29,000	43,500	58,000	72,500
	Downflow/ Horizontal	High	42,000	63,000	84,000	105,000
		Low	29,000	43,500	58,000	72,500
AFUE † *	Nonweatherized ICS		80.0	80.0	80.0	80.0
TRANSFORMER (24 volt)			40 VA			
CERTIFIED TEMP RISE RANGE – °F(°C)		High	20–50 (11–28)	30—60 (17—33)	40—70 (22—39)	30–60 (17–33)
		Low	15–45 (8–25)	30—60 (17—33)	25–55 (14–30)	20–50 (11–28)
CERTIFIED EXT STATIC PRESSURE	Heating		0.10	0.12	0.15	0.20
	Cooling		0.50	0.50	0.50	0.50
AIRFLOW CFM‡	Heating High/Low		1030/860	885/695	1375/1195	1555/1295
	Cooling		1175	1240	1385	2235
LIMIT CONTROL			SPST			
HEATING BLOWER CONTROL			Solid-State Time Operation			
BURNERS (Monoport)			2	3	4	5
GAS CONNECTION SIZE			1/2 inch NPT			
GAS VALVE (Redundant) Manufacturer			White-Rodgers			
Minimum Inlet Pressure (in. w.c.)			4.5 (Natural Gas)			
Maximum Inlet Pressure (in. w.c.)			13.6 (Natural Gas)			
IGNITION DEVICE			Hot Surface			
COOLING CAPACITY CFM range (.5 in. w.c.)			745 – 1175	670 — 1240	1065 — 1385	1180 – 2235

* Gas input ratings are certified for elevations to 2000 ft. (610 M). In USA, for elevations above 2000 ft. (610 M), reduce ratings 4 percent for each 1000 ft. (305 M) above sea level. Refer to National Fuel Gas Code NFPA 54/ANSI Z223.1—2009 Table F.4 or furnace Installation Instructions.

† Capacity in accordance with U.S. Government DOE test procedures.

‡ Airflow shown is for bottom only return—air supply in comfort mode (as shipped). For air delivery above 1800 CFM, see Air Delivery Table for other options. A filter is required for each return-air supply.

ICS — Isolated Combustion System

ELECTRICAL DATA

F8MTL	VOLTS HERTZ PHASE	OPERATING VOLTAGE RANGE		MAXIMUM UNIT AMPS	MAXIMUM WIRE LENGTH FT (M)‡	MAXIMUM FUSE OR CKT BKR AMPS†	MINIMUM WIRE GAGE
		Maximum*	Minimum*				
0451412	115-60-1	127	104	7.1	38 (11.5)	15	14
0701412	115-60-1	127	104	7.3	37 (11.2)	15	14
0901714	115-60-1	127	104	8.2	34 (10.3)	15	14
1102122	115-60-1	127	104	13.7	32 (9.7)	20	12

* Permissible limits of the voltage range at which unit operates satisfactorily.

† Time–delay type is recommended.

‡ Length shown is as measured 1 way along wire path between unit and service panel for maximum 2 percent voltage drop.

UNIT DIMENSIONS

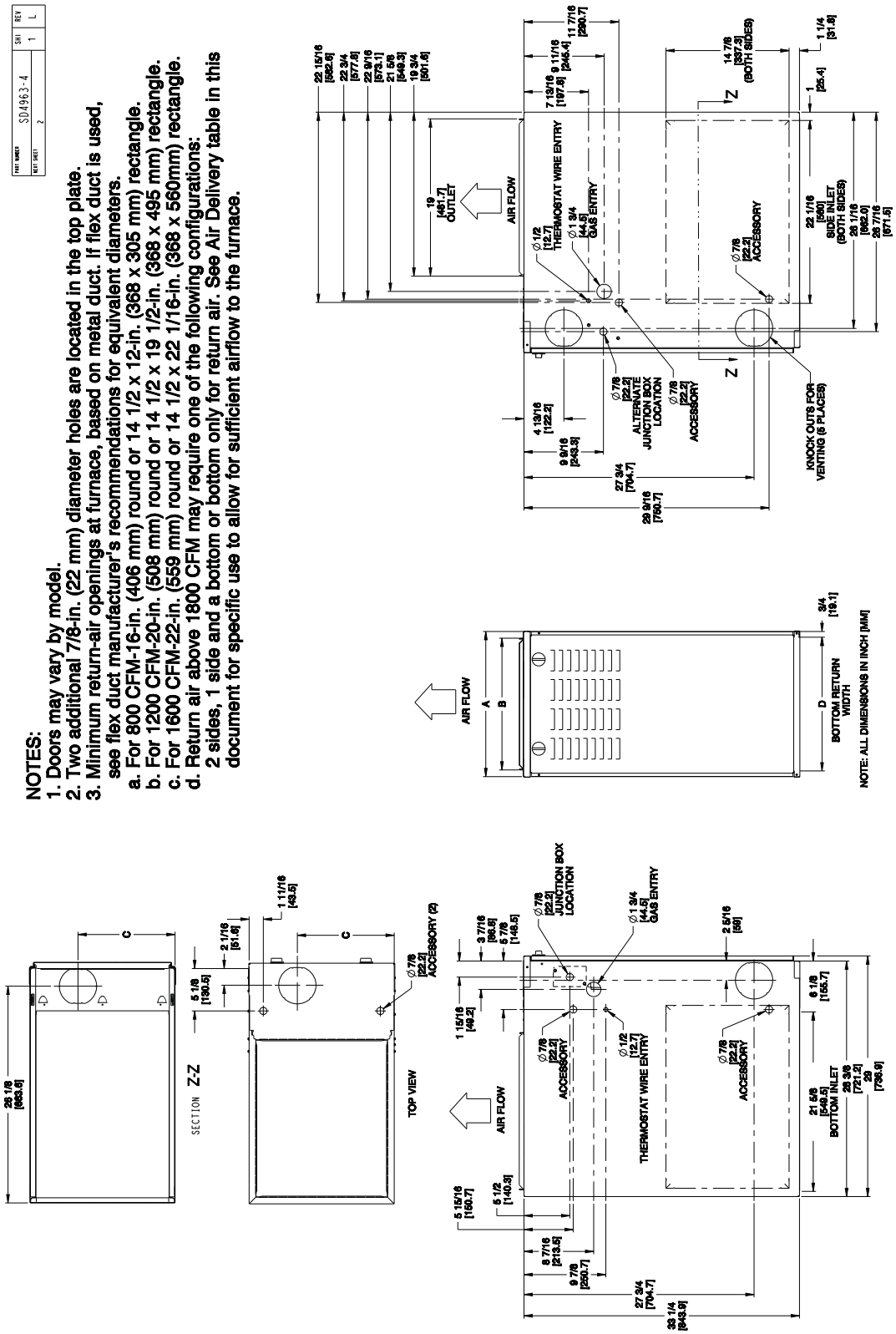

F8MTL	A CABINET WIDTH in (mm)	B OUTLET WIDTH in (mm)	C TOP AND BOTTOM FLUE COLLAR in (mm)	D BOTTOM INLET WIDTH in (mm)	FLUE COLLAR* in (mm)	SHIP WT LB (KG)
0451412	14–3/16 (360)	12–9/16 (319)	9–5/16 (237)	12–11/16 (322)	4 (102)	107 (49)
0701412	14–3/16 (360)	12–9/16 (319)	9–5/16 (237)	12–11/16 (322)	4 (102)	115 (52)
0901714	17–1/2 (445)	15–7/8 (403)	11–9/16 (294)	16–1/8 (410)	4 (102)	127 (58)
1102122	21 (533)	19–3/8 (492)	13–5/16 (338)	19–1/2 (495)	4 (102)	152 (69)

* 5 inch or 6 inch (127 or 152 mm) vent connector may be required in some cases.
† See Installation Instructions for complete installation requirements.

DOWNFLOW VENT CONFIGURATIONS

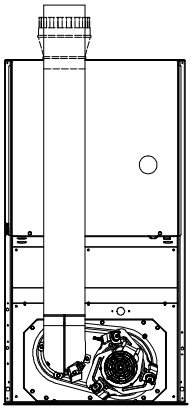

SEE NOTES: 1,2,4,5,7,8,9 A02061

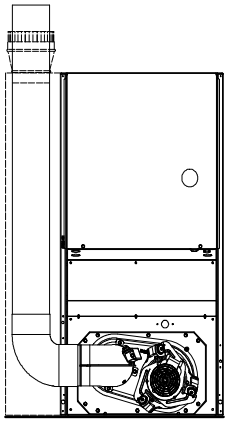

SEE NOTES: 1,2,4,5,6,7,8,9 A02062

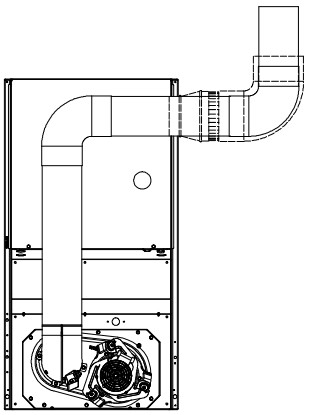

SEE NOTES: 1,2,3,4,5,7,8,9 A02063

DOWNFLOW CONTINUTED

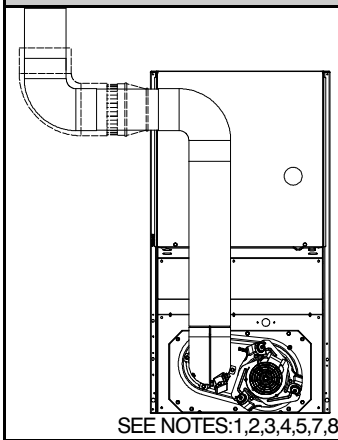

SEE NOTES:1,2,3,4,5,7,8,9 A02060

UPFLOW VENT CONFIGURATIONS

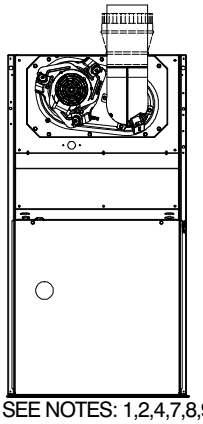

SEE NOTES: 1,2,4,7,8,9 A02058

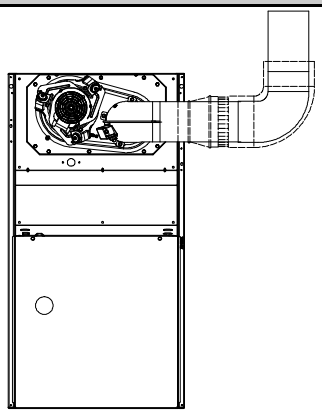

SEE NOTES: 1,2,3,4,7,8,9 A02059

HORIZONTAL RIGHT VENT CONFIGURATIONS

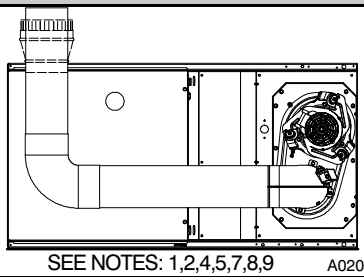

SEE NOTES: 1,2,4,5,7,8,9 A02070

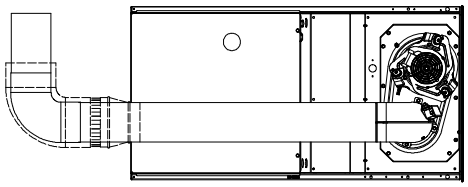

SEE NOTES: 1,2,4,5,7,8,9 A02068

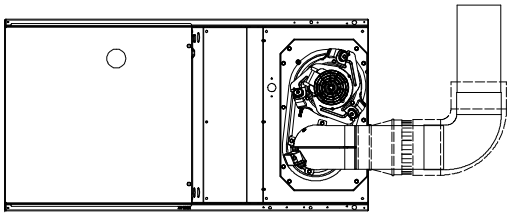

SEE NOTES: 1,2,4,7,8,9 A02069

HORIZONTAL LEFT VENT CONFIGURATIONS

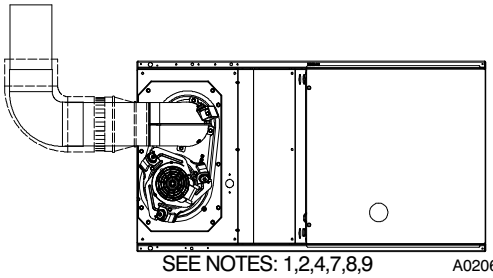

SEE NOTES: 1,2,4,7,8,9 A02064

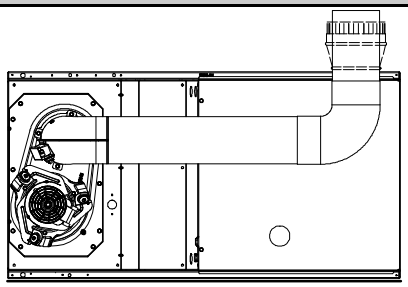

SEE NOTES: 1,2,4,5,7,8,9 A02065

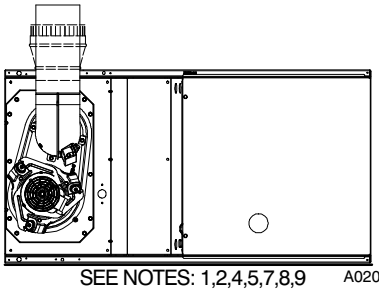

SEE NOTES: 1,2,4,5,7,8,9 A02066

HORIZONTAL LEFT VENT CONFIGURATIONS

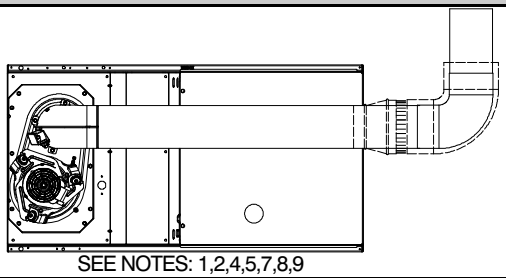

SEE NOTES: 1,2,4,5,7,8,9 A02067

Venting Notes

1. For common vent, vent connector sizing and vent material: United States−use the NFGC.
2. Immediately increase to 5 inch or 6 inch (127 or 152 mm) vent connector outside furnace casing when 5 inch (127 mm) vent connector is required, refer to Note 1 above.
3. Side outlet vent for upflow and downflow installations must use Type B vent immediately after exiting the furnace, except when Downflow Vent Guard Kit, is used in the downflow position.
4. Type−B vent where required, refer to Note 1 above.
5. 4 inch (102 mm) single−wall (26 ga. min.) vent must be used inside furnace casing and when the Downflow Vent Guard Kit is used external to the furnace.
6. Accessory Downflow Vent Guard Kit, required in downflow installations with lower vent configuration.
7. Chimney Adapter Kit may be required for exterior masonry chimney applications. Refer to Chimney Adapter Kit for sizing and complete application details.
8. Secure vent connector to furnace elbow with two (2) corrosion−resistant sheet metal screws, spaced approximately 180° apart.
9. Secure all other single wall vent connector joints with three (3) corrosion resistant screws spaced approximately 120° apart. Secure Type−B vent connectors per vent connector manufacturer's recommendations.

MINIMUM CLEARANCES TO COMBUSTIBLE MATERIALS FOR ALL UNITS

This forced air furnace is equipped for use with natural gas at altitudes 0 − 10,000 ft (0 − 3,050m).

An accessory kit, supplied by the manufacturer, shall be used to convert to propane gas use or may be required for some natural gas applications.

This furnace is for indoor installation in a building constructed on site.

The furnace may be installed on combustible flooring in alcove or closet at minimum clearance as indicated by the diagram from combustible material.

This furnace may be used with a Type B−1 Vent and may be vented in common with other gas fired appliances.

This furnace is approved for UPFLOW, DOWNFLOW, and HORIZONTAL installations.

Downflow Positions:

† Installation on non−combustible floors only.
For Installation on combustible flooring only when installed on special base or coil assembly.

∅ 18 inch front clearance required for alcove.

* Indicate supply or return sides when furnace is in the horizontal position. Line contact only permissible between lines formed by intersections of the Top and two Sides of the furnace jacket, and building joists, studs or framing.

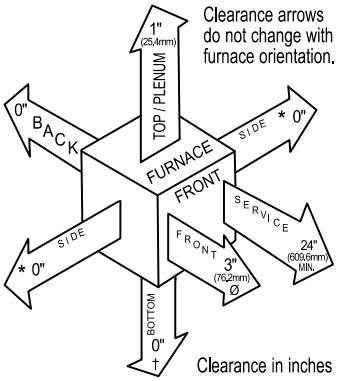

Vent Clearance to combustibles:
For Single Wall vents 6 inches (6 po).
For Type B-1 vent type 1 inch (1 po).

BLOWER PERFORMANCE DATA

F8MTL	0451412	0701412	0901714	1102122
DIRECT-DRIVE MOTOR Hp (PSC)	1/3	1/3	1/3	3/4
MOTOR FULL LOAD AMPS	5.1	5.1	5.2	11.0
RPM (Nominal) – Speeds	1075−5	1075−5	1075−4	1075−5
BLOWER WHEEL DIAMETER WIDTHS – in (mm)	10 x 6 (254 x 152)	10 x 6 (254 x 152)	10 x 8 (254 x 203)	11 x 11 (279 x 279)

PSC−Permanent Split Capacitor

AIR DELIVERY – CFM (with filter)*

F8MTL	RETURN AIR SUPPLY	SPEED	EXTERNAL STATIC PRESSURE (in. w.c.)									
			0.1	0.2	0.3	0.4	0.5	0.6	0.7	0.8	0.9	1.0
0451412	Bottom or Side(s)	High	1465	1400	1325	1250	1175	1085	980	860	725	—
		Med-High	1295	1260	1210	1155	1090	1015	930	830	700	—
		Medium	1150	1120	1085	1040	985	920	835	740	620	—
		Med-Low	1030	1008	980	945	895	835	765	685	—	—
		Low	860	835	810	780	745	700	635	555	—	—
0701412	Bottom or Side(s)	High	1440	1400	1355	1300	1240	1170	1090	1000	890	745
		Med-High	1180	1165	1150	1125	1085	1030	970	890	785	645
		Medium	1015	1020	1010	990	965	925	875	800	700	560
		Med-Low	885	885	880	865	845	815	770	700	605	475
		Low	695	700	700	690	670	640	600	540	460	345
0901714	Bottom or Side(s)	High	1650	1600	1535	1465	1385	1285	1175	1055	895	645
		Med-High	1515	1485	1440	1380	1300	1220	1115	990	830	600
		Med-Low	1385	1360	1320	1260	1195	1120	1025	915	710	565
		Low	1205	1180	1160	1120	1065	1005	925	810	630	510
1102122	Bottom Only	High	2530	2460	2380	2285	2200	2085	1970	1835	1695	1545
		Med-High	2225	2190	2135	2075	1995	1910	1805	1695	1565	1430
		Medium	1895	1885	1865	1820	1770	1700	1610	1520	1410	1290
		Med-Low	1565	1555	1535	1505	1465	1410	1350	1265	1175	1050
		Low	1320	1295	1265	1235	1205	1160	1105	1035	950	870
	Both Sides or 1 Side & Bottom	High	—	—	2415	2330	2235	2125	1995	1860	1735	1605
		Med-High	2205	2175	2120	2065	1975	1900	1790	1685	1580	1460
	1 Side Only	High	2485	2430	2360	2270	2175	2070	1950	1825	1685	1535
		Med-High	2155	2135	2100	2040	1970	1885	1790	1680	1560	1420
		Medium	1830	1830	1810	1780	1730	1665	1595	1505	1395	1275
		Med-Low	1520	1505	1490	1470	1430	1385	1330	1250	1165	1055
		Low	1275	1260	1240	1210	1180	1135	1090	1025	930	840

* A filter is required for each return—air supply. Airflow performance includes washable filter media such as contained in factory—authorized accessory filter rack. To determine airflow performance without this filter, assume an additional .1 available external static pressure.

— Indicates unstable operating conditions.

ACCESSORIES					
PART NUMBER	**DESCRIPTION**	**0451412**	**0701412**	**0901714**	**1102122**
NAHB00501FF	External Bottom Filter Rack, 14 inch (14 x 25 inch washable filter included)	X	X		
NAHB00601FF	External Bottom Filter Rack, 17 inch (16 x 25 inch washable filter included)			X	
NAHB00701FF	External Bottom Filter Rack, 21 inch (20 x 25 inch washable filter included)				X
NAHB00801FF	External Bottom Filter Rack, 24 inch (24 x 25 inch washable filter included)				
NAHA00506FB†	Washable filter, 1 inch 16 x 25 (6 pack)	X	X	X	
NAHA00706FB	Washable filter, 1 inch 24 x 25 (6 pack)				X
NAHA01101SB	Combustible Floor Base (Not required when evaporator coil case is used for downflow)	X	X	X	X
NAHB00301VC	Downflow Vent Guard (Not required when vent is routed through cabinet)	X	X	X	X
NAHA00601WK	Twinning Kit (Upflow, Downflow and Horizontal)	X	X	X	X
NAHA00401DH	Chimney Adapter Kit 4−in. vent	X	X	X	X
NAHA00301DH	Chimney Adapter Kit 5−in. vent				
NAHB01001LP*	Natural−to−Propane Conversion Kit	X	X	X	X
NAHB01001NG*	Propane−to−Natural Conversion Kit	X	X	X	X
NAHA00201HL	High Altitude Kit	X	X	X	X

X Accessory available
† Suitable for 17 inch external bottom filter rack.
* Factory authorized and field installed. Gas conversion kits are CSA recognized.

Copyright 2018 International Comfort Products
Lewisburg, Tennessee 37091 USA
www.GoArcoaire.com
Specifications subject to change without notice.