N80VSL
4-Way Multipoise, Non-Condensing
33-1/3 in. Gas Furnace
Input Capacities: 045K thru 110K BTUh

KeepRite®

Product Data

A200116

Illustrations and photographs are only representative. Some product models may vary.

⚠ WARNING

This furnace is not designed for use in mobile homes, trailers, or recreational vehicles. Such use could result in property damage and/or death.

AHRI CERTIFIED™ www.ahridirectory.org

Use of the AHRI Certified TM Mark indicates a manufacturer's participation in the program. For verification of certification for individual products, go to www.ahridirectory.org .

Certified System ISO 9001 Quality

A200115

EASIER TO SELL

- 80% AFUE
- Flame roll-out sensors standard
- Category I venting
- Blocked vent switch
- Louvered door
- 24 VAC humidifier terminal
- Electronic air cleaner terminal
- N80VSL - Low NOx units are designed for California installations and meet 40 ng/J NOx emission limits. Can be installed in air quality management districts with a 40 ng/J NOx emissions limit.
- Cabinet air leakage less than 2.0% at 1.0 in. W.C. and cabinet air leakage less than 1.4% at 0.5 in. W.C. when tested in accordance with ASHRAE standard 193

TOUGHER

- Adjustable heating blower OFF delay
- Factory set blower ON delay
- RPJ aluminized steel heat exchanger
- High temperature limit control prevents overheating
- Direct ignition with Silicon Nitride ignitor
- One piece prepainted steel cabinet

QUIETER

- In-shot burners
- Variable-Speed, Constant Torque (VCT) ECM blower motor
- Fully insulated cabinet

EASIER TO INSTALL AND SERVICE

- 33 1/3" (847mm) high, for ease of installation
- Quarter turn knobs for easy door removal and secure attachment
- Factory shipped for natural gas, with propane gas conversion kits available
- Four position - upflow/downflow/horizontal (left/right) installation
- Three position inducer elbow capability
- Through the casing flue pipe for counterflow applications
- Common venting with other Category I appliances
- Masonry chimney adapter available
- Self diagnostics
- Slide out blower assembly

LIMITED WARRANTY*

- 20 year heat exchanger limited warranty
- 5 year parts limited warranty
  - With timely registration, an additional 5 year parts limited warranty

* For residential applications only, See warranty certificate for complete details and restrictions, including warranty cover

Model	Input (MBTUH)	Efficiency AFUE	Cooling Capacity CFM range @ .5 in. w.c. (125 Pa)	Dimensions H x W x D Inches (Millimeters)	Shipping Wt. Lbs(Kg)
N80VSL0451412	44,000	80%	380 - 1310	33-1/3 x 14-3/16 x 29 (847 x 306 x 737)	112 (50.8)
N80VSL0451716	44,000	80%	390 - 1350	33-1/3 x 17-1/2 x 29 (847 x 445 x 737)	120 (54)
N80VSL0701716	66,000	80%	590 - 1720	33-1/3 x 17-1/2 x 29 (847 x 445 x 737)	129 (59)
N80VSL0702120	66,000	80%	505 - 1775	33-1/3 x 21 x 29 (847 x 533 x 737)	141 (63)
N80VSL0902120	88,000	80%	445 - 1915	33-1/3 x 21 x 29 (847 x 533 x 737)	143 (65)
N80VSL0902420	88,000	80%	585 - 1980	33-1/3 x 24-1/2 x 29 (847 x 622 x 737)	150 (68)
N80VSL1102422	110,000	80%	495 - 2280	33-1/3 x 24-1/2 x 29 (847 x 622 x 737)	153.5 (70)

MODEL NUMBER NOMENCLATURE

DIGIT POSITION 1 2,3 4 5 6 7-9 10,11 12,13 14 15

BRAND (1)
F, G, N, R

EFFICIENCY (2,3)
80 - 80% AFUE
92 - 92% AFUE
95 - 95% AFUE
96 - 96% AFUE
97 - 97% AFUE

MOTOR TYPE (4)
C = Constant Airflow Variable-Speed ECM
E = Fixed-Speeds, Constant Torque (FCT) ECM
P = PSC
V = Variable Speed, Constant Torque (VCT) ECM

HEATING STAGES (5)
M - Modulating
S - Single Stage
T - Two Stage

FEATURE (6)
L = Low NOx
M = Mobile/Manufactured Home
N = Standard NOx
U = Ultra Low NOx

HEATING INPUT (7-9)
026 = 26,000 BTU/h
040 = 40,000 BTU/h
045 = 45,000 BTU/h
.....
155 = 155,000 BTU/h

CABINET WIDTH (10,11)
14 = 14.2”
17 = 17.5”
21 = 21.0”
24 = 24.5”

COOLING CAPACITY (12,13)
08 = 800 CFM
10 = 1000 CFM
12 = 1200 CFM
14 = 1400 CFM
16 = 1600 CFM
20 = 2000 CFM
22 = 2200 CFM

MAJOR SERIES (14)
A, B, C...

MINOR SERIES (15)
1, 2, 3...

A190043

For California Residents:

For installation in SCAQMD only: This furnace does not meet the SCAQMD Rule 1111 14 ng/J NOx emission limit, and thus is subject to a mitigation fee of up to $450. This furnace is not eligible for the Clean Air Furnace Rebate Program: www.CleanAirFurnaceRebate.com

MINIMUM CLEARANCES TO COMBUSTIBLE MATERIALS FOR ALL UNITS

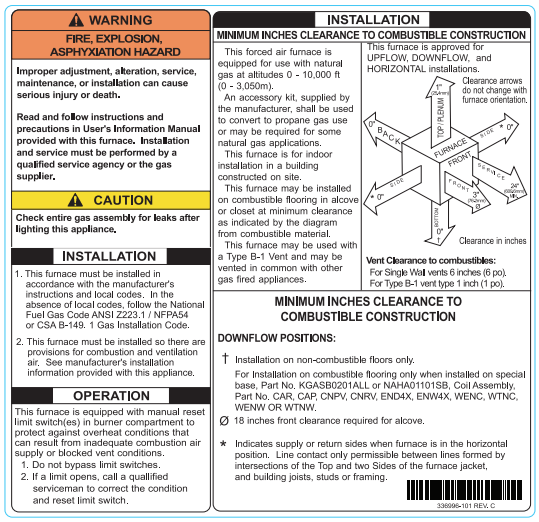

WARNING

FIRE, EXPLOSION, ASPHYXIATION HAZARD

Improper adjustment, alteration, service, maintenance, or installation can cause serious injury or death.

Read and follow instructions and precautions in User's Information Manual provided with this furnace. Installation and service must be performed by a qualified service agency or the gas supplier.

CAUTION

Check entire gas assembly for leaks after lighting this appliance.

INSTALLATION

1. This furnace must be installed in accordance with the manufacturer's instructions and local codes. In the absence of local codes, follow the National Fuel Gas Code ANSI Z223.1 / NFPA54 or CSA B-149. 1 Gas Installation Code.
2. This furnace must be installed so there are provisions for combustion and ventilation air. See manufacturer's installation information provided with this appliance.

OPERATION

This furnace is equipped with manual reset limit switch(es) in burner compartment to protect against overheat conditions that can result from inadequate combustion air supply or blocked vent conditions.

1. Do not bypass limit switches.
2. If a limit opens, call a qualified serviceman to correct the condition and reset limit switch.

INSTALLATION

MINIMUM INCHES CLEARANCE TO COMBUSTIBLE CONSTRUCTION

This forced air furnace is equipped for use with natural gas at altitudes 0 - 10,000 ft (0 - 3,050m).

An accessory kit, supplied by the manufacturer, shall be used to convert to propane gas use or may be required for some natural gas applications.

This furnace is for indoor installation in a building constructed on site.

This furnace may be installed on combustible flooring in alcove or closet at minimum clearance as indicated by the diagram from combustible material.

This furnace may be used with a Type B-1 Vent and may be vented in common with other gas fired appliances.

This furnace is approved for UPFLOW, DOWNFLOW, and HORIZONTAL installations.

Clearance arrows do not change with furnace orientation.

Clearance in inches

Vent Clearance to combustibles:
For Single Wall vents 6 inches (6 po).
For Type B-1 vent type 1 inch (1 po).

MINIMUM INCHES CLEARANCE TO COMBUSTIBLE CONSTRUCTION

DOWNFLOW POSITIONS:

† Installation on non-combustible floors only.
For Installation on combustible flooring only when installed on special base, Part No. KGASB0201ALL or NAHA01101SB, Coil Assembly, Part No. CAR, CAP, CNPV, CNRV, END4X, ENW4X, WENC, WTNC, WENW OR WTNW.

Ø 18 inches front clearance required for alcove.

★ Indicates supply or return sides when furnace is in the horizontal position. Line contact only permissible between lines formed by intersections of the Top and two Sides of the furnace jacket, and building joists, studs or framing.

336996-101 REV. C

A10269

PHYSICAL DATA

Unit Size		0451412	0451716	0701716	0702120	0902120	0902420	11024220
RATINGS AND PERFORMANCE								
Input Btuh* **Nonweatherized ICS**	**All Standard All Low NOx Upflow**	44,000	44,000	66,000	66,000	88,000	88,000	110,000
	All Low Nox Downflow/Horizontal	42,000	42,000	63,000	63,000	84,000	84,000	105,000
Output Capacity (Btuh)† Nonweatherized ICS	**All Standard All Low NOx Upflow**	35,000	35,000	54,000	53,000	71,000	72,000	90,000
	All Low Nox Downflow/Horizontal	34,000	34,000	51,000	51,000	68,000	69,000	86,000
AFUE†		80.00	80.00	80.00	80.00	80.00	80.00	80.00
Certified Temperature Rise Range - °F (°C)		30-60 (17-33)	30-60 (17-33)	25-55 (14-30)	25-55 (14-30)	25-55 (14-30)	30-60 (17-33)	30-60 (17-33)
Certified External Static Pressure	**Heat/Cool**	0.10/0.50	0.10/0.50	0.12/0.50	0.12/0.50	0.15/0.50	0.15/0.50	0.20/0.50
Airflow CFM‡	**Heating**	870	925	1385	1425	1800	1710	2090
	Cooling	1310	1350	1720	2045	1915	1980	2280
ELECTRICAL								
Unit Volts-Hertz-Phase		115-60-1						
Operating Voltage Range	**Min-Max**	104-127						
Maximum Unit Amps		7.9	7.9	10.8	13.2	11.1	11.1	13.9
Unit Ampacity		10.7	10.7	14.3	17.3	14.6	14.6	18.1
Maximum Wire Length (Measure 1 Way in Ft (M)		34 (10.6)	34 (10.6)	25 (7.9)	33 (10.1)	25 (7.7)	25 (7.7)	31 (9.7)
Minimum Wire Size		14	14	14	12	14	14	12
Maximum Fuse or Ckt Bkr Size (Amps)**		15	15	15	20	15	15	20
Transformer (24v)		40va						
External Control Power Available	**Heating**	12va						
	Cooling	35va						
Air Conditioning Blower Relay		Standard						
CONTROLS								
Heating Blower Control		Solid State Time Operation						
Burners (Monoport)		2	2	3	3	4	4	5
Gas Connection Size		1/2in. NPT						
GAS CONTROLS								
Gas Valve (Redundant)	**Mfr.**	WhiteRodgers						
	Min. inlet pressure (In. W.C.)	4.5 (Natural Gas)						
	Max. inlet pressure (In. W.C.)	13.6 (Natural Gas)						
Ignition Device		Hot Surface						
Factory installed orifice		Size 43						
BLOWER DATA								
Direct Drive Motor HP		1/2	1/2	3/4	1	3/4	3/4	1
Motor Full Load Amps		6.7	6.7	9.6	12.0	9.6	9.6	12.0
RPM (Nominal)Speeds		1200	1200	1200	1200	1200	1200	1200
Blower Wheel Diameter x Width - In. (mm)		10 x 6 (254x152)	10 x 8 (254x203)	11 x 8 (279x203)	11 x 10 (254x279)	11 X 11 (279x279)	11 X 11 (279x279)	11 X 11 (279x279)

*. Gas input ratings are certified for elevations to 2000 ft. (610 M). In USA, For elevations above 2000 ft (610 M), reduce ratings 4 percent for each 1000 ft (305 M) above sea level. Refer to National Fuel Gas Code NFPA 54/ANSI Z223.1 Table F.4 or furnace installation instructions

†. Capacity in accordance with U.S. Government DOE test procedures.

‡. Airflow shown is for bottom only return-air supply. For air delivery above 1800 CFM, see Air Delivery table for other options. A filter is required for each return-air supply. An airflow reduction of up to 7 percent may occur when using the factory-specified 4-5/16-in. (110 mm) wide, high efficiency media filter.

**. Time-delay type is recommended.

ICS = Isolated Combustion System

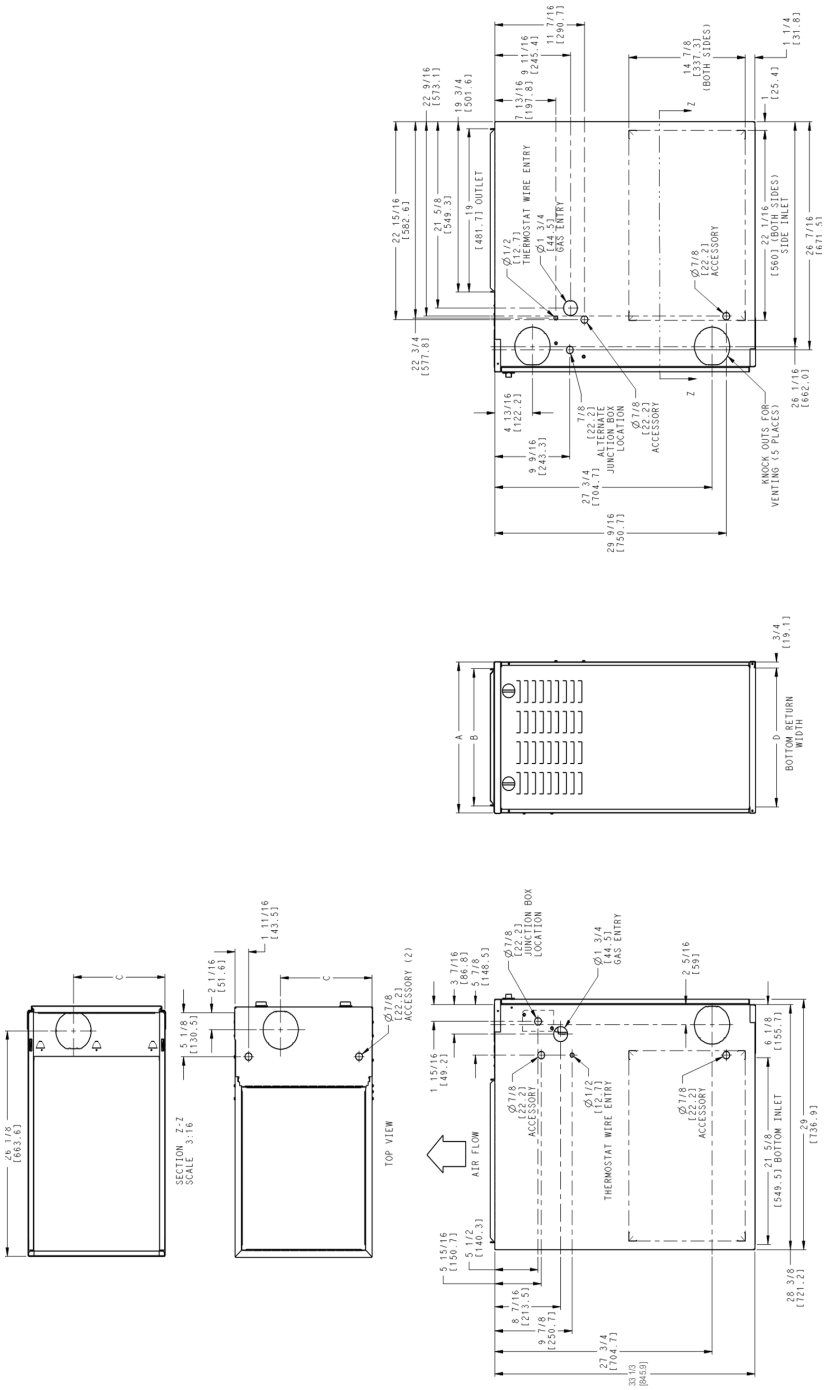

A190084

DIMENSIONS

FURNACE SIZE	A CABINET WIDTH	B OUTLET WIDTH	C TOP AND BOTTOM FLUE COLLAR	D BOTTOM INLET WIDTH	VENT CONNECTION SIZE	SHIP WT. LB. (KG)
N80VSL0451412	14-3/16 (306)	12-9/16 (237)	9-5/16 (237)	12-11/19 (322)	4 (102)	112 (50.8)
N80VSL0451716	17-1/2 (445)	15-7/8 (403)	11-9/16 (294)	16 (406)	4 (102)	120 (54)
N80VSL0701716	17-1/2 (445)	15-7/8 (403)	11-9/16 (294)	16 (406)	4 (102)	129 (59)
N80VSL0702120	21 (533)	19-3/8 (492)	13-5/16 (338)	19-1/2 (495)	4 (102)	141 (63)
N80VSL0902120	21 (533)	19-3/8 (492)	13-5/16 (338)	19-1/2 (495)	4 (102)	143 (65)
N80VSL0902420	24-1/2 (622)	22-7/8 (581)	15-1/16 (383)	23 (584)	4 (102)	150 (68)
N80VSL1102422	24-1/2 (622)	22-7/8 (581)	15-1/16 (383)	23 (584)	4 (102)	153.5 (70)

Manufacturer reserves the right to change, at any time, specifications and designs without notice and without obligations.

AIR DELIVERY

Air Delivery - CFM (With Filter)*

COOLING[4] AND HEATING AIR DELIVERY - CFM (Bottom Return[5] with Filter)													
(SW1-5 and SW2-2 set to OFF, except as indicated. See Notes 1 and 2.)													
Unit Size: 0451412	**Clg/CF Switch settings**			**External Static Pressure (ESP)**									
Clg Switches:	**SW2-8**	**SW2-7**	**SW2-6**	**0.1**	**0.2**	**0.3**	**0.4**	**0.5**	**0.6**	**0.7**	**0.8**	**0.9**	**1.0**
Clg Default:	OFF	OFF	OFF	1175	1140	1105	1075	1040	1015	980	945	910	875
Cooling (SW2-8,7,6)	OFF	OFF	ON	610	560	500	440	380	See Note 4				
	OFF	ON	OFF	805	760	720	670	625	575	530	485	See Note 4	
	OFF	ON	ON	1010	970	930	895	860	825	785	745	705	665
	ON	OFF	OFF	1175	1140	1105	1075	1040	1015	980	945	910	875
	ON	OFF	ON	1345	1310	1280	1250	1220	1190	1165	1140	1095	1015
	ON	ON	OFF	1480	1435	1395	1350	1310	1265	1220	1185	1115	1015
	ON	ON	ON	1480	1435	1395	1350	1310	1265	1220	1185	1115	1015
	Maximum Clg Airflow[2]			1480	1435	1395	1350	1310	1265	1220	1185	1115	1015
CF Switches	**SW2-5**	**SW2-4**	**SW2-3**	**0.1**	**0.2**	**0.3**	**0.4**	**0.5**	**0.6**	**0.7**	**0.8**	**0.9**	**1.0**
Low-Clg Default:	OFF	OFF	OFF	610	560	500	440	380	See Note 4				
Low-Cooling (SW2-5,4,3)	OFF	OFF	ON	610	560	500	440	380	See Note 4				
	OFF	ON	OFF	805	760	720	670	625	575	530	485	See Note 4	
	OFF	ON	ON	1010	970	930	895	860	825	785	745	705	665
	ON	OFF	OFF	1175	1140	1105	1075	1040	1015	980	945	910	875
	ON	OFF	ON	1345	1310	1280	1250	1220	1190	1165	1140	1095	1015
	ON	ON	OFF	1480	1435	1395	1350	1310	1265	1220	1185	1115	1015
	ON	ON	ON	1480	1435	1395	1350	1310	1265	1220	1185	1115	1015
Cont. Fan Default:	OFF	OFF	OFF	610	560	500	440	380	See Note 4				
Continuous Fan (SW2-5,4,3)	OFF	OFF	ON	610	560	500	440	380	See Note 4				
	OFF	ON	OFF	805	760	720	670	625	575	530	485	See Note 4	
	OFF	ON	ON	1010	970	930	895	860	825	785	745	705	665
	ON	OFF	OFF	1010	970	930	895	860	825	785	745	705	665
	ON	OFF	ON	1010	970	930	895	860	825	785	745	705	665
	ON	ON	OFF	1010	970	930	895	860	825	785	745	705	665
	ON	ON	ON	1010	970	930	895	860	825	785	745	705	665
Heating (SW1)	Heat Airflow[3]			870	825	785	745	700	655	615	570	530	480
Unit Size: 0451716	**Clg/CF Switch settings**			**External Static Pressure (ESP)**									
Clg Switches:	**SW2-8**	**SW2-7**	**SW2-6**	**0.1**	**0.2**	**0.3**	**0.4**	**0.5**	**0.6**	**0.7**	**0.8**	**0.9**	**1.0**
Clg Default:	OFF	OFF	OFF	1525	1490	1445	1400	1350	1300	1250	1200	1140	1035
Cooling (SW2-8,7,6)	OFF	OFF	ON	655	590	530	465	390	335	See Note 4			
	OFF	ON	OFF	825	770	715	665	615	560	495	445	395	350
	OFF	ON	ON	1025	980	940	895	850	810	765	725	680	630
	ON	OFF	OFF	1200	1160	1125	1085	1050	1010	975	935	900	860
	ON	OFF	ON	1385	1350	1320	1285	1250	1215	1180	1145	1110	1030
	ON	ON	OFF	1525	1490	1445	1400	1350	1300	1250	1200	1140	1035
	ON	ON	ON	1525	1490	1445	1400	1350	1300	1250	1200	1140	1035
	Maximum Clg Airflow[2]			1525	1490	1445	1400	1350	1300	1250	1200	1140	1035
CF Switches	**SW2-5**	**SW2-4**	**SW2-3**	**0.1**	**0.2**	**0.3**	**0.4**	**0.5**	**0.6**	**0.7**	**0.8**	**0.9**	**1.0**
Low-Clg Default:	OFF	OFF	OFF	655	590	530	465	390	335	See Note 4			
Low-Cooling (SW2-5,4,3)	OFF	OFF	ON	655	590	530	465	390	335	See Note 4			
	OFF	ON	OFF	825	770	715	665	615	560	495	445	395	350
	OFF	ON	ON	1025	980	940	895	850	810	765	725	680	630
	ON	OFF	OFF	1200	1160	1125	1085	1050	1010	975	935	900	860
	ON	OFF	ON	1385	1350	1320	1285	1250	1215	1180	1145	1110	1030
	ON	ON	OFF	1525	1490	1445	1400	1350	1300	1250	1200	1140	1035
	ON	ON	ON	1525	1490	1445	1400	1350	1300	1250	1200	1140	1035
Cont. Fan Default:	OFF	OFF	OFF	655	590	530	465	390	335	See Note 4			
Continuous Fan (SW2-5,4,3)	OFF	OFF	ON	655	590	530	465	390	335	See Note 4			
	OFF	ON	OFF	825	770	715	665	615	560	495	445	395	350
	OFF	ON	ON	1025	980	940	895	850	810	765	725	680	630
	ON	OFF	OFF	1025	980	940	895	850	810	765	725	680	630
	ON	OFF	ON	1025	980	940	895	850	810	765	725	680	630
	ON	ON	OFF	1025	980	940	895	850	810	765	725	680	630
	ON	ON	ON	1025	980	940	895	850	810	765	725	680	630
Heating (SW1)	Heat Airflow[3]			925	875	830	780	735	685	635	590	540	490

Air Delivery - CFM (With Filter)* (Continued)

COOLING[4] AND HEATING AIR DELIVERY - CFM (Bottom Return[5] with Filter)

(SW1-5 and SW2-2 set to OFF, except as indicated. See Notes 1 and 2.)

Unit Size: 0701716	Clg/CF Switch settings			External Static Pressure (ESP)									
Clg Switches:	**SW2-8**	**SW2-7**	**SW2-6**	**0.1**	**0.2**	**0.3**	**0.4**	**0.5**	**0.6**	**0.7**	**0.8**	**0.9**	**1.0**
Clg Default:	OFF	OFF	OFF	1595	1560	1520	1485	1445	1410	1375	1335	1300	1265
Cooling (SW2-8,7,6)	OFF	OFF	ON	660	585	515	445	370	See Note 4				
	OFF	ON	OFF	825	765	705	645	590	530	470	410	365	310
	OFF	ON	ON	1025	970	915	860	810	760	705	640	585	530
	ON	OFF	OFF	1225	1180	1135	1085	1040	995	950	910	865	820
	ON	OFF	ON	1390	1350	1305	1265	1225	1180	1140	1100	1060	1020
	ON	ON	OFF	1595	1560	1520	1485	1445	1410	1375	1335	1300	1265
	ON	ON	ON	1855	1815	1785	1750	1720	1675	1625	1575	1525	1475
	Maximum Clg Airflow[2]			1855	1815	1785	1750	1720	1675	1625	1575	1525	1475
CF Switches	**SW2-5**	**SW2-4**	**SW2-3**	**0.1**	**0.2**	**0.3**	**0.4**	**0.5**	**0.6**	**0.7**	**0.8**	**0.9**	**1.0**
Low-Clg Default:	OFF	OFF	OFF	660	585	515	445	370	See Note 4				
Low-Cooling (SW2-5,4,3)	OFF	OFF	ON	660	585	515	445	370	See Note 4				
	OFF	ON	OFF	825	765	705	645	590	530	470	410	365	310
	OFF	ON	ON	1025	970	915	860	810	760	705	640	585	530
	ON	OFF	OFF	1225	1180	1135	1085	1040	995	950	910	865	820
	ON	OFF	ON	1390	1350	1305	1265	1225	1180	1140	1100	1060	1020
	ON	ON	OFF	1595	1560	1520	1485	1445	1410	1375	1335	1300	1265
	ON	ON	ON	1855	1815	1785	1750	1720	1675	1625	1575	1525	1475
Cont. Fan Default:	OFF	OFF	OFF	660	585	515	445	370	See Note 4				
Continuous Fan (SW2-5,4,3)	OFF	OFF	ON	660	585	515	445	370	See Note 4				
	OFF	ON	OFF	825	765	705	645	590	530	470	410	365	310
	OFF	ON	ON	1025	970	915	860	810	760	705	640	585	530
	ON	OFF	OFF	1025	970	915	860	810	760	705	640	585	530
	ON	OFF	ON	1025	970	915	860	810	760	705	640	585	530
	ON	ON	OFF	1025	970	915	860	810	760	705	640	585	530
	ON	ON	ON	1025	970	915	860	810	760	705	640	585	530
Heating (SW1)	Heat Airflow[3]			1395	1350	1310	1270	1230	1185	1145	1105	1065	1025

Unit Size:0702120	Clg/CF Switch settings			External Static Pressure (ESP)									
Clg Switches:	**SW2-8**	**SW2-7**	**SW2-6**	**0.1**	**0.2**	**0.3**	**0.4**	**0.5**	**0.6**	**0.7**	**0.8**	**0.9**	**1.0**
Clg Default:	OFF	OFF	OFF	1930	1895	1855	1815	1775	1740	1700	1665	1630	1595
Cooling (SW2-8,7,6)	OFF	OFF	ON	810	735	660	585	505	See Note 4				
	OFF	ON	OFF	1010	945	885	820	760	695	625	565	510	455
	OFF	ON	ON	1205	1150	1090	1040	985	930	875	820	760	705
	ON	OFF	OFF	1400	1345	1295	1245	1200	1155	1105	1060	1005	960
	ON	OFF	ON	1580	1540	1495	1445	1405	1360	1320	1275	1235	1190
	ON	ON	OFF	1930	1895	1855	1815	1775	1740	1700	1665	1630	1595
	ON	ON	ON	2245	2195	2145	2095	2045	1995	1935	1885	1835	1785
	Maximum Clg Airflow[2]			2245	2195	2145	2095	2045	1995	1935	1885	1835	1785
CF Switches	**SW2-5**	**SW2-4**	**SW2-3**	**0.1**	**0.2**	**0.3**	**0.4**	**0.5**	**0.6**	**0.7**	**0.8**	**0.9**	**1.0**
Low-Clg Default:	OFF	OFF	OFF	810	735	660	585	505	See Note 4				
Low-Cooling (SW2-5,4,3)	OFF	OFF	ON	585	490	See Note 4							
	OFF	ON	OFF	810	735	660	585	505	See Note 4				
	OFF	ON	ON	1010	945	885	820	760	695	625	565	510	455
	ON	OFF	OFF	1205	1150	1090	1040	985	930	875	820	760	705
	ON	OFF	ON	1400	1345	1295	1245	1200	1155	1105	1060	1005	960
	ON	ON	OFF	1580	1540	1495	1445	1405	1360	1320	1275	1235	1190
	ON	ON	ON	1930	1895	1855	1815	1775	1740	1700	1665	1630	1595
Cont. Fan Default:	OFF	OFF	OFF	810	735	660	585	505	See Note 4				
Continuous Fan (SW2-5,4,3)	OFF	OFF	ON	585	490	See Note 4							
	OFF	ON	OFF	810	735	660	585	505	See Note 4				
	OFF	ON	ON	1010	945	885	820	760	695	625	565	510	455
	ON	OFF	OFF	1205	1150	1090	1040	985	930	875	820	760	705
	ON	OFF	ON	1400	1345	1295	1245	1200	1155	1105	1060	1005	960
	ON	ON	OFF	1400	1345	1295	1245	1200	1155	1105	1060	1005	960
	ON	ON	ON	1400	1345	1295	1245	1200	1155	1105	1060	1005	960
Heating (SW1)	Heat Airflow[3]			1435	1385	1335	1290	1245	1195	1145	1100	1050	1000

Air Delivery - CFM (With Filter)* (Continued)

COOLING[4] AND HEATING AIR DELIVERY - CFM (Bottom Return[5] with Filter)													
(SW1-5 and SW2-2 set to OFF, except as indicated. See Notes 1 and 2.)													
Unit Size: 0902120	**Clg/CF Switch settings**			**External Static Pressure (ESP)**									
Clg Switches:	**SW2-8**	**SW2-7**	**SW2-6**	**0.1**	**0.2**	**0.3**	**0.4**	**0.5**	**0.6**	**0.7**	**0.8**	**0.9**	**1.0**
Clg Default:	OFF	OFF	OFF	1985	1935	1885	1835	1785	1735	1685	1630	1583	1532
Cooling (SW2-8,7,6)	OFF	OFF	ON	860	755	650	545	445	See Note 4				
	OFF	ON	OFF	1085	1000	910	830	735	655	565	485	405	310
	OFF	ON	ON	1255	1180	1105	1025	950	870	790	715	640	570
	ON	OFF	OFF	1425	1355	1290	1220	1150	1085	1015	940	870	800
	ON	OFF	ON	1630	1575	1515	1455	1395	1330	1270	1210	1155	1090
	ON	ON	OFF	1985	1935	1885	1835	1785	1735	1685	1630	1583	1532
	ON	ON	ON	2100	2055	2010	1960	1915	1870	1820	1775	1715	1640
	Maximum Clg Airflow[2]			2100	2055	2010	1960	1915	1870	1820	1775	1715	1640
CF Switches	**SW2-5**	**SW2-4**	**SW2-3**	**0.1**	**0.2**	**0.3**	**0.4**	**0.5**	**0.6**	**0.7**	**0.8**	**0.9**	**1.0**
Low-Cooling (SW2-5,4,3)	OFF	OFF	ON	700	575	See Note 4							
	OFF	ON	OFF	860	755	650	545	445	See Note 4				
	OFF	ON	ON	1085	1000	910	830	735	655	565	485	405	310
	ON	OFF	OFF	1255	1180	1105	1025	950	870	790	715	640	570
	ON	OFF	ON	1425	1355	1290	1220	1150	1085	1015	940	870	800
	ON	ON	OFF	1630	1575	1515	1455	1395	1330	1270	1210	1155	1090
	ON	ON	ON	1985	1935	1885	1835	1785	1735	1685	1630	1583	1532
Cont. Fan Default:	OFF	OFF	OFF	860	755	650	545	445	See Note 4				
Continuous Fan (SW2-5,4,3)	OFF	OFF	ON	700	575	See Note 4							
	OFF	ON	OFF	860	755	650	545	445	See Note 4				
	OFF	ON	ON	1085	1000	910	830	735	655	565	485	405	310
	ON	OFF	OFF	1255	1180	1105	1025	950	870	790	715	640	570
	ON	OFF	ON	1425	1355	1290	1220	1150	1085	1015	940	870	800
	ON	ON	OFF	1630	1575	1515	1455	1395	1330	1270	1210	1155	1090
	ON	ON	ON	1630	1575	1515	1455	1395	1330	1270	1210	1155	1090
Heating (SW1)	Heat Airflow[3]			1830	1775	1725	1675	1625	1570	1520	1465	1410	1360
Unit Size: 0902420	**Clg/CF Switch settings**			**External Static Pressure (ESP**									
Clg Switches:	**SW2-8**	**SW2-7**	**SW2-6**	**0.1**	**0.2**	**0.3**	**0.4**	**0.5**	**0.6**	**0.7**	**0.8**	**0.9**	**1.0**
Clg Default:	OFF	OFF	OFF	1970	1915	1865	1815	1765	1715	1660	1605	1545	1485
Cooling (SW2-8,7,6)	OFF	OFF	ON	980	885	770	675	585	See Note 4				
	OFF	ON	OFF	1115	1030	930	840	755	670	575	510	415	330
	OFF	ON	ON	1280	1205	1130	1045	960	885	810	740	670	595
	ON	OFF	OFF	1450	1380	1315	1250	1165	1090	1020	955	890	825
	ON	OFF	ON	1630	1570	1510	1450	1385	1320	1250	1185	1125	1070
	ON	ON	OFF	1970	1915	1865	1815	1765	1715	1660	1605	1545	1485
	ON	ON	ON	2135	2090	2035	1990	1940	1895	1850	1795	1745	1690
	Maximum Clg Airflow[2]			2175	2125	2080	2030	1980	1935	1890	1840	1795	1735
CF Switches	**SW2-5**	**SW2-4**	**SW2-3**	**0.1**	**0.2**	**0.3**	**0.4**	**0.5**	**0.6**	**0.7**	**0.8**	**0.9**	**1.0**
Low-Clg Default:	OFF	OFF	OFF	980	885	770	675	585	See Note 4				
Low-Cooling (SW2-5,4,3)	OFF	OFF	ON	790	670	See Note 4							
	OFF	ON	OFF	980	885	770	675	585	See Note 4				
	OFF	ON	ON	1115	1030	930	840	755	670	575	510	415	330
	ON	OFF	OFF	1280	1205	1130	1045	960	885	810	740	670	595
	ON	OFF	ON	1450	1380	1315	1250	1165	1090	1020	955	890	825
	ON	ON	OFF	1630	1570	1510	1450	1385	1320	1250	1185	1125	1070
	ON	ON	ON	1970	1915	1865	1815	1765	1715	1660	1605	1545	1485
Cont. Fan Default:	OFF	OFF	OFF	980	885	770	675	585	See Note 4				
Continuous Fan (SW2-5,4,3)	OFF	OFF	ON	790	670	See Note 4							
	OFF	ON	OFF	980	885	770	675	585	See Note 4				
	OFF	ON	ON	1115	1030	930	840	755	670	575	510	415	330
	ON	OFF	OFF	1280	1205	1130	1045	960	885	810	740	670	595
	ON	OFF	ON	1450	1380	1315	1250	1165	1090	1020	955	890	825
	ON	ON	OFF	1630	1570	1510	1450	1385	1320	1250	1185	1125	1070
	ON	ON	ON	1630	1570	1510	1450	1385	1320	1250	1185	1125	1070
Heating (SW1)	Heat Airflow[3]			1740	1680	1625	1570	1510	1445	1385	1325	1265	1205

Air Delivery - CFM (With Filter)* (Continued)

COOLING[4] AND HEATING AIR DELIVERY - CFM (Bottom Return[5] with Filter)													
(SW1-5 and SW2-2 set to OFF, except as indicated. See Notes 1 and 2.)													
Unit Size:1102422	**Clg/CF Switch settings**			**External Static Pressure (ESP)**									
Clg Switches:	**SW2-8**	**SW2-7**	**SW2-6**	**0.1**	**0.2**	**0.3**	**0.4**	**0.5**	**0.6**	**0.7**	**0.8**	**0.9**	**1.0**
Clg Default:	OFF	OFF	OFF	2040	1980	1920	1865	1805	1750	1700	1640	1575	1525
Cooling (SW2-8,7,6)	OFF	OFF	ON	910	795	690	580	495	See Note 4				
	OFF	ON	OFF	1140	1050	955	865	775	See Note 4				
	OFF	ON	ON	1305	1220	1140	1055	975	895	815	745	680	605
	ON	OFF	OFF	1480	1405	1325	1255	1180	1105	1035	975	895	830
	ON	OFF	ON	1680	1610	1540	1475	1415	1345	1275	1215	1150	1095
	ON	ON	OFF	2040	1980	1920	1865	1805	1750	1700	1640	1575	1525
	ON	ON	ON	2280	2230	2175	2125	2075	2025	1980	1930	1880	1830
	Maximum Clg Airflow[2]			2485	2430	2380	2330	2280	2230	2185	2140	2090	2030
CF Switches	**SW2-5**	**SW2-4**	**SW2-3**	**0.1**	**0.2**	**0.3**	**0.4**	**0.5**	**0.6**	**0.7**	**0.8**	**0.9**	**1.0**
Low-Clg Default:	OFF	OFF	OFF	910	795	690	580	495	See Note 4				
Low-Cooling (SW2-5,4,3)	OFF	OFF	ON	730	665	See Note 4							
	OFF	ON	OFF	910	795	690	580	495	See Note 4				
	OFF	ON	ON	1140	1050	955	865	775	See Note 4				
	ON	OFF	OFF	1305	1220	1140	1055	975	895	815	745	680	605
	ON	OFF	ON	1480	1405	1325	1255	1180	1105	1035	975	895	830
	ON	ON	OFF	1680	1610	1540	1475	1415	1345	1275	1215	1150	1095
	ON	ON	ON	2040	1980	1920	1865	1805	1750	1700	1640	1575	1525
Cont. Fan Default:	OFF	OFF	OFF	910	795	690	580	495	See Note 4				
Continuous Fan (SW2-5,4,3)	OFF	OFF	ON	730	665	See Note 4							
	OFF	ON	OFF	910	795	690	580	495	See Note 4				
	OFF	ON	ON	1140	1050	955	865	775	See Note 4				
	ON	OFF	OFF	1305	1220	1140	1055	975	895	815	745	680	605
	ON	OFF	ON	1480	1405	1325	1255	1180	1105	1035	975	895	830
	ON	ON	OFF	1480	1405	1325	1255	1180	1105	1035	975	895	830
	ON	ON	ON	1480	1405	1325	1255	1180	1105	1035	975	895	830
Heating (SW1)	Heat Airflow[3]			2120	2065	2005	1950	1895	1845	1790	1735	1680	1625

1. Nominal 350 CFM/ton cooling airflow is delivered with SW1-5 and SW2-2 set to OFF.
   Set both SW1-5 and SW2-2 to ON for +7% airflow (nominal 370 CFM/ton).
   Set SW1-5 to ON and SW2-2 to OFF for +15% airflow (nominal 400 CFM/ton).
   Set SW2-2 to ON and SW1-5 to OFF for -7% airflow (nominal 325 CFM/ton).
   The above adjustments in airflow are subject to motor horsepower range/capacity.
   This applies to Cooling and Low-Cooling airflow, but does not affect continuous fan airflow.
2. Maximum cooling airflow is achieved when switches SW2-6, SW2-7, SW2-8 and SW1-5 are set to ON, and SW2-2 is set to OFF.
3. All heating CFM's are when comfort/efficiency adjustment switch (SW1-4) is set to OFF
4. Ductwork must be sized for heating CFM within the operational range of ESP. Operation within blank areas of the chart is not recommended because heat operation will be above 1.0 ESP.
5. All airflows on 21" casing size furnaces are 5% less on side return only installations.
6. Side returns for 24.5" casing sizes require two sides, or side and bottom, to allow sufficient airflow at the return of the furnace.
7. Airflows over 1800 CFM require bottom return, two-side return, or bottom and side return or excessive watt draw may result. A minimum filter size of 20x25" (508 x 635 mm) is required.

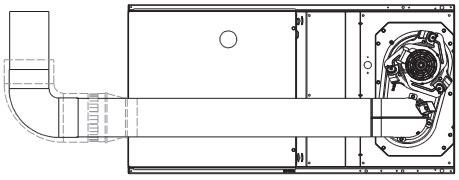

SEE NOTES: 1,2,4,5,7,8,9

HORIZONTAL RIGHT

A02068

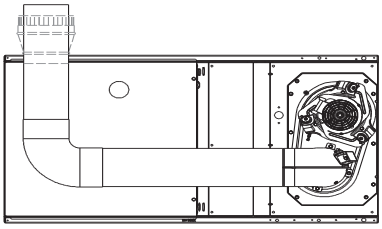

SEE NOTES: 1,2,4,5,7,8,9

HORIZONTAL RIGHT

A02070

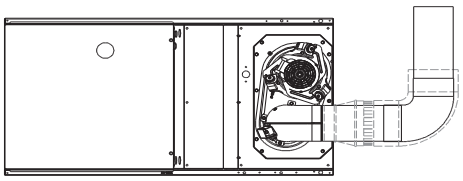

SEE NOTES: 1,2,4,7,8,9

HORIZONTAL RIGHT

A02069

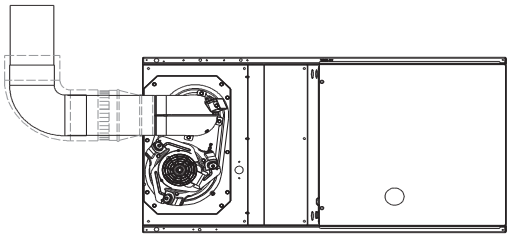

SEE NOTES: 1,2,4,7,8,9

HORIZONTAL LEFT

A02064

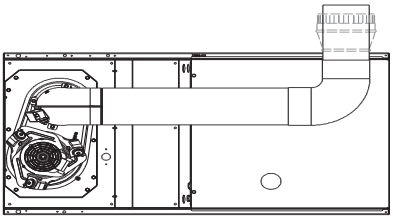

SEE NOTES: 1,2,4,5,7,8,9

HORIZONTAL LEFT

A02065

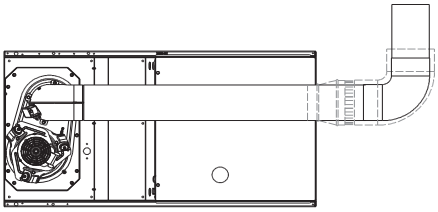

SEE NOTES: 1,2,4,5,7,8,9

HORIZONTAL LEFT

A02067

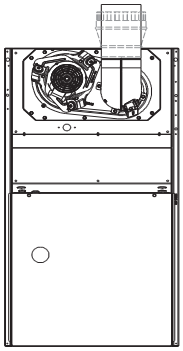

SEE NOTES: 1,2,4,7,8,9

UPFLOW

A02058

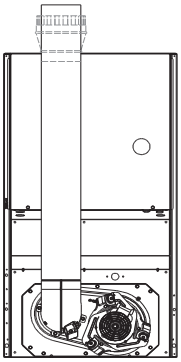

SEE NOTES: 1,2,4,5,7,8,9

DOWNFLOW

A02061

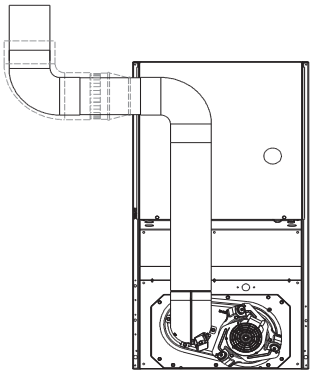

SEE NOTES:1,2,3,4,5,7,8,9

DOWNFLOW

A02060

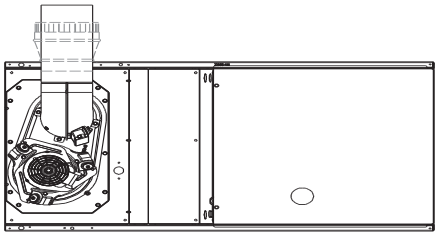

SEE NOTES: 1,2,4,5,7,8,9

HORIZONTAL LEFT

A02066

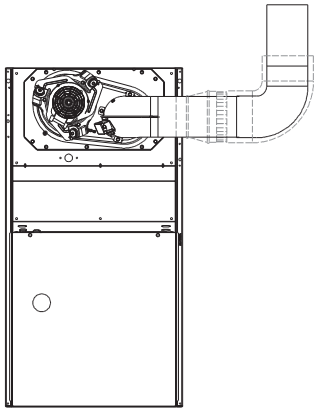

SEE NOTES: 1,2,3,4,7,8,9

UPFLOW

A02059

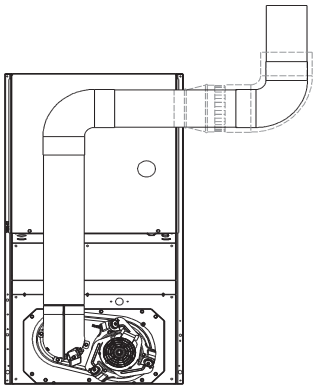

SEE NOTES: 1,2,3,4,7,8,9

DOWNFLOW

A02063

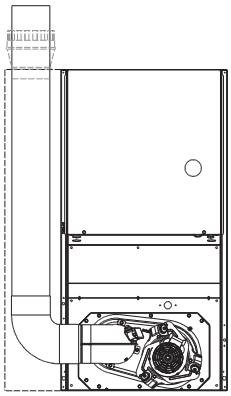

SEE NOTES: 1,2,4,5,6,7,8,9

DOWNFLOW

A02062

VENTING NOTES

1. For common vent, vent connector sizing and vent material: United States, latest edition of the National Fuel Gas Code (NFGC), ANSI Z223.1/NFPA 54.
2. Immediately increase to 5-in. (127 mm) vent connector outside furnace casing when 5-in. (127 mm) vent connector required, refer to Note 1.
3. Side outlet vent for upflow and downflow installations must use Type B vent immediately after exiting the furnace, except when Downflow Vent Guard is used in downflow position.
4. Type B vent where required, refer to Note 1.
5. 4-in. (102 mm) single wall vent must be used inside furnace casing and the Downflow Vent Guard Kit.
6. Accessory Downflow Vent Guard Kit required in downflow installations with bottom vent configuration.
7. Chimney Adapter Kit required for exterior masonry chimney applications. Refer to Chimney Adapter Kits for sizing and complete application details.
8. Secure vent connector to furnace elbow with (2) corrosion-resistant sheet metal screws, space approximately 180 apart.
9. Secure all other single wall vent connector joints with (3) corrosion-resistant screws spaced approximately 120 apart. Secure Type B vent connectors per vent connector manufacturer's recommendations.

ACCESSORIES

DESCRIPTION	PART NO.	0451412	0451716	0701716	0702120	0902120	0902420	1102422
Bottom Filter Rack, 14 inch*	FHG1425-2	X						
Bottom Filter Rack, 16 inch*	FHG1625-2		X	X				
Bottom Filter Rack, 21 inch*	FHG2025-2				X	X		
Bottom Filter Rack, 24 inch	FHG2424-2*						X	X
Washable filter, 3/4-in. x 16 x 25	325531-402*	X	X	X				
Washable filter, 3/4-in. x 21 x 25	325531-403*				X	X		
Washable filter, 3/4-in. x 24 x 25	325531-404*						X	X
Combustible Floor Base (Not required when evaporator coil case is used for downflow)	NAHA01101SB	X	X	X	X	X	X	X
Downflow Vent Guard (Not required when vent is routed through cabinet)	NAHB00301VC	X	X	X	X	X	X	X
Chimney Adapter Kit 4-in. vent	NAHA00401DH	X	X	X	X	X	X	X
Chimney Adapter Kit 5-in. vent	NAHA00301DH						X	X
Natural-to-Propane Conversion Kit†	AGAGC8NPS01A	X	X	X	X	X	X	X
Propane-to-Natural Conversion Kit†	AGAGC8PNS01A	X	X	X	X	X	X	X

*. Purchase through FAST Parts
†. Factory authorized and field installed. Gas conversion kits are CSA recognized.
X Accessory available

© 2020 Carrier. All rights reserved.

Manufacturer reserves the right to change, at any time, specifications and designs without notice and without obligations.