TECHNICAL SUPPORT MANUAL
Fan Coils
FSM2X, FSM4X

Safety Labeling and Signal Words

DANGER, WARNING, CAUTION, and NOTE

The signal words **DANGER, WARNING, CAUTION,** and **NOTE** are used to identify levels of hazard seriousness. The signal word **DANGER** is only used on product labels to signify an immediate hazard. The signal words **WARNING, CAUTION,** and **NOTE** will be used on product labels and throughout this manual and other manuals that may apply to the product.

DANGER – Immediate hazards which **will** result in severe personal injury or death.

WARNING – Hazards or unsafe practices which **could** result in severe personal injury or death.

CAUTION – Hazards or unsafe practices which **may** result in minor personal injury or product or property damage.

NOTE – Used to highlight suggestions which **will** result in enhanced installation, reliability, or operation.

Signal Words in Manuals

The signal word **WARNING** is used throughout this manual in the following manner:

⚠ WARNING

The signal word **CAUTION** is used throughout this manual in the following manner:

⚠ CAUTION

Signal Words on Product Labeling

Signal words are used in combination with colors and/or pictures on product labels.

TABLE OF CONTENTS

Wiring Diagram 2
Exploded Drawings . . . . . 3 – 6
Parts List . . . . . 7 – 11
Airflow Charts . . . . . 12 – 13
Model Number Identification 14

⚠ WARNING

ELECTRICAL SHOCK HAZARD

Failure to turn off electric power could result in personal injury or death.

Before installing or servicing system, turn off main power to the system. There may be more than one disconnect switch, including accessory heater(s).

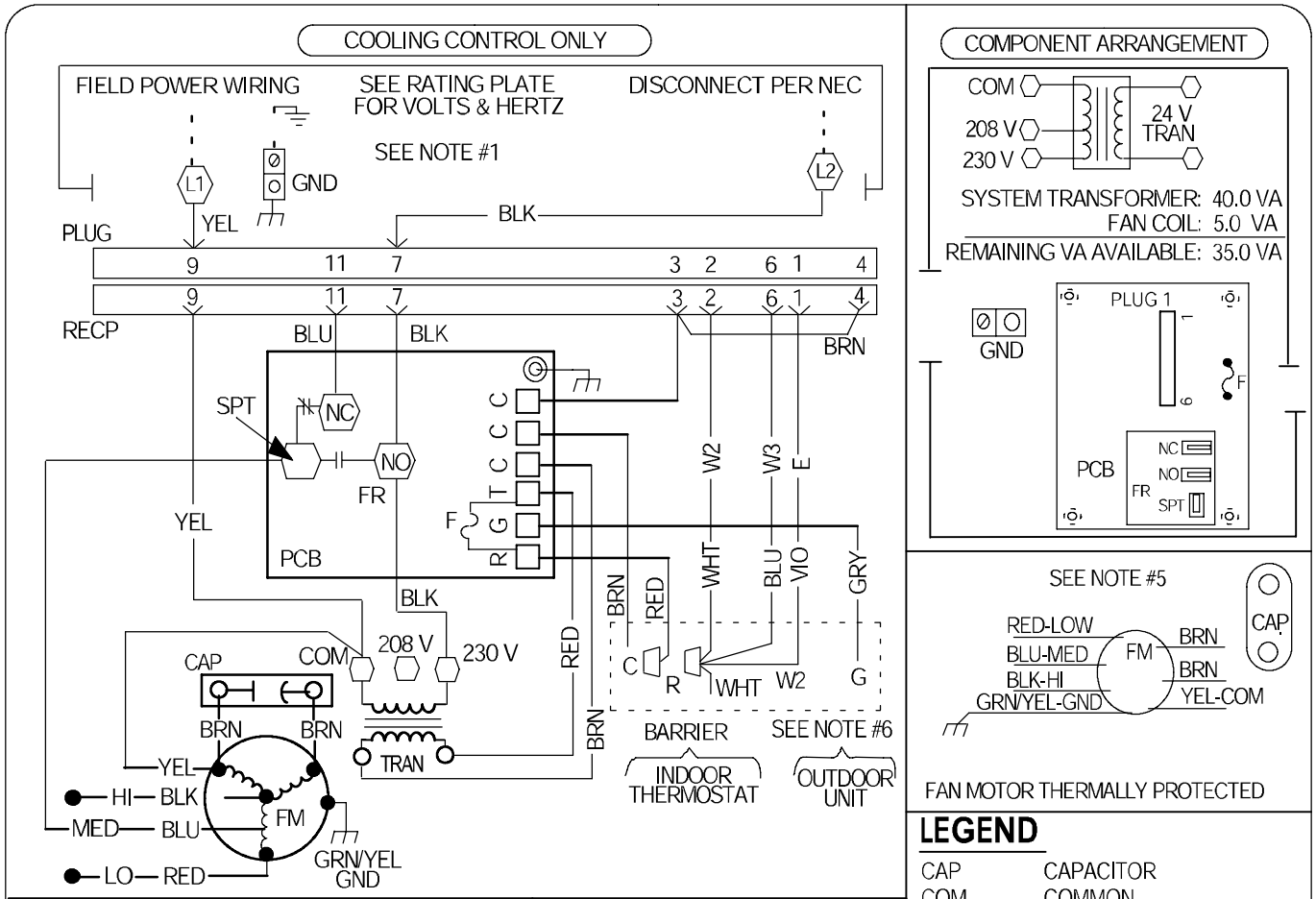

Minimum Motor Speed Tap Selection For Electric Heater

MODEL SIZE	HEATER SIZE KW						
	3,5,8	9	10	15	18	20	24, 30
18	MED *	-----	HI	-----	-----	-----	-----
24	MED‡	-----	MED‡	MED‡	-----	-----	-----
30	-----	-----	LO	LO	-----	MED *	-----
36,42, 48, 60	-----	LO	LO	LO	LO	LO	LO
70	-----	MED	MED	MED	MED	MED	MED

* - MED speed on 3 speed motors and HI speed on 2 speed motors.
‡ - MED speed on 3 speed motors and LO speed on 2 speed motors.

NOTES

1. Use Copper Wire (75ºC Min) Only Between Disconnect Switch And Unit.
2. To Be Wired In Accordance With NEC And Local Codes.
3. If Any Of The Original Wire, As Supplied, Must Be Replaced, Use The Same Or Equivalent Type Wire.
4. Replace Low Voltage Fuse With No Greater Than 5 Amp Fuse.
5. (3) Speed Motor Shown Optional (2) Speed Motor Uses HI (BLK) And LOW (BLUE or RED).
6. Connect R To R, G To G, Etc. See Outdoor Instruction For Details.

LEGEND

CAP	CAPACITOR
COM	COMMON
F	LOW VOLTAGE FUSE
FR	PCB FAN RELAY
FM	FAN MOTOR
GND	EQUIPMENT GROUND
PCB	PRINTED CIRCUIT BOARD
RECP	RECEPTACLE
SPT	FAN SPEED TAP LOCATION
TRAN	TRANSFORMER
○	UNMARKED TERMINAL
- - - -	FIELD POWER WIRING
⬡	MARKED TERMINAL
—>>—	PLUG AND RECEPTACLE

328964-101 REV. A

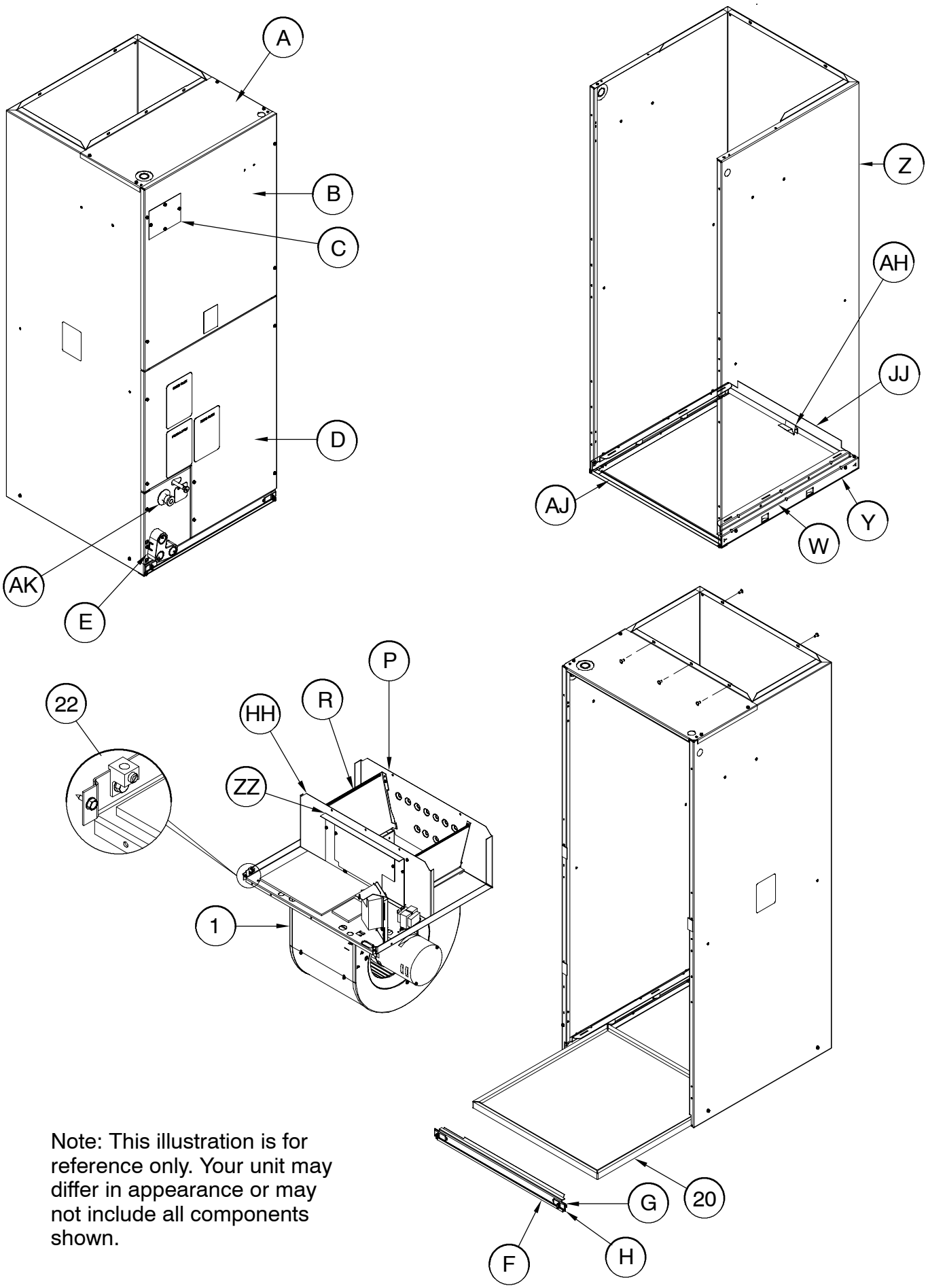

Note: This illustration is for reference only. Your unit may differ in appearance or may not include all components shown.

Note: This illustration is for reference only. Your unit may differ in appearance or may not include all components shown.

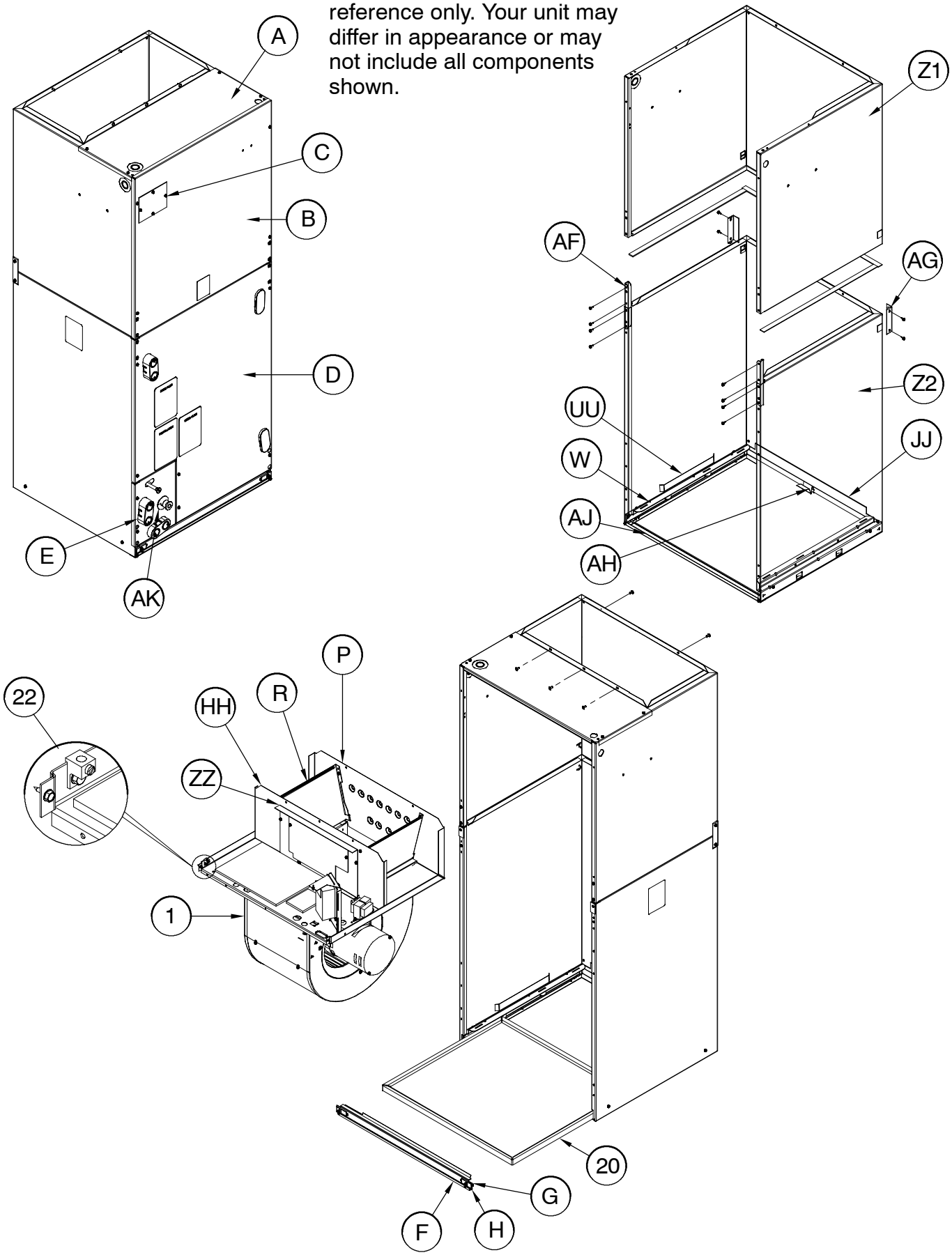

Note: This illustration is for reference only. Your unit may differ in appearance or may not include all components shown.

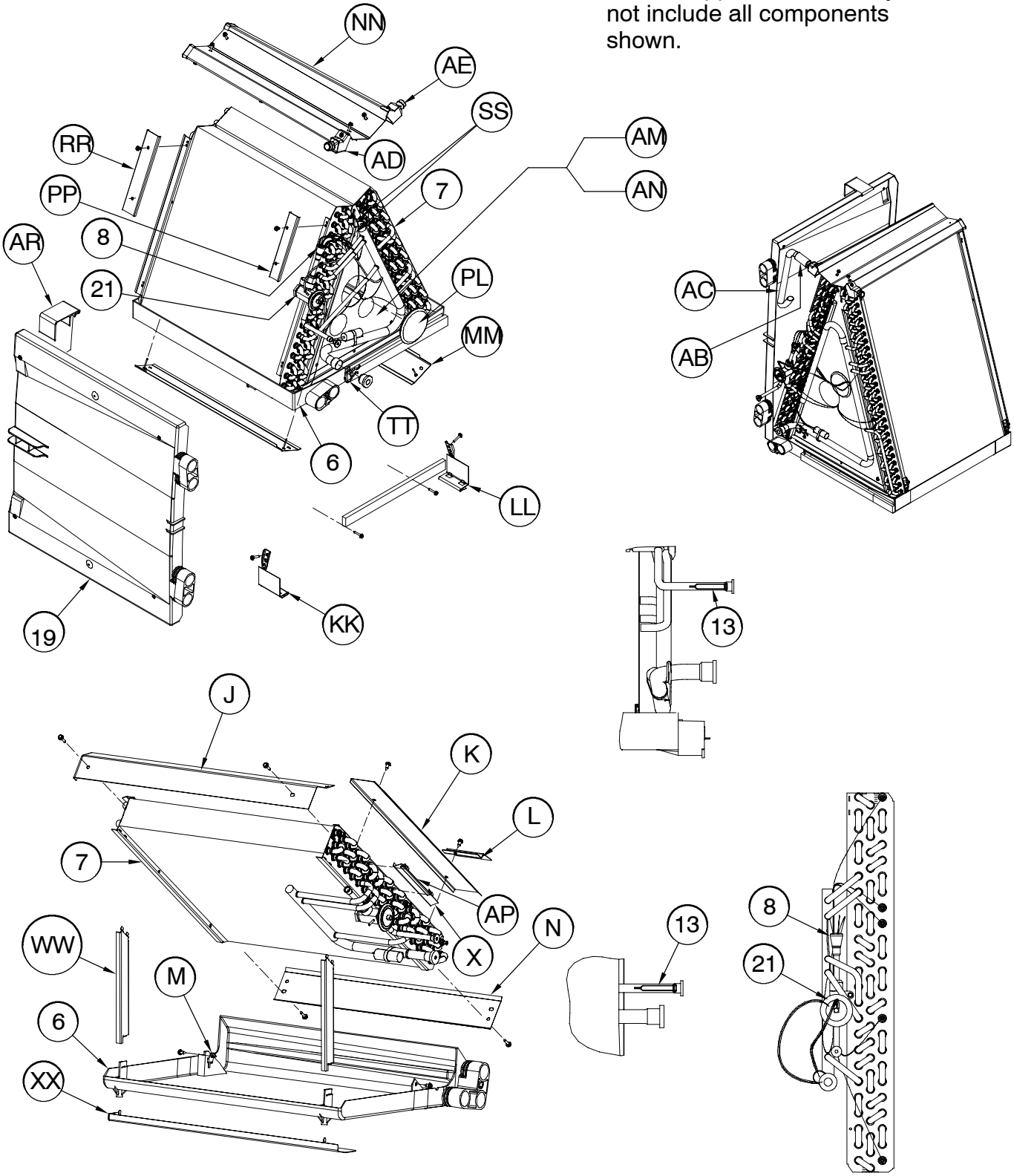

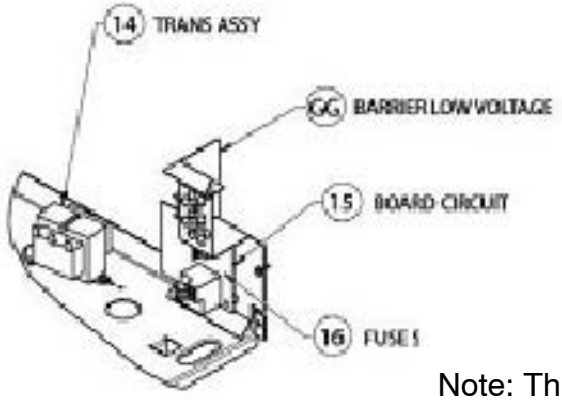

Note: This illustration is for reference only. Your unit may differ in appearance or may not include all components shown.

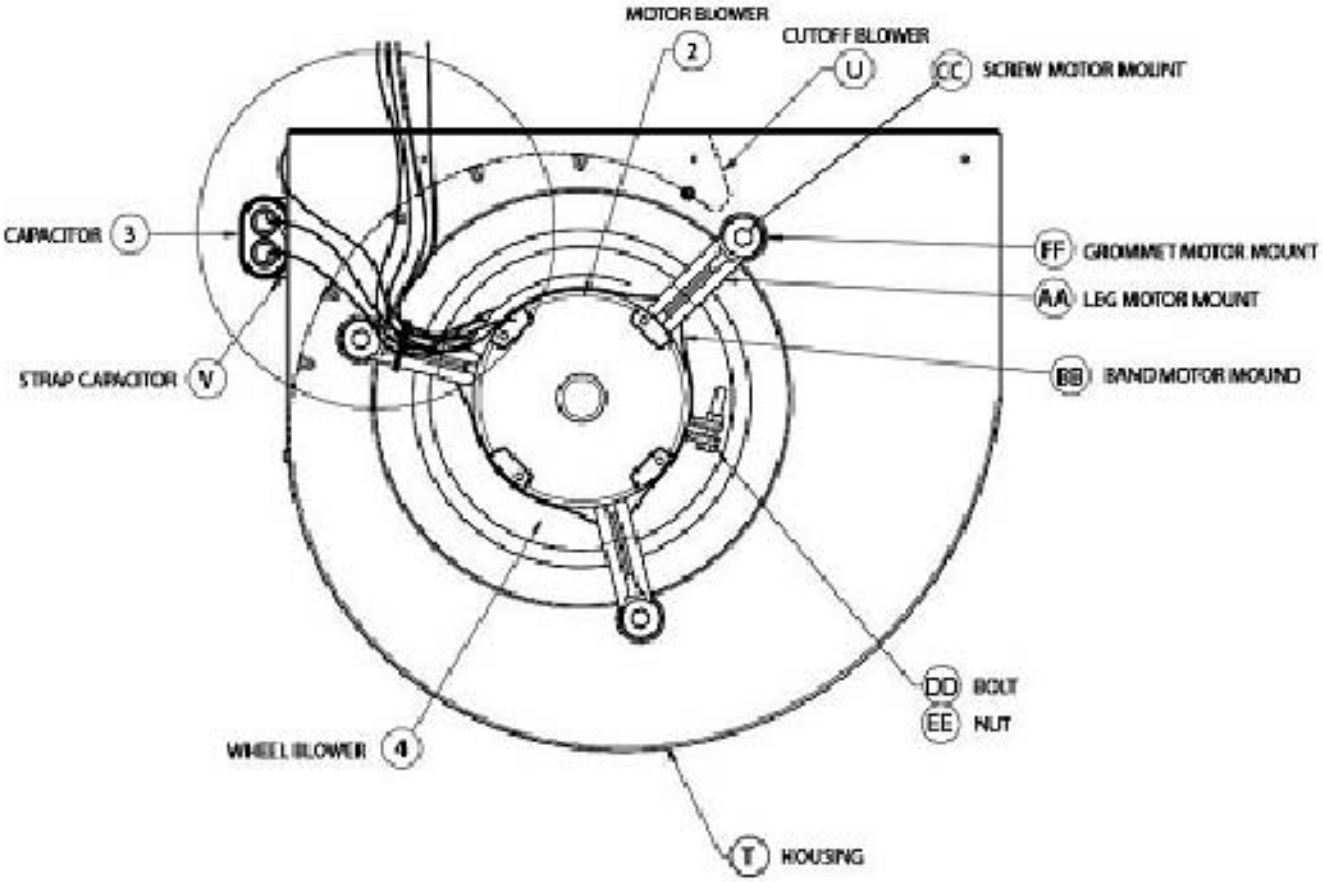

FSM2X and FSM4X PARTS LIST																	
KEY NO.	DESCRIPTION	PART NO.	FSM2X1800A1	FSM4X1800A1	FSM2X2400A1	FSM4X2400A1	FSM2X3000A1	FSM4X3000A1	FSM2X3600A1	FSM4X3600A1	FSM2X4200A1	FSM4X4200A1	FSM2X4800A1	FSM4X4800A1	FSM2X6000A1	FSM4X6000A1
1	Blower Assembly DD9–6	1173792	1	1	–	–	–	–	–	–	–	–	–	–	–	–
1	Blower Assembly DD9–6	1172622	1	1	1	1	–	–	–	–	–	–	–	–	–	–
1	DD9–7	1171613	–	–	–	–	1	1	–	–	–	–	–	–	–	–
1	DD10–7	1171616	–	–	–	–	–	–	1	1	–	–	–	–	–	–
1	DD10–9	1171614	–	–	–	–	–	–	–	–	1	1	–	–	–	–
1		1171618	–	–	–	–	–	–	–	–	–	–	1	1	–	–
1		1171617	–	–	–	–	–	–	–	–	–	–	–	–	1	1
2	Motor, Blower 1/4 HP	1171766	1	1	1	1	–	–	–	–	–	–	–	–	–	–
2	1/3 HP	1171723	–	–	–	–	1	1	–	–	–	–	–	–	–	–
2		1171720	–	–	–	–	–	–	1	1	–	–	–	–	–	–
2	1/2 HP	1171722	–	–	–	–	–	–	–	–	1	1	–	–	–	–
2	3/4 HP	1171724	–	–	–	–	–	–	–	–	–	–	1	1	–	–
2		1171725	–	–	–	–	–	–	–	–	–	–	–	–	1	1
3	Capacitor 7.5 mfd 370 Volts	1171728	1	1	1	1										
3	10 mfd 370 Volts	1171729	–	–	–	–	1	1	–	–	1	1				
3	15 mfd 370 Volts	1171730	–	–	–	–	–	–	1	1	–	–	1	1	1	1
4	Wheel, Blower DD9–6	1171743	1	1	1	1	–	–	–	–	–	–	–	–	–	–
4	DD9–7	1171744	–	–	–	–	1	1	–	–	–	–	–	–	–	–
4	DD10–7	1171745	–	–	–	–	–	–	1	1	–	–	–	–	–	–
4	DD10–9	1171741	–	–	–	–	–	–	–	–	1	1	1	1	1	1
6	Pan, Drain Vertical/Horizontal	1171661	1	1	–	–	–	–	–	–	–	–	–	–	–	–
6		1171662	–	–	1	1	1	1	–	–	–	–	–	–	–	–
6	Pan, Drain Vertical	1171576	–	–	–	–	–	–	1	1	1	1	1	1	–	–
6		1171577	–	–	–	–	–	–	–	–	–	–	–	–	1	1
7	Coil & Header Assembly	1172976	1	–	–	–	–	–	–	–	–	–	–	–	–	–
7		1173765	–	1	–	–	–	–	–	–	–	–	–	–	–	–
7		1172977	–	–	1	–	–	–	–	–	–	–	–	–	–	–
7		1172330	–	–	–	1	–	–	–	–	–	–	–	–	–	–
7		1172979	–	–	–	–	1	–	–	–	–	–	–	–	–	–
7		1173766	–	–	–	–	–	1	–	–	–	–	–	–	–	–
7		1172978	–	–	–	–	–	–	1	–	1	–	–	–	–	–
7		1173768	–	–	–	–	–	–	–	1	–	1	–	–	–	–
7		1172980	–	–	–	–	–	–	–	–	–	–	1	–	–	–
7		1172333	–	–	–	–	–	–	–	–	–	–	–	1	–	–
7		1172868	–	–	–	–	–	–	–	–	–	–	–	–	1	–
7		1172332	–	–	–	–	–	–	–	–	–	–	–	–	–	1
8	Distributor Assembly	1172624	1	1	–	–	–	–	–	–	–	–	–	–	–	–
8		1171603	–	–	1	1	–	1	–	–	–	–	–	–	–	–

– continued on next page –

FSM2X and FSM4X PARTS LIST (continued)																
KEY NO.	DESCRIPTION	PART NO.	FSM2X1800A1	FSM4X1800A1	FSM2X2400A1	FSM4X2400A1	FSM2X3000A1	FSM4X3000A1	FSM2X3600A1	FSM4X3600A1	FSM2X4200A1	FSM4X4200A1	FSM2X4800A1	FSM4X4800A1	FSM2X6000A1	FSM4X6000A1
8		1172984	–	–	–	–	1	–	–	–	–	–	–	–	–	–
8		1172983	–	–	–	–	–	–	1	1	1	1	1	–	–	–
8		1171606	–	–	–	–	–	–	–	–	–	–	–	1	–	–
8		1171605	–	–	–	–	–	–	–	–	–	–	–	–	1	1
13	Strainer	1171740	1	–	1	–	1	–	1	–	1	–	1	–	1	–
14	Transformer	1172028	1	1	1	1	1	1	1	1	1	1	1	1	1	1
15	Board, Fan Control Circuit	1171734	1	1	1	1	1	1	1	1	1	1	1	1	1	1
16	Fuse, Circuit Board	1171735	1	1	1	1	1	1	1	1	1	1	1	1	1	1
17	Harness Assembly	1171676	1	1	1	1	1	1	1	1	1	1	1	1	1	1
20	Filter 13–1/16” x 21–9/16”	1172070	1	1	–	–	–	–	–	–	–	–	–	–	–	–
20	16–3/8” x 21–9/16”	1171652	–	–	1	1	1	1	–	–	–	–	–	–	–	–
20	19–15/16” x 21–9/16”	1171653	–	–	–	–	–	–	1	1	1	1	1	1	–	–
20	23–7/16” x 21–9/16”	1171654	–	–	–	–	–	–	–	–	–	–	–	–	1	1
21	Valve, Expansion	1172864	1	–	1	–	1	–	–	–	–	–	–	–	–	–
21		1172348	–	1	–	1	–	1	–	–	–	–	–	–	–	–
21		1172349	–	–	–	–	–	–	–	1	–	1	–	–	–	–
21		1172866	–	–	–	–	–	–	1	–	1	–	1	–	–	–
21		1172350	–	–	–	–	–	–	–	–	–	–	–	1	–	1
21		1172869	–	–	–	–	–	–	–	–	–	–	–	–	1	–
22	Lug, Ground	1170677	1	1	1	1	1	1	1	1	1	1	1	1	1	1
)(	Harness Assembly, Unit	1171698	1	1	1	1	1	1	1	1	1	1	1	1	1	1
A	Panel, Top	1172360	1	1	–	–	–	–	–	–	–	–	–	–	–	–
A		1172334	–	–	1	1	1	1	–	–	–	–	–	–	–	–
A		1172363	–	–	–	–	–	–	1	1	1	1	–	–	–	–
A		1172335	–	–	–	–	–	–	–	–	–	–	1	1	–	–
A		1172336	–	–	–	–	–	–	–	–	–	–	–	–	1	1
B	Door, Upper	1172373	1	1	–	–	–	–	–	–	–	–	–	–	–	–
B		1172345	–	–	1	1	1	1	–	–	–	–	–	–	–	–
B		1172375	–	–	–	–	–	–	1	1	1	1	–	–	–	–
B		1173796	–	–	–	–	–	–	–	–	–	–	1	1	–	–
B		1172347	–	–	–	–	–	–	–	–	–	–	–	–	1	1
C	Cover, Disconnect	1171949	1	1	1	1	1	1	1	1	1	1	1	1	1	1
D	Door, Lower	1172366	1	1	–	–	–	–	–	–	–	–	–	–	–	–
D		1172343	–	–	1	1	1	1	–	–	–	–	–	–	–	–
D		1172368	–	–	–	–	–	–	1	1	1	1	–	–	–	–
D		1173795	–	–	–	–	–	–	–	–	–	–	1	1	–	–
D		1172342	–	–	–	–	–	–	–	–	–	–	–	–	1	1
E	Door, Fitting	1172365	1	–	1	–	1	–	1	–	–	–	–	–	–	–

– continued on next page –

FSM2X and FSM4X PARTS LIST (continued)																	
KEY NO.	DESCRIPTION	PART NO.	FSM2X1800A1	FSM4X1800A1	FSM2X2400A1	FSM4X2400A1	FSM2X3000A1	FSM4X3000A1	FSM2X3600A1	FSM4X3600A1	FSM2X4200A1	FSM4X4200A1	FSM2X4800A1	FSM4X4800A1	FSM2X6000A1	FSM4X6000A1
E		1172339	–	1	–	1	–	1	–	–	–	–	–	–	–	–
E		1172372	–	–	–	–	–	–	–	–	1	–	1	–	1	–
E		1172344	–	–	–	–	–	–	–	1	–	1	–	1	–	1
F	Door, Filter	1172043	1	1	–	–	–	–	–	–	–	–	–	–	–	–
F		1171934	–	–	1	1	1	1	–	–	–	–	–	–	–	–
F		1171935	–	–	–	–	–	–	1	1	1	1	1	1	–	–
F		1171936	–	–	–	–	–	–	–	–	–	–	–	–	1	1
G	Latch, Filter Door	1171573	2	2	2	2	2	2	2	2	2	2	2	2	2	2
H	Nut, Filter Door	1171714	2	2	2	2	2	2	2	2	2	2	2	2	2	2
J	Bracket, Coil	1171651	1	1	1	1	1	1	–	–	–	–	–	–	–	–
K	Extension, Coil	1171578	1	1	–	–	–	–	–	–	–	–	–	–	–	–
K		1171579	–	–	1	1	1	1	–	–	–	–	–	–	–	–
L	Baffle, Coil	1171644	1	1	1	1	1	1	–	–	–	–	–	–	–	–
M	Bracket, Coil Rear	1171630	1	1	1	1	1	1	–	–	–	–	–	–	–	–
N	Shield, Drain Pan	1172328	1	1	1	1	1	1	–	–	–	–	–	–	–	–
P	Deck, Blower	1171585	1	1	–	–	–	–	–	–	–	–	–	–	–	–
P		1172981	–	–	1	1	–	–	–	–	–	–	–	–	–	–
P		1171586	–	–	–	–	1	1	–	–	–	–	–	–	–	–
P		1171588	–	–	–	–	–	–	1	1	1	1	1	1	–	–
P		1171589	–	–	–	–	–	–	–	–	–	–	–	–	1	1
R	Baffle, Diffuser	1171569	2	2	2	2	2	2	2	2	2	2	2	2	2	2
S	Bracket, Housing	1171590	1	1	1	1	–	–	–	–	–	–	–	–	–	–
S		1171591	–	–			1	1	–	–	–	–	–	–	–	–
S		1171592	–	–	–	–	–	–	1	1	1	1	1	1	1	1
T	Housing & Wheel Assembly	1171597	1	1	1	1	–	–	–	–	–	–	–	–	–	–
T		1171598	–	–	–	–	1	1	–	–	–	–	–	–	–	–
T		1171599	–	–	–	–	–	–	1	1	–	–	–	–	–	–
T		1171600	–	–	–	–	–	–	–	–	1	1	1	1	1	1
U	Cutoff, Blower	1171570	1	1	1	1	–	–	–	–	–	–	–	–	–	–
U		1171571	–	–	–	–	1	1	–	–	–	–	–	–	–	–
U		1171567	–	–	–	–	–	–	1	1	–	–	–	–	–	–
U		1171568	–	–	–	–	–	–			1	1	1	1	1	1
V	Strap, Capacitor	1171694	1	1	1	1	1	1	1	1	1	1	1	1	1	1
W	Support, Side Coil	1171609	1	1	1	1	1	1	2	2	2	2	2	2	2	2
X	Channel, Condensate	1171645	1	1	1	1	1	1	–	–	–	–	–	–	–	–
Y	Bracket, Filter	1171655	1	1	–	–	–	–	–	–	–	–	–	–	–	–
Y		1171656	–	–	1	1	1	1	–	–	–	–	–	–	–	–
Z	Wrapper	1172045	1	1	–	–	–	–	–	–	–	–	–	–	–	–

– continued on next page –

FSM2X and FSM4X PARTS LIST (continued)																
KEY NO.	DESCRIPTION	PART NO.	FSM2X1800A1	FSM4X1800A1	FSM2X2400A1	FSM4X2400A1	FSM2X3000A1	FSM4X3000A1	FSM2X3600A1	FSM4X3600A1	FSM2X4200A1	FSM4X4200A1	FSM2X4800A1	FSM4X4800A1	FSM2X6000A1	FSM4X6000A1
Z		1172046	–	–	1	1	1	1	–	–	–	–	–	–	–	–
Z		1172048	–	–	–	–	–	–	1	1	1	1	–	–	–	–
Z1	Wrapper, Upper	1173811	–	–	–	–	–	–	–	–	–	–	1	1	–	–
Z1		1171952	–	–	–	–	–	–	–	–	–	–	–	–	1	1
Z2	Wrapper, Lower	1173810	–	–	–	–	–	–	–	–	–	–	1	1	–	–
Z2		1171953	–	–	–	–	–	–	–	–	–	–	–	–	1	1
AA	Leg & Grommet, Motor Mount	1173747	3	3	3	3	3	3	–	–	–	–	–	–	–	–
AA		1173746	–	–	–	–	–	–	3	3	3	3	3	3	3	3
AB	Tube, Drain	1172337	–	–	–	–	–	–	1	1	1	1	1	1	1	1
AC	Tube, Drain	1172338	–	–	–	–	–	–	1	1	1	1	1	1	1	1
AD	Fitting, Drain	1171635	–	–	–	–	–	–	1	1	1	1	1	1	1	1
AE	Fitting, Drain	1171636	–	–	–	–	–	–	1	1	1	1	1	1	1	1
AF	Bracket, Front	1171595	–	–	–	–	–	–	–	–	–	–	2	2	2	2
AG	Bracket, Rear	1171954	–	–	–	–	–	–	–	–	–	–	2	2	2	2
AH	Spring, Filter	1172554	1	1	1	1	1	1	1	1	1	1	1	1	1	1
AJ	Angle Tie	1173742	1	1	–	–	–	–	–	–	–	–	–	–	–	–
AJ		1173743	–	–	1	1	1	1	–	–	–	–	–	–	–	–
AJ		1173744	–	–	–	–	–	–	1	1	1	1	1	1	–	–
AJ		1173745	–	–	–	–	–	–	–	–	–	–	–	–	1	1
AK	Grommet, Suction	1171622	1	–	1	1	1	1	1	1	1	1	1	1	1	1
AK		1172083	–	1	–	–	–	–	–	–	–	–	–	–	–	–
AL	Plug, Button	1173764	–	–	–	–	–	–	1	1	1	1	1	1	1	1
AM	Plate Delta Front	1173757	–	–	–	–	–	–	1	1	1	1	–	–	–	–
AM		1173758	–	–	–	–	–	–	–	–	–	–	1	1	–	–
AM		1173759	–	–	–	–	–	–	–	–	–	–	–	–	1	1
AN	Plate Delta Rear	1173760	–	–	–	–	–	–	1	1	1	1	–	–	–	–
AN		1173761	–	–	–	–	–	–	–	–	–	–	1	1	–	–
AN		1173762	–	–	–	–	–	–	–	–	–	–	–	–	1	1
AP	Guard, Edge	1173749	1	1	1	1	1	1	–	–	–	–	–	–	–	–
BB	Band, Motor Mount	1171733	1	1	1	1	1	1	1	1	1	1	1	1	1	1
CC	Screw, Motor Mount	1170636	3	3	3	3	3	3	3	3	3	3	3	3	3	3
DD	Bolt, Motor Mount	1171713	1	1	1	1	1	1	1	1	1	1	1	1	1	1
EE	Nut, Motor Mount	1171736	1	1	1	1	1	1	1	1	1	1	1	1	1	1
FF	Grommet, Motor Mount	1171565	3	3	3	3	3	3	3	3	3	3	3	3	3	3
GG	Barrier, Low Voltage	1171660	1	1	1	1	1	1	1	1	1	1	1	1	1	1
HH	Plate, Heater	1171583	1	1	–	–	–	–	–	–	–	–	–	–	–	–
HH		1171584	–	–	1	1	1	1	–	–	–	–	–	–	–	–
HH		1171581	–	–	–	–	–	–	1	1	1	1	1	1	–	–

– continued on next page –

FSM2X and FSM4X PARTS LIST (continued)																	
KEY NO.	DESCRIPTION	PART NO.	FSM2X1800A1	FSM4X1800A1	FSM2X2400A1	FSM4X2400A1	FSM2X3000A1	FSM4X3000A1	FSM2X3600A1	FSM4X3600A1	FSM2X4200A1	FSM4X4200A1	FSM2X4800A1	FSM4X4800A1	FSM2X6000A1	FSM4X6000A1
HH		1171582	–	–	–	–	–	–	–	–	–	–	–	–	1	1
JJ	Support, Coil Rear	1171607	–	–	–	–	–	–	1	1	1	1	1	1	–	–
JJ		1171608	–	–	–	–	–	–	–	–	–	–	–	–	1	1
KK	Bracket, Coil	1171574	–	–	–	–	–	–	2	2	2	2	2	2	2	2
LL	Bracket, Coil	1171575	–	–	–	–	–	–	2	2	2	2	2	2	2	2
MM	Shield, Drain Pan	1172328	–	–	–	–	–	–	2	2	2	2	2	2	2	2
NN	Air Seal Assembly	1171640	–	–	–	–	–	–	1	1	1	1	–	–	–	–
NN		1171641	–	–	–	–	–	–	–	–	–	–	1	1	1	1
PP	Trough, Condensate	1171639	–	–	–	–	–	–	1	1	1	1	–	–	–	–
PP		1171638	–	–	–	–	–	–	–	–	–	–	1	1	1	1
RR	Trough, Condensate	1171637	–	–	–	–	–	–	1	1	1	1	1	1	1	1
SS	Baffle, Drip	1171646	–	–	–	–	–	–	2	2	2	2	–	–	–	–
SS		1171647	–	–	–	–	–	–	–	–	–	–	2	2	–	–
SS		1171648	–	–	–	–	–	–	–	–	–	–	–	–	2	2
TT	Ring, Drip	1171649	–	–	–	–	–	–	1	1	1	1	1	1	1	1
UU	Support, Drain Pan	1171657	–	–	–	–	–	–	1	1	1	1	1	1	1	1
WW	Support Coil	1171665	2	2	–	–	–	–	–	–	–	–	–	–	–	–
WW		1171666	–	–	2	2	2	2	–	–	–	–	–	–	–	–
XX	Support	1171664	1	1	1	1	1	1	–	–	–	–	–	–	–	–
YY	Plate, Filler	1171695	1	1	1	1	1	1	1	1	1	1	1	1	1	1
ZZ	Plate, Filler	1171696	–	–	–	–	–	–	1	1	1	1	1	1	1	1
)(	Grommet	1171737	1	1	1	1	1	1	1	1	1	1	1	1	1	1
)(	Grommet, Liquid	1171620	1	1	1	1	1	1	1	1	1	1	1	1	1	1
)(	Manual, Installation	49601500003	1	1	1	1	1	1	1	1	1	1	1	1	1	1
)(	Warranty	40106403004	1	1	1	1	1	1	1	1	1	1	1	1	1	1

AIRFLOW PERFORMANCE - CFM at a given Speed and Static reading							
Model (* = 2 or 4)	Blower Speed	Measured Static Pressure, inlet to outlet (inches water column)					
		0.10	0.20	0.30	0.40	0.50	0.60
FEM*X1800	High	766	739	706	666	619	566
	Medium	701	659	619	578	538	499
	Low	614	572	530	486	441	396
FSM*X1800	High	913	863	807	745	676	601
	Medium	852	810	758	696	625	544
	Low	643	623	584	529	456	366
FSU*X1800	High	852	810	758	696	625	544
	Low	643	623	584	529	456	366
FEM*X2400	High	941	905	868	830	792	753
	Medium	823	786	747	707	665	622
	Low	633	583	533	482	431	378
FSM*X2400	High	1055	991	926	860	793	724
	Medium	934	878	818	754	686	614
	Low	690	666	633	591	538	476
FSU*X2400	High	1055	991	926	860	793	724
	Low	934	878	818	754	686	614
FEM*X3000	High	1130	1097	1063	1028	992	955
	Medium	1033	1000	965	928	888	846
	Low	840	802	760	713	663	609
FSM*X3000	High	1167	1112	1048	977	896	808
	Medium	1070	1032	978	908	822	721
	Low	910	888	849	791	715	621
FSU*X3000	High	1070	1032	978	908	822	721
	Low	910	888	849	791	715	621
FEM2X3500	High	1437	1398	1354	1308	1257	1204
	Medium	1282	1238	1192	1142	1090	1036
	Low	1168	1118	1067	1014	959	903
FEM*X3600	High	1479	1437	1392	1344	1293	1240
	Medium	1327	1282	1236	1187	1135	1081
	Low	1192	1151	1100	1039	970	890
FSM*X3600	High	1650	1598	1541	1478	1410	1335
	Medium	1450	1412	1367	1313	1252	1183
	Low	1235	1208	1173	1132	1084	1029
FSU*X3600	High	1352	1316	1273	1223	1167	1103
	Low	1137	1112	1081	1043	998	946
FEM*X4200	High	1616	1578	1533	1480	1420	1353
	Medium	1479	1437	1392	1344	1293	1240
	Low	1303	1258	1211	1161	1108	1054
FSM*X4200 FSU*X4200	High	1720	1668	1602	1521	1426	1316
	Medium	1576	1540	1488	1421	1338	1239
	Low	1388	1367	1330	1278	1209	1124
FEM*X4800	High	1805	1772	1739	1704	1669	1632
	Medium	1652	1617	1581	1543	1504	1463
	Low	1458	1418	1377	1335	1292	1248

- continued on next page -

AIRFLOW PERFORMANCE - CFM at a given Speed and Static reading (continued)

Model (* = 2 or 4)	Blower Speed	Measured Static Pressure, inlet to outlet (inches water column)					
		0.10	0.20	0.30	0.40	0.50	0.60
FSM*X4800 FSU*X4800	High	1902	1824	1743	1659	1571	1479
	Medium	1830	1763	1690	1611	1527	1436
	Low	1625	1584	1531	1465	1387	1296
FEM*X6000	High	2057	2024	1989	1954	1916	1878
	Medium	1799	1766	1731	1695	1658	1618
	Low	1667	1633	1596	1558	1517	1475
FSM*X6000 FSU*X6000	High	2128	2050	1965	1875	1778	1674
	Medium	1959	1898	1829	1750	1663	1566
	Low	1748	1709	1659	1598	1525	1442

NOTES:

1. Airflow based on dry coil at 230V with factory approved filter and electric heater (2 element heater for model sizes 1800 – 3600, 3 element heater for model sizes 4200 – 6000)
2. Not recommended for use above 0.60 inches water column external static pressure.
3. Shaded cells indicate airflow is greater than 450 CFM per ton.

STATIC PRESSURE CORRECTION FROM DRY TO WET COIL (inches of water column)

Airflow performance chart above was developed using fan coils with DRY coils.
When taking a static reading across a WET coil, adjust the static pressure numbers above by **adding** the values in this table (for a given CFM, wet coil will have greater static pressure drop than dry coil).

Model Size	CFM															
	500	600	700	800	900	1000	1100	1200	1300	1400	1500	1600	1700	1800	1900	2000
1800 (all)	.034	.049	.063	–	–	–	–	–	–	–	–	–	–	–	–	–
2400 (all)	.016	.027	.038	.049	.059	–	–	–	–	–	–	–	–	–	–	–
3000 (all)	–	–	–	.049	.059	.070	.080	–	–	–	–	–	–	–	–	–
3500 (FEM) 3600 (FSU)	–	–	–	–	–	.055	.064	.073	.081	–	–	–	–	–	–	–
3600 (FEM) 3600 (FSM)	–	–	–	–	–	.034	.042	.049	.056	–	–	–	–	–	–	–
4200 (all)	–	–	–	–	–	–	–	.049	.056	.063	.070	–	–	–	–	–
4800 (all)	–	–	–	–	–	–	–	–	–	.038	.043	.049	.054	.059	–	–
6000 (all)	–	–	–	–	–	–	–	–	–	–	–	.027	.031	.035	.039	.043

STATIC PRESSURE DROP ACROSS FILTER (inches of water column)

Model Size	CFM								
	400	600	800	1000	1200	1400	1600	1800	2000
1800	.020	.044	.075	–	–	–	–	–	–
2400	–	.044	.075	.110	–	–	–	–	–
3000	–	–	.048	.072	.100	–	–	–	–
3500 & 3600	–	–	–	.072	.100	.130	–	–	–
4200	–	–	–	–	.070	.092	.120	–	–
4800	–	–	–	–	–	.092	.120	.152	–
6000	–	–	–	–	–	–	.120	.152	.187

FAN COIL MODEL NUMBER IDENTIFICATION GUIDE

	F	E	M	2	X	1800	A	1

F = Fan Coil

S = Standard PSC
E = BPM (Brushless Permanent Magnet)
V = Variable Speed **MOTOR TYPE**

U = Upflow
M = Multipositon
A = Apartment **INSTALLATION TYPE**

2 = R-22
4 = Environmentally Sound R-410A **REFRIGERANT**

X = TXV **METERING DEVICE**

1800 = 18,000 BTUH = 1½ tons
2400 = 24,000 BTUH = 2 tons
3000 = 30,000 BTUH = 2½ tons
3500 & 3600 = 36,000 BTUH = 3 tons
4200 = 42,000 BTUH = 3½ tons
4800 = 48,000 BTUH = 4 tons
6000 = 60,000 BTUH = 5 tons **NOMINAL CAPACITY**

Sales Code

Engineering Revision

ACCESSORIES PART NUMBER IDENTIFICATION GUIDE

	EB	AC	01	NCB	A

EB = Evaporator Blower

AC = Accessory

01 = Product Identifier Number

NCB = Non-Combustible Base Kit
DFK = Down Flow Kit
PLG = Power Plug (no heat kit)
SPK = Single Point Wiring Kit
FKS = Filter Kit Small
FKM = Filter Kit Medium
FKL = Filter Kit Large
FKX = Filter Kit Extra Large
CTK = Condensate Trap Kit (PVC pipe)

Sales Code