N80ESN/N80ESL

80% AFUE, Single-Stage, Multi-Speed ECM, Non-Condensing Gas Furnaces

TEMPSTAR®
Heating and Cooling Products

Product Specifications

A200116

Use of the AHRI Certified TM Mark indicates a manufacturer's participation in the program. For verification of certification for individual products, go to www.ahridirectory.org .

ISO 9001 Quality

A200115

LIMITED WARRANTY*

- 20 year heat exchanger limited warranty
- 5 year parts limited warranty

- With timely registration, an addition 5 year parts limited warranty

* For residential applications only, see warranty certificate for complete details and restrictions, including warranty coverage of other applications

EASIER TO SELL

- 80% AFUE
- Flame roll-out sensors standard
- Category I venting
- Blocked vent switch
- Louvered door
- 24 VAC and 115 VAC humidifier terminal
- Electronic air cleaner terminal
- Select sizes approved for twinning, refer to accessory kit listing
- N80ESL - Low NOx units are designed for California installations and can be installed in air quality management districts with a 40ng/J NOx emissions limit
- Cabinet air leakage less than 2.0% at 1.0 in. W.C. and cabinet air leakage less than 1.4% at 0.5 in. W.C. when tested in accordance with ASHRAE standard 193

TOUGHER

- Adjustable heating blower OFF delay
- Factory set blower ON delay
- RPJ aluminized steel heat exchanger
- High temperature limit control designed to prevent overheating
- Direct ignition with Silicon Nitride igniter
- One piece prepainted steel cabinet

QUIETER

- In-shot burners

EASIER TO INSTALL AND SERVICE

- 33 1/3" (847mm) high, for ease of installation
- Quarter turn knobs for easy door removal and secure attachment
- Convertible to propane with gas converstion accessory kit
- Four position - upflow/downflow/horizontal (left/right) installation
- Three position inducer elbow capability
- Through the casing flue pipe for counterflow applications
- Common venting with other Category I appliances
- Masonry chimney adapter available
- Self diagnostics
- Slide out blower assembly

Model N80ESN/L	Input (BTUH)	Efficiency AFUE	Cooling Capacity CFM range	Dimensions H x W x D Inches (Millimeters)	Shipping Wt. Lbs(Kg)
0451412	44,000	80%	415 - 1080	33-1/3 x 14-3/16 x 29 (847 x 360 x 737)	104 (47)
0451712	44,000	80%	320 - 1215	33-1/3 x 17-1/2 x 29 (847 x 445 x 737)	119 (54)
0701412	66,000	80%	315 - 1070	33-1/3 x 14-3/16 x 29 (847 x 360 x 737)	114 (52)
0701712	66,000	80%	385 - 1005	33-1/3 x 17-1/2 x 29 (847 x 445 x 737)	120 (54)
0701716	66,000	80%	915 - 1515	33-1/3 x 17-1/2 x 29 (847 x 445 x 737)	126 (57)
0702116	66,000	80%	775 - 1545	33-1/3 x 21 x 29 (847 x 533 x 737)	142 (64)
0901714	88,000	80%	750 - 1210	33-1/3 x 17-1/2 x 29 (847 x 445 x 737)	131 (49)
0902116	88,000	80%	845 - 1445	33-1/3 x 21 x 29 (847 x 533 x 737)	137 (62)
0902120	88,000	80%	915 - 1980	33-1/3 x 21 x 29 (847 x 533 x 737)	140 (64)
0902420	88,000	80%	845 - 1960	33-1/3 x 24-1/2 x 29 (847 x 622 x 737)	146 (66)
1102120	110,000	80%	990 - 1715	33-1/3 x 21 x 29 (847 x 533 x 737)	146 (66)
1102420	110,000	80%	820 - 2005	33-1/3 x 24-1/2 x 29 (847 x 622 x 737)	161 (73)
1352420	132,000	80%	1025 - 1810	33-1/3 x 24-1/2 x 29 (847 x 622 x 737)	167 (76)
1552420	154,000	80%	835 - 1965	33-1/3 x 24-1/2 x 29 (847 x 622 x 737)	168 (76)

DIMENSIONAL DRAWING

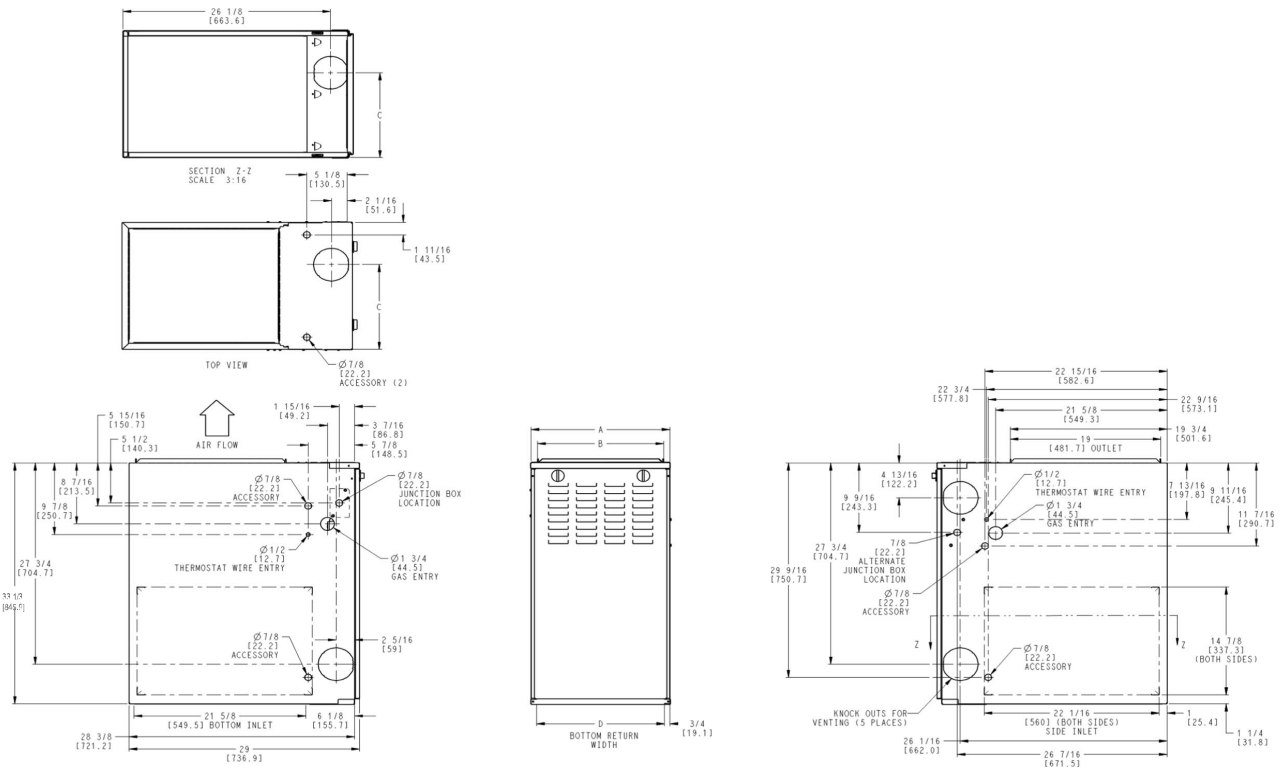

A190084

FURNACE SIZE	A CABINET WIDTH	B OUTLET WIDTH	C TOP AND BOTTOM FLUE COLLAR	D BOTTOM INLET WIDTH	VENT CONNECTION SIZE	SHIP WT. LB. (KG)
0451412	14-3/16 (360)	12-9/16 (319)	9-5/16 (237)	12-11/16 (322)	4 (102)	104 (47)
0451712	17-1/2 (445)	15-7/8 (403)	11-9/16 (294)	16 (406)	4 (102)	119 (54)
0701412	14-3/16 (360)	12-9/16 (319)	9-5/16 (237)	12-11/16 (322)	4 (102)	114 (52)
0701712	17-1/2 (445)	15-7/8 (403)	11-9/16 (294)	16 (406)	4 (102)	120 (54)
0701716	17-1/2 (445)	15-7/8 (403)	11-9/16 (294)	16 (406)	4 (102)	126 (57)
0702116	21 (533)	19-3/8 (492)	13-5/16 (338)	19-1/2 (495)	4 (102)	142 (64)
0901714	17-1/2 (445)	15-7/8 (403)	11-9/16 (294)	16 (406)	4 (102)	131 (49)
0902116	21 (533)	19-3/8 (492)	13-5/16 (338)	19-1/2 (495)	4 (102)	137 (62)
0902120	21 (533)	19-3/8 (492)	13-5/16 (338)	19-1/2 (495)	4 (102)	140 (64)
0902420	24-1/2 (622)	22-7/8 (581)	15-1/16 (383)	23 (584)	4 (102)	146 (66)
1102120	21 (533)	19-3/8 (492)	13-5/16 (338)	19-1/2 (495)	4 (102)	146 (66)
1102420	24-1/2 (622)	22-7/8 (581)	15-1/16 (383)	23 (584)	4 (102)	161 (73)
1352420	24-1/2 (622)	22-7/8 (581)	15-1/16 (383)	23 (584)	4 (102)*	167 (76)
1552420	24-1/2 (622)	22-7/8 (581)	15-1/16 (383)	23 (584)	4 (102)*	168 (76)

*. 135 and 155 size furnaces require a 5 or 6-in. (127 or 152 mm) vent. Use a vent adapter between furnace and vent stack. See Installation Instructions for complete installation requirements.

Manufacturer reserves the right to change, at any time, specifications and designs without notice and without obligations.

MODEL NUMBER NOMENCLATURE

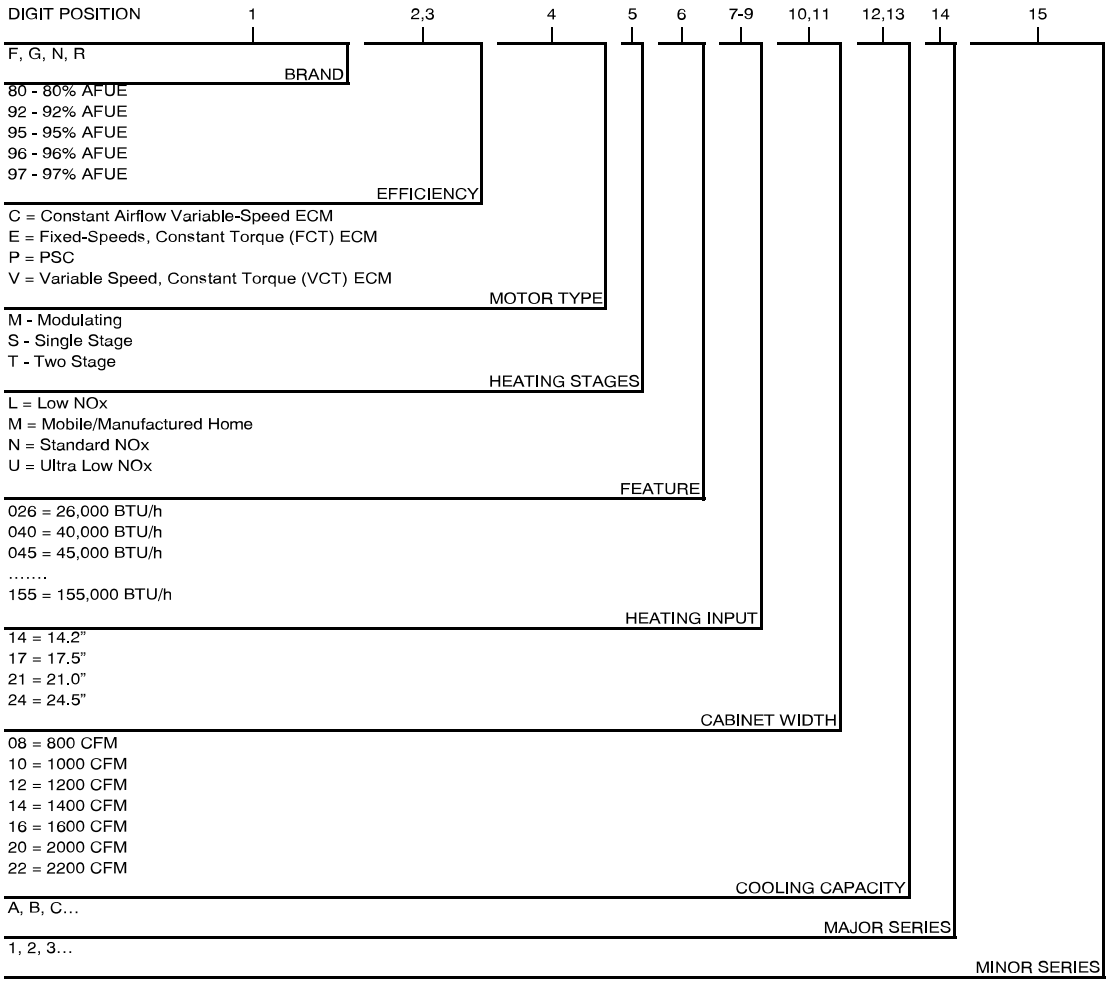

A190043

FURNACE COMPONENTS

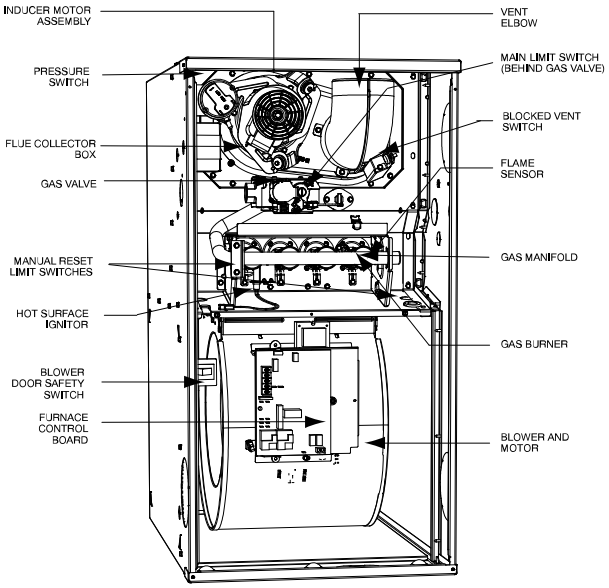

A190086

NOTE: The furnaces are factory shipped for use with natural gas. These furnaces can be field-converted for propane gas with a factory-authorized and listed accessory conversion kit.

CLEARANCES

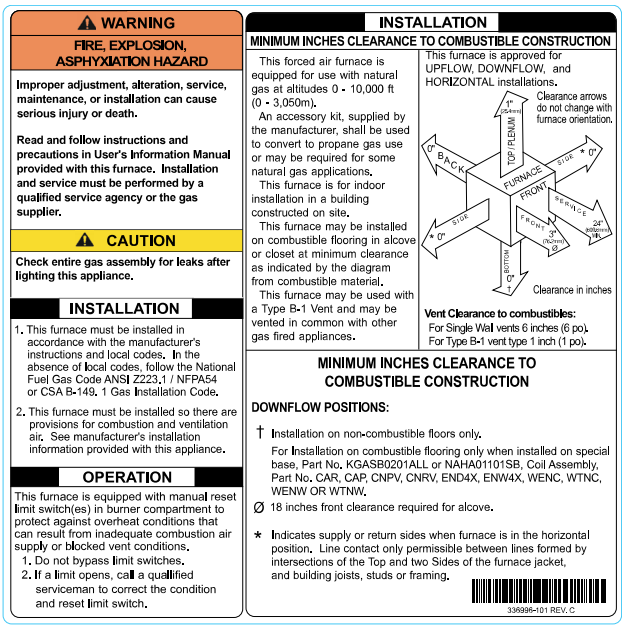

WARNING

FIRE, EXPLOSION, ASPHYXIATION HAZARD

Improper adjustment, alteration, service, maintenance, or installation can cause serious injury or death.

Read and follow instructions and precautions in User's Information Manual provided with this furnace. Installation and service must be performed by a qualified service agency or the gas supplier.

CAUTION

Check entire gas assembly for leaks after lighting this appliance.

INSTALLATION

1. This furnace must be installed in accordance with the manufacturer's instructions and local codes. In the absence of local codes, follow the National Fuel Gas Code ANSI Z223.1 / NFPA54 or CSA B-149. 1 Gas Installation Code.
2. This furnace must be installed so there are provisions for combustion and ventilation air. See manufacturer's installation information provided with this appliance.

OPERATION

This furnace is equipped with manual reset limit switch(es) in burner compartment to protect against overheat conditions that can result from inadequate combustion air supply or blocked vent conditions.

1. Do not bypass limit switches.
2. If a limit opens, call a quallified serviceman to correct the condition and reset limit switch.

INSTALLATION

MINIMUM INCHES CLEARANCE TO COMBUSTIBLE CONSTRUCTION

This forced air furnace is equipped for use with natural gas at altitudes 0 - 10,000 ft (0 - 3,050m).

An accessory kit, supplied by the manufacturer, shall be used to convert to propane gas use or may be required for some natural gas applications.

This furnace is for indoor installation in a building constructed on site.

This furnace may be installed on combustible flooring in alcove or closet at minimum clearance as indicated by the diagram from combustible material.

This furnace may be used with a Type B-1 Vent and may be vented in common with other gas fired appliances.

This furnace is approved for UPFLOW, DOWNFLOW, and HORIZONTAL installations.

Clearance arrows do not change with furnace orientation.

Clearance in inches

Vent Clearance to combustibles:
For Single Wall vents 6 inches (6 po).
For Type B-1 vent type 1 inch (1 po).

MINIMUM INCHES CLEARANCE TO COMBUSTIBLE CONSTRUCTION

DOWNFLOW POSITIONS:

† Installation on non-combustible floors only.
For Installation on combustible flooring only when installed on special base, Part No. KGASB0201ALL or NAHA01101SB, Coil Assembly, Part No. CAR, CAP, CNPV, CNRV, END4X, ENW4X, WENC, WTNC, WENW OR WTNW.

Ø 18 inches front clearance required for alcove.

* Indicates supply or return sides when furnace is in the horizontal position. Line contact only permissible between lines formed by intersections of the Top and two Sides of the furnace jacket, and building joists, studs or framing.

398996-101 REV. C

A10269

SPECIFICATIONS

Unit Size		0451412	0451712	0701412	0701712	0701716	0702116	0901714
RATINGS AND PERFORMANCE								
Input Btuh*	All Standard All Low NOx Upflow	44,000	44,000	66,000	66,000	66,000	66,000	88,000
Nonweatherized ICS	All Low NOx Downflow/Horizontal	42,000	42,000	63,000	63,000	63,000	63,000	84,000
Output Capacity (Btuh)†	All Standard All Low NOx Upflow	36,000	35,000	54,000	54,000	54,000	53,000	71,000
Nonweatherized ICS	All Low NOx Downflow/Horizontal	34,000	34,000	51,000	51,000	51,000	51,000	68,000
AFUE†		80%						
Certified Temperature Rise Range - °F (°C)		30-60 (17-33)	30-60 (17-33)	30-60 (17-33)	35-65 (19-36)	25-55 (14-30)	25-55 (14-30)	40-70 (22-39)
Certified External Static Pressure	Heat/Cool	0.10/0.50	0.10/0.50	0.12/0.50	0.12/0.50	0.12/0.50	0.12/0.50	0.15/0.50
Airflow CFM‡	Heating	710	760	1090	985	1175	1305	1203
	Cooling	1080	1215	1070	1005	1515	1545	1210
ELECTRICAL								
Unit Volts-Hertz-Phase		115-60-1						
Operating Voltage Range	Min-Max	104-127						
Maximum Unit Amps		5.6	7.6	5.6	5.6	10.8	10.0	8.3
Unit Ampacity		7.8	10.3	7.8	7.8	14.3	13.3	11.0
Maximum Wire Length (Measure 1 Way in Ft (M)		47 (14.3)	36 (11)	47 (14.3)	47 (14.3)	25 (7.6)	27 (8.2)	33 (10.1)
Minimum Wire Size		14						
Maximum Fuse or Ckt Bkr Size (Amps)**		15						
Transformer (24v)		40va						
External Control	Heating	12va						
Power Available	Cooling	35va						
Air Conditioning Blower Relay		Standard						
CONTROLS								
Heating Blower Control		Solid State Time Operation						
Burners (Monoport)		2	2	3	3	3	3	4
Gas Connection Size		1/2in. NPT						
GAS CONTROLS								
Gas Valve (Redundant)	Mfr	WhiteRodgers						
	Min. inlet pressure (In. W.C.)	4.5 (Natural Gas)						
	Max. inlet pressure (In. W.C.)	13.6 (Natural Gas)						
Ignition Device		Hot Surface						
Factory installed orifice		Size 43						
BLOWER DATA								
Direct Drive Motor HP		1/3	1/2	1/3	1/3	3/4	3/4	1/2
Motor Full Load Amps		4.4	6.4	4.4	4.4	9.60	8.8	6.8
RPM (Nominal) Speeds		1050-5	1050-5	1050-5	1050-5	1050-5	1050-5	1050-5
Blower Wheel Diameter x Width - In. (mm)		10 x 6 (254 x 152)	10 x 8 (254 x 203)	10 x 6 (254 x 152)	11 x 8 (279 x 203)	11 x 8 (279 x 203)	10 x 10 (254 x 254)	11 x 8 (279 x 203)

*. Gas input ratings are certified for elevations to 2000 ft. (610 M). In USA, For elevations above 2000 ft (610 M), reduce ratings 4 percent for each 1000 ft (305 M) above sea level. Refer to National Fuel Gas Code NFPA 54/ANSI Z223.1 Table F.4 or furnace installation instructions.

†. Capacity in accordance with U.S. Government DOE test procedures.

‡. Airflow shown is for bottom only return-air supply for the as-shipped speed tap. For air delivery above 1800 CFM, see Air Delivery table for other options. A filter is required for each return-air supply. An airflow reduction of up to 7 percent may occur when using the factory-specified 4-5/16-in. (110 mm) wide, high efficiency media filter..

**. Time-delay type is recommended.

ICS = Isolated Combustion System

SPECIFICATIONS (continued)

Unit Size		0902116	0902120	0902420	1102120	1102420	1352420	1552420
RATINGS AND PERFORMANCE								
Input Btuh* Nonweatherized ICS	All Standard All Low NOx Upflow	88,000	88,000	88,000	110,000	110,000	132,000	154,000
	All Low NOx Downflow/Horizontal	84,000	84,000	84,000	105,000	105,000	126,000	147,000
Output Capacity (Btuh)† Nonweatherized ICS	All Standard All Low NOx Upflow	72,000	71,000	72,000	90,000	90,000	107,000	125,000
	All Low NOx Downflow/Horizontal	68,000	68,000	69,000	85,000	86,000	102,000	119,000
AFUE†		80%						
Certified Temperature Rise Range °F (°C)		35-65 (19-36)	25-55 (14-30)	30-60 (17-33)	30-60 (17-33)	30-60 (17-33)	40-70 (22-39)	45-75 (25-41)
Certified External Static Pressure	Heat/Cool	0.15/0.50	0.15/0.50	0.15/0.50	0.20/0.50	0.20/0.80	0.20/0.50	0.20/0.50
Airflow CFM‡	Heating	1418	1650	1565	1890	1930	1760	1950
	Cooling	1445	1980	1960	2040	2005	1810	1965
ELECTRICAL								
Unit Volts-Hertz-Phase		115-60-1						
Operating Voltage Range	Min-Max	104-127						
Maximum Unit Amps		8.3	13	10.3	13.4	10.7	10.7	10.7
Unit Ampacity		11	16.90	13.50	17.40	14	14	14
Maximum Wire Length (Measure 1 Way in Ft (M))		33 (10.1)	34 (10.4)	27 (8.2)	33 (10.1)	26 (7.9)	26 (7.9)	26 (7.9)
Minimum Wire Size		14	12	14	12	14	14	14
Maximum Fuse or Ckt Bkr Size (Amps)**		15	20	15	20	15	15	15
Transformer (24v)		40va						
External Control Power Available	Heating	12va						
	Cooling	35va						
Air Conditioning Blower Relay		Standard						
CONTROLS								
Heating Blower Control		SolidState Time Operation						
Burners (Monoport)		4	4	4	5	5	6	7
Gas Connection Size		1/2in. NPT						
GAS CONTROLS								
Gas Valve (Redundant)	Mfr.	WhiteRodgers						
	Min. inlet pressure (In. W.C.)	4.5 (Natural Gas)						
	Max. inlet pressure (In. W.C.)	13.6 (Natural Gas)						
Ignition Device		Hot Surface						
Factory installed orifice		Size 43						
BLOWER DATA								
Direct Drive Motor HP		1/2	1	3/4	1	3/4	3/4	3/4
Motor Full Load Amps		6.80	11.50	8.80	11.50	8.80	8.80	8.80
RPM (Nominal)Speeds		1050-5	1050-5	1050-5	1050-5	1050-5	1050-5	1050-5
Blower Wheel Diameter x Width - In. (mm)		10 x 10 (254 x 254)	11 x 11 (279 x 279)	11 x 11 (279 x 279)	11 x 11 (279 x 279)	11 x 11 (279 x 279)	11 x 11 (279 x 279)	11 x 11 (279 x 279)

*. Gas input ratings are certified for elevations to 2000 ft. (610 M). In USA, for elevations above 2000 ft. (610 M), reduce ratings 4 percent for each 1000 ft. (305 M) above sea level. Refer to National Fuel Gas Code NFPA 54/ANSI Z223.1 Table F.4 or furnace installation instructions.

†. Capacity in accordance with U.S. Government DOE test procedures.

‡. Airflow shown is for bottom only return-air supply for the as-shipped speed tap. For air delivery above 1800 CFM, see Air Delivery table for other options. A filter is required for each return-air supply. An airflow reduction of up to 7 percent may occur when using the factory-specified 4-5/16-in. (110 mm) wide, high efficiency media filter..

**. Time-delay type is recommended.

ICS = Isolated Combustion System

AIR DELIVERY - CFM (with filter)

Furnace	Wire Lead Color	Function	Test Airflow Delivery @ Various External Static Pressures									
			0.1	0.2	0.3	0.4	0.5	0.6	0.7	0.8	0.9	1
0451412	Gray	Cooling. Do not use for heating.	1230	1190	1155	1120	1080	1045	1010	975	935	895
	Yellow	Alt Cooling or alt Heating	980	945	920	890	855	815	770	735	690	645
	Orange	Alt Cooling or alt Heating	770	720	685	640	600	560	520	475	430	385
	Blue	Heating or alt Cooling	710	660	620	580	540	490	455	415	375	335
	Red	Alt Cooling. Do not use for heating.	600	540	500	455	415	385	345	305	235	-
0451712	Gray	Cooling. Do not use for heating.	1370	1335	1295	1255	1215	1175	1135	1095	1055	1020
	Yellow	Alt Cooling or alt Heating	1130	1085	1040	995	955	910	865	825	780	730
	Orange	Alt Cooling or alt Heating	930	885	835	795	745	700	655	600	545	495
	Blue	Heating or alt Cooling	760	720	670	625	580	515	460	410	355	300
	Red	Alt Cooling. Do not use for heating.	610	500	445	375	320	260	200	135	-	-
0701412	Gray	Cooling. Do not use for heating.	1205	1170	1143	1105	1070	1035	1000	960	925	885
	Blue	Heating or alt Cooling	1095	1060	1030	995	960	925	885	840	800	735
	Yellow	Alt Cooling or alt Heating	920	880	845	805	765	730	685	620	560	510
	Orange	Alt Cooling. Do not use for heating.	715	650	610	575	520	465	410	380	305	245
	Red	Alt Cooling. Do not use for heating.	635	490	445	375	315	270	205	230	190	140
0701712	Gray	Cooling. Do not use for heating.	1185	1140	1095	1055	1005	960	915	865	820	780
	Yellow	Alt Cooling or alt Heating	1000	940	895	850	800	750	695	650	600	555
	Blue	Heating or alt Cooling	990	935	895	845	790	740	690	640	590	535
	Orange	Alt Cooling or alt Heating	855	775	720	660	605	560	495	435	385	335
	Red	Alt Cooling. Do not use for heating.	860	685	515	445	385	340	275	205	-	-
0701716	Gray	Cooling. Do not use for heating.	1650	1615	1580	1545	1515	1480	1445	1415	1380	1350
	Yellow	Alt Cooling. Do not use for heating.	1405	1365	1325	1285	1250	1215	1175	1140	1100	1065
	Orange	Alt Cooling or alt Heating	1255	1215	1175	1130	1090	1050	1010	970	930	895
	Blue	Heating or alt Cooling	1185	1140	1095	1050	1005	965	920	880	840	800
	Red	Alt Cooling. Do not use for heating.	1100	1050	1005	960	915	870	825	785	740	700
0702116	Gray	Cooling. Do not use for heating.	1735	1685	1640	1595	1545	1495	1450	1405	1360	1310
	Yellow	Alt Cooling or alt Heating	1480	1435	1395	1340	1290	1240	1190	1135	1085	1030
	Blue	Heating or alt Cooling	1315	1275	1225	1180	1135	1085	1030	975	915	860
	Orange	Alt Cooling or alt Heating	1135	1080	1030	985	935	885	835	770	705	645
	Red	Alt Cooling. Do not use for heating.	980	930	875	820	775	715	665	595	530	455
0901714	Gray	Cooling. Do not use for heating.	1355	1320	1285	1245	1210	1165	1125	1080	1025	815
	Yellow	Alt Cooling or alt Heating	1295	1255	1220	1185	1140	1100	1055	1005	955	815
	Blue	Heating or alt Cooling	1220	1185	1150	1105	1065	1025	975	915	840	740
	Orange	Alt Cooling or alt Heating	1030	985	940	900	845	790	715	655	590	535
	Red	Alt Cooling. Do not use for heating.	945	905	855	800	750	670	600	540	490	435
0902116	Gray	Cooling. Do not use for heating.	1625	1580	1535	1490	1445	1395	1340	1260	1135	995
	Yellow	Alt Cooling or alt Heating	1425	1380	1335	1290	1235	1185	1125	1075	1020	640
	Blue	Heating or alt Cooling	1440	1395	1350	1305	1255	1200	1145	1090	1040	950
	Orange	Alt Cooling or alt Heating	1260	1210	1160	1105	1050	990	935	880	820	755
	Red	Alt Cooling. Do not use for heating.	1095	1040	980	905	845	780	720	650	585	520
0902120	Gray	Cooling. Do not use for heating.	2180	2130	2080	2030	1980	1925	1870	1805	1745	1680
	Yellow	Alt Cooling or alt Heating	1900	1845	1795	1740	1685	1635	1570	1500	1435	1375
	Blue	Heating or alt Cooling	1685	1620	1565	1505	1455	1385	1320	1260	1200	1140
	Orange	Alt Cooling or alt Heating	1390	1315	1240	1175	1095	1030	970	900	825	760
	Red	Alt Cooling. Do not use for heating.	1240	1155	1075	990	915	835	765	690	615	555
0902420	Gray	Cooling. Do not use for heating.	2190	2135	2075	2015	1960	1900	1835	1775	1705	1630
	Yellow	Alt Cooling or alt Heating	1870	1810	1745	1685	1625	1565	1495	1420	1345	1280
	Blue	Heating or alt Cooling	1580	1510	1445	1385	1320	1240	1175	1115	1050	970
	Orange	Alt Cooling or alt Heating	1305	1220	1160	1075	1000	930	865	770	690	610
	Red	Alt Cooling. Do not use for heating.	1210	1075	1000	915	845	765	675	595	515	425
1102120	Gray	Cooling. Do not use for heating.	2255	2205	2150	2100	2040	1985	1920	1835	1735	1615
	Blue	Heating or alt Cooling	1945	1890	1830	1770	1715	1655	1600	1545	1480	1430
	Yellow	Alt Cooling or alt Heating	1600	1525	1465	1400	1335	1275	1210	1150	1080	1015
	Orange	Alt Cooling. Do not use for heating.	1420	1340	1280	1200	1140	1065	1005	925	865	790
	Red	Alt Cooling. Do not use for heating.	1280	1205	1140	1055	990	910	840	760	695	630
1102420	Gray	Cooling. Do not use for heating.	2250	2190	2130	2070	2005	1950	1885	1820	1755	1685
	Blue	Heating or alt Cooling	1995	1930	1865	1800	1740	1670	1605	1535	1465	1400
	Yellow	Alt Cooling. Do not use for heating.	1540	1460	1385	1305	1235	1165	1095	1035	955	890
	Orange	Alt Cooling or alt Heating	1345	1195	1135	1055	980	920	845	770	695	620
	Red	Alt Cooling. Do not use for heating.	1335	1075	965	890	820	735	660	580	505	440
1352420	Gray	Cooling. Do not use for heating.	2065	2005	1940	1875	1810	1740	1670	1600	1530	1470
	Blue	Heating or alt Cooling	1825	1760	1695	1630	1560	1490	1420	1350	1275	1205
	Yellow	Alt Cooling or alt Heating	1760	1690	1625	1555	1485	1415	1345	1275	1200	1130
	Orange	Alt Cooling. Do not use for heating.	1620	1550	1480	1405	1335	1260	1195	1130	1065	995
	Red	Alt Cooling. Do not use for heating.	1325	1260	1185	1100	1025	955	885	805	735	670

Manufacturer reserves the right to change, at any time, specifications and designs without notice and without obligations.

AIR DELIVERY - CFM (with filter) (Continued)

Furnace	Wire Lead Color	Function	Test Airflow Delivery @ Various External Static Pressures									
			0.1	0.2	0.3	0.4	0.5	0.6	0.7	0.8	0.9	1
1552420	Gray	Cooling. Do not use for heating.	2205	2150	2090	2030	1965	1905	1840	1780	1710	1645
	Blue	Heating or alt Cooling	2055	1995	1935	1875	1810	1750	1690	1615	1540	1460
	Yellow	Alt Cooling or alt Heating	1860	1795	1730	1670	1605	1540	1470	1395	1320	1250
	Orange	Alt Cooling. Do not use for heating.	1495	1430	1355	1285	1210	1130	1065	995	930	850
	Red	Alt Cooling. Do not use for heating.	1295	1085	1000	910	835	765	670	600	530	465

Footnotes

1. A filter is required for each return-air inlet. Airflow performance included 3/4-in. (19 mm) washable filter media such as contained in factory-authorized accessory filter rack. To determine airflow performance without this filter, assume an additional 0.1 In. W.C. available external static pressure.
2. Adjust the blower speed tabs as necessary for the proper air temperature rise for each installation.
3. -- Indicates unstable operating conditions.
4. If the same motor speed tap is needed for heating and cooling, a Jumper Wire accessory kit is available (see Specification sheet for the current Jumper Wire accessory part number), see Function column for applicable limitations.

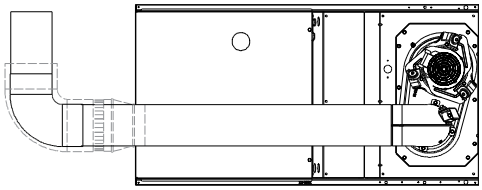

SEE NOTES: 1,2,4,5,7,8,9

HORIZONTAL RIGHT

A02068

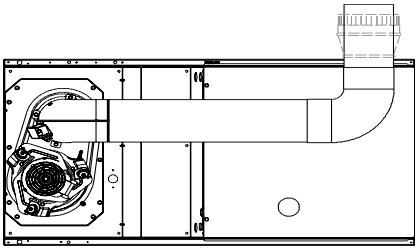

SEE NOTES: 1,2,4,5,7,8,9

HORIZONTAL LEFT

A02065

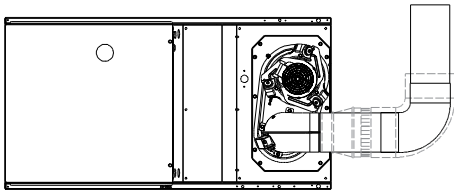

SEE NOTES: 1,2,4,7,8,9

HORIZONTAL RIGHT

A02069

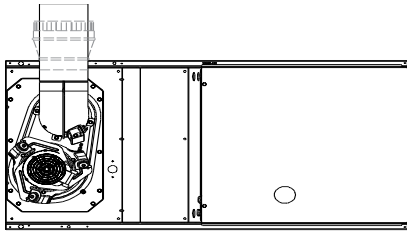

SEE NOTES: 1,2,4,5,7,8,9

HORIZONTAL LEFT

A02066

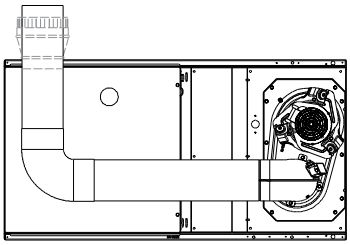

SEE NOTES: 1,2,4,5,7,8,9

HORIZONTAL RIGHT

A02070

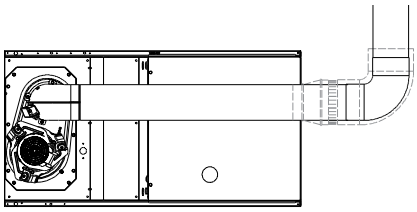

SEE NOTES: 1,2,4,5,7,8,9

HORIZONTAL LEFT

A02067

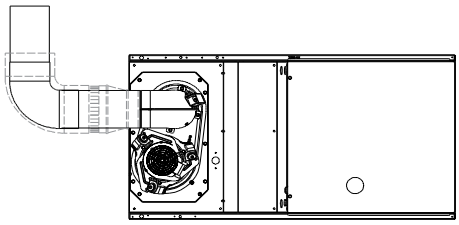

SEE NOTES: 1,2,4,7,8,9

HORIZONTAL LEFT

A02064

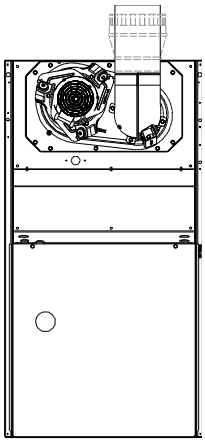

SEE NOTES: 1,2,4,7,8,9

UPFLOW

A02058

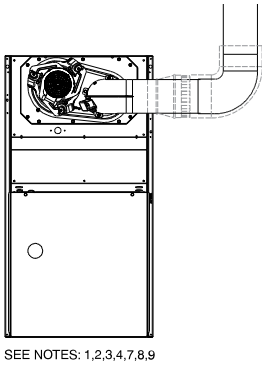

A02059

UPFLOW

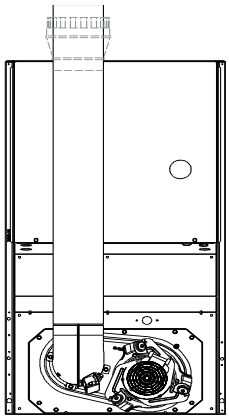

A02061

DOWNFLOW

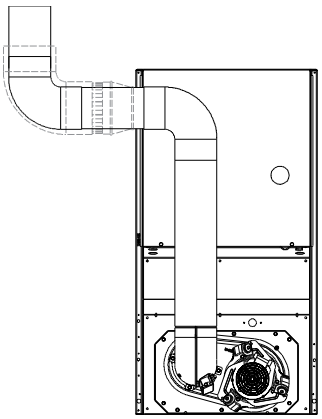

A02060

DOWNFLOW

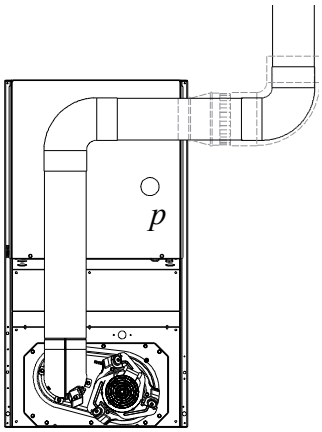

A02063

DOWNFLOW

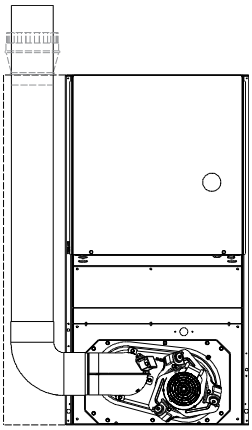

A02062

DOWNFLOW

VENTING NOTES

1. For common vent, vent connector sizing and vent material: United States, latest edition of the National Fuel Gas Code (NFGC), ANSI Z223.1/NFPA 54.
2. Immediately increase to 5-in. (127 mm) vent connector outside furnace casing when 5-in. (127 mm) vent connector required, refer to Note 1.
3. Side outlet vent for upflow and downflow installations must use Type B vent immediately after exiting the furnace, except when Downflow Vent Guard is used in downflow position.
4. Type B vent where required, refer to Note 1.
5. 4-in. (102 mm) single wall vent must be used inside furnace casing and the Downflow Vent Guard Kit.
6. Accessory Downflow Vent Guard Kit required in downflow installations with bottom vent configuration.
7. Chimney Adapter Kit required for exterior masonry chimney applications. Refer to Chimney Adapter Kits for sizing and complete application details.
8. Secure vent connector to furnace elbow with (2) corrosion-resistant sheet metal screws, space approximately 180 apart.
9. Secure all other single wall vent connector joints with (3) corrosion-resistant screws spaced approximately 120 apart. Secure Type B vent connectors per vent connector manufacturer's recommendations.

ACCESSORIES

PART NO.	DESCRIPTION	0451412	0451712	0701412	0701712	0701716	0702116	0901714
FHG1425-2	External Bottom Return Filter Rack*	X	-	X	-	-	-	-
FHG1625-2		-	X	-	X	X	-	X
FHG2025-2		-	-	-	-	-	X	-
325531-402	Unframed Filter 3/4-in. (19 mm)*	X	X	X	X	X	-	X
325531-403		-	-	-	-	-	X	-
NAHA01101SB	Combustible Floor Base	X	X	X	X	X	X	X
NAHB00301VC	Downflow Vent Guard	X	X	X	X	X	X	X
NAHB00101CA	Coil Adapter Kit	X	X	X	X	X	X	X
NAHB00201CA		X	X	X	X	X	X	X
NAHB00301CA		X	X	X	X	X	X	X
NAHA00401DH	Chimney Adapter Kit	X	X	X	X	X	X	X
AGAGC8NPS01A	Natural-to-Propane Conversion Kit†	X	X	X	X	X	X	X
AGAGC8PNS01A	Propane-to-Natural Conversion Kit†	X	X	X	X	X	X	X
AGATWNPUA01A	Twinning Kit	-	-	-	-	-	X	-
AGABLRJMP10A	Blower Speed Tap Jumper Kit (10 pack)	X	X	X	X	X	X	X

*. Ordered through FAST Parts
†. Factory-authorized and field installed. Fuel conversion kits are CSA (formerly AGA/CGA) recognized.
X = Accessory

PART NO.	DESCRIPTION	0902116	0902120	0902420	1102120	1102420	1352420	1552420
FHG2025-2	External Bottom Return Filter Rack*	X	X	-	X	-	-	-
FHG2424-2		-	-	X	-	X	X	X
325531-403	Unframed Filter 3/4-in. (19 mm)*	X	X	-	X	-	-	-
325531-404		-	-	X	-	X	X	X
NAHA01101SB	Combustible Floor Base	X	X	X	X	X	X	X
NAHB00301VC	Downflow Vent Guard	X	X	X	X	X	X	X
NAHB00101CA	Coil Adapter Kit	X	X	X	X	X	X	X
NAHB00201CA		X	X	X	X	X	X	X
NAHB00301CA		X	X	X	X	X	X	X
NAHA00401DH	Chimney Adapter Kit	X	X	X	X	X	-	-
NAHA00301DH		-	-	-	-	-	X	X
AGAGC8NPS01A	Natural-to-Propane Conversion Kit†	X	X	X	X	X	X	X
AGAGC8PNS01A	Propane-to-Natural Conversion Kit†	X	X	X	X	X	X	X
AGATWNPUA01A	Twinning Kit	X	X	X	X	X	X	X
AGABLRJMP10A	Blower Speed Tap Jumper Kit (10 pack)	X	X	X	X	X	X	X

*. Ordered through FAST Parts
†. Factory-authorized and field installed. Fuel conversion kits are CSA (formerly AGA/CGA) recognized.
X = Accessory

© 2025 Carrier. All rights reserved.

Manufacturer reserves the right to change, at any time, specifications and designs without notice and without obligations.