N96VSN (Series B)

Up to 97% AFUE, Single-Stage, Variable 25-Speed, Non-Communicating, 4-Way Multipoise Condensing Gas Furnace

Product Data

Representative drawing only. Some product models may vary.

Use of the AHRI Certified TM Mark indicates a manufacturer's participation in the program For verification of certification for individual products, go to www.ahridirectory.org.

WARNING

CARBON MONOXIDE POISONING AND FIRE HAZARD

Failure to follow this warning could result in personal injury, death, and/or property damage.

This furnace is not designed for use in recreation vehicles or outdoors. This furnace is designed for use in manufactured (Mobile) homes when an optional Mobile Home accessory kit is installed.

Failure to follow this warning could result in personal injury, death, and/or property damage.

CERTIFICATIONS

Certain sizes meet ENERGY STAR® version 5.0 North (97%+), and ENERGY STAR® version 5.0 South (95%+) criteria for gas furnaces, depending on orientation specific AFUE. See Specifications table for details.

EASIER TO SELL

- Up to 97.0% AFUE in upflow and horizontal positions 95% AFUE in downflow position
- Variable-speed, constant-torque ECM blower motor
- Supports single- and two-stage cooling units
- Dehumidification feature in cooling
- All sizes can be installed in air quality management districts with a 40 ng/J NOx emission requirement
- Cabinet air leakage less than 2.0% at 1.0 in. w.c. and cabinet air leakage less than 1.4% at 0.5 in. w.c. when tested in accordance with ASHRAE standard 193
- Control of continuous fan speed from a compatible thermostat.

TOUGHER

- Flame roll-out sensor standard
- Adjustable heating blower OFF delay
- Factory set blower ON delay
- RPJ® primary heat exchanger
- Stainless steel secondary heat exchanger
- High temperature limit control designed to prevent overheating
- Direct ignition with Silicon Nitride igniter
- Fully insulated steel cabinet

EASIER TO INSTALL AND SERVICE

- On-board NFC antenna makes setup a tap away when using the service technician app
- Direct vent (2-pipe), single-pipe venting or ventilated combustion air
- 24 VAC humidifier terminal
- Electronic air cleaner terminal
- 35” (889mm) high, for ease of installation
- Quarter turn knobs for easy door removal and secure attachment
- Convertible to propane with gas conversion accessory kit
- Four position - upflow/downflow/horizontal (left/right) installation
- Twelve different venting configurations
- Twinning capable with accessory kit on select models
- Through the casing flue pipe for counterflow or horizontal applications with accessory (order separately)
- Concentric vent available
- Slide out heat exchanger assembly and blower assembly

LIMITED WARRANTY*

- Default 5-year parts limited warranty
- Default 20-year heat exchanger limited warranty
  - 10-year parts and lifetime heat exchanger limited warranty with timely registration*
  - Equipment must be registered within 90 days of original installation, except in jurisdictions where warranty benefits cannot be conditioned on registration.

* Applies to original purchaser/homeowner and not available to subsequent owners.

See Warranty Certificate for complete details and restrictions.

UNIT PERFORMANCE DATA

Model	Input (BTUh)	Efficiency AFUE		Cooling Capacity CFM range	Dimensions H x W x D In (mm)	Shipping Wt. Lbs (Kg)
		Upflow	Downflow/Hz			
0401410	40,000	96%	95%	130-990	35 x 14-3/16 x 29-1/2 (889 x 361 x 750)	124 (56.2)
0401712	40,000	96.7%	95%	205-1105	35 x 17-1/2 x 29-1/2 (889 x 445 x 750)	134 (60.8)
0601412	60,000	95%	95%	175-1155	35 x 14-3/16 x 29-1/2 (889 x 361 x 750)	128 (58.1)
0601716	60,000	97%	95%	345-1565	35 x 17-1/2 x 29-1/2 (889 x 445 x 750)	144 (65.3)
0801716	80,000	97%	95%	255-1625	35 x 17-1/2 x 29-1/2 (889 x 445 x 750)	151 (68.5)
0802120	80,000	97%	95%	270-2110	35 x 21 x 29-1/2 (889 x 533 x 750)	161 (73.0)
1002120	100,000	96.3%	95%	400-2120	35 x 21 x 29-1/2 (889 x 533 x 750)	172 (78.0)
1202422	120,000	96.1%	95%	350-2245	35 x 24 x 29-1/2 (889 x 622 x 750)	186 (84.4)

DIMENSIONAL DATA

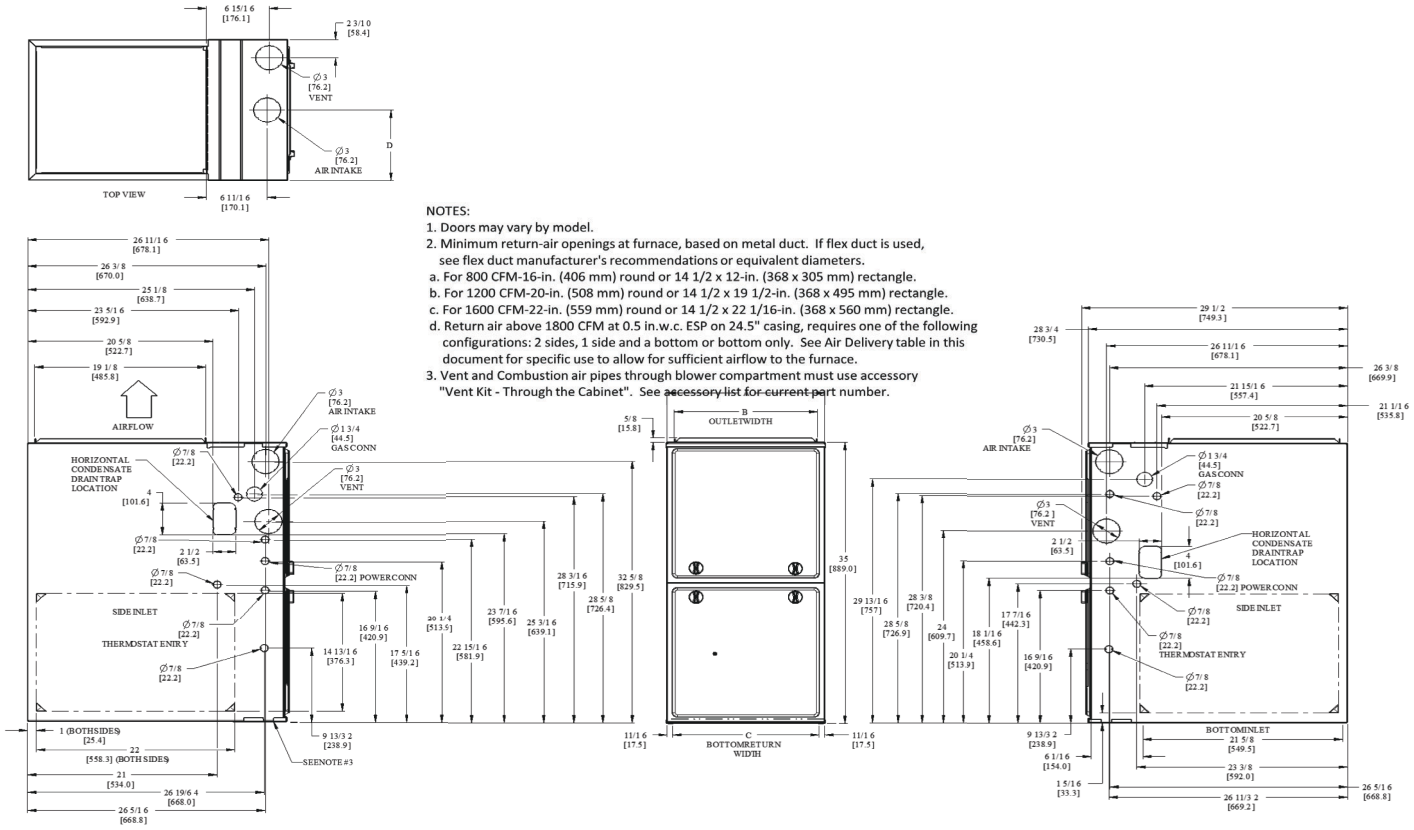

NOTES:
1. Doors may vary by model.
2. Minimum return-air openings at furnace, based on metal duct. If flex duct is used, see flex duct manufacturer's recommendations or equivalent diameters.
a. For 800 CFM-16-in. (406 mm) round or 14 1/2 x 12-in. (368 x 305 mm) rectangle.
b. For 1200 CFM-20-in. (508 mm) round or 14 1/2 x 19 1/2-in. (368 x 495 mm) rectangle.
c. For 1600 CFM-22-in. (559 mm) round or 14 1/2 x 22 1/16-in. (368 x 560 mm) rectangle.
d. Return air above 1800 CFM at 0.5 in.w.c. ESP on 24.5" casing, requires one of the following configurations: 2 sides, 1 side and a bottom or bottom only. See Air Delivery table in this document for specific use to allow for sufficient airflow to the furnace.
3. Vent and Combustion air pipes through blower compartment must use accessory "Vent Kit - Through the Cabinet". See accessory list for current part number.

NOTE: ALL DIMENSIONS IN INCH (MM)

SD5603-4 REV. -

A210796

Dimensions

FURNACE SIZE	A	B	C	D	SHIP WT. LB (KG)
	CABINET WIDTH	OUTLET WIDTH	BOTTOM INLET WIDTH	AIR INTAKE	
0401410	14-3/16 (361)	12-1/2 (319)	12-9/16 (322)	7-1/8 (181)	124 (56.2)
0401712	17-1/2 (445)	15-7/8 (403)	16 (406)	8-3/4 (222)	134 (60.8)
0601412	14-3/16 (361)	12-1/2 (319)	12-9/16 (322)	7-1/8 (181)	128 (58.1)
0601716	17-1/2 (445)	15-7/8 (403)	16 (406)	8-3/4 (222)	144 (65.3)
0801716	17-1/2 (445)	15-7/8 (403)	16 (406)	8-3/4 (222)	151 (68.5)
0802120	21 (533)	19-3/8 (492)	19-1/2 (495)	10-1/2 (267)	161 (73.0)
1002120	21 (533)	19-3/8 (492)	19-1/2 (495)	10-1/2 (267)	172 (78.0)
1202422	24-1/2 (622)	22-7/8 (581)	23 (584)	12-1/4 (311)	186 (84.4)

Manufacturer reserves the right to change, at any time, specifications and designs without notice and without obligations.

MODEL NUMBER NOMENCLATURE

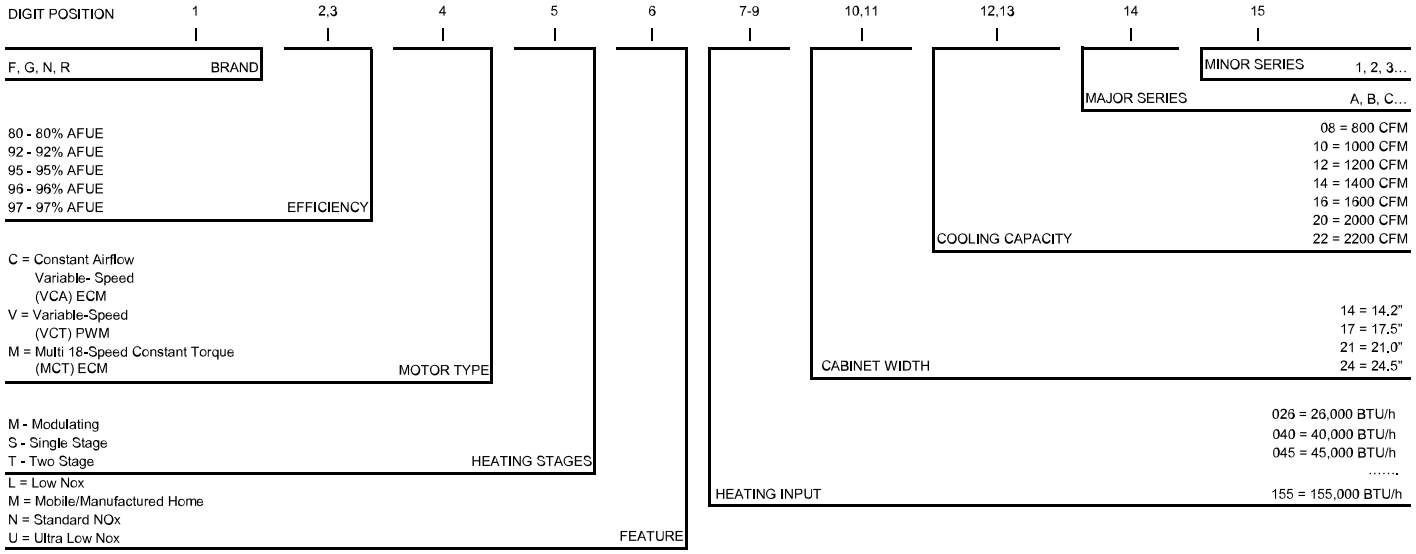

A221575

FURNACE COMPONENTS

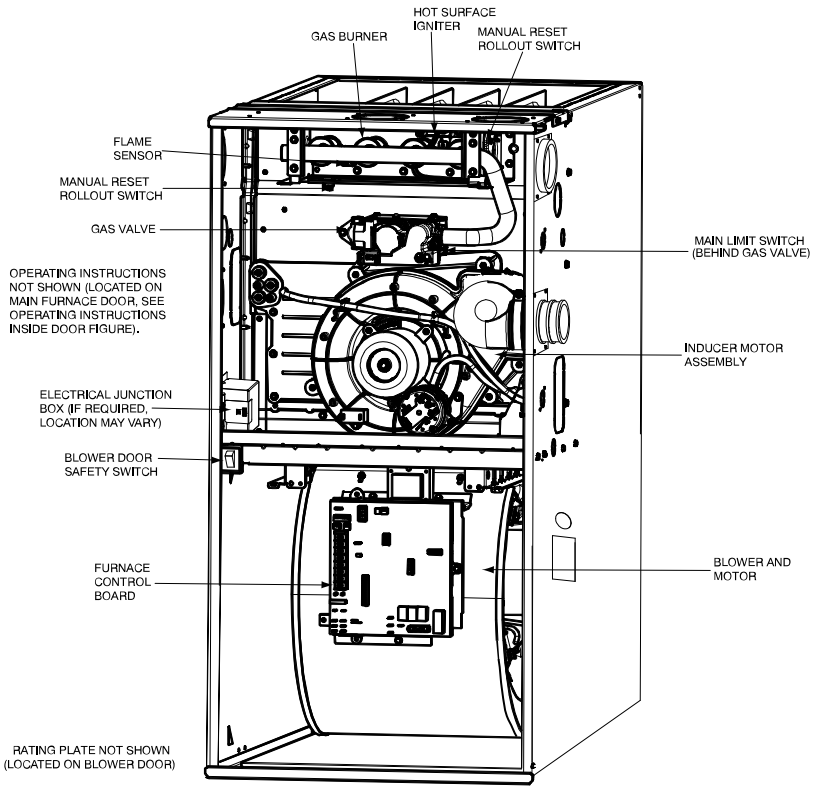

MINIMUM CLEARANCES TO COMBUSTIBLE MATERIALS

POSITION	CLEARANCE
Rear	0 (0 mm)
Front (Combustion air openings in furnace and in structure)	1 in. (25 mm)
Required for service*	24 in. (610 mm)†
All Sides of Supply Plenum*	1 in. (25 mm)
Sides	0 (0 mm)
Vent	0 (0 mm)
Top of Furnace	1 in. (25 mm)

*. Consult your local building codes
†. Recommended

The furnace should be sized to provide 100 percent of the design heating load requirement plus any margin that occurs because of furnace model size capacity increments. None of the furnace model sizes can be used if the heating load is 20,000 BTU or lower. Use Air Conditioning Contractors of America (Manual J and S); American Society of Heating, Refrigerating, and Air-Conditioning Engineers; or other approved engineering method to calculate heating load estimates and select the furnace. Excessive oversizing of the furnace may cause the furnace and/or vent to fail prematurely, customer discomfort and/or vent freezing.

Failure to follow these guidelines is considered faulty installation and/or misapplication of the furnace; and resulting failure, damage, or repairs may impact warranty coverage.

SPECIFICATIONS

UNIT SIZE		0401410	0401712	0601412	0601716	0801716	0802120	1002120	1202422
HEATING AND CAPACITY AND EFFICIENCY									
Input BTUh*		40,000	40,000	60,000	60,000	80,000	80,000	100,000	120,000
Output Capacity (BTUh)†		39,000	39,000	58,000	58,000	78,000	78,000	97,000	116,000
Certified Temperature Rise Range - °F (°C)		40–70 (22–39)	40 - 70 (22 - 39)	45 - 70 (25 - 39)	40 - 70 (22 - 39)	40 - 70 (22 - 39)	40 - 70 (22 - 39)	40 - 70 (22 - 39)	40 - 70 (22 - 39)
AFUE	Upflow	96%	96.7%	95%	97%	97%	97%	96.3%	96.1%
	Down / Horiz	95%	95%	95%	95%	95%	95%	95%	95%
ENERGY STAR® Qualification	Upflow	South	South	South	North	North	North	South	South
	Down / Horiz	South	South	South	South	South	South	South	South
AIRFLOW CAPACITY AND BLOWER DATA									
Rated Certified External Static Pressure	Heating	0.1	0.1	0.12	0.12	0.15	0.15	0.2	0.2
	Cooling	0.5	0.5	0.5	0.5	0.5	0.5	0.5	0.5
Airflow CFM @ Rated ESP (CFM)‡	Heating	685	715	925	1030	1290	1315	1695	1955
	Cooling	130-990	205-1105	175-1155	345-1565	255-1625	270-2110	400-2120	350-2245
Cooling Capacity (tons)	400 CFM/ton	2	2.5	2.5	3.5	4	5	5	5
	350 CFM/ton	2.5	3	3	4	4.5	5.5	5.5	6
Direct Drive Motor Type		Electronically Commutated Motor (ECM)							
Direct Drive Motor HP		1/2	1/2	1/2	3/4	3/4	1	1	1
Motor Full Load Amps		6.3	6.7	6.3	8.8	9.2	11.5	11.7	11.5
Heating Blwr Cntrl (Htg Off-Delay)		Adjustable: 90, 120, 150, 180 seconds							
Cooling Blwr Cntrl (Time Delay Relay)		90 seconds							
Blower Wheel Diameter x Width - In.		11 x 7	11 x 8	11 x 7	11 x 8	11 x 8	11 x 10	11 x 10	11 x 11
Air Filtration System		Field Supplied Filter							
Filter used for Certified Watt Data		325531-40**							
ELECTRICAL DATA									
Unit Volts-Hertz-Phase		115-60-1							
Operating Voltage Range (Min-Max)		104-127							
Maximum Unit Amps		7	7.4	7.1	10.1	10	13.1	13.2/11.3††	12.6
Unit Ampacity		9.7	10.2	9.8	13.6	13.4	17.3	17.4/15.0††	16.7
Maximum Wire Length									
Measure 1 way in Ft	Feet	38	36	38	27	27	33	33/24.0††	34
(M)	Meters	11.7	11.1	11.5	8.3	8.4	10.1	10/7††	10.5
Minimum Wire Size	AWG	14	14	14	14	14	12	12/14††	12
Max. Fuse/Ckt Bkr Size (Time-Delay Type Recommended)	Amps	15	15	15	15	15	20	20/15††	20
Transformer Capacity (24 VAC output)		40VA							
External Control Power Available	Heating	12VA							
	Cooling	35VA							
GAS CONTROLS									
Burners		2	2	3	3	4	4	5	6
Gas Connection Size		1/2in. NPT							
Gas Valve (Redundant)	Mfr	WhiteRodgers™							
Min. inlet pressure	(in.w.c.)	4.5 (Natural Gas)							
Max. inlet pressure	(in.w.c.)	13.6 (Natural Gas)							
Manufactured (Mobile Home Kit)		See Accessory Listing							
Ignition Device		Silicon Nitride							
Factory installed orifice		44	44	44	44	44	44	44	44
CONNECTIONS									
Communication System		None							
Thermostat Connections		G, C, W, Y/Y2, Y1, R, DHUM							
Accessory Connections		EAC-1 (115 VAC); HUM (24 VAC); 1-STG AC (via Y/Y2), 2-STG AC (via Y/Y2 and Y1)							

*. Gas input ratings are certified for elevations to 2000 ft. (610 M). In USA, For elevations above 2000 ft (610 M), reduce ratings 4 percent for each 1000 ft (305 M) above sea level. Refer to National Fuel Gas Code NFPA 54/ANSI Z223.1 Table F.4 or furnace installation instructions.

†. Capacity in accordance with U.S. Government DOE test procedures.

‡. Airflow shown is for bottom only return-air supply for the as-shipped speed tap. For air delivery above 1800 CFM, see Air Delivery table for other options. A filter is required for each return-air supply. An airflow reduction of up to 7 percent may occur when using the factory-specified 4-5/16-in. (110 mm) wide, high efficiency media filter.

**. See Accessory List for part numbers available.

††. Low Amp Kit () allows select furnaces to be installed with a 15 Amp breaker and 14 AWG wire within the listed wire length. Affected data shown as Default Value/Value with Lower Amp Kit.

Manufacturer reserves the right to change, at any time, specifications and designs without notice and without obligations.

AIR DELIVERY - CFM

Table 1 – Air Delivery - CFM (with filter)

Unit Size	Airflow Setting	Default Setting	External Static Pressure (in. w.c.)									
			0.1	0.2	0.3	0.4	0.5	0.6	0.7	0.8	0.9	1
0401410	1	Cont. Fan	270	210	140	-	-	-	-	-	-	-
	2		320	260	200	135	-	-	-	-	-	-
	3		360	305	250	190	130	-	-	-	-	-
	4		380	325	275	220	160	115	-	-	-	-
	5		430	380	335	285	235	185	125	-	-	-
	6		460	415	370	325	275	230	180	135	-	-
	7		505	460	420	375	335	290	245	195	140	-
	8		530	490	450	410	365	325	280	240	190	140
	9		540	505	465	425	385	340	300	260	210	165
	10		580	545	505	470	430	390	355	315	275	230
	11		605	570	535	495	460	420	385	350	310	270
	12		630	595	560	520	485	450	415	380	340	305
	13	Heating	685	650	620	585	550	520	485	450	415	385
	14		705	675	640	610	575	545	510	480	445	410
	15		745	715	685	655	620	590	560	530	500	465
	16		780	750	720	690	660	630	600	570	540	505
	17	Low Cooling	810	780	750	720	690	660	635	605	575	545
	18		825	795	765	740	710	680	655	625	595	565
	19		850	820	790	765	735	710	680	650	625	595
	20		890	865	840	810	785	760	730	705	675	650
	21		920	890	865	840	815	785	760	735	710	680
	22		945	920	895	865	840	815	790	765	740	715
	23		985	960	935	910	885	860	835	810	785	765
	24		1035	1010	985	960	940	915	890	865	845	820
	25	High Cooling	1080	1060	1035	1010	990	965	945	920	895	875
0401712	1	Cont. Fan	435	375	320	265	205	150	-	-	-	-
	2		470	410	355	310	255	200	140	-	-	-
	3		500	445	390	345	295	245	190	130	-	-
	4		540	490	440	395	350	305	255	205	150	-
	5		585	535	485	440	400	355	315	265	220	165
	6		625	575	530	485	445	405	365	325	280	235
	7		635	590	545	500	460	420	380	340	295	255
	8		670	625	585	540	500	465	430	390	345	305
	9	Heating	715	675	635	590	550	515	480	445	410	370
	10		760	720	680	640	600	565	530	500	465	430
	11		800	765	725	690	650	610	580	545	515	485
	12		850	815	780	745	710	670	635	605	575	545
	13	Low Cooling	895	865	830	795	760	725	690	660	630	600
	14		925	890	855	825	790	755	720	690	660	630
	15		950	920	890	855	825	790	755	725	695	665
	16		975	945	915	885	850	820	785	755	720	695
	17		1000	970	940	910	880	845	815	780	750	720
	18		1025	995	965	935	905	875	840	810	780	750
	19		1045	1020	990	960	930	900	870	835	805	780
	20		1075	1045	1020	990	960	930	900	870	840	810
	21		1100	1070	1045	1020	990	960	930	900	870	840
	22		1130	1105	1080	1050	1020	990	965	935	905	875
	23		1160	1135	1105	1080	1055	1025	995	970	940	910
	24	High Cooling	1200	1175	1150	1125	1095	1070	1035	995	960	920
	25		1240	1210	1175	1140	1105	1070	1035	995	960	920

Manufacturer reserves the right to change, at any time, specifications and designs without notice and without obligations.

Table 1 – Air Delivery - CFM (with filter) (Continued)

Unit Size	Airflow Setting	Default Setting	External Static Pressure (in. w.c.)									
			0.1	0.2	0.3	0.4	0.5	0.6	0.7	0.8	0.9	1
0601412	1	Cont. Fan	420	365	305	245	175	110	-	-	-	-
	2		435	380	325	265	200	135	-	-	-	-
	3		490	440	385	335	280	225	165	-	-	-
	4		555	510	460	410	365	315	265	205	150	-
	5		585	540	495	450	400	355	305	255	200	150
	6		645	600	555	510	470	425	380	335	290	240
	7		680	640	595	555	515	475	435	390	350	305
	8		730	690	650	610	570	535	495	455	415	375
	9		780	740	700	665	625	590	555	515	480	440
	10		790	750	715	675	640	605	570	530	495	455
	11		835	795	760	725	690	655	620	585	550	515
	12		845	810	770	735	700	670	635	600	565	530
	13		870	835	800	765	730	700	665	630	600	565
	14		900	865	830	795	760	730	695	665	630	595
	15	Heating/ Low Cooling	935	905	870	840	805	775	740	710	680	650
	16		970	935	905	870	840	810	775	745	715	685
	17		995	965	935	900	870	840	810	780	750	720
	18		1035	1005	975	945	915	885	850	825	795	765
	19		1055	1025	995	965	935	905	875	845	815	785
	20		1090	1060	1030	1000	975	945	915	885	855	830
	21		1120	1090	1060	1030	1005	975	945	920	890	865
	22		1140	1110	1080	1055	1025	1000	970	945	915	890
	23		1190	1160	1135	1105	1080	1055	1030	1000	975	950
	24		1230	1200	1175	1150	1120	1095	1070	1045	1020	995
	25	High Cooling	1255	1230	1205	1175	1155	1125	1100	1075	1050	1025
0601716	1	Cont. Fan	600	540	475	410	345	290	230	160	-	-
	2		650	590	535	475	410	355	295	240	175	-
	3		720	665	610	555	500	440	385	335	275	220
	4		760	710	655	605	550	490	440	390	340	290
	5		780	730	680	630	575	515	465	420	370	325
	6		835	790	745	695	645	595	540	490	450	405
	7		895	845	805	755	710	665	615	565	515	475
	8		960	915	875	835	790	750	705	655	605	560
	9		1005	965	925	885	845	805	765	720	675	625
	10	Heating	1040	1000	960	920	880	840	800	760	715	670
	11		1095	1055	1020	980	945	905	870	830	790	750
	12		1165	1130	1095	1060	1025	985	950	915	880	845
	13	Low Cooling	1235	1200	1165	1130	1095	1065	1030	1000	965	930
	14		1270	1240	1205	1170	1140	1110	1075	1045	1015	980
	15		1310	1275	1245	1215	1185	1150	1120	1090	1060	1030
	16		1345	1310	1280	1250	1220	1190	1155	1130	1095	1065
	17		1370	1340	1310	1280	1250	1220	1190	1160	1130	1105
	18		1410	1380	1350	1320	1290	1260	1230	1205	1175	1145
	19		1445	1415	1385	1355	1330	1300	1275	1245	1215	1190
	20		1480	1450	1420	1395	1365	1340	1310	1285	1260	1235
	21		1515	1485	1460	1430	1405	1380	1355	1325	1300	1275
	22		1550	1525	1500	1475	1450	1425	1400	1375	1350	1325
	23		1590	1565	1540	1515	1490	1470	1445	1420	1395	1370
	24		1625	1600	1575	1550	1525	1505	1475	1445	1410	1380
	25	High Cooling	1700	1665	1630	1595	1565	1530	1495	1460	1420	1385

Manufacturer reserves the right to change, at any time, specifications and designs without notice and without obligations.

Table 1 – Air Delivery - CFM (with filter) (Continued)

Unit Size	Airflow Setting	Default Setting	External Static Pressure (in. w.c.)									
			0.1	0.2	0.3	0.4	0.5	0.6	0.7	0.8	0.9	1
0801716	1	Cont. Fan	535	465	390	320	255	180	130	-	-	-
	2		590	525	460	385	325	265	200	135	-	-
	3		640	580	515	450	390	330	275	210	150	-
	4		710	650	595	535	475	420	365	315	255	195
	5		770	715	665	610	555	495	445	395	345	295
	6		830	780	725	680	625	570	520	470	425	380
	7		880	835	785	740	690	645	590	540	495	455
	8		955	910	865	820	775	730	680	630	585	540
	9		1015	975	930	890	845	805	760	715	670	625
	10		1050	1005	965	925	880	840	800	755	710	665
	11		1075	1035	995	955	915	875	835	795	750	705
	12		1150	1110	1075	1035	995	960	920	885	845	800
	13		1215	1175	1140	1105	1070	1035	995	960	925	890
	14	Low Cooling	1290	1255	1220	1185	1150	1115	1085	1050	1015	980
	15	Heating	1310	1275	1240	1205	1175	1140	1105	1075	1040	1005
	16		1350	1320	1285	1250	1220	1185	1155	1125	1090	1060
	17		1435	1400	1370	1340	1305	1275	1245	1215	1185	1155
	18		1475	1440	1410	1380	1350	1320	1285	1255	1230	1200
	19		1510	1480	1450	1420	1390	1360	1330	1300	1270	1245
	20		1545	1515	1485	1455	1425	1395	1365	1340	1310	1280
	21		1575	1545	1515	1485	1460	1430	1400	1370	1345	1315
	22		1615	1590	1560	1530	1505	1475	1445	1415	1390	1360
	23		1660	1630	1605	1570	1545	1515	1490	1460	1430	1405
	24	High Cooling	1710	1685	1655	1625	1600	1570	1540	1500	1455	1415
	25		1755	1730	1700	1665	1625	1580	1540	1500	1455	1415
0802120	1	Cont. Fan	640	550	455	365	270	180	-	-	-	-
	2		720	635	550	465	380	295	210	180	-	-
	3		825	750	670	595	515	445	365	285	220	190
	4		885	815	740	665	595	520	455	375	300	240
	5		975	910	840	770	700	635	570	510	435	370
	6		1085	1025	960	895	835	770	710	650	590	530
	7		1160	1100	1040	980	920	860	805	745	685	630
	8		1255	1200	1145	1085	1030	975	915	865	810	755
	9	Heating	1345	1290	1240	1185	1135	1080	1025	975	920	870
	10		1385	1335	1285	1235	1180	1130	1080	1025	975	925
	11		1430	1375	1325	1280	1230	1175	1125	1075	1025	980
	12	Low Cooling	1545	1495	1450	1405	1360	1315	1265	1220	1170	1125
	13		1620	1575	1530	1485	1440	1395	1350	1305	1260	1215
	14		1670	1630	1585	1540	1500	1460	1415	1370	1325	1285
	15		1725	1680	1640	1595	1555	1515	1475	1430	1390	1350
	16		1775	1735	1695	1650	1615	1575	1535	1490	1450	1410
	17		1825	1785	1745	1705	1665	1630	1590	1550	1510	1470
	18		1875	1835	1795	1760	1720	1685	1645	1610	1570	1535
	19		1925	1885	1850	1810	1775	1740	1705	1665	1630	1595
	20		1955	1920	1885	1850	1815	1780	1745	1710	1675	1640
	21		1995	1960	1925	1895	1860	1825	1795	1760	1725	1690
	22		2050	2015	1980	1950	1915	1885	1855	1820	1790	1755
	23		2105	2075	2040	2010	1980	1945	1915	1885	1850	1825
	24		2205	2170	2140	2110	2080	2045	2010	1970	1925	1880
	25	High Cooling	2280	2240	2195	2150	2110	2065	2020	1980	1935	1890

Manufacturer reserves the right to change, at any time, specifications and designs without notice and without obligations.

Table 1 – Air Delivery - CFM (with filter) (Continued)

Unit Size	Airflow Setting	Default Setting	External Static Pressure (in. w.c.)									
			0.1	0.2	0.3	0.4	0.5	0.6	0.7	0.8	0.9	1
1002120	1	Cont. Fan	740	655	570	480	400	325	245	170	-	-
	2		840	760	680	605	525	450	385	315	240	170
	3		930	860	785	710	640	565	500	435	370	305
	4		1025	955	890	820	750	685	615	555	495	435
	5		1130	1065	1000	940	875	810	750	685	620	570
	6		1225	1165	1105	1045	985	925	870	815	750	690
	7		1310	1255	1200	1145	1090	1035	975	920	870	810
	8		1395	1345	1290	1235	1185	1135	1080	1020	970	920
	9		1495	1445	1395	1345	1295	1245	1195	1145	1090	1045
	10		1590	1545	1495	1445	1400	1350	1305	1255	1210	1160
	11		1640	1595	1550	1505	1455	1410	1365	1320	1270	1225
	12	Low Cooling	1695	1650	1605	1560	1515	1470	1425	1380	1335	1290
	13	Heating	1740	1695	1650	1605	1560	1515	1475	1430	1385	1340
	14		1780	1735	1690	1650	1605	1560	1520	1475	1430	1390
	15		1840	1800	1760	1715	1675	1630	1590	1545	1505	1465
	16		1895	1855	1815	1775	1730	1690	1650	1610	1570	1530
	17		1940	1900	1860	1820	1780	1740	1700	1660	1620	1580
	18		1980	1945	1905	1865	1825	1785	1745	1705	1670	1630
	19		2035	2000	1960	1925	1885	1845	1810	1770	1730	1695
	20		2080	2045	2010	1970	1935	1895	1860	1820	1785	1745
	21		2115	2075	2040	2005	1970	1930	1895	1855	1820	1785
	22		2145	2110	2075	2040	2005	1970	1930	1895	1860	1820
	23		2185	2150	2110	2080	2040	2010	1970	1935	1900	1845
	24	High Cooling	2250	2220	2185	2150	2115	2065	2015	1955	1900	1845
	25		2320	2275	2225	2170	2120	2065	2015	1955	1900	1845
1202422	1	Cont. Fan	750	650	555	440	350	265	170	-	-	-
	2		825	730	640	545	450	360	285	195	-	-
	3		900	805	720	640	540	455	375	300	215	140
	4		995	910	825	755	675	580	505	425	360	285
	5		1085	1005	930	855	785	705	620	550	475	410
	6		1170	1090	1020	950	885	815	740	655	585	520
	7		1270	1200	1130	1065	995	940	875	800	730	660
	8		1370	1305	1235	1170	1110	1050	995	930	865	795
	9		1460	1400	1335	1270	1215	1155	1095	1045	985	920
	10		1565	1510	1450	1385	1330	1275	1220	1165	1120	1065
	11		1665	1610	1555	1495	1440	1390	1340	1285	1235	1190
	12	Low Cooling	1755	1705	1650	1600	1545	1495	1445	1395	1345	1300
	13		1800	1755	1700	1650	1595	1545	1500	1450	1400	1355
	14		1845	1800	1750	1700	1645	1595	1550	1505	1455	1410
	15		1895	1850	1805	1755	1705	1655	1610	1565	1520	1475
	16		1950	1905	1860	1810	1760	1715	1670	1625	1585	1540
	17	Heating	2005	1955	1915	1865	1820	1770	1725	1685	1645	1600
	18		2055	2010	1965	1920	1875	1830	1785	1745	1705	1665
	19		2100	2060	2020	1975	1930	1885	1845	1800	1765	1725
	20		2150	2110	2070	2025	1985	1945	1900	1860	1820	1785
	21		2205	2165	2125	2085	2045	2005	1965	1925	1885	1850
	22	High Cooling	2250	2215	2180	2140	2100	2060	2025	1985	1945	1910
	23		2305	2270	2235	2200	2165	2125	2085	2045	2000	1950
	24		2360	2325	2290	2255	2215	2170	2125	2070	2015	1965
	25		2425	2385	2345	2295	2245	2190	2140	2080	2025	1970

NOTE:

1. A filter is required for each return-air inlet. Airflow performance included 3/4-in. (19 mm) washable filter media such as contained in a factory - authorized accessory filter rack. See accessory list. To determine airflow performance without this filter, assume an additional 0.1 in. w.c. available external static pressure.
2. **Adjust the blower airflow setting as necessary for the proper air temperature rise for each installation.**
3. Airflows over 1800 CFM require bottom return, two-side return, or bottom and side return. A minimum filter size of 20" x 25" (508 x 635 mm) is required.
4. For upflow applications, air entering from one side into both the side of the furnace and a return air base counts as a side and bottom return
5. The - entry indicates unstable operating conditions

Table 2 – Airflow Settings

	Default Airflow Settings*			Designated Airflow Settings	
Unit Size	**Heating**	**High Cooling**	**Low Cooling**	**Heating**	**Const. Fan**
0401410	13	25	17	(9 - 15)	(1 - 3)
0401712	9	24	13	(5 - 10)	(1 - 3)
0601412	15	25	15	(10 - 15)	(1 - 3)
0601716	10	25	13	(6 - 11)	(1 - 8)
0801716	15	24	14	(11 - 16)	(1 - 3)
0802120	9	25	14	(6 - 12)	(1 - 8)
1002120	13	24	12	(10 - 14)	(1 - 6)
1202422	17	22	12	(12 - 17)	(1 - 3)

*. Setting #1 is the default setting for Constant Fan

TYPICAL WIRING SCHEMATIC

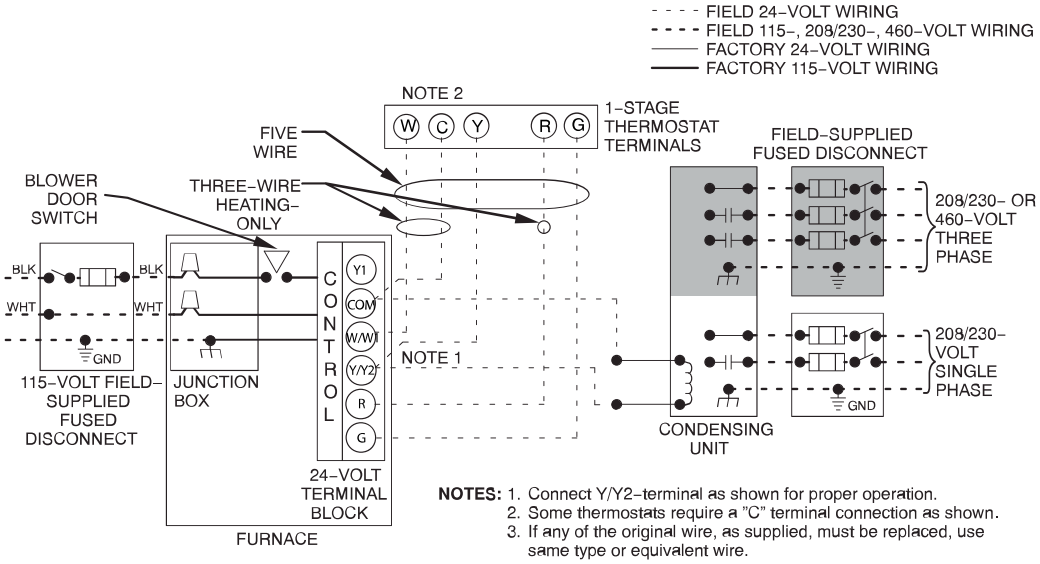

FURNACE CONTROL BOARD

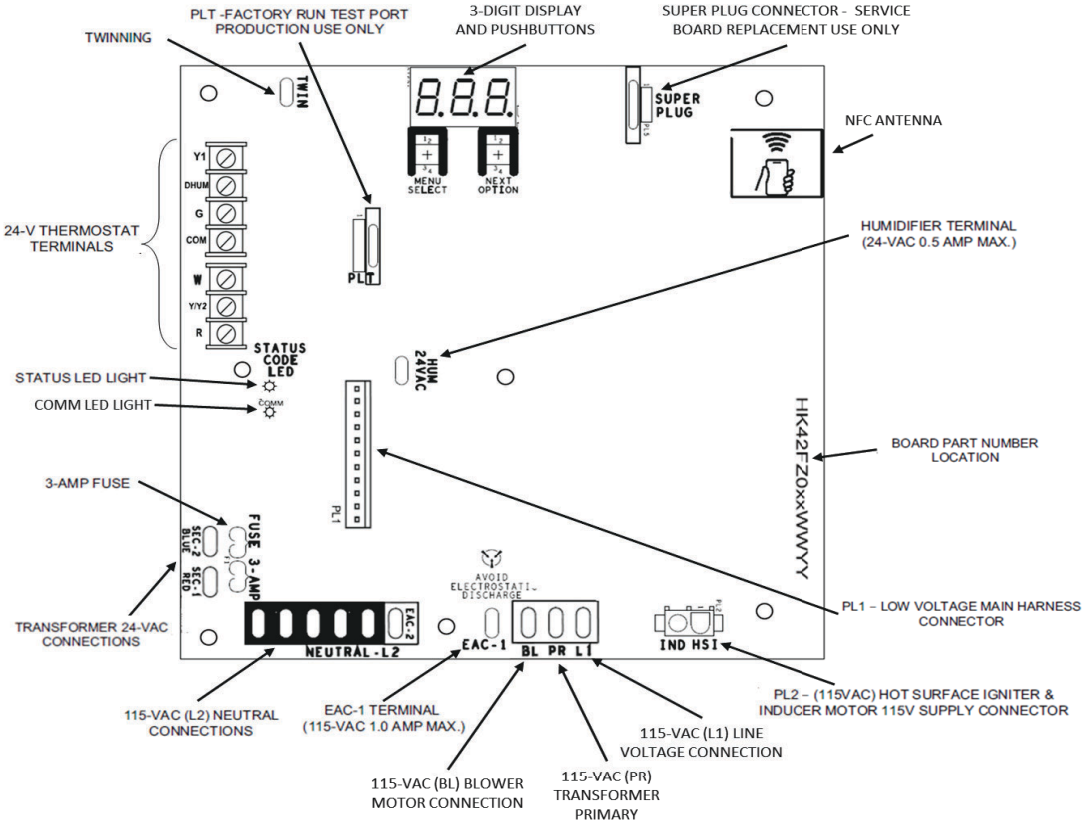

MAXIMUM ALLOWABLE EXPOSED VENT LENGTH

Maximum Allowable Exposed Vent Lengths in Unconditioned Space Insulation Table - Ft.

Winter Design Temp °F	Unit Size	40,000* BTUH									60,000 BTUH											
		Uninsulated			3/8-in. Insulation			1/2-in. Insulation			Uninsulated				3/8-in. Insulation				1/2-in. Insulation			
	Pipe Dia. in.	1 ½	2	2 ½	1 ½	2	2 ½	1 ½	2	2 ½	1 ½	2	2 ½	3	1 ½	2	2 ½	3	1 ½	2	2 ½	3
	20	20	20	20	20	50	45	20	60	50	20	30	30	25	20	75	65	60	20	85	75	65
	0	10	5	5	20	25	20	20	30	25	15	15	10	10	20	40	30	25	20	45	40	30
	-20	5			20	15	10	20	20	15	10	5			20	25	20	15	20	30	25	20
	-40				15	10	5	15	15	10	5				20	15	15	10	20	20	15	10

*. Not all model families have this size.

Winter Design Temp °F	Unit Size	80,000 BTUH														
		Uninsulated					3/8-in. Insulation					1/2-in. Insulation				
	Pipe Dia. in.	1 ½	2	2 ½	3	4	1 ½	2	2 ½	3	4	1 ½	2	2 ½	3	4
	20	15	40	40	35	30	15	50	90	75	65	15	50	70	70	70
	0	15	20	15	10	5	15	50	45	35	30	15	50	50	40	35
	-20	15	10	5			15	35	30	20	15	15	40	30	25	15
	-40	10	5				15	25	20	15	5	15	30	25	20	10

Winter Design Temp °F	Unit Size	100,000 BTUH												120,000 BTUH								
		Uninsulated				3/8-in. Insulation				1/2-in. Insulation				Uninsulated			3/8-in. Insulation			1/2-in. Insulation		
	Pipe Dia. in.	2	2 ½	3	4	2	2½	3	4	2	2½	3	4	2 ½	3	4	2 ½	3	4	2 ½	3	4
	20	20	50	40	35	20	80	95	80	20	80	105	90	10	50	40	10	75	95	10	75	105
	0	20	20	15	10	20	55	45	35	20	65	55	45	10	20	15	10	55	45	10	65	50
	-20	15	10	5		20	35	30	20	20	45	35	25	10	10		10	35	25	10	45	30
	-40	10	5			20	25	20	10	20	30	25	15	10	5		10	25	15	10	30	20

Maximum Allowable Exposed Vent Length in Unconditioned Space - Meters

Winter Design Temp °C	Unit Size	40,000* BTUH									60,000 BTUH											
		Uninsulated			3/8-in. Insulation			1/2-in. Insulation			Uninsulated				3/8-in. Insulation				1/2-in. Insulation			
	Pipe Dia. mm	38	51	64	38	51	64	38	51	64	38	51	64	76	38	51	64	76	38	51	64	76
	-7	6.1	6.1	6.1	6.1	15.2	13.7	6.1	18.3	15.2	6.1	9.1	9.1	7.6	6.1	22.9	19.8	18.3	6.1	25.9	22.9	19.8
	-18	3.0	1.5	1.5	6.1	7.6	6.1	6.1	9.1	7.6	4.6	4.6	3.0	3.0	6.1	12.2	9.1	7.6	6.1	13.7	12.2	9.1
	-29	1.5			6.1	4.6	3.0	6.1	6.1	4.6	3.0	1.5			6.1	7.6	6.1	4.6	6.1	9.1	7.6	6.1
	-40				4.6	3.0	1.5	4.6	4.6	3.0	1.5				6.1	4.6	4.6	3.0	6.1	6.1	4.6	3.0

*. Not all model families have this size.

Winter Design Temp °C	Unit Size	80,000 BTUH														
		Uninsulated					3/8-in. Insulation					1/2-in. Insulation				
	Pipe Dia. mm	38	51	64	76	102	38	51	64	76	102	38	51	64	76	102
	-7	4.6	12.2	12.2	10.7	9.1	4.6	15.2	27.4	22.9	19.8	4.6	15.2	21.3	21.3	21.3
	-18	4.6	6.1	4.6	3.0	1.5	4.6	15.2	13.7	10.7	9.1	4.6	15.2	15.2	12.2	10.7
	-29	4.6	3.0	1.5			4.6	10.7	9.1	6.1	4.6	4.6	12.2	9.1	7.6	4.6
	-40	3.0	1.5				4.6	7.6	6.1	4.6	1.5	4.6	9.1	7.6	6.1	3.0

Winter Design Temp °C	Unit Size	100,000 BTUH												120,000 BTUH								
		Uninsulated				3/8-in. Insulation				1/2-in. Insulation				Uninsulated			3/8-in. Insulation			1/2-in. Insulation		
	Pipe Dia. mm	51	64	76	102	51	64	76	102	51	64	76	102	64	76	102	64	76	102	64	76	102
	-7	6.1	15.2	12.2	10.7	6.1	24.4	28.9	24.4	6.1	24.4	32.0	27.4	3.0	15.2	12.2	3.0	22.9	28.9	3.0	22.9	32.0
	-18	6.1	6.1	4.6	3.0	6.1	16.8	13.7	10.7	6.1	19.8	16.7	13.7	3.0	6.1	4.6	3.0	16.8	13.7	3.0	19.8	15.2
	-29	4.6	3.0	1.5		6.1	10.7	9.1	6.1	6.1	13.7	10.7	7.6	3.0	3.0		3.0	10.7	7.6	3.0	13.7	9.1
	-40	3.0	1.5			6.1	7.6	6.1	3.0	6.1	9.1	7.6	4.6	3.0	1.5		3.0	7.6	4.6	3.0	9.1	6.1

Maximum Equivalent Vent Length - Ft.

NOTE: Maximum Equivalent Vent Length (MEVL) includes standard and concentric vent termination and does NOT include elbows. Use Deductions from Maximum Equivalent Vent Length to determine allowable vent length for each application.

Unit Size		40,000 [1]			60,000 [2]				80,000					100,000				120,000 [3]		
Altitude (feet)	Pipe Dia. (in)	1 ½	2	2 ½	1 ½	2	2 ½	3	1 ½	2	2 ½	3	4	2	2 ½	3	4	2 ½	3	4
	0-2000	20	85	185	20	100	175	200	15	55	130	175	200	20	80	175	200	10	75	185
	2001-3000	15	80	175		95	165	185	10	49	125	165	185	15	75	165	185		70	175
	3001-4000		70	160	16	90	155	175			115	155	175			155	175	5	65	165
	4001-4500	10		155	15	85	150	170		44	110	150	165	10	70		170	N/A	60	160
	4501-5000			145		80	145	165				145	160		65	150	165			
	5001-6000		60	130		75	140	155		41	100	135	150			140	155			155
	6001-7000	5	55	120	13	70	130	145	N/A	38	90	125	140		60	135	145		50	140
	7001-8000		50	110	10	65	120	135		36		120	125	N/A	55	125	135		46	130
	8001-9000	N/A	30	95	5	60	115	125		33	80	110	115		50	115	125		43	120
	9001-10000		25	85	N/A	55	105	115		30	75	100	105		45	100	115		39	115

Maximum Equivalent Vent Length - Meters

Unit Size		40,000 [1]			60,000 [2]				80,000					100,000				120,000 [3]		
Altitude (meters)	Pipe Dia. (mm)	38	51	64	38	51	64	76	38	51	64	76	102	51	64	76	102	64	76	102
	0-610	6.0	25.9	56.3	6.0	30.4	53.3	60.9	4.5	16.7	39.6	53.3	60.9	6.0	24.3	53.3	60.9	3.0	22.8	56.3
	611-914	4.5	24.3	53.3		28.9	50.2	56.3	3.0	14.9	38.1	50.2	56.3	4.5	22.8	50.2	56.3		21.3	53.3
	915-1219		21.3	48.7	4.8	27.4	47.2	53.3			35.0	47.2	53.3			47.2	53.3	1.5	19.8	50.2
	1220-1370	3.0		47.2	4.5	25.9	45.7	51.8		13.4	33.5	45.7	50.2	3.0	21.3		51.8	NA	18.2	48.7
	1371-1524			44.1		24.3	44.1	50.2				44.1	48.7		19.8	45.7	50.2			
	1525-1829		18.2	39.6		22.8	42.6	47.2		12.4	30.4	41.1	45.7			42.6	47.2			47.2
	1830-2134	1.5	16.7	36.5	3.9	21.3	39.6	44.1	NA	11.5	27.4	38.1	42.6		18.2	41.1	44.1		15.2	42.6
	2135-2438		15.2	33.5	3.0	19.8	36.5	41.1		10.9		36.5	38.1	NA	16.7	38.1	41.1		14.0	39.6
	2439-2743	N/A	9.1	28.9	1.5	18.2	35.0	38.1		10.0	24.3	33.5	35.0		15.2	35.0	38.1		13.1	36.5
	2744-3048		7.6	25.9	NA	16.7	32.0	35.0		9.1	22.8	30.4	32.0		13.7	30.4	35.0		11.8	35.0

1. 40K Inducer Outlet Restrictor disk (P/N 1185623; 1.25-in. (32 mm) Dia.) shipped in the loose parts bag or available through FAST Parts is required for all orientations for installations from 0–2000 ft. (0–610 M) above sea level and where TEVL is no greater than 10 ft. (3 M). Failure to use an outlet restrictor may result in flame disturbances or flame sense lockout.
2. 60K Inducer Outlet Restrictor disk (P/N 1185623; 1.25-in. (32 mm) Dia.) available through FAST Parts is required in downflow orientations for installations from 0–2000 ft. (0–610 M) above sea level and where TEVL is no greater than 5 ft. (1.5 M).
3. 120K Inducer Outlet Restrictor disk (P/N 1188589; 1.50-in. (38 mm) Dia.) available through FAST Parts is required in downflow orientations for installations from 0–2000 ft. (0–610 M) above sea level and where TEVL is no greater than 5 ft. (1.5 M).

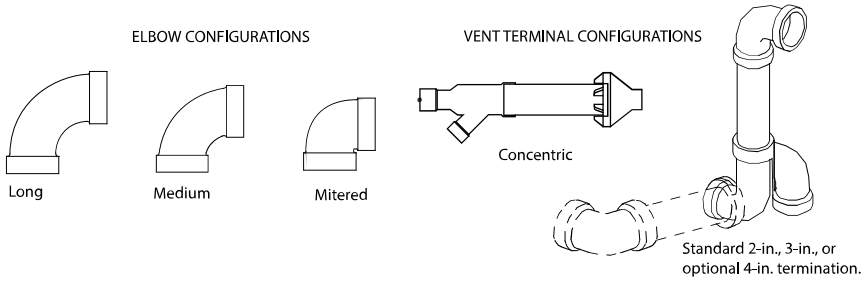

A13110

Deductions from Maximum Equivalent Vent Length - Ft. (M)

Pipe Diameter (in):	1-1/2		2		2-1/2		3		4	
Mitered 90º Elbow	8	(2.4)	8	(2.4)	8	(2.4)	8	(2.4)	8	(2.4)
Medium Radius 90º Elbow	5	(1.5)	5	(1.5)	5	(1.5)	5	(1.5)	5	(1.5)
Long Radius 90º Elbow	3	(0.9)	3	(0.9)	3	(0.9)	3	(0.9)	3	(0.9)
Mitered 45º Elbow	4	(1.2)	4	(1.2)	4	(1.2)	4	(1.2)	4	(1.2)
Medium Radius 45º Elbow	2.5	(0.8)	2.5	(0.8)	2.5	(0.8)	2.5	(0.8)	2.5	(0.8)
Long Radius 45º Elbow	1.5	(0.5)	1.5	(0.5)	1.5	(0.5)	1.5	(0.5)	1.5	(0.5)
Tee	16	(4.9)	16	(4.9)	16	(4.9)	16	(4.9)	16	(4.9)
Concentric Vent Termination	NA		0	(0.0)	NA		0	(0.0)	NA	
Standard Vent Termination	0	(0.0)	0	(0.0)	0	(0.0)	0	(0.0)	0	(0.0)

NOTE:

1. Use only the smallest diameter pipe possible for venting. Over-sizing may cause flame disturbance or excessive vent terminal icing or freeze-up.
2. NA = Not allowed. Pressure switch will not close, or flame disturbance may result.
3. Vent sizing for Canadian installations over 4500 ft (1370 M) above sea level are subject to acceptance by local authorities having jurisdiction.
4. Size both the combustion air and vent pipe independently, then use the larger size for both pipes.
5. Assume the two 45° elbows equal one 90° elbow. Wide radius elbows are desirable and may be required in some cases.
6. Elbow and pipe sections within the furnace casing and at the vent termination should not be included in vent length or elbow count.
7. The minimum pipe length is 5 ft. (2 M) linear feet (meters) for all applications.
8. Use 3-in. (76 mm) diameter vent termination kit for installations requiring 4-in. (102 mm) diameter pipe

Manufacturer reserves the right to change, at any time, specifications and designs without notice and without obligations.

Venting System Length Calculations

The Total Equivalent Vent Length (TEVL) for **EACH** combustion air or vent pipe equals the length of the venting system, plus the equivalent length of elbows used in the venting system from Deductions from Maximum Equivalent Vent Length - Ft. (M) Table.

Standard vent terminations or factory accessory concentric vent terminations count for zero deduction.

See vent system manufacturer's data for equivalent lengths of flexible vent pipe or other termination systems. **DO NOT ASSUME** that one foot of flexible vent pipe equals one foot of straight PVC/ABS DWV vent pipe.

Compare the Total Equivalent Vent Length to the Maximum Equivalent Vent Lengths in Maximum Equivalent Vent Length Table.

Example 1

A direct-vent 60,000 BTUH furnace installed at 2100 ft. (640M). Venting system includes **FOR EACH PIPE:**
70 feet (22 M) of vent pipe, 65 feet (20 M) of combustion air inlet pipe, (3) 90º long-radius elbows, (2) 45º long-radius elbows, and a factory accessory concentric vent kit.

Can this application use 2" (50 mm ND) PVC/ABS DWV vent piping?

Measure the required linear length of air inlet and vent pipe; insert the longest of the two here					70 ft. (22 M)	Use length of the longer of the vent or air inlet piping system
Add equiv length of (3) 90º long-radius elbows (use the highest number of elbows for either the vent or inlet pipe)	3	x	3 ft. (0.9 M)	=	9 ft. (2.7 M)	From Deductions from Maximum Equivalent Vent Length - Ft. (M) Table.
Add equiv length of (2) 45º long-radius elbows (use the highest number of elbows for either the vent or inlet pipe)	2	x	1.5 ft. (0.5 M)	=	3 ft. (0.9 M)	From Deductions from Maximum Equivalent Vent Length - Ft. (M) Table.
Add equiv length of factory concentric vent term					0 ft.	From Deductions from Maximum Equivalent Vent Length - Ft. (M) Table.
Add correction for flexible vent pipe, if any					0 ft.	From Vent Manufacturer's instructions; zero for PVC/ABS DWV
Total Equivalent Vent Length (TEVL)					82 ft. (25 M)	Add all of the above lines
Maximum Equivalent Vent Length (MEVL)					95 ft. (29 M)	For 2" pipe from Maximum Equivalent Vent Length Table.
Is TEVL less than MEVL?					YES	Therefore, 2" pipe MAY be used

Example 2

A direct-vent 60,000 BTUH furnace installed at 2100 ft. (640M). Venting system includes **FOR EACH PIPE:**
100 feet (30 M) of vent pipe, 95 feet (29 M) of combustion air inlet pipe, (3) 90º long-radius elbows, and a polypropylene concentric vent kit. Also includes 20 feet (6.1 M) of flexible polypropylene vent pipe, included within the 100 feet (30 M) of vent pipe.

VERIFY FROM POLYPROPYLENE VENT MANUFACTURER'S INSTRUCTIONS for the multiplier correction for flexible vent pipe.

Can this application use 60mm o.d. (2") polypropylene vent piping? If not, what size piping can be used?

Measure the required linear length of **RIGID** air inlet and vent pipe; insert the longest of the two here: 100 ft. Of rigid pipe - 20 ft. Of flexible pipe				=	80 ft. (24 M)	Use length of the longer of the vent or air inlet piping system
Add equiv length of (3) 90º long-radius elbows (use the highest number of elbows for either the vent or inlet pipe)	3	x	5 ft. (1.5 M)	=	15 ft. (4.6 M)	Example from polypropylene vent manufacturer's instructions, Verify from vent manufacturer's instructions.
Add equiv length of 45º long-radius elbows (use the highest number of elbows for either the vent or inlet pipe)	0	x		=	0 ft. (0 M)	
Add equiv length of factory concentric vent term	9	x	3.3 ft (0.9 M)	=	30 ft. (9 M)	
Add correction for flexible vent pipe, if any	2*	x	20 ft. (6.1 M)	=	40 ft. (12.2 M)	
* VERIFY FROM VENT MANUFACTURER'S INSTRUCTIONS; For example only, assume 1 meter of flexible 60mm (2") or 80mm (3") polypropylene pipe equals 2.0 meters (6.5 ft.) of PVC/ABS pipe.						
Total Equivalent Vent Length (TEVL)					165 ft. (50 M)	Add all of the above lines
Maximum Equivalent Vent Length (MEVL)					95 ft. (29 M)	For 2" pipe from Maximum Equivalent Vent Length Table.
Is TEVL less than MEVL?					NO	Therefore, 60mm (2") pipe may NOT be used; try 80mm (3")
Maximum Equivalent Vent Length (MEVL)					185 ft. (57 M)	For 3" pipe from Maximum Equivalent Vent Length Table.
Is TEVL less than MEVL?					YES	Therefore, 80mm (3") pipe MAY be used

RETURN AIR TEMPERATURE

This furnace is designed for continuous return-air minimum temperature of 60°F (15°C) db or intermittent operation down to 55°F (13°C) db such as when used with a night setback thermometer. Return-air temperature must not exceed 80°F (27°C) db. Failure to follow these return air limits may affect reliability of heat exchangers, motors and controls.

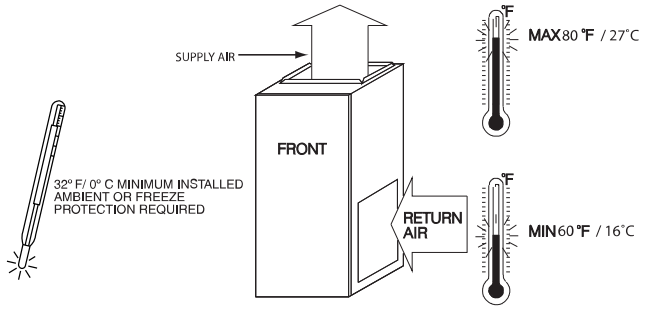

COMBUSTION-AIR PIPE FOR NON-DIRECT (1-PIPE) VENT APPLICATION

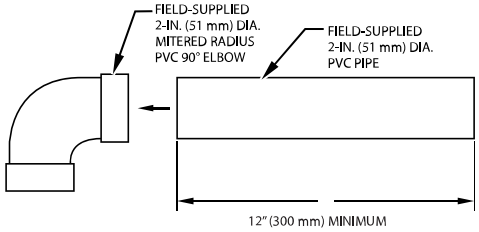

NOTE: See Installation Instructions for specific venting configurations.

DOWNFLOW SUBBASE

One base fits all furnace sizes. The base is designed to be installed between the furnace and a combustible floor when no coil box is used or when a coil box other than the manufacturer's cased coil is used. It is CSA design certified for use with the manufacturer's branded furnaces when installed in downflow applications.

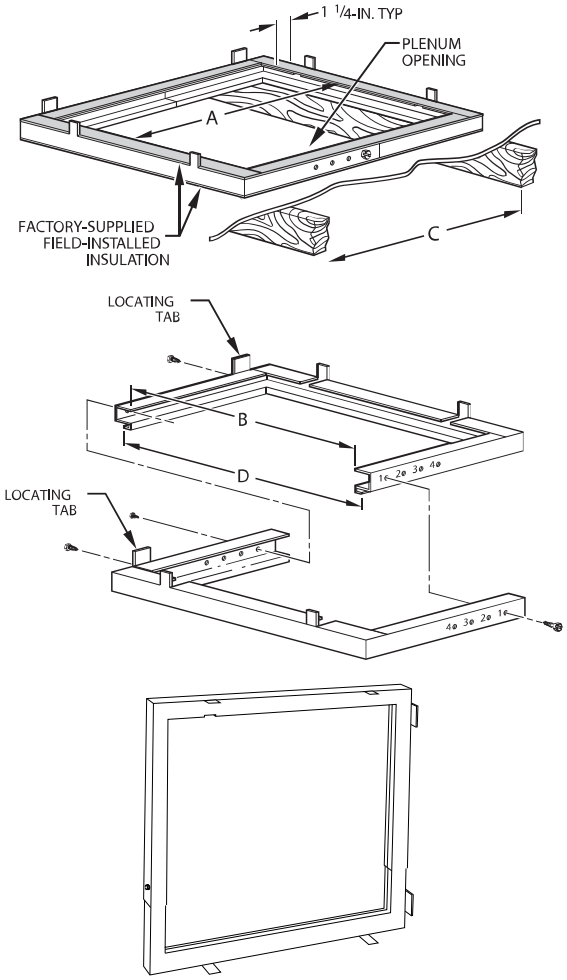

Downflow Subbase

DIMENSIONS (IN. / MM)						
FURNACE CASING WIDTH	FURNACE IN DOWNFLOW APPLICATION	PLENUM OPENING*		FLOOR OPENING		HOLE NO. FOR WIDTH ADJUSTMENT
		A	B	C	D	
14-3/16 (360)	Furnace with or without Cased Coil Assembly or Coil Box	11-3/16 (322)	19 (483)	13-7/16 (341)	20-5/8 (600)	4
17-1/2 (445)		15-1/8 (384)	19 (483)	16-3/4 (426)	20-5/8 (600)	3
21 (533)		18-5/8 (396)	19 (483)	20-1/4 (514)	20-5/8 (600)	2
24-1/2 (622)		22-1/8 (562)	19 (483)	23-3/4 (603)	20-5/8 (600)	1

*. The plenum should be constructed 1/4-in. (6 mm) smaller in width and depth than the plenum dimensions shown above.

CONCENTRIC VENT KIT

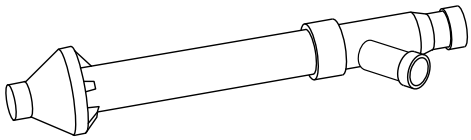

A concentric vent kit allows vent and combustion-air pipes to terminate through a single exit in a roof or side wall. One pipe runs inside the other allowing venting through the inner pipe and combustion air to be drawn in through the outer pipe.

ACCESSORIES

PART NUMBER	DESCRIPTION	0401410	0401712	0601412	0601716
NAHA001NK	Condensate Neutralizer Kit	X	X	X	X
1188594*	Gas Valve Tower Port Adapter Kit	X	X	X	X
ACG1425NCB*	External Filter Rack, 14-1/2 x 25”	X	-	X	-
ACG1625NCF*	External Filter Rack, 16 x 25”	-	X	-	X
325531-402*	Washable filter, 3/4” x 16” x 25”	X	X	X	X
NAHB00101CA	Coil Adapter Kits - No Offset	X	X	X	X
NAHB00201CA	Coil Adapter Kits - Single Offset	X	X	X	X
NAHB00301CA	Coil Adapter Kits - Double Offset	X	X	X	X
NAHA01401RA	Return Air Base (Upflow Applications) 14” wide	X	-	X	-
NAHA01701RA	Return Air Base (Upflow Applications) 17-1/2” wide	-	X	-	X
NAHA00101VC	Vent Kit - Through the Cabinet	X	X	X	X
NAHB00101CT	External Trap Kit	X	X	X	X
NAHA00110DA	CPVC to PVC Drain Adapters - 1/2” CPVC to 3/4” PVC (10 Pack)	X	X	X	X
NAHA002CV	Vent Terminal - Concentric - 2” (51 mm)	X	X	X	X
NAHA001CV	Vent Terminal - Concentric - 3” (76 mm)	-	-	X	X
NAHA00301VT	Vent Terminal Bracket - 2” (51 mm)	X	X	X	X
NAHA00401VT	Vent Terminal Bracket - 3” (76 mm)	-	-	X	X
NAHA00101CK	Polypropylene Inlet Air Pipe Coupling	X	X	X	X
NAHA00101HV	Horizontal Trap Grommet - Direct Vent	X	X	X	X
NAHA00101HH	Freeze Protect Kit - Condensate Drain Line Tape	X	X	X	X
NAHA00201HH	Freeze Protect Kit - Condensate Trap with Heat Pad	X	X	X	X
NAHA01101SB	Downflow Furnace Base Kit for Combustible Floors	X	X	X	X
AGAGC9NPS01D*	Gas Conversion Kit - Nat to LP†	X	X	X	X
AGAGC9PNS01D*	Gas Conversion Kit - LP to Nat†	X	X	X	X
AGAGCAMHC01A	Manufactured Home Kit - Gas Conversion†	X	X	X	X
AGATWNPUA01A	Twinning Kit	-	-	-	X

*. Order through FAST Parts.
†. Factory authorized and filed installed. Gas conversion kits are CSA recognized.
X = Accessory

ACCESSORIES (continued)

PART NUMBER	DESCRIPTION	0801716	0802120	1002120	1202422
NAHA001NK	Condensate Neutralizer Kit	X	X	X	X
1188594*	Gas Valve Tower Port Adapter Kit	X	X	X	X
ACG1625NCF*	External Filter Rack, 16 x 25”	X	-	-	-
ACG2025NCJ*	External Filter Rack, 20 x 25”	-	X	X	-
ACG2424NCL*	External Filter Rack, 24-1/2 x 24”	-	-	-	X
325531-402*	Washable filter, 3/4” x 16” x 25”	X	-	-	-
325531-403*	Washable filter, 3/4” x 21” x 25”	-	X	X	-
325531-404*	Washable filter, 3/4” x 24” x 25”	-	-	-	X
NAHB00101CA	Coil Adapter Kits - No Offset	X	X	X	X
NAHB00201CA	Coil Adapter Kits - Single Offset	X	X	X	X
NAHB00301CA	Coil Adapter Kits - Double Offset	X	X	X	X
NAHA01701RA	Return Air Base (Upflow Applications) 17-1/2” wide	X	-	-	-
NAHA02101RA	Return Air Base (Upflow Applications) 21” wide	-	X	X	-
NAHA02401RA	Return Air Base (Upflow Applications) 24-1/2 wide	-	-	-	X
NAHA00101VC	Vent Kit - Through the Cabinet	X	X	X	X
NAHB00101CT	External Trap Kit	X	X	X	X
NAHA002CV	Vent Terminal - Concentric - 2” (51 mm)	X	X	X	X
NAHA001CV	Vent Terminal - Concentric - 3” (76 mm)	X	X	X	X
NAHA00301VT	Vent Terminal Bracket - 2” (51 mm)	X	X	X	X
NAHA00401VT	Vent Terminal Bracket - 3” (76 mm)	X	X	X	X
NAHA00101CK	Polypropylene Inlet Air Pipe Coupling	X	X	X	X
NAHA00101HV	Horizontal Trap Grommet - Direct Vent	X	X	X	X
NAHA00101HH	Freeze Protect Kit - Condensate Drain Line Tape	X	X	X	X
NAHA00201HH	Freeze Protect Kit - Condensate Trap with Heat Pad	X	X	X	X
NAHA00110DA	CPVC to PVC Drain Adapters - 1/2” CPVC to 3/4” PVC (10 Pack)	X	X	X	X
NAHA01101SB	Downflow Furnace Base Kit for Combustible Floors	X	X	X	X
AGAGC9NPS01D*	Gas Conversion Kit - Nat to LP†	X	X	X	X
AGAGC9PNS01D*	Gas Conversion Kit - LP to Nat†	X	X	X	X
AGAGCAMHC01A	Manufactured Home Kit - Gas Conversion†	X	X	X	X
AGATWNPUA01A	Twinning Kit	X	X	X	X
NAHA00101PC	Low Amp Kit - Allows 15 AMP Breaker‡	-	-	X	-

*. Order through FAST Parts.
†. Factory authorized and filed installed. Gas conversion kits are CSA recognized.
X = Accessory
‡. Low Amp Kit (NAHA00101PC) allows select furnaces to be installed with a 15 Amp Breaker and 14 AWG wire within the listed wire length. Affected data shown as Default Value/Value with Lower Amp Kit.

ORIFICE

Part Number	Gas Type	Orifice Size
1185612	Natural	42
1176928	Natural	43
1185574	Natural	44
1177213	Natural	45

Part Number	Gas Type	Orifice Size
1183809	Natural	46
1185613	Natural	47
1185614	Natural	48

Part Number	Gas Type	Orifice Size
1184256	Propane	54
1185615	Propane	55
1185616	Propane	56
1185617	Propane	1.25 mm
1185618	Propane	1.30 mm

© 2026 Carrier. All rights reserved.

Manufacturer reserves the right to change, at any time, specifications and designs without notice and without obligations.