PDD4
13.4 SEER2 Single-Package Dual Fuel System with R-410A Refrigerant Single Phase 2-5 Nominal Tons (Sizes 24-60)

Comfortmaker®
Air Conditioning & Heating

Product Data

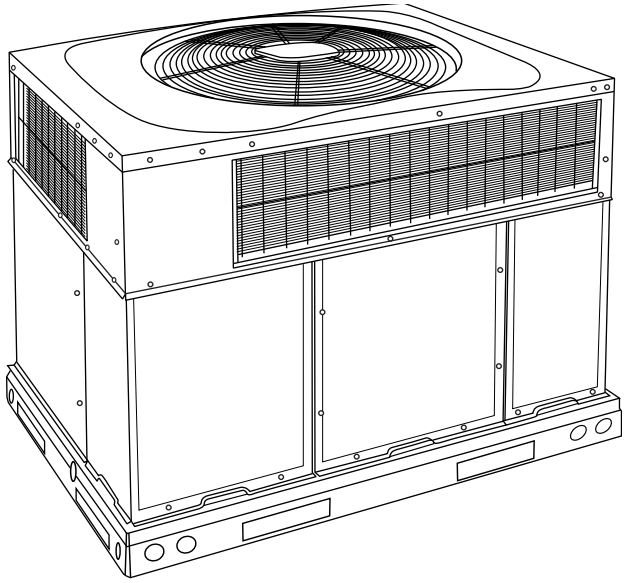

A09034

Fig. 1 – Unit PDD4

Single-Packaged Products with Energy-Saving Features and R-410A refrigerant.

- 13.4 SEER2
- 11.05 EER2
- 6.7 HSPF2
- 81.0% AFUE
- ECM Motor-Standard
- Direct Spark Ignition
- Dehumidification Feature
- Dense Wire Condenser Coil Guard-Standard

Features/Benefits

One-piece heating and cooling units with low sound levels, easy installation, low maintenance, and dependable performance.

Easy Installation

Factory-assembled package is a compact, fully self-contained, combination gas heating/electric heating and cooling unit that is prewired, pre-piped, and pre-charged for minimum installation expense. These units are available in a variety of standard and optional heating/cooling size combinations with voltage options to meet residential and light commercial requirements. Units are lightweight and install easily on a rooftop or at ground level. The high tech composite base eliminates rust problems associated with ground level applications.

Innovative Unit Base Design

On the inside a high-tech composite material will not rust and incorporates a sloped drain pan which improves drainage and helps inhibit mold, algae and bacterial growth. On the outside metal base rails provide added stability as well as easier handling and rigging.

Convertible Duct Configuration

Unit is designed for use in either downflow or horizontal applications. Each unit is converted from horizontal to downflow and includes horizontal duct covers. Downflow operation is provided in the field to allow vertical ductwork connections. The basepan seals on the bottom openings to ensure a positive seal in the vertical airflow mode.

Energy-saving, direct spark ignition saves gas by operating only when the room thermostat calls for heating. Standard units are furnished with natural gas controls. A low-cost field installed kit for propane conversion is available for all units.

Low NOx units are designed for California installations and meet 40 ng/J NOx emissions. Can be installed in air quality management districts with a 40 ng/J NOx emissions requirement.

Durable, dependable components

Scroll Compressors are designed for high efficiency. Each compressor is hermetically sealed against contamination to help promote longer life and dependable operation. Each compressor also has vibration isolation to provide quieter operation. All compressors have internal high pressure and overcurrent protection.

Monoport inshot burners produce precise air-to-gas mixture, which provides for clean and efficient combustion. The large monoport on the inshot (or injection type) burners seldom, if ever, requires cleaning. All gas furnace components are accessible in one compartment.

Turbo-tubulart heat exchangers are constructed of stainless steel for corrosion resistance and optimum heat transfer for improved efficiency. The tubular design permits hot gases to make multiple passes across the path of the supply air.

In addition, dimples located on the heat exchanger walls force the hot gases to stay in close contact with the walls, improving heat transfer.

ECM Motor is standard on all models.

Direct-drive, PSC (Permanent Split Capacitor) condenser-fan motors are designed to help reduce energy consumption and provide for cooling operation down to 40°F (4.4°C) outdoor temperature. Low ambient kit is available as a field installed accessory.

Refrigerant system is designed to provide dependability. Liquid filter driers are used to promote clean, unrestricted operation. Each unit leaves the factory with a full refrigerant charge. Refrigerant service connections make checking operating pressures easier.

High and Low Pressure Switches provide added reliability for the compressor.

Indoor and Outdoor coils are computer-designed for optimum heat transfer and efficiency. The indoor coil is fabricated from aluminum indoor coils and aluminum fins and is located inside the unit for protection against damage. The outdoor coil is internally mounted on the top tier of the unit.

Low sound ratings ensure a quiet indoor and outdoor environment with sound ratings as low as 69.9 dBA.

Easy to service cabinets provide easy multiple panel accessibility to serviceable components during maintenance and installation. The base with integrated drain pan provides easy ground level installation with a mounting pad. A nesting feature ensures a positive basepan to roof curb seal when the unit is roof mounted. A convenient 3/4-in. (19 mm) wide perimeter flange makes frame mounting on a rooftop easy.

Standard horizontal metal duct covers with insulation come with the unit and cover the horizontal duct openings. These can be left in place if the units are converted to downflow.

Itegrated Gas Control (IGC) board provides safe and efficient control of heating and simplifies trouble-shooting through its built-in diagnostic function.

Cabinets are constructed of heavyduty, phosphated, zinc-coated prepainted steel capable of withstandicg 500 hours in salt spray. Interior surfaces of the evaporator/heat exchanger compartment are insulated with cleanable semi-rigid insulation board, which keeps the conditioned air from being affected by the outdoor ambient temperature and provides improved indoor air quality. (Conforms to American Society of Heating, Refrigeration and Air Conditioning Engineers No. 62P.) The sloped drain pan minimizes standing water in the drain. An external drain is provided.

Short-Cycling protection for the compressor is incorporated into our defrost control board ensuring a five minute delay (+/-2 minutes) before restarting compressor after shutdown for any reason.

Limited Warranty

- Default 3-year no hassle limited warranty
- Default 20-year heat exchanger limited warranty
  - Lifetime limited warranty on heat exchanger with timely registration. Equipment must be registered within 90 days of original installation, except in jurisdictions where warranty benefits cannot be conditioned on registration.

* Applies to original purchaser/homeowner and 20 years to subsequent owners.

- Default 5-year parts limited warranty (including compressor and coil)
  - 10-year parts limited warranty (including compressor and coil) with timely registration. Equipment must be registered within 90 days of original installation, except in jurisdictions where warranty benefits cannot be conditioned on registration.

* Applies to original purchaser/homeowner and 5 years to subsequent owners.

See Warranty certificate for complete details

Table of Contents

Features/Benefits 1
Model Number Nomenclature 3
Cooling Capacities and Efficiencies 4
Heat Pump Heating Capacities and Efficiencies 4
Gas Heating Capacities and Efficiencies, Single Phase Models Models4
A-Weighted Sound Power Level (dBA) 7
Unit Dimensions 9
Accessory Dimensions 11
Selection Procedure (with example) 12
Typical Piping and Wiring 26
Application Data 27
Balance Point Worksheet 28
Electrical Data 29
Controls 32
Guide Specifications 33

Use of the AHRI Certified TM Mark indicates a manufacturer's participation in the program For verification of certification for individual products, go to

For California Residents:

This furnace does not comply with SCAQMD Rule 1111 or SJVAPCD Rule 4905, which places a NOx emission limit of 14 ng/J. Therefore, this unit is not eligible to be installed in the South Coast Air Quality Management District (SCAQMD) nor the San Joaquin Valley Air Pollution Control District (SJVAPCD).

Model Number Nomenclature

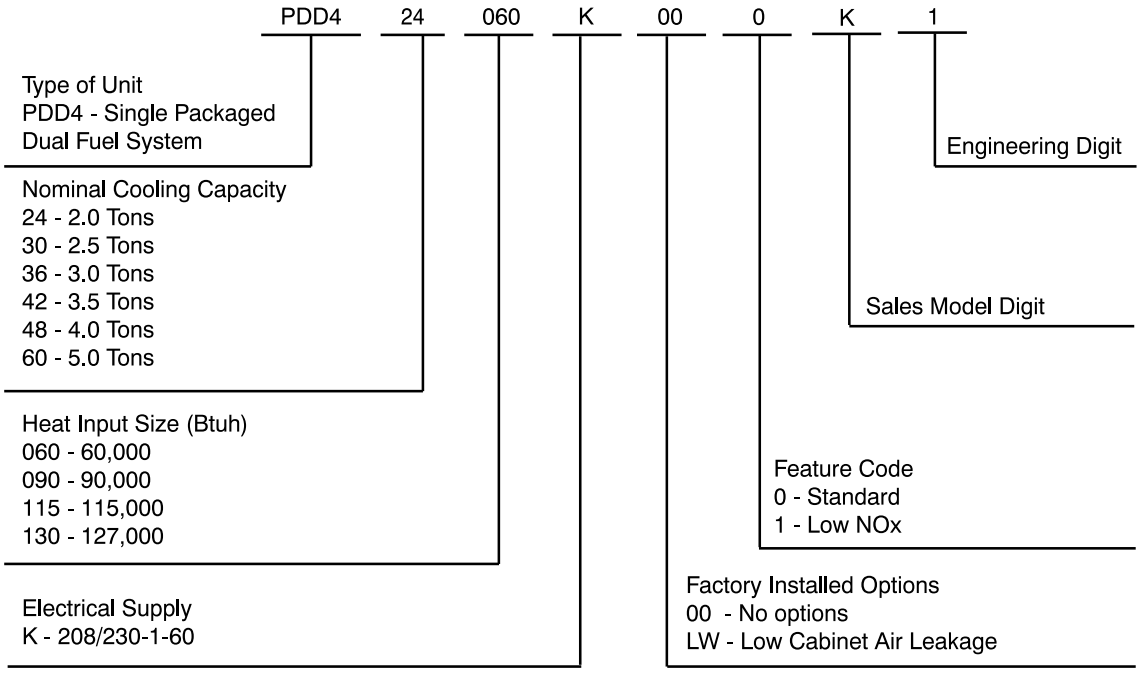

SAP Ordering No.	Volts-Phase (60 HZ)	Nominal Cooling Capacity (Btuh)	Nominal Heating Input (Btuh)	Approx Ship Wt (LBS)
PDD424060K**1K	208/230-1	24,000	60,000	373
PDD430060K**1K	208/230-1	30,000	60,000	406
PDD436090K**1K	208/230-1	36,000	90,000	461
PDD442090K**1K	208/230-1	42,000	90,000	477
PDD448090K**1K	208/230-1	48,000	90,000	491
PDD448115K**1K	208/230-1	48,000	115,000	491
PDD460115K**1K	208/230-1	60,000	115,000	554
PDD460130K**1K	208/230-1	60,000	127,000	554
Low NOx Units				
PDD424060K**1K	208/230-1	24,000	60,000	373
PDD430060K**1K	208/230-1	30,000	60,000	406
PDD436090K**1K	208/230-1	36,000	90,000	461
PDD442090K**1K	208/230-1	42,000	90,000	477
PDD448090K**1K	208/230-1	48,000	90,000	491
PDD448115K**1K	208/230-1	48,000	115,000	491
PDD460115K**1K	208/230-1	60,000	115,000	554
PDD460130K**1K	208/230-1	60,000	127,000	554

** = 00 - No Options
LW - Low cabinet air leakage

Manufacturer reserves the right to change, at any time, specifications and designs without notice and without obligations.

Cooling Capacities and Efficiencies

UNIT SIZE	NOMINAL TONS	STANDARD CFM	COOLING CAPACITY	EER2	SEER2
24	2	750	22200	11.05	13.4
30	2.5	950	29400	11.05	13.4
36	3	1150	33400	11.05	13.4
42	3.5	1350	40000	11.05	13.4
48	4	1600	47000	11.05	13.4
60	5	1750	55000	11.05	13.4

Heat Pump Heating Capacities and Efficiencies

UNIT	HEATING CAPACITY (BTUH) @ 47°F (8.3°C)	COP @ 47°F (8.3°C)	HEATING CAPACITY (BTUH) @ 17°F (-8.3°C)	COP @ 17°F (-8.3°C)	HSPF2
24	24000	3.7	12500	2.20	6.7
30	30000	3.6	17700	2.30	6.7
36	35000	3.8	18400	2.30	6.7
42	40000	3.7	22400	2.30	6.7
48	46000	3.7	25000	2.30	6.7
60	57000	3.5	32200	2.40	6.7

LEGEND
dBA-Sound Levels (decibels)
db—Dry Bulb
SEER2—Seasonal Energy Efficiency Ratio
wb—Wet Bulb
COP-Coefficient of Performance
HSPF2-Heating Season Performance Factor
* Air Conditioning, Heating & Refrigeration Institute.
**At “A” conditions-80°F (26.7°C) indoor db/67°F (19.4°C) indoor wb & 95°F (35°C) outdoor db.
{ Rated in accordance with U.S. Government DOE Department of Energy) test procedures and/or AHRI Standards 210/240.

Notes:
1. Ratings are net values, reflecting the effects of circulating fan heat.
Ratings are based on:
Cooling Standard: 80°F (26.7°C) db, 67°F (19.4°C) wb indoor entering-air temperature and 95°F (35°C) db outdoor entering-air temperature.
2. Before purchasing this appliance, read important energy cost and efficiency information available from your retailer.

Gas Heating Capacities and Efficiencies, Single Phase Models Models

UNIT SIZE	HEATING INPUT (Btuh)	OUTPUT CAPACITY (Btuh)	TEMPERATURE RISE RANGE F (C)	AFUE (%)
24060 30060	60,000	49,000	25-55 (13.9-30.6)	81.0
36090 42090 48090	90,000	74,000	35-65 (19.4-36.1)	
48115 60115	115,000	94,000	30-60 (16.7-33.3)	
60130	130,000	104,000	35-65 (19.4-36.1)	

LEGEND
AFUE—Annual Fuel Utilization Efficiency
NOTE: Before purchasing this appliance, read important energy cost and efficiency information available from your retailer.

Physical Data

Unit Size	24060	30060	36090	42090
Nominal Capacity - ton	2	2.5	3	3.5
Shipping Weight (lb) Shipping Weight (kg)	373 169	406 184	461 209	477 216
Compressor / Quantity	Scroll / 1			
Refrigerant	R-410A			
Refrigerant Quantity (lb) Refrigerant Quantity (kg)	7.25 3.3	11.5 5.2	10.4 4.7	10.5 4.8
Refrigerant Metering Device	Indoor TXV, Outdoor Dual Accuraters			
Orifice OD (in) Orifice OD (mm)	0.032 (2) 0.81 (2)	0.035 (2) 0.89 (2)	0.040 (2) 1.02 (2)	0.046 (2) 1.17 (2)
Outdoor Coil Rows… Fins/in, Face Area (sq. ft.)	 1…21 18.8	 2…21 18.8	 1…21 23.3	 1…21 23.3
Outdoor Fan Nominal Airflow (cfm) Diameter (in.) Diameter (mm) Motor hp (rpm)	 3000 24 610 1/10 (810)	 3200 24 610 1/5 (810)	 3500 26 660 1/5 (810)	 3500 26 660 1/5 (810)
Indoor Coil Rows… Fins/in, face area (sq. ft.)	 3…15 3.7	 3…17 3.7	 3…17 4.7	 3…17 4.7
Indoor Blower Nominal Airflow (CFM) Size (in.) Size (mm) Motor hp	 750 10 x 10 254 x 254 1/2	 950 10 x 10 254 x 254 1/2	 1150 11 x 10 279 x 254 1/2	 1350 11 x 10 279 x 254 3/4
Furnace Section* Burner Orifice 1-Phase Natural Gas Qty…Drill Size 1-Phase Propane Gas Qty…Drill Size	 3…44 3…55	 3…44 3…55	 3…38 3…53	 3…38 3…53
High Pressure Switch (psig) Cutout Reset (Auto)	650 +/- 15 420 +/- 25			
Loss-of-Charge/Low Pressure Switch (psig) Cutout Reset (Auto)	20 +/- 5 45 +/- 10			
Return Air Filters†‡ disposable	2 each 20x12x1 in. 508x305x25 mm		1 each 24x16x1 in. 610x406x25 mm 24x14x1 in. 610x356x25 mm	

*. Based on altitude of 0 to 2000 ft (0-610 m).
†. Required filter sizes shown are based on the larger of the AHRI (Air Conditioning Heating and Refrigeration Institute) rated cooling airflow or the heating airflow velocity of 300 to 350 ft/minute for high-capacity type. Air filter pressure drop for non-standard filters must not exceed 0.08 IN. W.C.
‡. If using accessory filter rack refer to filter rack installation instructions for correct filter size and quantity.

Manufacturer reserves the right to change, at any time, specifications and designs without notice and without obligations.

Physical Data Cont'd)

Unit Size	48090	48115	60115	60130
Nominal Capacity - ton	4	4	5	5
Shipping Weight (lb) Shipping Weight (kg)	491 223	491 223	554 251	554 251
Compressor / Quantity	Scroll / 1			
Refrigerant	R-410A			
Refrigerant Quantity (lb) Refrigerant Quantity (kg)	10.0 4.5		13.25 6.0	
Refrigerant Metering Device	Indoor Accurater, Outdoor Dual Accuraters		Indoor TXV, Outdoor Dual Accuraters	
Orifice ID (in) Orifice ID (mm)	0.080 (1) 2.03 (1)		N/A	
Orifice OD (in) Orifice OD (mm)	0.046 (2) 1.17 (2)		0.046 (2) 1.17(2)	
Outdoor Coil Rows… Fins/in, Face Area (sq. ft.)	 2…21 13.6		 2…21 17.5	
Outdoor Fan Nominal Airflow (CFM) Diameter (in.) Diameter (mm) Motor hp Motor (rpm)	 3500 26 660 1/5 (810)		 3500 26 660 1/5 (810)	
Indoor Coil Rows… Fins/in, face area (sq. ft.)	 3…17 5.6			
Indoor Blower Nominal Airflow (cfm) Size (in.) Size (mm) Motor hp	 1600 11 x 10 279 x 254 1		 1750 11 x 10 279 x 254 1	
Furnace Section* Burner Orifice 1 Phase Natural Gas Qty…Drill Size 1 Phase Propane Gas Qty…Drill Size	 3…38 3…53	 3…33 3…51	 3…33 3…51	 3…31 3…49
High Pressure Switch (psig) Cutout Reset (Auto)	 650 +/- 15 420 +/- 25			
Loss-of-Charge/Low Pressure Switch (psig) Cutout Reset (Auto)	 20 +/- 5 45 +/- 10			
Return Air Filters† ‡ disposable	1 each 24x16x1 (610x406x25) 24x18x1 (610x457x25)			

*. *Based on altitude of 0 to 2000 ft (0-610 m).

†. Required filter sizes shown are based on the larger of the AHRI (Air Conditioning Heating and Refrigeration Institute) rated cooling airflow or the heating airflow velocity of 300 to 350 ft/minute for high-capacity type. Air filter pressure drop for non-standard filters must not exceed 0.08 IN. W.C.

‡. If using accessory filter rack refer to filter rack installation instructions for correct filter size and quantity.

A-Weighted Sound Power Level (dBA)

UNIT SIZE	STANDARD RATING (dBA)	TYPICAL OCTAVE BAND SPECTRUM (dBA without tone adjustment)						
		125	250	500	1000	2000	4000	8000
24	69.9	59.0	56.6	57.9	60.9	55.3	51.7	44.0
30	73.1	55.9	57.0	63.1	63.7	59.7	54.2	48.8
36	72.0	52.2	56.7	62.7	62.6	60.0	55.3	49.3
42	73.7	54.5	61.3	63.5	63.5	60.5	58.2	53.3
48	74.0	56.9	59.3	63.9	64.5	61.7	55.4	47.4
60	74.7	60	61.6	63.8	63.5	62.0	59.3	50.3

NOTE: Tested in accordance with AHRI 270 but not listed with AHRI.

Accessories

PART NUMBER	DESCRIPTION	USED WITH
CPRFCURB011B00**	Roof Curb, 14-in. High	24 - 60
CPRFCURB013B00	Roof Curb, 14-in. High	36 - 60
CPADCURB001A00*	Adapter Curb	24 - 30
CPADCURB002A00*	Adapter Curb	36 - 60
NPCONADP001A00	For 18-in. round duct (use with curb CPRFCURB011B00)	Small Curb
NPCONADP002A00	For 18-in. round duct (use with curb CPRFCURB013B00)	Large Curb
GCPGSKTKIT001A00	Gasket Kit for existing roof curb with new base rail	All
CPECOMZR007B00	Dedicated Vertical Economizer - Internal with solid state controller, gear driven, fully modulating damper, spring return actuator, up to 50% barometric relief, supply and dry bulb outdoor air sensors. Includes filter rack with 1” filters.	24-30
CPECOMZR008A00		36-42
CPECOMZR009A00		48-60
CPECOMZR010A00	Dedicated Horizontal Economizer - Internal with solid state controller, fully modulating damper, spring return actuator, supply and dry bulb outdoor air sensor, and low ambient compressor lockout switch included. Includes filter rack with 1-inch filters.	24-30
CPECOMZR011A00		36-42
CPECOMZR012A00		48-60
CPRLYKIT001A00	Economizer relay for heat pumps	48-60
AXB078ENT†	Outdoor Enthalpy Control	ALL
CPMANDPR007A00	Manual Outside Air Damper - (Includes filter rack and 1” filter, same as CPFILTRK kit)	24-30
CPMANDPR008A00		36-42
CPMANDPR009A00		48-60
CPFILTRK007A00	Internal Filter Rack	24-30
CPFILTRK008A00		36-42
CPFILTRK009A00		48-60
CPCRKHTR008A00	240V Crankcase Heater	24 - 36
CPCRKHTR004A00		42 - 60
CPLOWAMB001A00‡	Low Ambient Control	ALL
NRTIMEGD001A00	Five Minute Compressor Delay	ALL
CPHSTART002A00	PTC Compressor Start Assist Kit (single phase only)	ALL
NPLPCONV013C00	Natural Gas to Propane Conversion Kit (0 - 2000 ft)	ALL
NPLPCONV014C00	Natural Gas to Propane Conversion Kit (2001 - 6000 ft)	
NPNGCONV004C00	Propane to Natural Gas Conversion Kit (0 - 2000 ft)	
CPLOUVER009A00	Louver Kit	48
CPLOUVER022A00		24-30
CPLOUVER017A00		60
CPLOUVER019A00		36-42
NPDUCFLG002A00	Square to Round (1 set of 2, use with horizontal duct flanges only)	24 - 48
1184479	Relay Pilot Duty	ALL

* Can also be used when replacing other manufacturer’s older generation units that contain a composite base without a metal base rail.
** CPRFCURB011B00 can be used with 42-60 size units with same overhang.
† Outdoor enthalpy available as field installed accessory; Filter rack and 1” filter, same as CPFILTRK kit
‡ Relay 1184479 is required with this Low Ambient Control when used in heat pump application.

ECONOMIZER

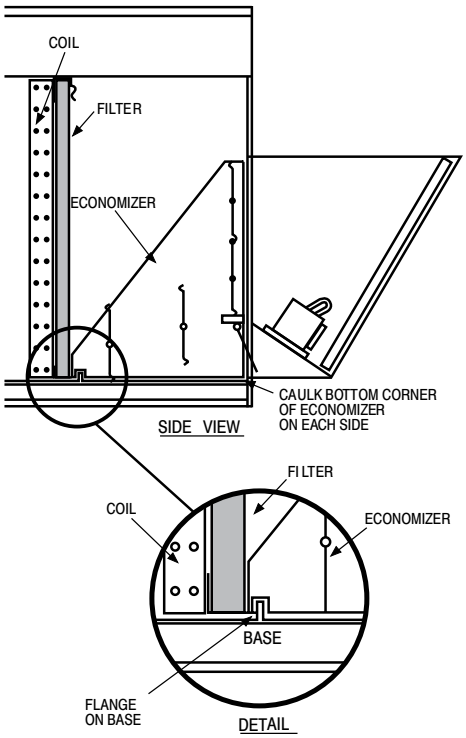

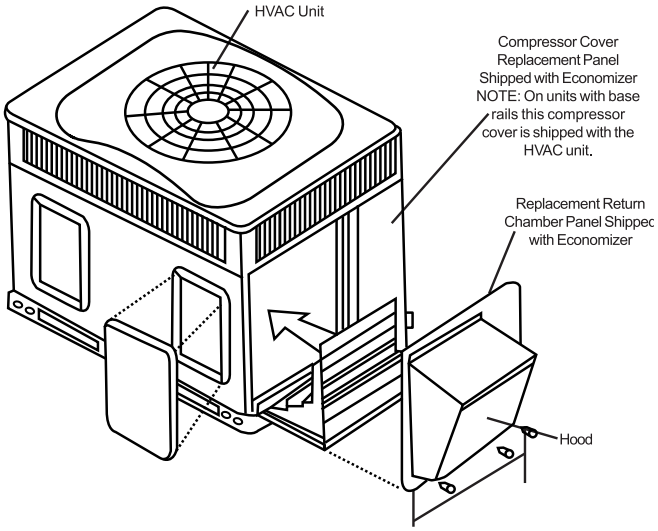

Vertical Economizer

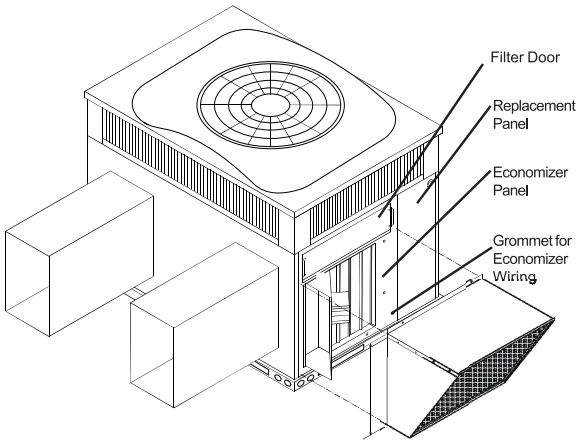

Horizontal Economizer

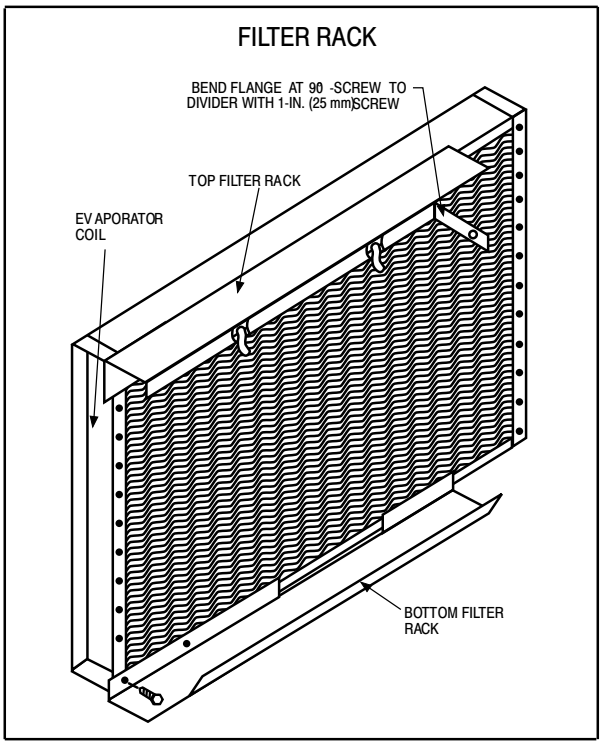

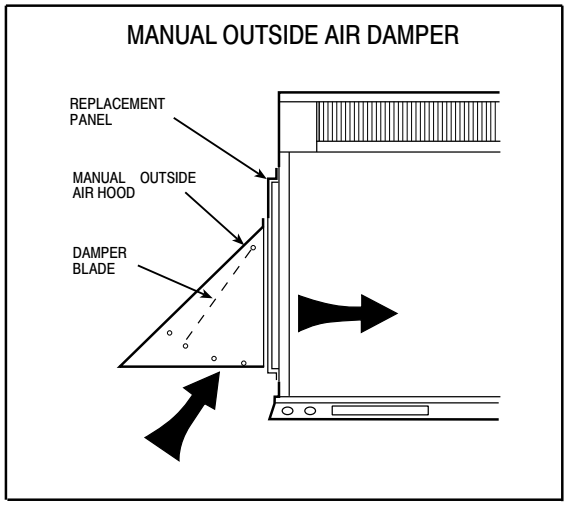

A09375

Unit Dimensions

24-30

COOLING CAPACITY	UNIT WT.		UNIT HEIGHT IN/MM	CENTER OF GRAVITY IN/MM					
	LB	KG	"A"	X		Y		Z	
24	371	168.3	51-3/4	1315	22-3/4	578	15-1/2	394	16-1/2	419
30	395	179.2	51-3/4	1315	22-3/4	578	15-1/2	394	16-1/2	419

UNIT	CORNER WEIGHT LB/KG			
	"1"	"2"	"3"	"4"
24	94.8 43.0	83.7 38.0	90.7 41.2	101.8 46.2
30	100.9 45.8	88.9 40.3	96.6 43.8	108.6 49.3

REQUIRED CLEARANCES TO COMBUSTIBLE MATL. INCHES [MM]

TOP OF UNIT.....14 [355.6]
DUCT SIDE OF UNIT.....2 [50.8]
SIDE OPPOSITE DUCTS.....14 [355.6]
BOTTOM OF UNIT.....1/2 [12.7]
FLUE PANEL.....36 [914.4]

NEC. REQUIRED CLEARANCES. INCHES [MM]

BETWEEN UNITS, POWER ENTRY SIDE.....42 [1066.8]
UNIT AND UNGROUNDED SURFACES, POWER ENTRY SIDE.....36 [914.0]
UNIT AND BLOCK OR CONCRETE WALLS AND OTHER GROUNDED SURFACES, POWER ENTRY SIDE.....42 [1066.8]

REQUIRED CLEARANCE FOR OPERATION AND SERVICING INCHES [MM]

EVAP. COIL ACCESS SIDE.....36 [914.0]
POWER ENTRY SIDE.....42 [1066.8]
(EXCEPT FOR NEC REQUIREMENTS)
UNIT TOP.....48 [1219.2]
SIDE OPPOSITE DUCTS.....36 [914.0]
DUCT PANEL.....12 [304.8]*

*MINIMUM DISTANCES:IF UNIT IS PLACED LESS THAN 12 [304.8] FROM WALL SYSTEM,THEN SYSTEM PERFORMANCE MAYBE COMPROMISED.

DIMENSIONS IN [] ARE IN MM

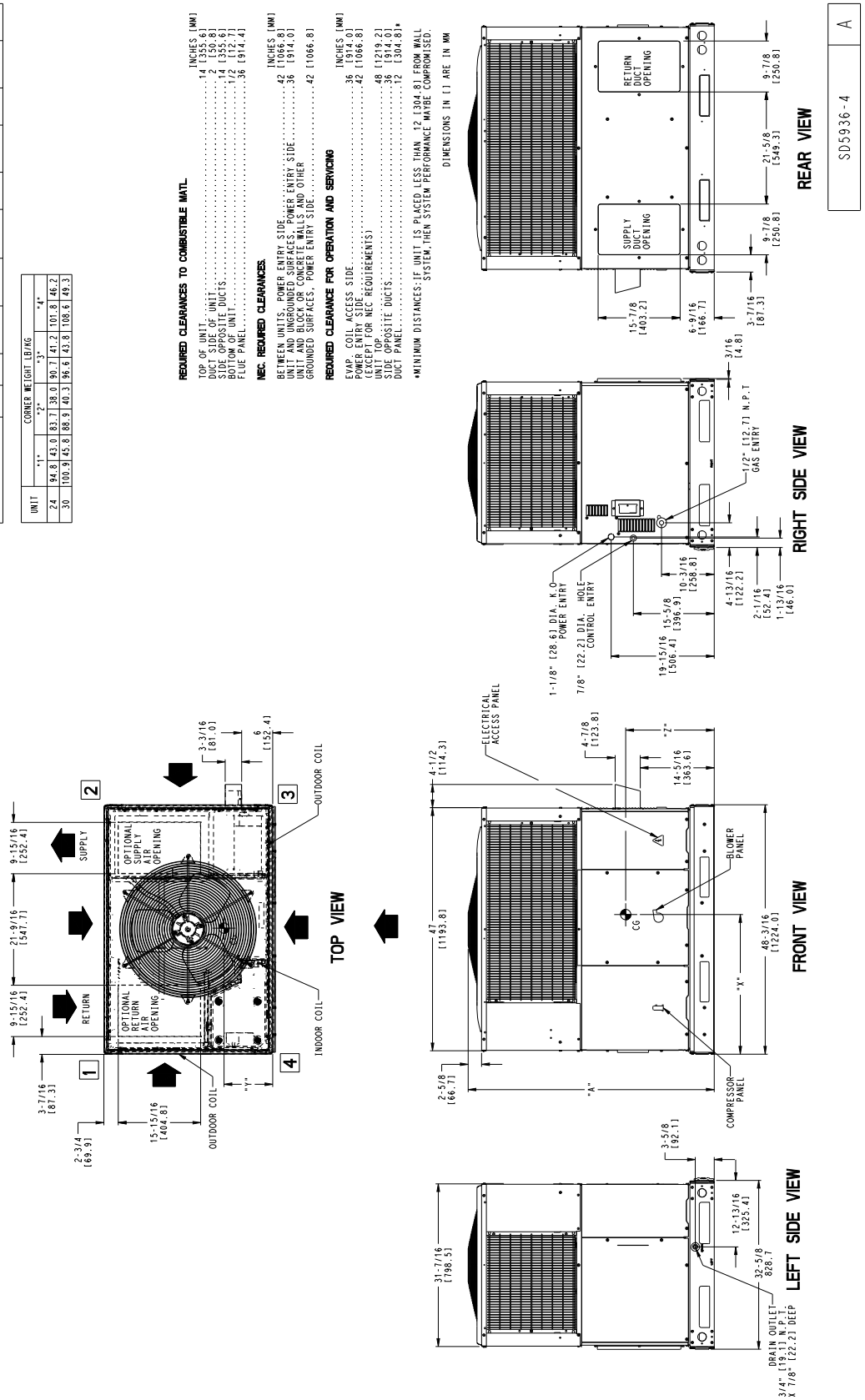

A230564

Unit Dimensions

36-60

COOLING CAPACITY	UNIT WT.		UNIT HEIGHT IN/MM	CENTER OF GRAVITY IN/MM				
	LB	KG	"A"	X		Y	Z	
36	447	202.8	54-3/4 1391	22-3/4	578	18	457	17-1/8 448
42	463	210.1	54-3/4 1391	22-3/4	578	18	457	17-3/8 448
48	477	216.4	44-3/4 1137	22-3/4	578	18	457	17-3/8 448
60	540	245.0	48-3/4 1238	22-3/4	578	18	457	18 457

UNIT	CORNER WEIGHT LB/KG			
	"1"	"2"	"3"	"4"
36	97.5 44.3	86.4 39.2	123.9 56.2	139.2 63.2
42	101.0 45.8	89.6 40.6	128.6 58.4	143.9 65.3
48	103.7 47.0	92.4 41.9	132.0 59.9	148.9 67.6
60	117.0 53.1	104.0 47.2	150.0 68.1	169.0 76.7

REQUIRED CLEARANCES TO COMBUSTIBLE MAITL.

	INCHES [MM]
TOP OF UNIT	14 [355.6]
DUCT SIDE OF UNIT	2 [50.8]
SIDE OPPOSITE DUCTS	14 [355.6]
BOTTOM OF UNIT	1/2 [12.7]
FLUE PANEL	36 [914.4]

NEC. REQUIRED CLEARANCES.

	INCHES [MM]
BETWEEN UNITS, POWER ENTRY SIDE	42 [1066.8]
UNIT AND UNGROUNDED SURFACES, POWER ENTRY SIDE	36 [914.0]
UNIT AND BLOCK OR CONCRETE WALLS AND OTHER GROUNDED SURFACES, POWER ENTRY SIDE	42 [1066.8]

REQUIRED CLEARANCE FOR OPERATION AND SERVICING

	INCHES [MM]
EVAP. COIL ACCESS SIDE	36 [914.0]
POWER ENTRY SIDE	42 [1066.8]
(EXCEPT FOR NEC REQUIREMENTS)	
UNIT TOP	48 [1219.2]
SIDE OPPOSITE DUCTS	36 [914.0]
DUCT PANEL	12 [304.8]*

*MINIMUM DISTANCES:IF UNIT IS PLACED LESS THAN 12 [304.8] FROM WALL SYSTEM,THEN SYSTEM PERFORMANCE MAYBE COMPROMISED.

DIMENSIONS IN [] ARE IN MM

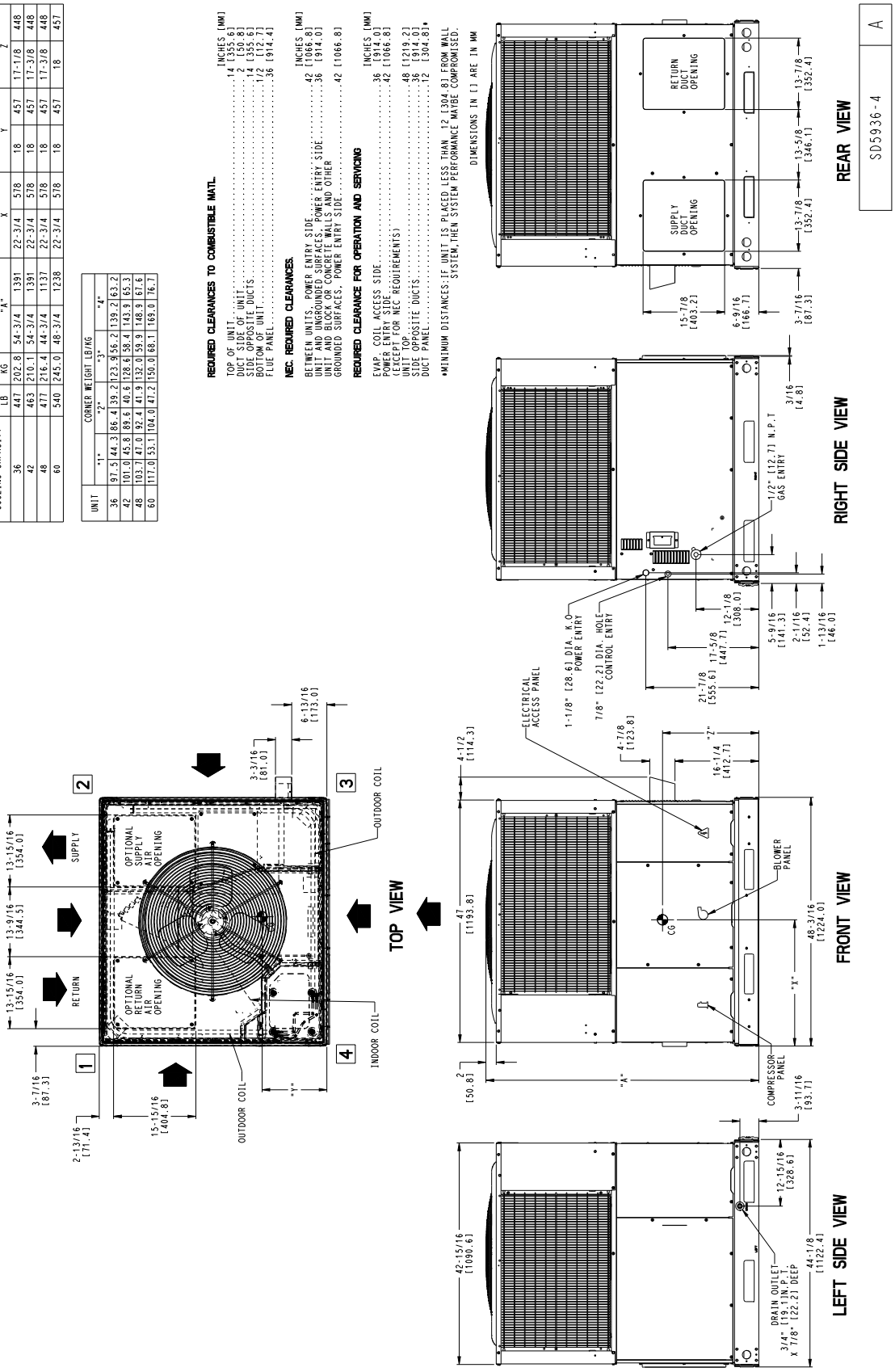

A230565

Accessory Dimensions

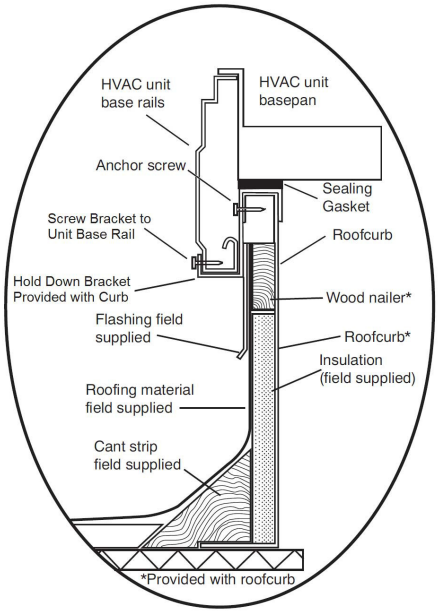

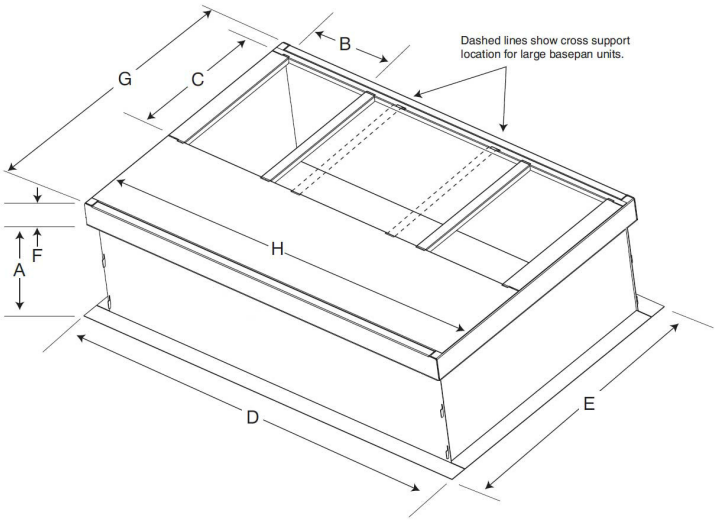

SMALL/COMMON CURB

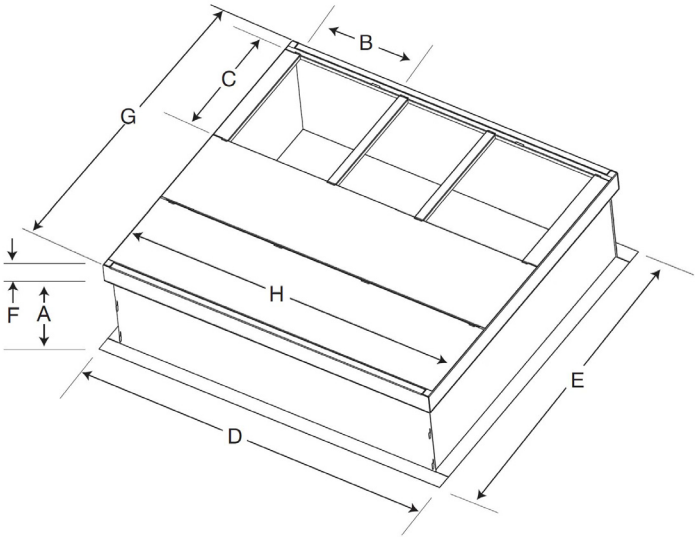

LARGE CURB

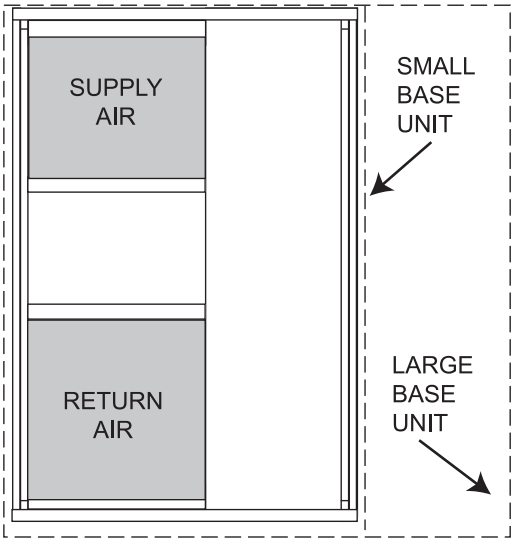

UNIT PLACEMENT ON COMMON CURB

SMALL OR LARGE BASE UNIT

A180216

UNIT SIZE	CATALOG NUMBER	A IN. (mm)	B IN. (mm)*	C IN. (mm)	D IN. (mm)	E IN. (mm)	F IN. (mm)	G IN. (mm)	H IN. (mm)
Small	CPRFCURB011B00	14 (356)	10 (254)	16 (406)	47.8 (1214)	32.4 (822)	2.7 (69)	30.6 (778)	46.1 (1170)
Large	CPRFCURB013B00	14 (356)	14 (356)			43.9 (1116)		42.2 (1072)	

NOTES:

1. Roof curb must be set up for unit being installed.
2. Seal strip must be applied, as required, to unit being installed.
3. Roof curb is made of 16-gauge steel.
4. Attach ductwork to curb (flanges of duct rest on curb).
5. Insulated panels: 1-in. (25.4 mm) thick fiberglass 1 lb. density.

IMPORTANT: Do not install large base pan dual fuel units onto the small base pan (common curb). The center of gravity on a large base pan HYBRID HEAT unit could overhang the curb causing an unsafe condition. Before installing any large base pan unit onto the common curb, check the "Y" distance in the product literature dimensional drawing to ensure that "Y" is greater than 14 in. (356 mm). Do not install any large base pan unit onto the common curb with a "Y" dimension (center of gravity) less than 14 in. (356 mm).

Selection Procedure (with example)

DETERMINE COOLING AND HEATING REQUIREMENTS AT DESIGN CONDITIONS:

Given:

Required Cooling Capacity (TC) ..... 29,000 Btuh
Sensible Heat Capacity (SHC) ..... 21,000 Btuh
Required Heating Capacity ..... 48,000 Btuh
Condenser Entering Air Temperature ..... 95°F (35°C)
Indoor-Air Temperature ..... 80°F (27°C) edb 67°F (19°C) ewb
Evaporator Air Quantity ..... 1000 CFM
External Static Pressure ..... 0.300 IN. W.C.
Electrical Characteristics 208-1-60

SELECT UNIT BASED ON REQUIRED COOLING CAPACITY

Enter Net Cooling Capacities table at condenser entering temperature of 95°F (35°C). Unit 30 at 950 CFM and 67°F (19°C) ewb (entering wet bulb) will provide a total capacity of 29,400 Btuh and a SHC of 26,950 Btuh. Calculate SHC correction, if required, using Note 4 under Cooling Capacities tables.

SELECT HEATING CAPACITY OF UNIT TO PROVIDE DESIGN CONDITION REQUIREMENT.

In the Gas Heating Capacities and Efficiencies table, note that the 30060 size unit will deliver a gas heat capacity of 49,000 BTUH with an input of 60,000 BTUH, which meets the heating capacity requirement.

DETERMINE FAN SPEED AND POWER REQUIREMENTS AT DESIGN CONDITIONS.

Before entering the air delivery tables, calculate the total static pressure required. From the given example, the Wet Coil Pressure Drop Table, and the Filter Pressure Drop Table:

External Static Pressure	0.300 IN. W.C.
Filter	0.070 IN. W.C.
Wet Coil Pressure Drop	0.060 IN. W.C.
Total Static Pressure	0.430 IN. W.C.

Enter the table for Dry Coil Air Delivery—At 0.43 IN. W.C. ESP (external static pressure) and MED-HIGH speed the motor delivers between 1037 CFM and 987 cfm. Interpolation estimates 1022 CFM at .43 IN. W.C. MED-HIGH delivers CFM needed.

SELECT UNIT THAT CORRESPONDS TO POWER SOURCE AVAILABLE.

The Electrical Data Table shows that the unit is designed to operate at 208-1-60.

Manufacturer reserves the right to change, at any time, specifications and designs without notice and without obligations.

Performance Data

24 Cooling Extended Performance Table

EVAPORATOR AIR		CONDENSER ENTERING AIR TEMPERATURES deg F																	
		75 (23.9)			85 (29.4)			95 (35)			105 (40.6)			115 (46.1)			125 (51.7)		
		Capacity MBtuh		Total	Capacity MBtuh		Total	Capacity MBtuh		Total	Capacity MBtuh		Total	Capacity MBtuh		Total	Capacity MBtuh		Total
CFM	EWB	Total	Sens	System KW	Total	Sens	System KW	Total	Sens	System KW	Total	Sens	System KW	Total	Sens	System KW	Total	Sens	System KW
700	57 (13.9)	22.81	22.81	1.56	22.02	22.02	1.71	20.98	20.98	1.90	19.74	19.74	2.14	18.67	18.67	2.35	17.53	17.53	2.62
	62 (16.7)	23.70	22.09	1.56	22.63	21.55	1.71	21.58	20.39	1.90	20.29	18.82	2.14	19.18	17.40	2.35	18.01	15.91	2.62
	63* (17.2)	24.17	17.82	1.56	23.08	17.24	1.71	21.80	16.66	1.90	20.25	15.99	2.14	18.94	15.32	2.35	17.42	14.82	2.62
	67 (19.4)	25.99	18.57	1.57	24.82	17.96	1.73	23.41	17.35	1.92	21.77	16.66	2.14	20.37	15.96	2.35	18.73	15.44	2.62
	72 (22.2)	28.33	14.85	1.59	27.05	14.19	1.75	25.59	13.65	1.94	23.73	12.99	2.16	22.20	12.29	2.37	20.42	11.74	2.65
750	57 (13.9)	22.42	22.42	1.57	21.65	21.16	1.73	20.62	19.86	1.92	19.41	18.33	2.15	18.35	16.95	2.37	17.23	15.49	2.64
	62 (16.7)	22.67	21.52	1.57	21.65	20.99	1.73	20.65	19.86	1.92	19.41	18.33	2.15	18.35	16.95	2.37	17.23	15.49	2.64
	63* (17.2)	22.92	17.36	1.57	21.88	16.79	1.73	20.67	16.22	1.92	19.20	15.58	2.15	17.96	14.93	2.37	16.52	14.44	2.64
	67 (19.4)	24.64	18.08	1.59	23.53	17.49	1.75	22.20	16.90	1.94	20.65	16.22	2.15	19.31	15.55	2.37	17.76	15.04	2.64
	72 (22.2)	26.86	14.47	1.61	25.65	13.82	1.76	24.26	13.30	1.96	22.50	12.65	2.17	21.05	11.97	2.39	19.36	11.43	2.66
900	57 (13.9)	24.76	24.76	1.62	23.90	23.90	1.78	22.77	22.64	1.97	21.43	20.90	2.20	20.26	19.32	2.41	19.02	17.66	2.69
	62 (16.7)	25.03	24.79	1.62	23.90	23.90	1.78	22.79	22.64	1.97	21.43	20.90	2.20	20.26	19.32	2.41	19.02	17.66	2.69
	63* (17.2)	25.30	19.79	1.62	24.16	19.14	1.78	22.82	18.50	1.97	21.20	17.76	2.20	19.83	17.02	2.41	18.23	16.46	2.69
	67 (19.4)	27.20	20.61	1.64	25.98	19.94	1.79	24.51	19.27	1.99	22.79	18.50	2.20	21.32	17.72	2.41	19.61	17.15	2.69
	72 (22.2)	29.65	16.49	1.65	28.32	15.75	1.81	26.79	15.16	2.01	24.84	14.43	2.22	23.24	13.65	2.44	21.37	13.03	2.71

* At 75°F (23.9 °C) entering dry bulb—Tennessee Valley Authority [TVA] rating conditions; all others at 80°F (26.7 °C) entering dry bulb. See Legend and Notes.

24 Heating Extended Performance Table -10-60°F (-23.3-15.6°C)

INDOOR AIR		OUTDOOR COIL ENTERING AIR TEMPERATURE																							
		-10°F (-23.3°C)			0°F (-17.8°C)			10°F (-12.2°C)			20°F (-6.7°C)			30°F (-1.1°C)			40°F (4.4°C)			50°F (8.3°C)			60°F (15.6°C)		
		Capacity (Mbtuh)		Total Sys	Capacity (Mbtuh)		Total Sys	Capacity (Mbtuh)		Total Sys	Capacity (Mbtuh)		Total Sys	Capacity (Mbtuh)		Total Sys	Capacity (Mbtuh)		Total Sys	Capacity (Mbtuh)		Total Sys	Capacity (Mbtuh)		Total Sys
EDB	CFM	Total	Integ	kW	Total	Integ	kW	Total	Integ	kW	Total	Integ	kW	Total	Integ	kW	Total	Integ	kW	Total	Integ	kW	Total	Integ	kW
65°F (18.3°C)	700	8.0	7.4	1.50	10.7	9.8	1.55	13.5	12.5	1.60	16.0	14.5	1.66	18.8	16.5	1.72	22.0	22.0	1.81	25.4	25.4	1.90	28.5	28.5	2.03
	750	8.1	7.5	1.47	10.8	9.9	1.51	13.7	12.6	1.57	16.2	14.7	1.62	19.0	16.6	1.68	22.2	22.2	1.76	25.6	25.6	1.85	28.8	28.8	1.97
	900	8.3	7.6	1.55	11.0	10.1	1.59	13.8	12.7	1.65	16.4	14.8	1.69	19.1	16.8	1.75	22.3	22.3	1.83	25.9	25.9	1.91	29.0	29.0	2.03
70°F (21.1°C)	700	7.8	7.2	1.56	10.4	9.6	1.61	13.2	12.1	1.67	15.6	14.1	1.73	18.3	16.0	1.79	21.4	21.4	1.88	24.7	24.7	1.99	27.8	27.8	2.12
	750	7.9	7.3	1.53	10.5	9.7	1.58	13.3	12.3	1.63	15.8	14.3	1.69	18.5	16.2	1.75	21.6	21.6	1.83	25.0	25.0	1.93	28.1	28.1	2.05
	900	8.1	7.4	1.61	10.7	9.8	1.65	13.5	12.4	1.71	15.9	14.4	1.76	18.6	16.3	1.82	21.8	21.7	1.90	25.2	25.2	1.99	28.2	28.2	2.11
75°F (23.9°C)	700	7.7	7.1	1.63	10.2	9.4	1.68	12.9	11.9	1.74	15.3	13.8	1.80	18.1	15.9	1.87	21.2	21.2	1.96	24.5	24.5	2.07	27.5	27.5	2.20
	750	7.8	7.1	1.59	10.3	9.5	1.64	13.1	12.0	1.70	15.5	14.0	1.75	18.3	16.0	1.82	21.4	21.4	1.90	24.7	24.7	2.01	27.8	27.8	2.13
	900	7.9	7.3	1.67	10.5	9.6	1.71	13.2	12.2	1.77	15.6	14.1	1.82	18.5	16.2	1.88	21.5	21.5	1.97	25.0	25.0	2.06	28.0	28.0	2.18

Manufacturer reserves the right to change, at any time, specifications and designs without notice and without obligations.

Performance Data

30 Cooling Extended Performance Table

EVAPORATOR AIR		CONDENSER ENTERING AIR TEMPERATURES deg F																	
		75 (23.9)			85 (29.4)			95 (35)			105 (40.6)			115 (46.1)			125 (51.7)		
CFM	EWB	Capacity MBtuh		Total System KW	Capacity MBtuh		Total System KW	Capacity MBtuh		Total System KW	Capacity MBtuh		Total System KW	Capacity MBtuh		Total System KW	Capacity MBtuh		Total System KW
		Total	Sens		Total	Sens		Total	Sens		Total	Sens		Total	Sens		Total	Sens	
875	57 (13.9)	29.81	29.81	2.11	28.78	28.78	2.32	27.42	27.42	2.58	25.80	25.80	2.90	24.40	24.40	3.18	22.90	22.90	3.55
	62 (16.7)	30.97	27.74	2.11	29.58	27.05	2.32	28.21	25.59	2.58	26.51	23.63	2.90	25.07	21.84	3.18	23.53	19.97	3.55
	63* (17.2)	31.59	22.38	2.11	30.16	21.64	2.32	28.49	20.91	2.58	26.47	20.08	2.90	24.76	19.24	3.18	22.77	18.61	3.55
	67 (19.4)	33.97	23.31	2.13	32.44	22.55	2.34	30.60	21.78	2.61	28.46	20.91	2.90	26.62	20.04	3.18	24.48	19.39	3.55
	72 (22.2)	37.02	18.65	2.15	35.35	17.81	2.37	33.44	17.14	2.63	31.02	16.31	2.92	29.02	15.43	3.22	26.68	14.73	3.59
950	57 (13.9)	29.70	28.53	2.14	28.67	26.93	2.34	27.31	25.26	2.60	25.70	23.32	2.92	24.30	21.56	3.21	22.81	19.71	3.58
	62 (16.7)	30.02	27.38	2.14	28.67	26.70	2.34	27.34	25.26	2.60	25.70	23.32	2.92	24.30	21.56	3.21	22.81	19.71	3.58
	63* (17.2)	30.35	22.08	2.14	28.98	21.36	2.34	27.37	20.64	2.60	25.43	19.81	2.92	23.79	18.99	3.21	21.87	18.37	3.58
	67 (19.4)	32.63	23.01	2.16	31.16	22.25	2.37	29.40	21.50	2.63	27.34	20.64	2.92	25.58	19.78	3.21	23.52	19.14	3.58
	72 (22.2)	35.57	18.40	2.18	33.97	17.58	2.39	32.13	16.92	2.66	29.80	16.10	2.95	27.88	15.23	3.24	25.64	14.54	3.61
1125	57 (13.9)	32.35	32.09	2.19	31.24	30.29	2.40	29.76	28.42	2.66	28.00	26.24	2.98	26.47	24.26	3.26	24.86	22.17	3.63
	62 (16.7)	32.71	31.12	2.19	31.24	30.04	2.40	29.79	28.42	2.66	28.00	26.24	2.98	26.47	24.26	3.26	24.86	22.17	3.63
	63* (17.2)	33.07	24.85	2.19	31.58	24.03	2.40	29.82	23.22	2.66	27.70	22.29	2.98	25.92	21.36	3.26	23.83	20.67	3.63
	67 (19.4)	35.55	25.88	2.21	33.95	25.03	2.42	32.03	24.19	2.69	29.79	23.22	2.98	27.87	22.25	3.26	25.62	21.53	3.63
	72 (22.2)	38.75	20.70	2.23	37.01	19.78	2.45	35.01	19.04	2.71	32.47	18.11	3.00	30.37	17.13	3.30	27.93	16.36	3.67

* At 75°F (23.9 °C) entering dry bulb—Tennessee Valley Authority [TVA] rating conditions; all others at 80°F (26.7 °C) entering dry bulb. See Legend and Notes.

30 Heating Extended Performance Table -10-60°F (-23.3-15.6°C)

INDOOR AIR		OUTDOOR COIL ENTERING AIR TEMPERATURES°F (°C)																							
		-10 (-23.3)			0 (-17.8)			10 (-12.2)			20 (-6.7)			30 (-1.1)			40 (4.4)			50 (10)			60 (15.6)		
EDB °F (°C)	CFM	Capacity MBtuh		Total Sys KW	Capacity MBtuh		Total Sys KW	Capacity MBtuh		Total Sys KW	Capacity MBtuh		Total Sys KW	Capacity MBtuh		Total Sys KW	Capacity MBtuh		Total Sys KW	Capacity MBtuh		Total Sys KW	Capacity MBtuh		Total Sys KW
		Total	Integ		Total	Integ		Total	Integ		Total	Integ		Total	Integ		Total	Integ		Total	Integ		Total	Integ	
65°F (18.3°C)	875	10.1	9.3	1.91	13.4	12.3	1.97	16.9	15.6	2.05	20.0	18.1	2.12	23.5	20.6	2.20	27.4	27.4	2.31	31.7	31.7	2.43	35.7	35.7	2.59
	950	10.2	9.4	1.89	13.5	12.4	1.94	17.1	15.7	2.01	20.2	18.3	2.08	23.7	20.8	2.16	27.7	27.7	2.26	32.0	32.0	2.38	36.0	36.0	2.53
	1125	10.4	9.5	1.97	13.7	12.6	2.03	17.3	15.9	2.10	20.4	18.5	2.16	23.9	20.9	2.23	27.9	27.9	2.33	32.4	32.4	2.44	36.2	36.2	2.58
70°F (21.1°C)	875	9.8	9.0	2.00	13.0	12.0	2.06	16.5	15.2	2.14	19.5	17.7	2.21	22.9	20.0	2.29	26.7	26.7	2.41	30.9	30.9	2.54	34.7	34.7	2.71
	950	9.9	9.1	1.96	13.1	12.1	2.03	16.7	15.3	2.10	19.7	17.8	2.17	23.1	20.2	2.24	27.0	27.0	2.35	31.2	31.2	2.48	35.1	35.1	2.64
	1125	10.1	9.3	2.05	13.3	12.3	2.11	16.8	15.5	2.18	19.9	18.0	2.24	23.3	20.4	2.31	27.2	27.2	2.42	31.5	31.5	2.53	35.3	35.3	2.69
75°F (23.9°C)	875	9.6	8.8	2.08	12.7	11.7	2.15	16.1	14.9	2.23	19.1	17.3	2.30	22.6	19.8	2.39	26.5	26.5	2.51	30.6	30.6	2.64	34.4	34.4	2.82
	950	9.7	8.9	2.04	12.9	11.8	2.11	16.3	15.0	2.18	19.3	17.5	2.25	22.9	20.0	2.33	26.7	26.7	2.45	30.9	30.9	2.58	34.7	34.7	2.74
	1125	9.9	9.1	2.12	13.1	12.0	2.18	16.5	15.2	2.25	19.5	17.7	2.32	23.1	20.2	2.40	26.9	26.9	2.51	31.2	31.2	2.63	34.9	34.9	2.79

Manufacturer reserves the right to change, at any time, specifications and designs without notice and without obligations.

Performance Data

36 Cooling Extended Performance Table

EVAPORATOR AIR		CONDENSER ENTERING AIR TEMPERATURES °F (°C)																	
		75 (23.9)			85 (29.4)			95 (35)			105 (40.6)			115 (46.1)			125 (51.7)		
CFM	EWB °F (°C)	Capacity MBtuh		Total Sys KW	Capacity MBtuh		Total Sys KW	Capacity MBtuh		Total Sys KW	Capacity MBtuh		Total Sys KW	Capacity MBtuh		Total Sys KW	Capacity MBtuh		Total Sys KW
		Total	Sens		Total	Sens		Total	Sens		Total	Sens		Total	Sens		Total	Sens	
1050	57 (13.9)	33.58	33.58	2.41	32.42	32.42	2.65	30.88	30.88	2.95	29.06	29.06	3.31	27.47	27.47	3.64	25.79	25.79	4.06
	62 (16.7)	34.88	33.38	2.41	33.31	32.56	2.65	31.76	30.80	2.95	29.86	28.44	3.31	28.23	26.29	3.64	26.50	24.03	4.06
	63* (17.2)	35.57	26.93	2.41	33.97	26.05	2.65	32.08	25.16	2.95	29.80	24.16	3.31	27.88	23.15	3.64	25.64	22.40	4.06
	67 (19.4)	38.25	28.05	2.44	36.53	27.13	2.68	34.46	26.21	2.98	32.05	25.16	3.31	29.98	24.12	3.64	27.57	23.33	4.06
	72 (22.2)	41.69	22.44	2.46	39.82	21.43	2.70	37.66	20.63	3.01	34.93	19.63	3.34	32.68	18.57	3.68	30.05	17.73	4.10
1150	57 (13.9)	33.74	33.74	2.44	32.57	32.57	2.68	31.03	30.67	2.98	29.20	28.31	3.34	27.61	26.17	3.67	25.92	23.93	4.09
	62 (16.7)	34.11	33.23	2.44	32.57	32.42	2.68	31.06	30.67	2.98	29.20	28.31	3.34	27.61	26.17	3.67	25.92	23.93	4.09
	63* (17.2)	34.48	26.81	2.44	32.93	25.93	2.68	31.10	25.06	2.98	28.89	24.05	3.34	27.02	23.05	3.67	24.85	22.30	4.09
	67 (19.4)	37.07	27.93	2.47	35.40	27.01	2.71	33.40	26.10	3.01	31.06	25.06	3.34	29.06	24.01	3.67	26.72	23.23	4.09
	72 (22.2)	40.41	22.34	2.49	38.59	21.34	2.74	36.51	20.54	3.04	33.86	19.54	3.37	31.67	18.49	3.71	29.12	17.65	4.13
1350	57 (13.9)	36.44	36.44	2.51	35.18	35.18	2.75	33.51	33.51	3.04	31.53	31.53	3.41	29.81	29.19	3.74	27.99	26.68	4.16
	62 (16.7)	36.84	36.84	2.51	35.18	35.18	2.75	33.55	33.55	3.04	31.53	31.53	3.41	29.81	29.19	3.74	27.99	26.68	4.16
	63* (17.2)	37.24	29.90	2.51	35.56	28.92	2.75	33.58	27.94	3.04	31.20	26.83	3.41	29.19	25.71	3.74	26.84	24.87	4.16
	67 (19.4)	40.04	31.14	2.53	38.24	30.13	2.77	36.07	29.11	3.07	33.55	27.94	3.41	31.38	26.78	3.74	28.86	25.91	4.16
	72 (22.2)	43.64	24.92	2.56	41.68	23.80	2.80	39.43	22.91	3.10	36.57	21.80	3.44	34.21	20.62	3.77	31.45	19.69	4.20

* At 75°F (23.9 °C) entering dry bulb—Tennessee Valley Authority [TVA] rating conditions; all others at 80°F (26.7 °C) entering dry bulb. See Legend and Notes.

36 Heating Extended Performance Table -10-60°F (-23.3-15.6°C)

INDOOR AIR		OUTDOOR COIL ENTERING AIR TEMPERATURES °F (°C)																							
		-10 (-23.3)			0 (-17.8)			10 (-12.2)			20 (-6.7)			30 (-1.1)			40 (4.4)			50 (10)			60 (15.6)		
EDB °F (°C)	CFM	Capacity MBtuh		Total Sys KW	Capacity MBtuh		Total Sys KW	Capacity MBtuh		Total Sys KW	Capacity MBtuh		Total Sys KW	Capacity MBtuh		Total Sys KW	Capacity MBtuh		Total Sys KW	Capacity MBtuh		Total Sys KW	Capacity MBtuh		Total Sys KW
		Total	Integ		Total	Integ		Total	Integ		Total	Integ		Total	Integ		Total	Integ		Total	Integ		Total	Integ	
65°F (18.3°C)	1050	11.7	10.8	2.10	15.6	14.3	2.16	19.7	18.2	2.25	23.4	21.2	2.32	27.4	24.0	2.41	32.0	32.0	2.53	37.0	37.0	2.67	41.6	41.6	2.85
	1150	11.9	10.9	2.09	15.7	14.5	2.15	19.9	18.4	2.23	23.6	21.4	2.30	27.7	24.2	2.38	32.4	32.4	2.50	37.4	37.4	2.63	42.1	42.1	2.80
	1350	12.1	11.1	2.19	16.0	14.7	2.25	20.2	18.6	2.33	23.8	21.6	2.39	27.9	24.4	2.47	32.6	32.5	2.58	37.8	37.8	2.71	42.3	42.3	2.87
70°F (21.1°C)	1050	11.4	10.5	2.19	15.2	14.0	2.26	19.2	17.7	2.35	22.8	20.6	2.43	26.7	23.4	2.52	31.2	31.2	2.64	36.0	36.0	2.79	40.5	40.5	2.98
	1150	11.6	10.6	2.17	15.3	14.1	2.24	19.4	17.9	2.32	23.0	20.8	2.40	27.0	23.6	2.48	31.5	31.5	2.60	36.4	36.4	2.74	41.0	41.0	2.92
	1350	11.8	10.8	2.27	15.5	14.3	2.34	19.6	18.1	2.41	23.2	21.0	2.49	27.2	23.8	2.57	31.7	31.7	2.68	36.8	36.8	2.81	41.2	41.2	2.98
75°F (23.9°C)	1050	11.2	10.3	2.28	14.9	13.7	2.35	18.8	17.3	2.44	22.3	20.2	2.53	26.4	23.1	2.62	30.9	30.9	2.75	35.7	35.7	2.91	40.1	40.1	3.10
	1150	11.3	10.4	2.26	15.0	13.8	2.33	19.0	17.5	2.41	22.5	20.4	2.49	26.7	23.4	2.58	31.2	31.2	2.71	36.0	36.0	2.85	40.5	40.5	3.03
	1350	11.5	10.6	2.35	15.2	14.0	2.42	19.3	17.7	2.50	22.8	20.6	2.58	26.9	23.6	2.66	31.4	31.4	2.78	36.4	36.4	2.92	40.8	40.8	3.09

Manufacturer reserves the right to change, at any time, specifications and designs without notice and without obligations.

Performance Data

42 Cooling Extended Performance Table

EVAPORATOR AIR		CONDENSER ENTERING AIR TEMPERATURES °F (°C)																	
		75 (23.9)			85 (29.4)			95 (35)			105 (40.6)			115 (46.1)			125 (51.7)		
CFM	EWB °F (°C)	Capacity MBtuh		Total Sys KW	Capacity MBtuh		Total Sys KW	Capacity MBtuh		Total Sys KW	Capacity MBtuh		Total Sys KW	Capacity MBtuh		Total Sys KW	Capacity MBtuh		Total Sys KW
		Total	Sens		Total	Sens		Total	Sens		Total	Sens		Total	Sens		Total	Sens	
1225	57 (13.9)	39.96	39.96	2.86	38.58	38.58	3.14	36.75	36.75	3.49	34.59	34.59	3.92	32.70	32.70	4.32	30.70	30.70	4.82
	62 (16.7)	41.51	38.26	2.86	39.64	37.31	3.14	37.81	35.30	3.49	35.54	32.59	3.92	33.60	30.13	4.32	31.55	27.54	4.82
	63* (17.2)	42.34	30.86	2.86	40.43	29.85	3.14	38.18	28.84	3.49	35.47	27.69	3.92	33.19	26.54	4.32	30.52	25.67	4.82
	67 (19.4)	45.53	32.15	2.89	43.48	31.10	3.17	41.01	30.04	3.53	38.14	28.84	3.92	35.68	27.64	4.32	32.81	26.74	4.82
	72 (22.2)	49.62	25.72	2.92	47.39	24.57	3.21	44.83	23.64	3.57	41.58	22.50	3.96	38.89	21.28	4.36	35.76	20.32	4.86
1350	57 (13.9)	40.40	39.94	2.90	39.01	37.70	3.18	37.16	35.37	3.53	34.97	32.65	3.96	33.06	30.18	4.36	31.04	27.59	4.86
	62 (16.7)	40.85	38.33	2.90	39.01	37.38	3.18	37.20	35.37	3.53	34.97	32.65	3.96	33.06	30.18	4.36	31.04	27.59	4.86
	63* (17.2)	41.29	30.92	2.90	39.43	29.91	3.18	37.24	28.90	3.53	34.60	27.74	3.96	32.36	26.58	4.36	29.76	25.72	4.86
	67 (19.4)	44.40	32.21	2.93	42.40	31.15	3.21	40.00	30.10	3.57	37.20	28.90	3.96	34.80	27.69	4.36	32.00	26.79	4.86
	72 (22.2)	48.40	25.77	2.96	46.22	24.61	3.25	43.72	23.69	3.61	40.55	22.54	4.00	37.93	21.32	4.40	34.88	20.36	4.90
1575	57 (13.9)	43.37	43.37	2.97	41.87	41.78	3.25	39.89	39.20	3.61	37.53	36.19	4.03	35.48	33.45	4.43	33.32	30.58	4.93
	62 (16.7)	43.84	42.93	2.97	41.87	41.43	3.25	39.93	39.20	3.61	37.53	36.19	4.03	35.48	33.45	4.43	33.32	30.58	4.93
	63* (17.2)	44.32	34.27	2.97	42.32	33.15	3.25	39.97	32.03	3.61	37.13	30.75	4.03	34.74	29.46	4.43	31.94	28.50	4.93
	67 (19.4)	47.66	35.70	3.00	45.51	34.53	3.29	42.93	33.36	3.64	39.93	32.03	4.03	37.35	30.69	4.43	34.35	29.69	4.93
	72 (22.2)	51.95	28.56	3.03	49.61	27.28	3.32	46.93	26.25	3.68	43.52	24.98	4.07	40.71	23.63	4.47	37.44	22.57	4.98

* At 75°F (23.9 °C) entering dry bulb—Tennessee Valley Authority [TVA] rating conditions; all others at 80°F (26.7 °C) entering dry bulb. See Legend and Notes.

42 Heating Extended Performance Table -10-60°F (-23.3-15.6°C)

INDOOR AIR		OUTDOOR COIL ENTERING AIR TEMPERATURES °F (°C)																							
		-10 (-23.3)			0 (-17.8)			10 (-12.2)			20 (-6.7)			30 (-1.1)			40 (4.4)			50 (10)			60 (15.6)		
EDB °F (°C)	CFM	Capacity MBtuh		Total Sys KW	Capacity MBtuh		Total Sys KW	Capacity MBtuh		Total Sys KW	Capacity MBtuh		Total Sys KW	Capacity MBtuh		Total Sys KW	Capacity MBtuh		Total Sys KW	Capacity MBtuh		Total Sys KW	Capacity MBtuh		Total Sys KW
		Total	Integ		Total	Integ		Total	Integ		Total	Integ		Total	Integ		Total	Integ		Total	Integ		Total	Integ	
65°F (18.3°C)	1225	13.4	12.3	2.45	17.8	16.4	2.53	22.6	20.8	2.63	26.7	24.2	2.72	31.3	27.4	2.82	36.6	36.6	2.96	42.3	42.3	3.13	47.6	47.6	3.34
	1350	13.6	12.5	2.45	18.0	16.6	2.53	22.8	21.0	2.62	27.0	24.4	2.70	31.6	27.7	2.80	37.0	37.0	2.93	42.7	42.7	3.09	48.1	48.1	3.29
	1575	13.8	12.7	2.56	18.2	16.8	2.63	23.0	21.2	2.72	27.2	24.6	2.80	31.9	27.9	2.89	37.2	37.2	3.02	43.2	43.2	3.17	48.3	48.3	3.36
70°F (21.1°C)	1225	13.1	12.0	2.56	17.3	15.9	2.64	22.0	20.2	2.75	26.0	23.5	2.84	30.5	26.7	2.95	35.6	35.6	3.09	41.2	41.2	3.27	46.3	46.3	3.48
	1350	13.2	12.1	2.55	17.5	16.1	2.63	22.2	20.4	2.73	26.3	23.8	2.81	30.8	27.0	2.92	36.0	36.0	3.06	41.6	41.6	3.22	46.8	46.8	3.42
	1575	13.4	12.4	2.66	17.8	16.3	2.73	22.4	20.7	2.82	26.5	24.0	2.91	31.0	27.2	3.00	36.2	36.2	3.14	42.0	42.0	3.29	47.0	47.0	3.49
75°F (23.9°C)	1225	12.8	11.8	2.67	17.0	15.6	2.76	21.5	19.8	2.86	25.5	23.1	2.96	30.2	26.4	3.07	35.3	35.3	3.22	40.8	40.8	3.40	45.9	45.9	3.63
	1350	12.9	11.9	2.65	17.2	15.8	2.74	21.8	20.0	2.84	25.8	23.3	2.93	30.5	26.7	3.03	35.6	35.6	3.18	41.2	41.2	3.35	46.3	46.3	3.56
	1575	13.2	12.1	2.75	17.4	16.0	2.83	22.0	20.2	2.93	26.0	23.5	3.01	30.7	26.9	3.11	35.9	35.9	3.25	41.6	41.6	3.41	46.6	46.6	3.62

Manufacturer reserves the right to change, at any time, specifications and designs without notice and without obligations.

Performance Data

48 Cooling Extended Performance Table

EVAPORATOR AIR		CONDENSER ENTERING AIR TEMPERATURES deg F																	
		75 (23.9)			85 (29.4)			95 (35)			105 (40.6)			115 (46.1)			125 (51.7)		
CFM	EWB	Capacity MBtuh		Total System KW	Capacity MBtuh		Total System KW	Capacity MBtuh		Total System KW	Capacity MBtuh		Total System KW	Capacity MBtuh		Total System KW	Capacity MBtuh		Total System KW
		Total	Sens		Total	Sens		Total	Sens		Total	Sens		Total	Sens		Total	Sens	
1400	57 (13.9)	45.28	45.28	3.26	43.71	43.71	3.58	41.64	41.64	3.99	39.19	39.19	4.48	37.05	37.05	4.93	34.79	34.79	5.50
	62 (16.7)	47.04	44.61	3.26	44.92	43.51	3.58	42.84	41.17	3.99	40.27	38.01	4.48	38.07	35.13	4.93	35.74	32.12	5.50
	63* (17.2)	47.97	35.99	3.26	45.81	34.81	3.58	43.26	33.63	3.99	40.19	32.29	4.48	37.60	30.94	4.93	34.57	29.93	5.50
	67 (19.4)	51.58	37.49	3.29	49.26	36.26	3.62	46.47	35.04	4.03	43.22	33.63	4.48	40.43	32.23	4.93	37.18	31.18	5.50
	72 (22.2)	56.23	29.99	3.32	53.69	28.65	3.65	50.79	27.57	4.07	47.11	26.23	4.52	44.07	24.82	4.98	40.52	23.70	5.55
1600	57 (13.9)	47.47	47.47	3.32	45.83	45.59	3.64	43.66	42.77	4.05	41.09	39.49	4.54	38.85	36.50	4.99	36.47	33.37	5.56
	62 (16.7)	48.00	46.35	3.32	45.83	45.21	3.64	43.71	42.77	4.05	41.09	39.49	4.54	38.85	36.50	4.99	36.47	33.37	5.56
	63* (17.2)	48.52	37.39	3.32	46.33	36.17	3.64	43.76	34.94	4.05	40.65	33.55	4.54	38.03	32.15	4.99	34.97	31.10	5.56
	67 (19.4)	52.17	38.95	3.35	49.82	37.67	3.68	47.00	36.40	4.09	43.71	34.94	4.54	40.89	33.49	4.99	37.60	32.40	5.56
	72 (22.2)	56.87	31.16	3.39	54.30	29.76	3.72	51.37	28.65	4.13	47.64	27.26	4.59	44.57	25.79	5.04	40.98	24.62	5.62
1800	57 (13.9)	49.14	49.14	3.38	47.44	47.44	3.71	45.19	45.19	4.11	42.53	42.20	4.60	40.21	39.01	5.05	37.75	35.66	5.63
	62 (16.7)	49.68	49.68	3.38	47.44	47.44	3.71	45.24	45.24	4.11	42.53	42.20	4.60	40.21	39.01	5.05	37.75	35.66	5.63
	63* (17.2)	50.22	39.96	3.38	47.95	38.65	3.71	45.29	37.35	4.11	42.07	35.85	4.60	39.36	34.36	5.05	36.19	33.24	5.63
	67 (19.4)	54.00	41.63	3.42	51.56	40.26	3.75	48.65	38.90	4.15	45.24	37.35	4.60	42.32	35.79	5.05	38.92	34.62	5.63
	72 (22.2)	58.86	33.30	3.45	56.20	31.81	3.78	53.17	30.62	4.19	49.31	29.13	4.65	46.13	27.56	5.10	42.42	26.31	5.68

* At 75°F (23.9 °C) entering dry bulb—Tennessee Valley Authority [TVA] rating conditions; all others at 80°F (26.7 °C) entering dry bulb. See Legend and Notes.

48 Heating Extended Performance Table -10-60°F (-23.3-15.6°C)

INDOOR AIR		OUTDOOR COIL ENTERING AIR TEMPERATURES °F (°C)																							
		-10 (-23.3)			0 (-17.8)			10 (-12.2)			20 (-6.7)			30 (-1.1)			40 (4.4)			50 (10)			60 (15.6)		
EDB	CFM	Capacity MBtuh		Total Sys KW	Capacity MBtuh		Total Sys KW	Capacity MBtuh		Total Sys KW	Capacity MBtuh		Total Sys KW	Capacity MBtuh		Total Sys KW	Capacity MBtuh		Total Sys KW	Capacity MBtuh		Total Sys KW	Capacity MBtuh		Total Sys KW
		Total	Integ		Total	Integ		Total	Integ		Total	Integ		Total	Integ		Total	Integ		Total	Integ		Total	Integ	
65°F (18.3°C)	1400	15.4	14.2	2.75	20.5	18.8	2.84	25.9	23.9	2.95	30.7	27.8	3.06	36.0	31.5	3.18	42.1	42.1	3.34	48.6	48.6	3.53	54.7	54.7	3.77
	1600	15.6	14.3	2.81	20.7	19.0	2.90	26.2	24.1	3.01	31.0	28.1	3.10	36.4	31.9	3.21	42.5	42.5	3.37	49.1	49.1	3.55	55.3	55.3	3.77
	1800	15.8	14.5	2.88	20.9	19.2	2.96	26.4	24.3	3.06	31.3	28.3	3.16	36.6	32.1	3.26	42.7	42.7	3.41	49.6	49.6	3.58	55.5	55.5	3.79
70°F (21.1°C)	1400	15.0	13.8	2.87	19.9	18.3	2.97	25.3	23.2	3.09	29.9	27.1	3.19	35.0	30.7	3.32	41.0	41.0	3.49	47.3	47.3	3.68	53.3	53.3	3.94
	1600	15.2	14.0	2.93	20.1	18.5	3.02	25.5	23.5	3.13	30.2	27.4	3.23	35.4	31.0	3.35	41.4	41.4	3.51	47.8	47.8	3.69	53.8	53.8	3.93
	1800	15.4	14.2	2.99	20.4	18.7	3.08	25.7	23.7	3.18	30.4	27.5	3.28	35.6	31.2	3.39	41.6	41.6	3.54	48.3	48.3	3.72	54.0	54.0	3.94
75°F (23.9°C)	1400	14.7	13.5	3.00	19.5	18.0	3.10	24.8	22.8	3.22	29.3	26.5	3.33	34.7	30.4	3.46	40.6	40.6	3.64	46.9	46.9	3.84	52.7	52.7	4.10
	1600	14.9	13.7	3.05	19.7	18.2	3.14	25.0	23.0	3.26	29.6	26.8	3.36	35.1	30.7	3.48	41.0	41.0	3.65	47.4	47.4	3.84	53.3	53.3	4.09
	1800	15.1	13.9	3.10	20.0	18.4	3.19	25.2	23.2	3.30	29.8	27.0	3.40	35.3	30.9	3.52	41.2	41.2	3.67	47.9	47.9	3.86	53.5	53.5	4.09

Manufacturer reserves the right to change, at any time, specifications and designs without notice and without obligations.

Performance Table

60 Cooling Extended Performance Table

EVAPORATOR AIR		CONDENSER ENTERING AIR TEMPERATURES deg F																	
		75			85			95			105			115			125		
		Capacity MBtuh		Total	Capacity MBtuh		Total	Capacity MBtuh		Total	Capacity MBtuh		Total	Capacity MBtuh		Total	Capacity MBtuh		Total
CFM	EWB	Total	Sens	System KW	Total	Sens	System KW	Total	Sens	System KW	Total	Sens	System KW	Total	Sens	System KW	Total	Sens	System KW
1600	57	52.32	52.32	3.95	50.51	50.51	4.34	48.12	48.12	4.82	45.28	45.28	5.41	42.81	42.45	5.95	40.19	38.73	6.64
	62	54.43	49.87	3.95	51.98	48.65	4.34	49.57	46.02	4.82	46.60	42.49	5.41	44.05	37.14	5.95	41.36	33.89	6.64
	63	55.54	40.23	3.95	53.04	38.92	4.34	50.09	37.60	4.82	46.54	36.10	5.41	43.53	32.71	5.95	40.03	31.59	6.64
	67	59.72	41.91	3.99	57.03	40.54	4.38	53.81	39.17	4.87	50.04	37.60	5.41	46.81	34.08	5.95	43.04	32.90	6.64
	72	65.10	33.53	4.03	61.01	32.03	4.42	55.35	30.83	4.92	54.54	29.33	5.47	51.02	26.24	6.01	46.92	25.00	6.71
1750	57	55.56	54.13	3.99	53.64	51.10	4.38	51.10	47.94	4.87	48.08	44.26	5.46	45.46	38.69	6.00	42.68	35.30	6.69
	62	56.17	51.95	3.99	53.64	50.67	4.38	51.15	47.94	4.87	48.08	44.26	5.46	45.46	38.69	6.00	42.68	35.30	6.69
	63	56.78	41.91	3.99	54.22	40.54	4.38	51.21	39.17	4.87	47.57	37.60	5.46	44.50	34.08	6.00	40.92	32.90	6.69
	67	61.05	43.66	4.03	58.30	42.23	4.43	55.00	40.80	4.92	51.15	39.17	5.46	47.85	35.50	6.00	44.00	34.27	6.69
	72	66.54	34.92	4.07	63.55	33.36	4.47	60.12	32.11	4.97	55.75	30.55	5.52	52.16	27.33	6.06	47.96	26.05	6.76
2000	57	58.41	58.41	4.07	56.39	55.48	4.46	53.72	52.05	4.95	50.55	48.05	5.54	47.80	42.01	6.08	44.87	38.33	6.77
	62	59.05	57.00	4.07	56.39	55.02	4.46	53.78	52.05	4.95	50.55	48.05	5.54	47.80	42.01	6.08	44.87	38.33	6.77
	63	59.70	45.50	4.07	57.01	44.01	4.46	53.84	42.53	4.95	50.02	40.82	5.54	46.79	37.00	6.08	43.02	35.72	6.77
	67	64.19	47.40	4.11	61.30	45.85	4.51	57.83	44.30	5.00	53.78	42.53	5.54	50.31	38.54	6.08	46.26	37.21	6.77
	72	69.97	37.92	4.15	66.82	36.22	4.55	63.21	34.86	5.05	58.62	33.17	5.60	54.84	29.67	6.14	50.43	28.28	6.84

60 Heating Extended Performance Table -10-60°F (-23.3-15.6°C)

INDOOR AIR		OUTDOOR COIL ENTERING AIR TEMPERATURE																							
		-10°F (-23.3°C)			0°F (-17.8°C)			10°F (-12.2°C)			20°F (-6.7°C)			30°F (-1.1°C)			40°F (4.4°C)			50°F (8.3°C)			60°F (15.6°C)		
EDB	CFM	Capacity (Mbtuh)		Total Sys	Capacity (Mbtuh)		Total Sys	Capacity (Mbtuh)		Total Sys	Capacity (Mbtuh)		Total Sys	Capacity (Mbtuh)		Total Sys	Capacity (Mbtuh)		Total Sys	Capacity (Mbtuh)		Total Sys	Capacity (Mbtuh)		Total Sys
		Total	Integ	kW	Total	Integ	kW	Total	Integ	kW	Total	Integ	kW	Total	Integ	kW	Total	Integ	kW	Total	Integ	kW	Total	Integ	kW
65°F (18.3°C)	1600	17.4	16.0	3.59	23.6	21.7	3.71	30.4	28.0	3.86	36.9	33.4	3.99	43.5	38.1	4.05	50.4	52.1	4.34	60.3	60.3	4.75	67.8	67.8	5.07
	1750	17.6	16.2	3.55	23.9	22.0	3.66	30.7	28.3	3.80	37.3	33.7	3.93	43.9	38.5	3.98	50.9	50.9	4.26	60.9	60.9	4.65	68.5	68.5	4.95
	2000	17.8	16.4	3.63	24.2	22.2	3.74	31.0	28.5	3.87	37.6	34.0	3.99	44.2	38.7	4.04	51.2	52.9	4.31	61.5	61.5	4.67	68.8	68.8	4.96
70°F (21.1°C)	1600	16.9	15.6	3.74	23.0	21.2	3.87	29.6	27.2	4.02	35.9	32.5	4.16	42.3	37.1	4.23	49.1	50.8	4.53	58.7	58.7	4.96	66.0	66.0	5.29
	1750	17.1	15.7	3.70	23.3	21.4	3.82	29.9	27.5	3.96	36.3	32.9	4.09	42.8	37.4	4.15	49.6	49.6	4.44	59.3	59.3	4.84	66.7	66.7	5.15
	2000	17.4	16.0	3.77	23.5	21.6	3.88	30.2	27.8	4.02	36.6	33.1	4.15	43.0	37.7	4.20	49.9	51.5	4.47	59.9	59.9	4.86	67.0	67.0	5.15
75°F (23.9°C)	1600	16.6	15.3	3.90	22.5	20.7	4.03	29.0	26.7	4.19	35.2	31.9	4.34	41.9	36.7	4.40	48.6	50.3	4.72	58.1	58.1	5.16	65.3	65.3	5.51
	1750	16.8	15.4	3.84	22.8	21.0	3.97	29.3	27.0	4.12	35.6	32.2	4.26	42.3	37.1	4.32	49.1	49.1	4.61	58.7	58.7	5.04	66.0	66.0	5.36
	2000	17.0	15.7	3.91	23.1	21.2	4.03	29.6	27.2	4.17	35.9	32.4	4.30	42.6	37.3	4.36	49.4	51.0	4.64	59.3	59.3	5.04	66.3	66.3	5.35

Manufacturer reserves the right to change, at any time, specifications and designs without notice and without obligations.

LEGEND
BF— Bypass Factor
edb— Entering Dry-Bulb
Ewb — Entering Wet-Bulb
kW — Total Unit Power Input
SHC — Sensible Heat Capacity (1000 Btuh)
TC — Total Capacity (1000 Btuh) (net)
rh—Relative Humidity

COOLING NOTES:

1. Ratings are net; they account for the effects of the evaporator-fan motor power and heat.
2. Direct interpolation is permissible. Do not extrapolate.
3. The following formulas may be used:

$$^{t}ldb = {}^{t}edb - \frac{\text{Sensible capacity (Btuh)}}{1.10 \times \text{CFM}}$$

$$^{t}lwb = \text{Wet-bulb temperature corresponding to enthalpy air leaving evaporator coil } ({}^{h}lwb)$$

$$^{h}lwb = {}^{h}ewb - \frac{\text{total capacity (Btuh)}}{(4.5 \times \text{CFM})}$$

Where: ^{h}ewb = Enthalpy of air entering evaporator coil

4. The SHC is based on 80°F (26.7 °C) edb temperature of air entering evaporator coil. Below 80°F (26.7°C) edb, subtract (corr factor x cfm) from SHC. Above 80°F (26.7°C) edb, add (corr factor x cfm) to SHC.
   Correction Factor = 1.10 x (1 + BF) x (edb - 80).
5. Integrated capacity is maximum (instantaneous) capacity less the effect of frost on the outdoor coil and the heat required to defrost it.

Performance Data

Natural Gas Orifice Sizes and Manifold Pressure, Single Phase Models

Nameplate Input (Btu/hr)		ALTITUDE OF INSTALLATION (FT. ABOVE SEA LEVEL) U.S.A.*				
		0 to 2000 (0-610 m)	2001 to 3000* (611 to 914 m)	3001 to 4000 (915 to 1219 m)	4001 to 5000 (1220 to 1524 m)	5001 to 6000 (1524 to 1829 m)
60000	Orifice No. (Qty)	44 (3)	45 (3)†	48 (3)†	48 (3)†	48 (3)†
	Manifold Press. (in. W.C.)	3.2	3.2	3.8	3.5	3.2
90000	Orifice No. (Qty)	38 (3)	41 (3)†	41 (3)†	42 (3)†	42 (3)†
	Manifold Press. (in. W.C.)	3.6	3.8	3.4	3.4	3.2
115000	Orifice No. (Qty)	33 (3)	36 (3)†	36 (3)†	36 (3)†	38 (3)†
	Manifold Press. (in. W.C.)	3.8	3.8	3.6	3.3	3.6
127000	Orifice No. (Qty)	31 (3)	31 (3)	33 (3)†	33 (3)†	34 (3)†
	Manifold Press. (in. W.C.)	3.7	3.2	3.5	3.2	3.2

*. In the U.S.A., the input rating for altitudes above 2000 ft (610m) must be reduced by 4% for each 1000 ft (305 m) above sea level.
In Canada, the input rating for altitudes from 2001 to 4500 ft (611 to 1372 m) above sea level must be derated by 10% by an authorized gas conversion station or dealer.
For Canadian Installations from 2000 to 4500 ft, use U.S.A. column 2001 to 3000 ft.

Note: Orifice sizes and manifold pressure settings are based on natural gas with a heating value of 1025 Btu/ft^3 and a specific gravity of .6.

†. Orifices available through your distributor.

Propane Gas Orifice Sizes and Manifold Pressure, Single Phase Models

Nameplate Input (Btu/hr)		ALTITUDE OF INSTALLATION (FT. ABOVE SEA LEVEL) U.S.A.*				
		0 to 2000 (0-610 m)	2001 to 3000* (611 to 914 m)	3001 to 4000 (915 to 1219 m)	4001 to 5000 (1220 to 1524 m)	5001 to 6000 (1524 to 1829 m)
60000	Orifice No. (Qty)	55 (3)	56 (3)	56 (3)	56 (3)	56 (3)
	Manifold Press. (IN. W.C.)	10.0	11.0	11.0	11.0	10.7
90000	Orifice No. (Qty)	53 (3)	54 (3)	54 (3)	54 (3)	54 (3)
	Manifold Press. (IN. W.C.)	10.0	11.0	11.0	11.0	11.0
115000	Orifice No. (Qty)	51 (3)	52 (3)	52 (3)	53 (3)	53 (3)
	Manifold Press. (IN. W.C.)	10.0	11.0	10.6	11.0	11.0
127000	Orifice No. (Qty)	49 (3)	50 (3)	51 (3)	52 (3)	52 (3)
	Manifold Press. (IN. W.C.)	10.0	11.0	11.0	11.0	11.0

*. In the U.S.A., the input rating for altitudes above 2000 ft (610m) must be reduced by 4% for each 1000 ft (305 m) above sea level.
In Canada, the input rating for altitudes from 2001 to 4500 ft (611 to 1372 m) above sea level must be derated by 10% by an authorized gas conversion station or dealer.
For Canadian Installations from 2000 to 4500 ft (610-1372 m), use U.S.A. column 2001 to 3000 ft (611 to 914 m).

High Altitude Compensation, Propane Gas, Single Phase Models

Nameplate Input (Btu/hr)	Rated Heating Input (Btu/hr), Propane Gas at Installation Altitude Above Sea Level, U.S.A.*				
	0 to 2000 ft (0-610 m)	2001 to 3000 ft (611 to 914 m)	3001 to 4000 ft (915 to 1219 m)	4001 to 5000 ft (1220 to 1524 m)	5001 to 6000 ft (1524 to 1829 m)
60000	57000	47500	47500	47500	46900
90000	79000	68900	68900	68600	68600
115000	103000	100400	98900	83000	83000
127000	116000	115500	111800	101300	100400

*. In the U.S.A., the input rating for altitudes above 2000 ft (610m) must be reduced by 4% for each 1000 ft (305 m) above sea level.
In Canada, the input rating for altitudes from 2001 to 4500 ft (611 to 1372 m) above sea level must be derated by 10% by an authorized gas conversion station or dealer.
For Canadian Installations from 2000 to 4500 ft (610-1372 m), use U.S.A. column 2001 to 3000 ft (611 to 914 m).

High Altitude Compensation, Natural Gas, Single Phase Models

Nameplate Input (Btu/hr)	Rated Heating Input (Btu/hr), Natural Gas at Installation Altitude Above Sea Level, U.S.A.*				
	0 to 2000 ft (0-610 m)	2001 to 3000 ft* (611 to 914 m)	3001 to 4000 ft (915 to 1219 m)	4001 to 5000 ft (1220 to 1524 m)	5001 to 6000 ft (1524 to 1829 m)
60000	60000	54000	51600	49200	46800
90000	90000	81000	77400	73800	70200
115000	115000	103500	98900	94300	89700
127000	127000	143000	109200	104100	99100

*. In the U.S.A., the input rating for altitudes above 2000 ft (610m) must be reduced by 4% for each 1000 ft (305 m) above Sea level.
In Canada, the input rating for altitudes from 2001 to 4500 ft (611 to 1372 m) above sea level must be derated by 10% by an authorized gas conversion station or dealer.
For Canadian Installations from 2000 to 4500 ft (610-1372 m), use U.S.A. column 2001 to 3000 ft (611 to 914 m).

Dry Coil Air Delivery* - Horizontal and Downflow Discharge Sizes 24-60 208/230 VAC - 1 Phase

Unit Size	Heating Rise °F (°C)	Motor Speed	Tap	Allowable Functions	ESP (in. W.C.)	0.1	0.2	0.3	0.4	0.5	0.6	0.7	0.8	0.9	1
24060	25 - 55 (14 - 31)	Low†	Blue	Alternate Cooling	CFM	723	563	308	---	---	---	---	---	---	---
					BHP	0.09	0.07	0.06	---	---	---	---	---	---	---
					Gas Heat Rise (°F)	NA	NA	NA	NA	NA	NA	NA	NA	NA	NA
					Gas Heat Rise (°C)	NA	NA	NA	NA	NA	NA	NA	NA	NA	NA
		Med-Low	Pink	Alternate Cooling, Alternate Gas Heating	CFM	829	766	696	606	538	470	406	341	283	220
					BHP	0.11	0.12	0.12	0.13	0.13	0.14	0.14	0.15	0.15	0.16
					Gas Heat Rise (°F)	54	NA	NA	NA	NA	NA	NA	NA	NA	NA
					Gas Heat Rise (°C)	30	NA	NA	NA	NA	NA	NA	NA	NA	NA
		Medium**	Red	Cooling, Alternate Gas Heating	CFM	1065	1016	966	914	857	783	716	667	617	566
					BHP	0.19	0.20	0.20	0.21	0.22	0.23	0.23	0.24	0.24	0.25
					Gas Heat Rise (°F)	42	44	46	49	52	NA	NA	NA	NA	NA
					Gas Heat Rise (°C)	23	24	26	27	29	NA	NA	NA	NA	NA
		Med-High‡	Orange	Gas Heating, Alternate Cooling	CFM	1097	1048	999	949	893	833	751	701	651	603
					BHP	0.21	0.21	0.22	0.22	0.23	0.24	0.25	0.25	0.26	0.26
					Gas Heat Rise (°F)	41	43	45	47	50	54	NA	NA	NA	NA
					Gas Heat Rise (°C)	23	24	25	26	28	30	NA	NA	NA	NA
		High	Black	High Static Cooling Only	CFM	1215	1173	1129	1085	1038	989	936	854	803	760
					BHP	0.26	0.27	0.28	0.28	0.29	0.30	0.31	0.32	0.32	0.33
30060	25 - 55 (14 - 31)	Low†	Blue		CFM	643	552	455	348	225	---	---	---	---	---
					BHP	0.09	0.10	0.11	0.11	0.11	---	---	---	---	---
					Gas Heat Rise (°F)	NA	NA	NA	NA	NA	NA	NA	NA	NA	NA
					Gas Heat Rise (°C)	NA	NA	NA	NA	NA	NA	NA	NA	NA	NA
		Med-Low	Pink	Alternate Cooling, Alternate Gas Heating	CFM	817	744	673	597	516	431	325	190	---	---
					BHP	0.14	0.15	0.15	0.16	0.17	0.17	0.18	0.18	---	---
					Gas Heat Rise (°F)	55	NA	NA	NA	NA	NA	NA	NA	NA	NA
					Gas Heat Rise (°C)	30	NA	NA	NA	NA	NA	NA	NA	NA	NA
		Medium‡	Red	Gas Heating, Alternate Cooling	CFM	1159	1104	1045	990	937	878	821	759	693	618
					BHP	0.31	0.32	0.33	0.33	0.34	0.35	0.36	0.37	0.37	0.38
					Gas Heat Rise (°F)	39	40	43	45	48	51	54	NA	NA	NA
					Gas Heat Rise (°C)	21	22	24	25	26	28	30	NA	NA	NA
		Med-High**	Orange	Cooling, Alternate Gas Heating	CFM	1201	1147	1095	1037	987	934	877	818	755	671
					BHP	0.34	0.35	0.36	0.37	0.37	0.38	0.39	0.40	0.41	0.40
					Gas Heat Rise (°F)	37	39	41	43	45	48	51	55	NA	NA
					Gas Heat Rise (°C)	21	22	23	24	25	27	28	30	NA	NA
		High	Black	High Static Cooling Only	CFM	1291	1236	1181	1131	1080	1033	978	909	792	661
					BHP	0.41	0.42	0.43	0.43	0.44	0.45	0.46	0.45	0.43	0.40

Manufacturer reserves the right to change, at any time, specifications and designs without notice and without obligations.

Dry Coil Air Delivery* - Horizontal and Downflow Discharge Sizes 24-60 208/230 VAC - 1 Phase (Continued)

Unit Size	Heating Rise °F (°C)	Motor Speed	Tap	Allowable Functions	ESP (in. W.C.)	0.1	0.2	0.3	0.4	0.5	0.6	0.7	0.8	0.9	1
36090	35 - 65 (19 - 36)	Low†	Blue	Alternate Cooling, Alternate Gas Heating	CFM	1069	1006	955	896	847	800	755	700	649	598
					BHP	0.16	0.17	0.18	0.19	0.20	0.21	0.22	0.23	0.24	0.24
					Gas Heat Rise (°F)	63	NA	NA	NA	NA	NA	NA	NA	NA	NA
					Gas Heat Rise (°C)	35	NA	NA	NA	NA	NA	NA	NA	NA	NA
		Med-Low	Pink	Alternate Cooling, Alternate Gas Heating	CFM	1154	1100	1045	997	936	886	847	804	749	699
					BHP	0.19	0.20	0.21	0.23	0.24	0.24	0.25	0.26	0.27	0.28
					Gas Heat Rise (°F)	58	61	64	NA	NA	NA	NA	NA	NA	NA
					Gas Heat Rise (°C)	32	34	36	NA	NA	NA	NA	NA	NA	NA
		Medium‡	Red	Gas Heating, Alternate Cooling	CFM	1295	1247	1199	1152	1104	1050	997	955	918	875
					BHP	0.26	0.27	0.28	0.29	0.30	0.31	0.32	0.33	0.33	0.34
					Gas Heat Rise (°F)	52	54	56	58	61	64	NA	NA	NA	NA
					Gas Heat Rise (°C)	29	30	31	32	34	35	NA	NA	NA	NA
		Med-High**	Orange	Cooling, Alternate Gas Heating	CFM	1421	1374	1328	1283	1236	1188	1137	1089	1042	1011
					BHP	0.32	0.33	0.35	0.36	0.37	0.38	0.39	0.40	0.41	0.41
					Gas Heat Rise (°F)	47	49	50	52	54	56	59	61	64	NA
					Gas Heat Rise (°C)	26	27	28	29	30	31	33	34	36	NA
		High	Black	High Static Cooling Only	CFM	1505	1464	1423	1380	1336	1292	1242	1199	1145	1096
					BHP	0.38	0.39	0.40	0.42	0.43	0.43	0.44	0.45	0.46	0.47
42090	35 - 65 (19 - 36)	Low†	Blue		CFM	956	899	843	786	729	676	621	558	504	435
					BHP	0.13	0.13	0.14	0.15	0.16	0.16	0.17	0.18	0.18	0.19
					Gas Heat Rise (°F)	NA	NA	NA	NA	NA	NA	NA	NA	NA	NA
					Gas Heat Rise (°C)	NA	NA	NA	NA	NA	NA	NA	NA	NA	NA
		Med-Low	Pink		CFM	1201	1153	1107	1060	1012	965	917	871	828	782
					BHP	0.21	0.22	0.22	0.23	0.24	0.25	0.26	0.27	0.28	0.29
					Gas Heat Rise (°F)	56	58	60	63	NA	NA	NA	NA	NA	NA
					Gas Heat Rise (°C)	31	32	34	35	NA	NA	NA	NA	NA	NA
		Medium‡	Red	Gas Heating, Alternate Cooling	CFM	1443	1402	1361	1322	1284	1243	1204	1164	1124	1084
					BHP	0.32	0.33	0.34	0.35	0.36	0.37	0.38	0.39	0.40	0.42
					Gas Heat Rise (°F)	46	48	49	51	52	54	56	58	60	62
					Gas Heat Rise (°C)	26	27	27	28	29	30	31	32	33	34
		Med-High**	Orange	Cooling, Alternate Gas Heating	CFM	1529	1491	1451	1411	1376	1338	1300	1261	1223	1185
					BHP	0.37	0.39	0.40	0.41	0.42	0.43	0.44	0.45	0.46	0.47
					Gas Heat Rise (°F)	44	45	46	47	49	50	52	53	55	57
					Gas Heat Rise (°C)	24	25	26	26	27	28	29	29	30	31
		High	Black	High Static Cooling Only	CFM	1604	1565	1529	1490	1455	1421	1385	1348	1310	1274
					BHP	0.42	0.44	0.45	0.46	0.47	0.48	0.49	0.50	0.51	0.52

Manufacturer reserves the right to change, at any time, specifications and designs without notice and without obligations.

Dry Coil Air Delivery* - Horizontal and Downflow Discharge Sizes 24-60 208/230 VAC - 1 Phase (Continued)

Unit Size	Heating Rise °F (°C)	Motor Speed	Tap	Allowable Functions	ESP (in. W.C.)	0.1	0.2	0.3	0.4	0.5	0.6	0.7	0.8	0.9	1
48090	35 - 65 (19 - 36)	Low†	Blue		CFM	641	551	462	385	289	216	163	115	---	---
					BHP	0.05	0.06	0.06	0.07	0.07	0.08	0.08	0.09	---	---
					Gas Heat Rise (°F)	NA	NA	NA	NA	NA	NA	NA	NA	NA	NA
					Gas Heat Rise (°C)	NA	NA	NA	NA	NA	NA	NA	NA	NA	NA
		Med-Low‡	Pink	Gas Heating, Alternate Cooling	CFM	1437	1395	1351	1307	1265	1221	1176	1132	1084	1039
					BHP	0.29	0.30	0.31	0.32	0.33	0.34	0.35	0.36	0.37	0.38
					Gas Heat Rise (°F)	47	48	50	51	53	55	57	59	62	64
					Gas Heat Rise (°C)	26	27	28	28	29	30	32	33	34	36
		Medium**	Red	Cooling	CFM	1771	1735	1699	1664	1627	1592	1557	1522	1486	1450
					BHP	0.51	0.52	0.53	0.55	0.56	0.57	0.58	0.59	0.61	0.62
					Gas Heat Rise (°F)	NA	NA	NA	NA	NA	NA	NA	NA	NA	NA
					Gas Heat Rise (°C)	NA	NA	NA	NA	NA	NA	NA	NA	NA	NA
		Med-High	Orange	Alternate Cooling	CFM	1928	1897	1862	1830	1796	1764	1732	1698	1620	1512
					BHP	0.64	0.65	0.67	0.68	0.69	0.71	0.72	0.73	0.71	0.66
					Gas Heat Rise (°F)	NA	NA	NA	NA	NA	NA	NA	NA	NA	NA
					Gas Heat Rise (°C)	NA	NA	NA	NA	NA	NA	NA	NA	NA	NA
		High	Black	High Static Cooling Only	CFM	2212	2167	2124	2061	1976	1892	1794	1699	1567	1438
					BHP	0.97	0.99	1.00	0.97	0.95	0.91	0.86	0.82	0.77	0.71
48115	30 - 60 (17 - 33)	Low†	Blue		CFM	641	551	462	385	289	216	163	115	---	---
					BHP	0.05	0.06	0.06	0.07	0.07	0.08	0.08	0.09	---	---
					Gas Heat Rise (°F)	134	155	185	222	296	NA	NA	NA	NA	NA
					Gas Heat Rise (°C)	74	86	103	124	164	NA	NA	NA	NA	NA
		Med-Low	Pink	Alternate Cooling, Alternate Gas Heating	CFM	1437	1395	1351	1307	1265	1221	1176	1132	1084	1039
					BHP	0.29	0.30	0.31	0.32	0.33	0.34	0.35	0.36	0.37	0.38
					Gas Heat Rise (°F)	60	NA	NA	NA	NA	NA	NA	NA	NA	NA
					Gas Heat Rise (°C)	33	NA	NA	NA	NA	NA	NA	NA	NA	NA
		Medium**	Red	Cooling, Alternate Gas Heating	CFM	1771	1735	1699	1664	1627	1592	1557	1522	1486	1450
					BHP	0.51	0.52	0.53	0.55	0.56	0.57	0.58	0.59	0.61	0.62
					Gas Heat Rise (°F)	48	49	50	51	53	54	55	56	58	59
					Gas Heat Rise (°C)	27	27	28	29	29	30	31	31	32	33
		Med-High‡	Orange	Gas Heating, Alternate Cooling	CFM	1928	1897	1862	1830	1796	1764	1732	1698	1620	1512
					BHP	0.64	0.65	0.67	0.68	0.69	0.71	0.72	0.73	0.71	0.66
					Gas Heat Rise (°F)	44	45	46	47	48	49	49	50	53	57
					Gas Heat Rise (°C)	25	25	26	26	26	27	27	28	29	31
		High	Black	High Static Cooling Only	CFM	2212	2167	2124	2061	1976	1892	1794	1699	1567	1438
					BHP	0.97	0.99	1.00	0.97	0.95	0.91	0.86	0.82	0.77	0.71

Manufacturer reserves the right to change, at any time, specifications and designs without notice and without obligations.

Dry Coil Air Delivery* - Horizontal and Downflow Discharge Sizes 24-60 208/230 VAC - 1 Phase (Continued)

Unit Size	Heating Rise °F (°C)	Motor Speed	Tap	Allowable Functions	ESP (in. W.C.)	0.1	0.2	0.3	0.4	0.5	0.6	0.7	0.8	0.9	1
60115	30 - 60 (17 - 33)	Low†	Blue		CFM	641	551	462	385	289	216	163	115	---	---
					BHP	0.05	0.06	0.06	0.07	0.07	0.08	0.08	0.09	---	---
					Gas Heat Rise (°F)	NA	NA	NA	NA	NA	NA	NA	NA	NA	NA
					Gas Heat Rise (°C)	NA	NA	NA	NA	NA	NA	NA	NA	NA	NA
		Med-Low	Pink		CFM	1437	1395	1351	1307	1265	1221	1176	1132	1084	1039
					BHP	0.29	0.30	0.31	0.32	0.33	0.34	0.35	0.36	0.37	0.38
					Gas Heat Rise (°F)	60	NA	NA	NA	NA	NA	NA	NA	NA	NA
					Gas Heat Rise (°C)	33	NA	NA	NA	NA	NA	NA	NA	NA	NA
		Medium**	Red	Cooling, Alternate Gas Heating	CFM	1914	1881	1848	1814	1780	1748	1716	1681	1619	1512
					BHP	0.62	0.64	0.65	0.67	0.68	0.69	0.71	0.72	0.71	0.66
					Gas Heat Rise (°F)	45	45	46	47	48	49	50	51	53	57
					Gas Heat Rise (°C)	25	25	26	26	27	27	28	28	29	31
		Med-High‡	Orange	Gas Heating, Alternate Cooling	CFM	1928	1897	1862	1830	1796	1764	1732	1698	1620	1512
					BHP	0.64	0.65	0.67	0.68	0.69	0.71	0.72	0.73	0.71	0.66
					Gas Heat Rise (°F)	44	45	46	47	48	49	49	50	53	57
					Gas Heat Rise (°C)	25	25	26	26	26	27	27	28	29	31
		High	Black	High Static Cooling Only	CFM	2212	2167	2124	2061	1976	1892	1794	1699	1567	1438
					BHP	0.97	0.99	1.00	0.97	0.95	0.91	0.86	0.82	0.77	0.71
60130	35 - 65 (19 - 36)	Low†	Blue		CFM	641	551	462	385	289	216	163	115	---	---
					BHP	0.05	0.06	0.06	0.07	0.07	0.08	0.08	0.09	---	---
					Gas Heat Rise (°F)	NA	NA	NA	NA	NA	NA	NA	NA	NA	NA
					Gas Heat Rise (°C)	NA	NA	NA	NA	NA	NA	NA	NA	NA	NA
		Med-Low	Pink		CFM	1437	1395	1351	1307	1265	1221	1176	1132	1084	1039
					BHP	0.29	0.30	0.31	0.32	0.33	0.34	0.35	0.36	0.37	0.38
					Gas Heat Rise (°F)	NA	NA	NA	NA	NA	NA	NA	NA	NA	NA
					Gas Heat Rise (°C)	NA	NA	NA	NA	NA	NA	NA	NA	NA	NA
		Medium**	Red	Cooling, Alternate Gas Heating	CFM	1914	1881	1848	1814	1780	1748	1716	1681	1619	1512
					BHP	0.62	0.64	0.65	0.67	0.68	0.69	0.71	0.72	0.71	0.66
					Gas Heat Rise (°F)	49	50	51	52	53	54	55	56	58	62
					Gas Heat Rise (°C)	27	28	28	29	29	30	31	31	32	35
		Med-High‡	Orange	Gas Heating, Alternate Cooling	CFM	1928	1897	1862	1830	1796	1764	1732	1698	1620	1512
					BHP	0.64	0.65	0.67	0.68	0.69	0.71	0.72	0.73	0.71	0.66
					Gas Heat Rise (°F)	49	50	51	52	53	54	55	56	58	62
					Gas Heat Rise (°C)	27	28	28	29	29	30	30	31	32	35
		High	Black	High Static Cooling Only	CFM	2212	2167	2124	2061	1976	1892	1794	1699	1567	1438
					BHP	0.97	0.99	1.00	0.97	0.95	0.91	0.86	0.82	0.77	0.71

Shaded areas indicate speed/static combinations that are not permitted for dehumidification speed.

*Air delivery values are without air filter and are for dry coil (See Wet Coil Pressure Drop table).

"High Static Cooling" = Only to be used for cooling function (Not allowed for gas heating function)

† Factory-shipped continuous fan speed

‡ Factory-shipped gas heating speed

**Factory-shipped cooling speed

"NA" = Not allowed for gas heating speed

NOTE: Deduct field-supplied air filter pressure drop and wet coil pressure drop to obtain static pressure available for ducting.

Manufacturer reserves the right to change, at any time, specifications and designs without notice and without obligations.

Filter Pressure Drop Table (IN. W.C.)

Filter Size in. (mm)	Cooling Tons	Standard CFM (SCFM)																
		600	700	800	900	1000	1100	1200	1300	1400	1500	1600	1700	1800	1900	2000	2100	2200
600-1400 CFM 12x20x1+12x20x1 (305x508x25+305x508x25)	2.0, 2.5	0.03	0.04	0.05	0.06	0.06	0.07	0.07	0.08	0.08	-	-	-	-	-	-	-	-
1200-1800 CFM 16x24x1+14x24x1 (406x610x25+356x610x25)	3.0, 3.5	-	-	-	-	0.04	0.05	0.06	0.07	0.08	0.09	0.09	0.10	0.11	0.12	0.12	-	-
1500-2200 CFM 16x24x1+18x24x1 (406x610x25+457x356x25)	4.0, 5.0	-	-	-	-	-	-	-	-	-	0.04	0.06	0.08	0.10	0.11	0.13	0.14	0.15

Wet Coil Pressure Drop (IN. W.C.)

Unit Size	Standard CFM (SCFM)																
	600	700	800	900	1000	1100	1200	1300	1400	1500	1600	1700	1800	1900	2000	2100	2200
24	0.03	0.04	0.04	0.05	0.06												
30				0.05	0.06	0.07	0.08	0.11									
36				0.06	0.06	0.09	0.10	0.11	0.14								
42					0.05	0.05	0.06	0.07	0.08	0.08	0.09	0.09	0.11				
48							0.04	0.06	0.09	0.10	0.10	0.11	0.12	0.13	0.14		
60										0.06	0.07	0.01	0.08	0.09	0.10	0.12	0.13

Economizer with 1-in. Filter Pressure Drop (IN. W.C.)

Filter Size in. (mm)	Cooling Tons	Standard CFM (SCFM)																
		600	700	800	900	1000	1100	1200	1300	1400	1500	1600	1700	1800	1900	2000	2100	2200
600-1400 CFM 12x20x1+12x20x1 (305x508x25+305x508x25)	2.0, 2.5	-	-	0.08	0.09	0.10	0.11	0.11	0.13	0.14	-	-	-	-	-	-	-	-
1200-1800 CFM 16x24x1+14x24x1 (406x610x25+356x610x25)	3.0, 3.5, 4.0	-	-	-	-	-	0.09	0.09	0.10	0.12	0.13	0.15	0.17	0.17	0.19	0.21	-	-
1500-2200 CFM 16x24x1+18x24x1 (406x610x25+457x356x25)	5.0	-	-	-	-	-	-	-	-	-	0.15	0.17	0.18	0.20	0.21	0.22	0.23	0.23

Manufacturer reserves the right to change, at any time, specifications and designs without notice and without obligations.

Typical Piping and Wiring

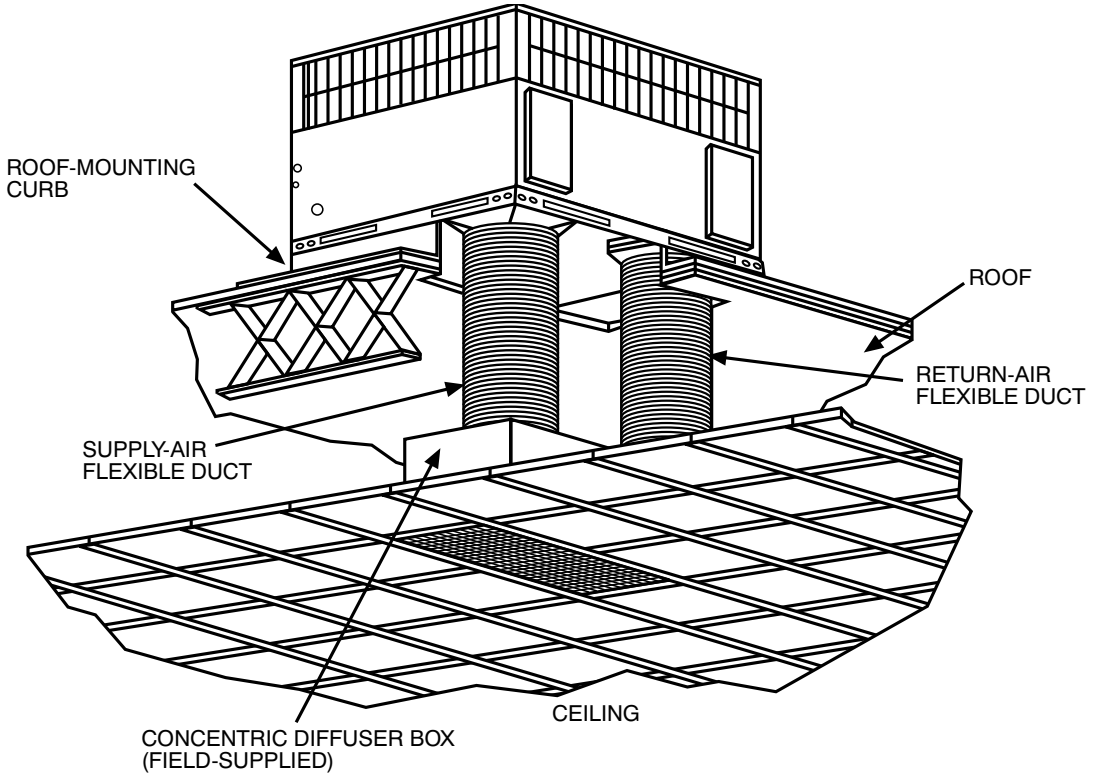

A09230

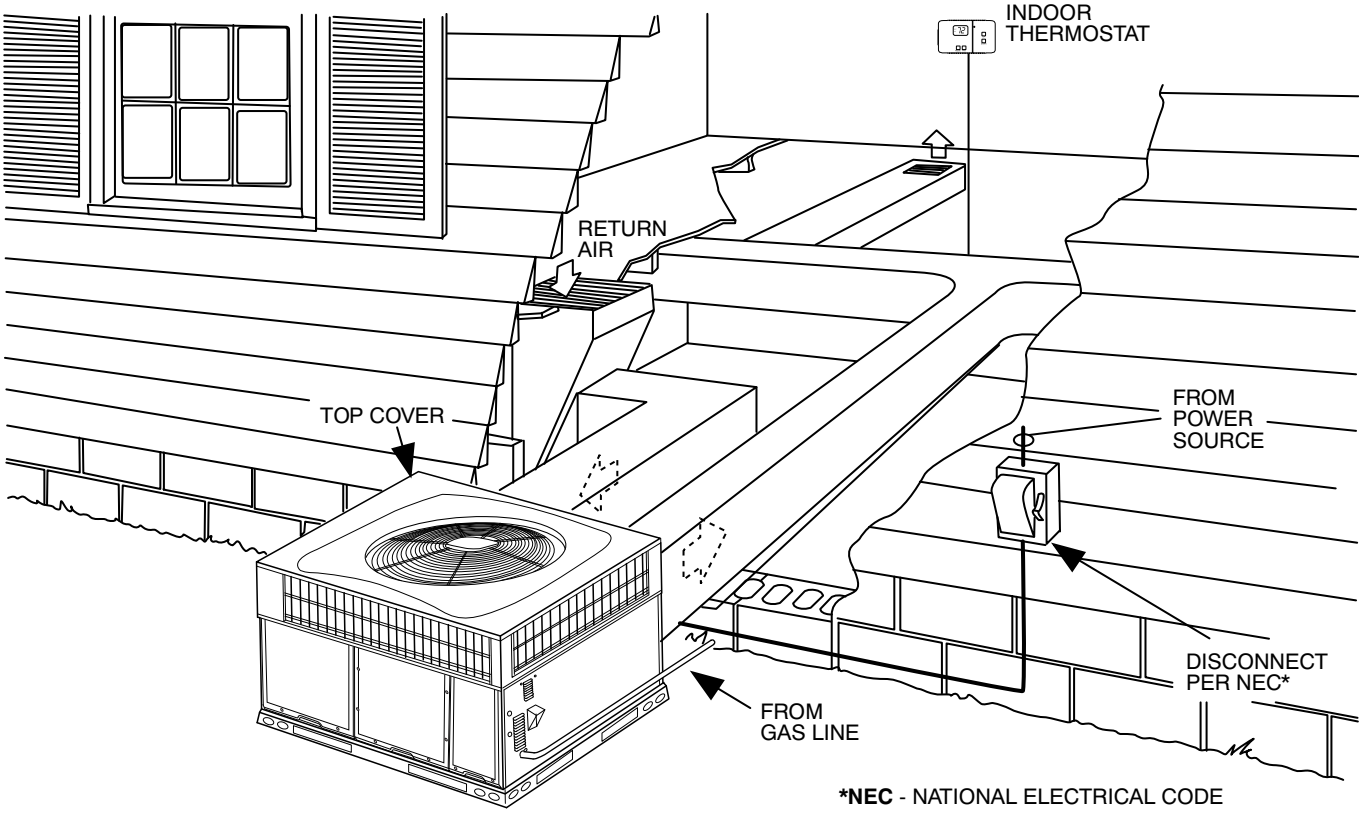

A09231

Application Data

Condensate trap — A 2-in. (51 mm) condensate trap must be field supplied.

Ductwork — Secure downflow discharge ductwork to roof curb. For horizontal discharge applications, attach ductwork to unit with flanges.

To convert a unit to downflow discharge — Units are equipped with factory-installed inserts in the down-flow openings. Removal of the inserts is similar to removing an electrical knock-out. The unit is factory equipped with duct covers to seal the horizontal discharge openings in the unit. Units installed in horizontal discharge orientation do not require duct covers.

Maximum cooling airflow — To minimize the possibility of condensate blow-off from the evaporator, airflow through the units should not exceed 450 cfm per ton.

Minimum cooling airflow — Minimum cooling airflow is 350 cfm per ton in cooling mode. Airflow can be lower in certain modes when humidity removal is an issue.

Minimum ambient cooling operation temperature — All standard units have a minimum ambient cooling operating temperature of 40°F (4.4°C). With accessory low ambient temperature kit, units can operate at temperatures down to 0°F (-17.8°C).

Maximum operating outdoor air temperature for cooling is 125°F (51.7°C).

Balance Point Worksheet

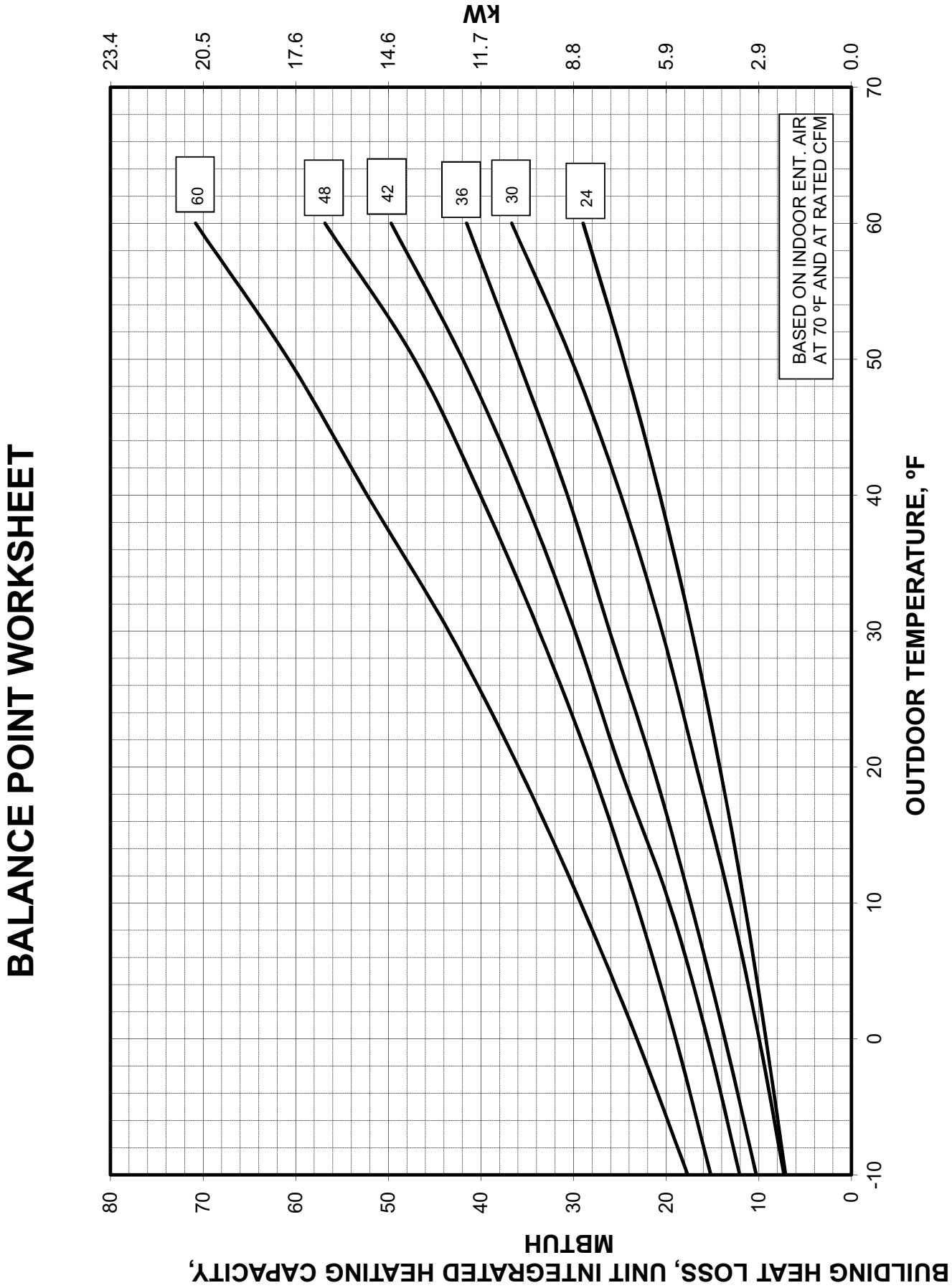

A150725

Electrical Data

MODEL	NOMINAL V-PH-HZ	VOLTAGE RANGE		COMPRESSOR		OFM	IFM	IDM	POWER SUPPLY	
		MIN	MAX	RLA	LRA	FLA	FLA	FLA	MCA	MOCP
24060	208/230-1-60	197	253	11.1	59.5	0.7	3.5	0.65	18.1	25
30060	208/230-1-60	197	253	13.2	72.2	1.2	3.9	0.65	21.6	30
36090	208/230-1-60	197	253	16	91.9	1.2	3.8	0.65	25	40
42090	208/230-1-60	197	253	18.6	110	1.1	5.8	0.65	30.2	45
48090, 48115	208/230-1-60	197	253	19.7	130	1.2	6.9	0.65	32.7	50
60115	208/230-1-60	197	253	27.7	124.5	1.1	6.9	0.65	42.6	60
60130	208/230-1-60	197	253	27.7	124.5	1.1	6.9	0.75	42.6	60

LEGEND

FLA - Full Load Amps
IDM - Inducer Motor
IFM - Indoor Fan Motor
LRA -Locked Rotor Amps
MCA - Minimum Circuit Amps
MOCP - Maximum Over Current Protection
OFM - Outdoor Fan Motor
RLA - Rated Load Amps

NOTES:

1. In compliance with NEC (National Electrical Code) requirements for multimotor and combination load equipment (refer to NEC Articles 430 and 440), the overcurrent protective device for the unit shall be Power Supply fuse or circuit breaker.
2. Minimum wire size is based on 60 C copper wire. If other than 60 C wire is used, or if length exceeds wire length in table, determine size from NEC.
3. Unbalanced 3-Phase Supply Voltage
   Never operate a motor where a phase imbalance in supply voltage is greater than 2%. Use the following formula to determine the percentage of voltage imbalance

   % Voltage imbalance

   $$= 100 \times \frac{\text{max voltage deviation from average voltage}}{\text{average voltage}}$$

EXAMPLE: Supply voltage is 230-3-60.

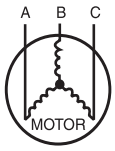

AB = 228 v
BC = 231 v
AC = 227 v

$$\text{Average Voltage} = \frac{228 + 231 + 227}{3} = \frac{686}{3} = 229$$

Determine maximum deviation from average voltage.
(AB) 229 - 228 = 1 v
(BC) 231 - 229 = 2 v
(AC) 229 - 227 = 2 v

Maximum deviation is 2 v.

Determine percent of voltage imbalance

$$\% \text{ Voltage Imbalance} = 100 \times \frac{2}{229} = 0.8\%$$

This amount of phase imbalance is satisfactory as it is below the maximum allowable 2%.

IMPORTANT: If the supply voltage phase imbalance is more than 2%, contact your local electric utility company immediately.

A06564

Typical Connection Wiring Schematic - 208/230-1-60

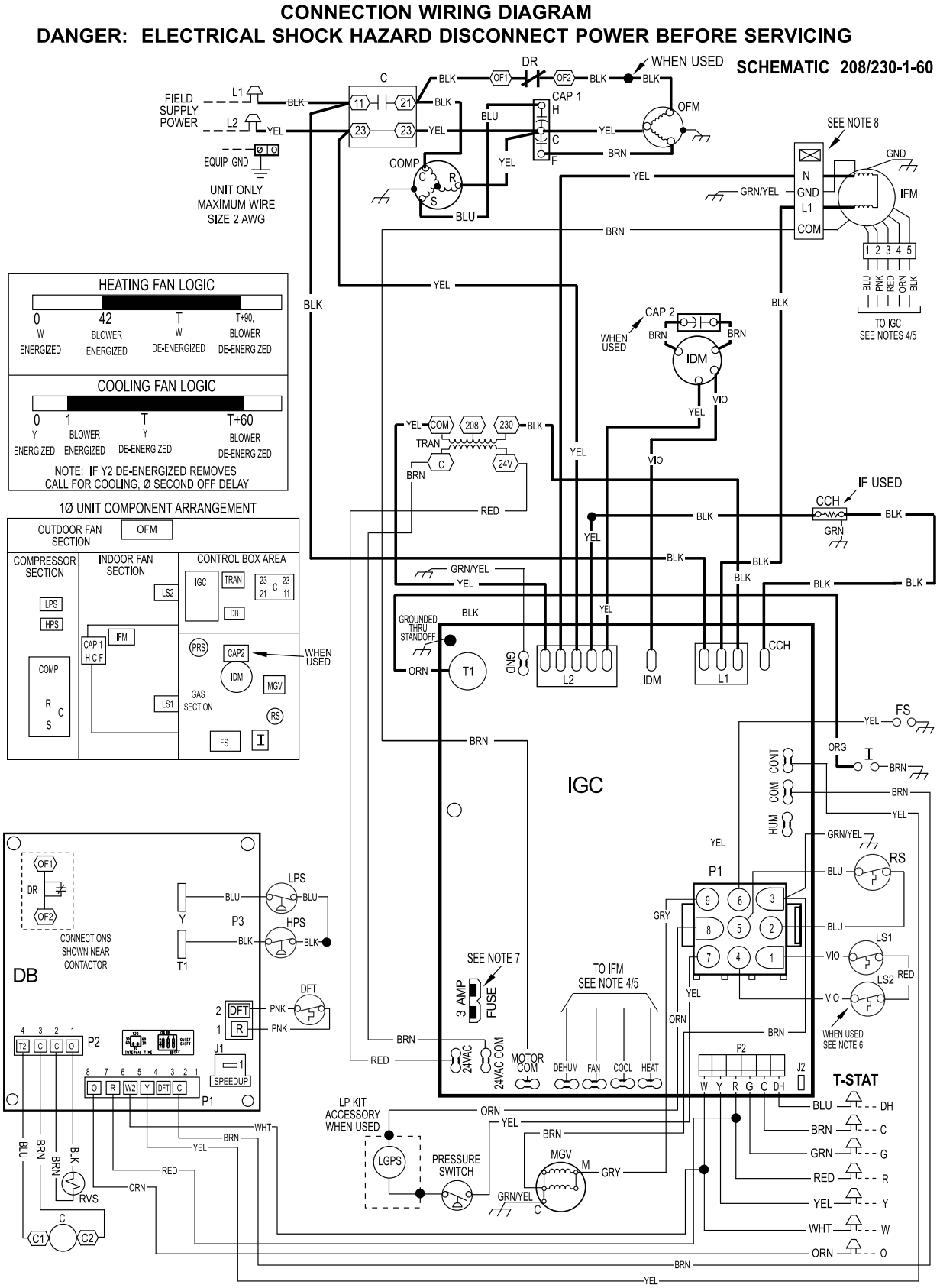

A230146

Typical Ladder Wiring Schematic - 208/230-1-60

LADDER WIRING DIAGRAM
DANGER: ELECTRICAL SHOCK HAZARD DISCONNECT POWER BEFORE SERVICING

LEGEND

	FIELD SPLICE	DFT	DEFROST TEMPERATURE SWITCH
	TERMINAL (MARKED)	DR	DEFROST RELAY (SEE DB)
	TERMINAL (UNMARKED)	EQUIP	EQUIPMENT
	SPLICE	FS	FLAME SENSOR
	SPLICE (MARKED)	GND	GROUND
	FACTORY LO VOLTAGE	HPS	HIGH PRESSURE SWITCH
	FIELD CONTROL WIRING	I	IGNITOR
	FIELD POWER WIRING	IDM	INDUCED DRAFT MOTOR
	ACCESSORY OR OPTIONAL WIRING	IDR	INDUCER RELAY
	FACTORY HI VOLTAGE	IFM	INDOOR FAN MOTOR
C	CONTACTOR	IGC	INTERGRATED GAS UNIT CONTROLLER
CAP1	CAPACITOR, COMP	LGPS	LOW GAS PRESSURE SWITCH (WHEN USED)
CAP2	CAPACITOR, INDUCER	LPS	LOW PRESSURE SWITCH
CCH	CRANKCASE HEATER	LS1	PRIMARY LIMIT SWITCH
COMP	COMPRESSOR MOTOR	LS2	SECONDARY LIMIT SWITCH
DB	DEFROST BOARD	MGV	MAIN GAS VALVE
		OFM	OUTDOOR FAN MOTOR
		OT	QUADRUPLE TERMINAL
		RS	ROLLOUT SWITCH
		TRAN	TRANSFORMER
		T-STAT	THERMOSTAT

DEFROST TIMING SELECTION

FIELD SELECTABLE OPTIONS FOR TIME PERIOD BETWEEN DEFROST CYCLES (MINUTES) FACTORY DEFROST SETTING IS 60 MIN.

SPEED UP — JUMPERED TEST PINS (USE METAL OBJECT) FIELD SPEED-UP CYCLE

1. DFT MUST BE CLOSED TO INITIATE DEFROST CYCLE. IF NECESSARY, REMOVE DFT CONNECTION BEFORE PLACING JUMPER ACCROSS DFT PINS.
2. AT THE SAME TIME DFT CLOSED, JUMPER "SPEED UP" PINS WITH SMALL SCREW DRIVER UNTIL DEFROST IS INITITATED. THEN REMOVE SCREW DRIVER.
3. SHORTED "SPEED UP" PINS WILL SPEED UP TIMER BY A FACTOR OF 256.

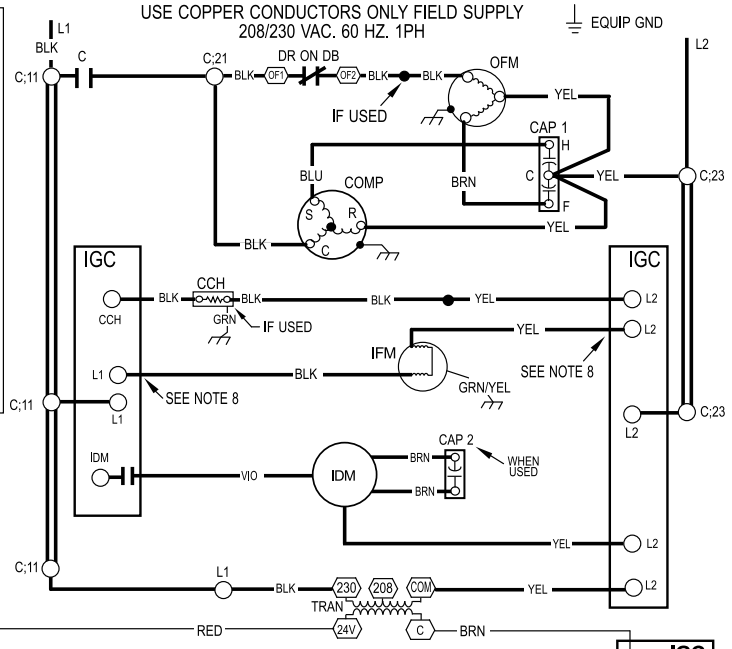

NOTES:

1. IF ANY OF THE ORIGINAL WIRES FURNISHED ARE REPLACED THEY MUST BE REPLACED WITH THE SAME WIRE OR ITS EQUIVALENT.
2. SEE PRE-SALE LITERATURE FOR THERMOSTATS.
3. USE 75 DEGREES C COPPER CONDUCTORS FOR FIELD INSTALLATION.
4. REFER TO INSTALLATION INSTRUCTIONS FOR CORRECT SPEED SELECTION FOR IFM.
5. SEE INSTALLATION INSTRUCTIONS FOR PROPER HEATING AND COOLING CONNECTIONS FOR YOUR UNIT.
6. ON SOME MODELS LS1 AND LS2 ARE WIRED IN SERIES. ON OTHER MODELS ONLY LS1 IS USED.
7. THIS FUSE IS MANUFACTURED BY LITTLE FUSE, P/N 287003.
8. DO NOT DISCONNECT PLUG UNDER LOAD.
9. N.E.C. CLASS 2, 24V.

349045-701 REV. B

349045-701 REV. B

A230147

Controls

Operating Sequence

When power is supplied to unit, the transformer (TRAN) is energized.

On units with crankcase heater, heater is also energized.

Cooling — With the thermostat subbase in the cooling position, the thermostat makes circuit “R” to “O”. This energizes the reversing valve solenoid (RVS) and places the unit in standby condition for cooling.

As the space temperature rises, the thermostat closes circuit “R” to “Y1/Y”. A circuit is made to contactor (C), starting the compressor (COMP) and outdoor-fan motor (OFM). Circuit “R” to “G” is made at the same time and starts the indoor-fan motor (IFM).

On the loss of the thermostat call for cooling, 24 V is removed from both the “Y1/Y” and “G” terminals (provided the fan switch is in the “AUTO” position) de-energizing the compressor contactor and opening the contacts supplying power to compressor/OFM. After a 60-second delay (1 phase models) the IFM shuts off. If the thermostat fan selector switch is in the “ON” position, the IFM will run continuously.

Gas Heating (Single Phase Models)

On a call for heating, terminal W of the thermostat is energized, starting the induced-draft motor for a 5 second pre-purge. When the pressure switch senses that the induced-draft motor is moving sufficient combustion air, the burner sequence begins. This function is controlled by the integrated gas unit controller (IGC). The indoor (evaporator) –fan motor is energized 30 seconds after flame is established. When the thermostat is satisfied and W is de-energized, the burners stop firing and the indoor (evaporator) fan motor shuts off after a 90 second time-off delay. Please note that the IGC has the capability to automatically reduce the indoor fan motor on delay and increase the indoor fan motor off delay in the event of high duct static and/or a partially-clogged filter.

Guide Specifications

Packaged Dual Fuel Units

HVAC Guide Specifications

Size Range: **2 to 5 Tons, Nominal Cooling**
40,000 to 127,000 Btuh,
Nominal Heating Input

General

System Description

Outdoor, packaged, air-to-air heat pump unit utilizing a hermetic scroll compressor for cooling duty and optional electric heating. Unit shall discharge supply air vertically or horizontally as shown on contract drawings. Outdoor fan/coil section shall have a draw-thru design with vertical discharge for minimum sound levels.

QUALITY ASSURANCE

- Unit shall be rated in accordance with AHRI Standards 210/240 and 270-1995.
- Unit shall be designed in accordance with UL Standard 1995 and ANSI Z21.47.
- Unit shall be manufactured in a facility registered to ISO 9001 manufacturing quality standard.
- Unit shall be UL listed and c-UL certified as a total package for safety requirements.
- Roof curb shall be designed to conform to NRCA Standards.
- Insulation and adhesives shall meet NFPA 90A requirements for flame spread and smoke generation.
- Cabinet insulation shall meet ASHRAE Standard 62P.

DELIVERY, STORAGE AND HANDLING

- Unit shall be stored and handled per manufacturer's recommendations.

Products

EQUIPMENT

General:

Factory-assembled, single-piece, heat pump unit. Contained within the enclosure shall be all factory wiring, piping, controls, refrigerant charge (R-410A), and special features required prior to field start-up.

Unit Cabinet:

- Unit cabinet shall be constructed of phosphated, zinc-coated, pre-painted steel capable of withstanding 500 hours of salt spray.
- Normal service shall be through 3 removable cabinet panels.
- The unit shall be constructed on a rust proof unit base that has an externally trapped, integrated sloped drain.
- Indoor fan compartment top surface shall be insulated with a minimum 1/2-in. (13 mm) thick, flexible fiberglass insulation, coated on the air side and retained by adhesive and mechanical means. The indoor wall sections will be insulated with a minimum semi-rigid, foil-faced board capable of being wiped clean. Aluminum foil-faced fiberglass insulation shall be used in the entire indoor air cavity section.
- Unit shall have a field-supplied condensate trap.
- Metal Insulated Duct Covers for side discharge will be standard on all sizes.
- Unit insulation conforms to ASHRAE 62P.

Fans:

- The evaporator fan motor shall be a ECM Motor.
- Fan wheel shall be made from steel, be double-inlet type with forward curved blades with corrosion resistant finish. Fan wheel shall be dynamically balanced.
- Condenser fan shall be direct drive propeller type with aluminum blades riveted to corrosion resistant steel spiders, be dynamically balanced, and discharge air vertically.

Compressor:

- Fully hermetic compressors with factory-installed vibration isolation.
- Scroll compressors shall be standard on all units.

Coils:

Indoor coils shall have aluminum plate fins mechanically bonded to seamless aluminum tubes with all joints brazed. Tube sheet openings shall be belled to prevent tube wear. Outdoor coil shall have aluminum fins with copper tubing.

Refrigerant Metering Device:

Refrigerant metering device shall be thermostatic expansion valve or fixed orifice for cooling, and fixed orifice for heating.

Filters:

Filter section shall consist of field-installed, throwaway, 1-in. (25 mm)-thick fiberglass filters of commercially available sizes.

Controls and Safeties:

- Unit controls shall be complete with a self-contained, low- voltage control circuit.
- Units shall incorporate an internal compressor protector that provides reset capability.

Operating Characteristics:

- Unit shall be capable of starting and running at 125°F (51.7°C) ambient outdoor temperature.
- Compressor with standard controls shall be capable of operation down to 40°F (4.4°C) ambient outdoor temperature in cooling mode.
- Unit shall be provided with 60-second fan time (single phase), after the thermostat is satisfied.

Electrical Requirements:

All unit power wiring shall enter the unit cabinet at a single location.

Motors:

- Compressor motors shall be of the refrigerant-cooled type with line-break thermal and current overload protection.
- All fan motors shall have permanently lubricated bearings, and inherent, automatic reset, thermal overload protection.
- Condenser fan motor shall be totally enclosed.
- Evaporator Fan Motor to be ECM Motor.

Compressor Protection:

Solid-state control shall protect compressor by preventing "short cycling."

Low NOx:

Shall provide NOx reduction to meet 40 ng/J NOx emissions requirements as shipped from the factory.

Manufacturer reserves the right to change, at any time, specifications and designs without notice and without obligations.

Guide Specifications (Cont)

Special Features Available:

1. Compressor Start Kit
   Shall provide additional starting torque for single-phase compressors.
2. Thermostat:
   To provide for dual fuel two stage heating and one stage cooling in addition manual or automatic changeover and indoor fan control.
3. Crankcase Heater:
   Shall provide anti-floodback protection for lowload cooling applications.
4. Economizer:
   (Horizontal - Field installed accessory)
   (Vertical - Field installed accessory)
   a. Economizer controls capable of providing free cooling using outside air.
   b. Equipped with low leakage dampers not to exceed 3% leakage, at 1.0 IN. W.C. pressure differential.
   c. Spring return motor shuts off outdoor damper on power failure.
5. Filter Rack Kit: Shall provide filter mounting for downflow applications. Offered as a field installed accessory.
6. Flat Roof Curb:
   Curbs shall have seal strip and a wood nailer for flashing and shall be installed per manufacturer's instructions.
7. Flue Discharge Deflector
   Directs flue gas exhaust 90 degrees upward from current discharge.
8. Cabinet air leakage of 2.0% or less at .5 in. W.C. when tested in accordance with ASHRAE standard 193. Available as a factory installed option.
9. High Altitude Propane Conversion Kit
   Shall consist of all required hardware to convert to propane gas heat operation at 2001 to 6000 ft (611 to 1829 m) above sea level.
10. Low Ambient Package:
    Shall consist of a solid-state control and outdoor coil temperature sensor for controlling outdoor-fan motor operation, which shall allow unit to operate down to 0°F (17.7°C) outdoor ambient temperature.
11. Manual Outdoor Air Damper:
    Package shall consist of damper, birdscreen, and rainhood which can be preset to admit outdoor air for year-round ventilation.
12. Natural-to-Propane Conversion Kit:
    Shall be complete with all required hardware to convert to propane gas operation at standard altitude (0 to 2000 ft [0-610 m] above sea level).
13. Propane-to-Natural Conversion Kit:
    Shall be complete with all hardware to convert to natural gas at standard altitude (0 to 2000 ft [0 to 610 m] above sea level).
14. Square-To-Round Duct Transitions (24-48 models):
    Shall have the ability to convert the supply and return openings from rectangular to round.
15. Louver Metal Outdoor Coil Grille
    Shall provide hail and vandalism protection. Available as a field installed accessory.

© 2023 Carrier. All rights reserved.

Manufacturer reserves the right to change, at any time, specifications and designs without notice and without obligations.