SERVICE AND TECHNICAL SUPPORT MANUAL

Two–Stage, ECM Blower Motor
35” Tall, High Efficiency Condensing Gas Furnace
(F/G)9MXT

Save this manual for future reference.

Safety Labeling and Signal Words

DANGER, WARNING, CAUTION, and NOTE
The signal words **DANGER, WARNING**, **CAUTION**, and **NOTE** are used to identify levels of hazard seriousness. The signal word **DANGER** is only used on product labels to signify an immediate hazard. The signal words **WARNING**, **CAUTION**, and **NOTE** will be used on product labels and throughout this manual and other manual that may apply to the product.

DANGER – Immediate hazards which will result in severe personal injury or death.

WARNING – Hazards or unsafe practices which could result in severe personal injury or death.

CAUTION – Hazards or unsafe practices which may result in minor personal injury or product or property damage.

NOTE – Used to highlight suggestions which will result in enhanced installation, reliability, or operation.

Signal Words in Manuals

The signal word **WARNING** is used throughout this manual in the following manner:

⚠ WARNING

The signal word **CAUTION** is used throughout this manual in the following manner:

⚠ CAUTION

Signal Words on Product Labeling

Signal words are used in combination with colors and/or pictures or product labels.

⚠ Safety–alert symbol
When you see this symbol on the unit and in instructions or manuals, be alert to the potential for personal injury.

TABLE OF CONTENTS

START–UP, ADJUSTMENT, AND SAFETY CHECK 4
THERMOSTAT SETUP SWITCH 4
PRIME CONDENSATE TRAP WITH WATER 4
PURGE GAS LINES 4
ADJUSTMENTS 5
ADJUST TEMPERATURE RISE 10
ADJUST BLOWER OFF DELAY (HEAT MODE) 11
ADJUST COOLING AIRFLOW 11
ADJUST CONTINUOUS FAN AIRFLOW 11
ADJUST THERMOSTAT HEAT ANTICIPATOR 11
CHECK SAFETY CONTROLS 12
CHECKLIST 12
SERVICE AND MAINTENANCE PROCEDURES 13
ELECTRICAL CONTROLS AND WIRING 13
TROUBLESHOOTING 13
CLEANING AND/OR REPLACING AIR FILTER 15
BLOWER MOTOR AND WHEEL MAINTENANCE 15
CLEANING BURNERS AND FLAME SENSOR 17
SERVICING HOT SURFACE IGNITER 18
FLUSHING COLLECTOR BOX AND DRAINAGE SYSTEM 18
CLEANING CONDENSATE DRAIN AND TRAP 19
CLEANING HEAT EXCHANGERS 19
SERVICE LABEL 21
WIRING DIAGRAM 22
SEQUENCE OF OPERATION 25
PARTS REPLACEMENT INFORMATION GUIDE 29
PRODUCT NOMENCLATURE 30

MODELS

(F/G)9MXT0401410A
(F/G)9MXT0401712A
(F/G)9MXT0601412A
(F/G)9MXT0601714A
(F/G)9MXT0801716A
(F/G)9MXT0802120A
(F/G)9MXT1002120A
(F/G)9MXT1202422A

Certified System ISO 9001 QMI-SAI Global

DESIGN CERTIFIED

CERTIFIED

AHRI CERTIFIED www.ahridirectory.org

Use of the AHRI Certified TM Mark indicates a manufacturer’s participation in the program. For verification of certification for individual products, go to www.ahridirectory.org .

Printed in U.S.A.

440 04 4321 06 7/16/13

SAFETY CONSIDERATIONS

Improper installation, adjustment, alteration, service, maintenance, or use can cause explosion, fire, electrical shock, or other conditions which may cause death, personal injury, or property damage. Consult a qualified installer, service agency, or your distributor or branch for information or assistance. The qualified installer or agency must use factory–authorized kits or accessories when modifying this product. Refer to the individual instructions packaged with the kits or accessories when installing.

Follow all safety codes. Wear safety glasses, protective clothing, and work gloves. Use quenching cloth for brazing operations. Have fire extinguisher available. Read these instructions thoroughly and follow all warnings or cautions included in literature and attached to the unit. Consult local building codes, the current editions of the National Fuel Gas Code (NFCG) NFPA 54/ANSI Z223.1, and the National Electrical Code (NEC) NFPA 70.

In Canada refer to the current editions of the National standards of Canada CAN/CSA–B149.1 and .2 Natural Gas and Propane Installation Codes, and Canadian Electrical Code CSA C22.1.

Recognize safety information. This is the safety–alert symbol ⚠. When you see this symbol on the unit and in instructions or manuals, be alert to the potential for personal injury. Understand these signal words; DANGER, WARNING, and CAUTION. These words are used with the safety–alert symbol. DANGER identifies the most serious hazards which **will** result in severe personal injury or death. WARNING signifies hazards which **could** result in personal injury or death. CAUTION is used to identify unsafe practices which **may** result in minor personal injury or product and property damage. NOTE is used to highlight suggestions which **will** result in enhanced installation, reliability, or operation.

⚠ WARNING

PERSONAL INJURY, AND/OR PROPERTY DAMAGE HAZARD

Failure to carefully read and follow this warning could result in equipment malfunction, property damage, personal injury and/or death.

Installation or repairs made by unqualified persons could result in equipment malfunction, property damage, personal injury and/or death.

The information contained in this manual is intended for use by a qualified service technician familiar with safety procedures and equipped with proper tools and test instruments.

Installation must conform with local building codes and with the Natural Fuel Gas Code (NFCG) NFPA 54/ANSI Z223.1, and National standards of Canada CAN/CSA–B149.1 and .2 Natural Gas and Propane Installation Codes.

⚠ WARNING

ELECTRICAL SHOCK HAZARD

Failure to follow this warning could cause personal injury or death.

Before performing service or maintenance operations on unit, always turn off main power switch to unit and install lockout tag. Unit may have more than one power switch.

⚠ WARNING

CARBON MONOXIDE POISONING AND FIRE HAZARD

Failure to follow safety warnings could result in personal injury, death, and/or property damage.

This furnace is not designed for use in mobile homes, trailers or recreational vehicles.

⚠ CAUTION

CUT HAZARD

Failure to follow this caution may result in damage personal injury.

Sheet metal parts may have sharp edges or burrs. Use care and wear appropriate protective clothing, safety glasses and gloves when handling parts and servicing furnaces.

START–UP CHECK SHEET
For PSC Models (F/G)9MXT

(This sheet is optional. Keep for future reference.)

Date of Start–Up:_____

Dealer Name:_____

Address:_____

City, State(Province), Zip or Postal Code:_____

_____

Phone:_____

Owner Name:_____

Address:_____

City, State(Province), Zip or Postal Code:_____

_____

Model Number:_____

Serial Number:_____

Setup Checks

Check the box when task is complete.

All Electrical Connections Tight? ☐

Have hoses been relocated for furnace U/D/H application? ☐

Condensate Drain Connected? ☐

Condensate Drain Trapped? ☐

Manual Gas Shut–off Upstream of Furnace/Drip Leg ☐

Gas Valve turned ON? ☐

Type of Gas: Natural: ☐ Propane: ☐

Filter Type and Size:_____

Shade in Heating Fan "Time **OFF**" Setting and Thermostat Type setting:

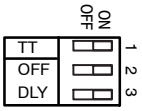

Calculated Input (BTU) Rate: (See *Checks and Adjustments* Section).

Heating Check

Measured Line Pressure During High Heat: _____

Measured Manifold Pressure: High Heat _____

Low Heat _____

Temperature of Supply Air: High Heat _____

Low Heat _____

Temperature of Return Air: _____

Temperature Rise (Supply – Return): High Heat _____

Low Heat _____

In Rise Range (see furnace rating plate)? ☐

Static Pressure (Ducts) High Heat: Supply _____

Return _____

The Blower Speed Tap used for: High Heat _____

Low Heat _____

Optional Check: CO? _____

CO2? _____

Cooling Check

Temperature of Supply Air: _____

Temperature of Return Air: _____

Temperature Difference: _____

Static Pressure (Ducts) Cooling: Supply _____

Return _____

The Blower Speed Tap used for: Cooling _____

Dealer Comments:_____

_____

_____

_____

_____

_____

_____

_____

_____

Specifications subject to change without notice.

START–UP, ADJUSTMENT, AND SAFETY CHECK

General

1. Furnace must have a 115-v power supply properly connected and grounded.

NOTE: Proper polarity must be maintained for 115-v wiring. Control status indicator light flashes code 10 and furnace does not operate if polarity is incorrect or if the furnace is not grounded.

2. Thermostat wire connections at terminals R, W/W1, G, and Y/Y2 must be made at 24-v terminal block on furnace control.
3. Natural gas service pressure must not exceed 0.5 psig (14-in. w.c., 350 Pa), but must be no less than 0.16 psig (4.5-in. w.c., 1125 Pa).
4. Blower door must be in place to complete 115-v electrical circuit and supply power to the furnace components.

⚠ CAUTION

UNIT OPERATION HAZARD

Failure to follow this caution may result in intermittent unit operation or performance dissatisfaction.

These furnaces are equipped with a manual reset limit switch in burner assembly. This switch opens and shuts off power to the gas valve if an overheat condition (flame rollout) occurs in the burner assembly/enclosure. Correct inadequate combustion-air supply, improper gas pressure setting, improper burner or gas orifice positioning, or improper venting condition before resetting switch. DO NOT jumper this switch.

Before operating furnace, check flame rollout manual reset switch for continuity. If necessary, press button to reset switch.

EAC-1 terminal is energized whenever blower operates. HUM terminal is only energized when the the gas valve is energized in heating.

Thermostat Setup Switch

This furnace can be installed with either a single–stage heating or a two–stage heating thermostat. Setup switch SW–1 (TT) is used to configure the furnace for single or two stage thermostat operation. (See **Figure 4**)

For single–stage thermostats, connect thermostat W to W/W1 at furnace control terminal block. (See **Figure 7**) For single–stage thermostats, the control will operate for 12 minutes on low heat, then switch to high heat if heat call remains. Setup switch SW–1 (TT) must be in the factory–shipped OFF position. See **Figure 7** and **Figure 15** for setup switch information.

If a two–stage heating thermostat is to be used, move setup switch SW–1 (TT) to ON position before starting furnace. This overrides built–in control process for selecting high and low heat and allows the two–stage thermostat to select gas heating modes. The W2 from thermostat must be connected to W2 on control terminal block.

Prime Condensate Trap with Water

⚠ WARNING

FIRE OR EXPLOSION HAZARD

Failure to follow these warnings could result in personal injury or death.

Failure to use a properly configured trap or NOT water-priming trap before operating furnace may allow positive pressure vent gases to enter the structure through drain tube. Vent gases contain carbon monoxide which is tasteless and odorless.

1. Remove upper and middle collector box drain plugs opposite of the condensate trap. (See **Figure 1**)
2. Connect field-supplied 5/8-in. (16 mm) ID tube with attached funnel (see **Figure 1**) to upper collector box drain connection.
3. Pour one quart (liter) of water into funnel/tube. Water should run through collector box, overfill condensate trap, and flow into open field drain.
4. Remove funnel; replace collector box drain plug.
5. Connect field-supplied 5/8-in. (16 mm) ID tube to middle collector box drain port.
6. Pour one quart (liter) of water into funnel/tube. Water should run through collector box, overfill condensate trap, and flow into open field drain.
7. Remove funnel and tube from collector box and replace collector box drain plug.

Figure 1 Priming Condensate Drain

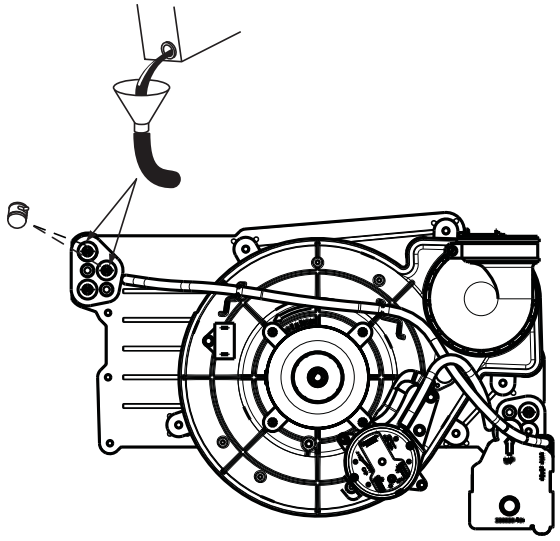

Representative drawing only, some models may vary in appearance.

L11F065

Purge Gas Lines

If not previously done, purge the lines after all connections have been made and check for leaks.

⚠ WARNING

FIRE OR EXPLOSION HAZARD

Failure to follow this warning could result in personal injury, death, and/or property damage.

Never purge a gas line into a combustion chamber. Never test for gas leaks with an open flame. Use a commercially available soap solution made specifically for the detection of leaks to check all connections. A fire or explosion may result causing property damage, personal injury or loss of life.

Adjustments

⚠ WARNING

FIRE HAZARD

Failure to follow this warning could result in personal injury, death and/or property damage.

DO NOT bottom out gas valve regulator adjusting screw. This can result in unregulated manifold pressure and result in excess overfire and heat exchanger failures.

⚠ CAUTION

FURNACE DAMAGE HAZARD

Failure to follow this caution may result in reduced furnace life.

DO NOT redrill orifices. Improper drilling (burrs, out–of–round holes, etc.) can cause excessive burner noise and misdirection of burner flames. This can result in flame impingement of heat exchangers, causing failures. (See **Figure 2**)

Figure 2 **Orifice Hole**

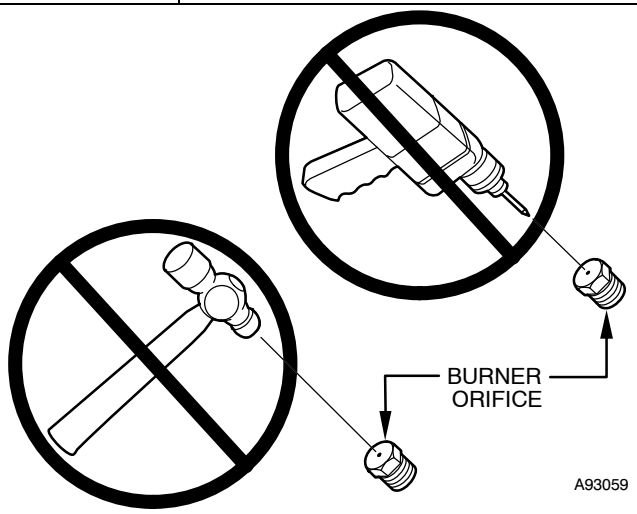

For proper operation and long term reliability the furnace input rate must be within +/–2 percent of input rate on furnace rating plate, or as adjusted for altitude.

The gas input rate on rating plate is for installation at altitudes up to 2000 ft. (610 M).

NOTICE

The NATURAL GAS manifold pressure adjustments in **Table 3** compensate for BOTH altitude AND gas heating value. DO NOT apply an additional de–rate factor to the pressures shown in **Table 3**.

The heating content of natural gas at altitude may already provide for a reduction in capacity or altitude. Refer to **Table 3**. No adjustments to the furnace may be necessary at altitude for certain gas heating values.

Refer to the instructions provided in the factory-specified LP/Propane conversion kit for instructions for setting gas manifold pressures for LP/Propane applications.

In the USA, the input rating for altitudes above 2000 ft. (610 M) must be reduced by 2 percent for each 1000 ft. (305 M) above sea level refer to **Table 1**. The natural gas manifold pressures in **Table 3** adjust for BOTH altitude and natural gas heating value.

In Canada, the input rating must be reduced by 5 percent for altitudes of 2000 ft. to 4500 ft. (610 to 1372 M) above sea level. The natural gas manifold pressures in **Table 3** adjust for BOTH altitude and natural gas heating value.

Table 1 **Altitude Derate Multiplier for USA**

ALTITUDE FT. (M)	PERCENT OF DERATE	DERATE MULTIPLIER FACTOR*
0–2000 (0–610)	0	1.00
2001–3000 (610–914)	4–6	0.95
3001–4000 (914–1219)	6–8	0.93
4001–5000 (1219–1524)	8–10	0.91
5001–6000 (1524–1829)	10–12	0.89
6001–7000 (1829–2134)	12–14	0.87
7001–8000 (2134–2438)	14–16	0.85
8001–9000 (2438–2743)	16–18	0.83
9001–10,000 (2743–3048)	18–20	0.81

* Derate multiplier factors are based on midpoint altitude for altitude range.

NOTE: **For Canadian altitudes of 2000 to 4500 ft. (610 to 1372 M), use USA altitudes of 2001 to 3000 ft. (610 to 914 M)** in **Table 3**.

To adjust manifold pressure to obtain the proper input rate, first, determine if the furnace has the correct orifice installed. At higher altitudes or different gas heat contents, it may be necessary to change the factory orifice to a different orifice. Tables have been provided in the furnace Service and Technical Manual to match the required orifice to the manifold pressure to the heat content and specific gravity of the gas. to do this:

1. Obtain average yearly gas heat value (at installed altitude) from local gas supplier.
2. Obtain average yearly gas specific gravity from local gas supplier.
3. Find installation altitude in **Table 3**.
4. Find closest natural gas heat value and specific gravity in **Table 3**. Follow heat value and specific gravity lines to point of intersection to find orifice size and low-and high-heat manifold pressure settings for proper operation.
5. Check and verify burner orifice size in furnace. NEVER ASSUME ORIFICE SIZE. ALWAYS CHECK AND VERIFY.

NOTICE

If orifice hole appears damaged or it is suspected to have been redrilled, check orifice hole with a numbered drill bit of correct size. Never redrill an orifice. A burr−free and squarely aligned orifice hole is essential for proper flame characteristics.

6. Replace orifice with correct size, if required by **Table 3**. Use only factory−supplied orifices. See EXAMPLE 1.

EXAMPLE 1:

0 - 2000 ft. (0 - 609.6M) altitude
Heating value = 1050 Btu/cu ft.
Specific gravity = 0.62
Therefore: Orifice No. 44

(Furnace is shipped with No. 44 orifices. In this example, all main burner orifices are the correct size and do not need to be changed to obtain proper input rate.)

Manifold pressure: 3.4-in. w.c. (847 Pa) for high heat, 1.4-in. w.c. (349 Pa) for low heat

NOTE: To convert gas manifold Table pressures to Pascals, multiply the in.w.c. value by 249.1 Pa/in. w.c. (1 in. wc. = 249.1 Pa).

Check Inlet Gas Pressure

The inlet gas pressure must be checked with the furnace operating in maximum heat. This is necessary to make sure the inlet gas pressure does not fall below the minimum pressure of 4.5 in. w.c.

1. Make sure the gas supply is turned off to the furnace and at the electric switch on the gas valve.
2. Remove the 1/8 in. NPT plug from the inlet pressure tap on the gas valve.
3. Connect a manometer to the inlet pressure tap on gas valve.
4. Turn on furnace power supply.
5. Turn gas supply manual shutoff valve to ON position.
6. Turn furnace gas valve switch to ON position.
7. Jumper the R to W/W1 and W2 thermostat connections at the furnace control board.
8. When main burners ignite, confirm inlet gas pressure is between 4.5 in. w.c. (1125 Pa) and 13.6 in. w.c. (3388 Pa).
9. Remove jumper across thermostat connections to terminate call for heat. Wait until the blower off delay is completed.
10. Turn furnace gas valve electric switch to OFF position.
11. Turn gas supply manual shutoff valve to OFF position.
12. Turn off furnace power supply.
13. Remove manometer from the inlet pressure tap of the gas valve.

⚠ WARNING

FIRE HAZARD

Failure to follow this warning could result in personal injury, death, and/or property damage.

Re−install manifold pressure tap plug in gas valve to prevent gas leak.

14. Apply pipe dope sparingly to end of inlet gas pipe plug and re−install in the gas valve.

Adjust Manifold Pressure

1. Adjust manifold pressure to obtain low fire input rate. (See **Figure 3**)
   a. Turn gas valve ON/OFF switch to OFF.
   b. Remove manifold pressure tap plug from gas valve.
   c. Connect a water column manometer or similar device to manifold pressure tap.
   d. Turn gas valve ON/OFF switch to ON.
   e. Move setup switch SW−1 (TT) on furnace control to ON position to lock furnace in low−heat operation. (See **Figure 4** and **Figure 15**)
   f. Manually close blower door switch.
   g. Jumper R and W/W1 thermostat connections on control to start furnace. (See **Figure 4**)
   h. Remove regulator adjustment cap from low heat gas valve pressure regulator (See **Figure 3**) and turn low−heat adjusting screw (3/16 or smaller flat−tipped screwdriver) counterclockwise (out) to decrease input rate or clockwise (in) to increase input rate.

NOTICE

DO NOT set low−heat manifold pressure less than 1.3−in. w.c. (324 Pa) or more than 1.7−in. w.c. (423 Pa) for natural gas. If required manifold pressure is outside this range, change main burner orifices.

Figure 3 **Redundant Automatic Gas Control Valve (2−Stage)**

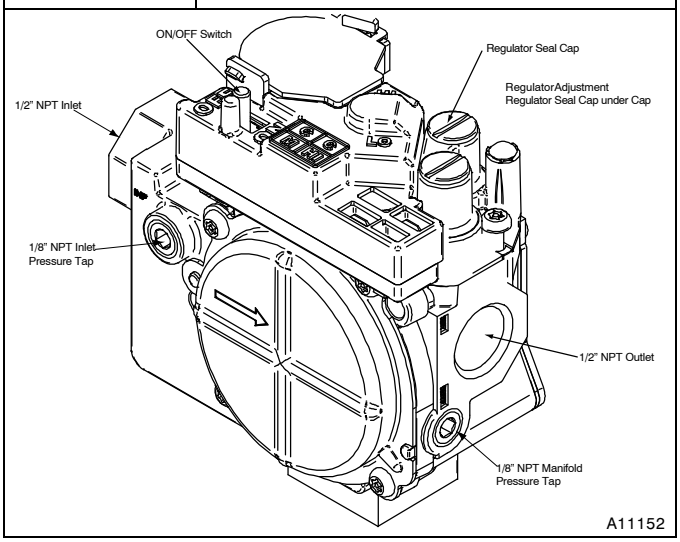

   i. Install low−heat regulator adjustment cap.
   j. Move setup switch SW−1 (TT) to off position after completing low−heat adjustment.
   k. Leave manometer or similar device connected and proceed to Step 2.
2. Adjust manifold pressure to obtain high fire input rate. (See **Figure 3**)
   a. Jumper R to W/W1 and W2 thermostat connections on furnace control. This keeps furnace locked in high−heat operation.
   b. Remove regulator adjustment cap from high−heat gas valve pressure regulator (See **Figure 3**) and turn high heat adjusting screw (3/16−in. or smaller flat−tipped screwdriver) counterclockwise (out) to decrease input rate or clockwise (in) to increase input rate.

NOTICE

DO NOT set high–heat manifold pressure less than 3.2–in. w.c. (797 Pa) or more than 3.8 in. w.c. (947 Pa) for natural gas. If required manifold pressure is outside this range, change main burner orifices to obtain manifold pressure in this range.

c. When correct input is obtained, replace caps that conceal gas valve regulator adjustment screws. Main burner flame should be clear blue, almost transparent. (See **Figure 13**)

d. Reinstall manifold pressure tap plug to gas valve.

e. Remove jumpers R to W/W1 and R to W2.

3. Verify natural gas input rate by clocking meter.

NOTE: Contact your HVAC distributor or gas supplier for metric gas meter Tables, if required.

a. Turn off all other gas appliances and pilots served by the meter.

b. Move setup switch SW–1 (TT) to ON position. This keeps furnace locked in low–heat operation when only W/W1 is energized.

c. Jumper R to W/W1.

d. Run furnace for 3 minutes in low–heat operation.

e. Measure time (in sec) for gas meter to complete one revolution and note reading. The 2 or 5 cubic feet dial provides a more accurate measurement of gas flow.

f. Refer to **Table 2** for cubic ft. of gas per hr.

g. Multiply gas rate cu ft./hr by heating value (Btuh/cu ft.) to obtain input rate.

h. If clocked rate does not match required input from Step 1, increase manifold pressure to increase input or decrease manifold pressure to decrease input. Repeat steps b through e of Step 1 until correct low–heat input is achieved. Re–install low heat regulator seal cap on gas valve.

i. Jumper R to W/W1, and W2. This keeps furnace locked in high--heat operation when both W/W1 and W2 are energized.

j. Repeat items (d) through (h) for high-heat operation, repeating Step 2 and adjusting the high-heat regulator screw, as required.

4. Restore furnace to normal operating condition.

a. Turn gas valve ON/OFF switch to OFF.

b. Remove water column manometer or similar device from manifold pressure tap.

c. Replace manifold pressure tap plug to gas valve.

d. Turn gas valve ON/OFF switch to ON.

e. Move setup SW-1 switch (TT) on furnace control to position required for attached thermostat (OFF for single-stage thermostats, ON for two-stage thermostats).

f. Check for gas leaks and verify furnace operation.

⚠ WARNING

FIRE HAZARD

Failure to follow this warning could result in personal injury, death, and/or property damage.

Re–install manifold pressure tap plug in gas valve to prevent gas leak.

Figure 4 **Example of Two–Stage Furnace Control Board**

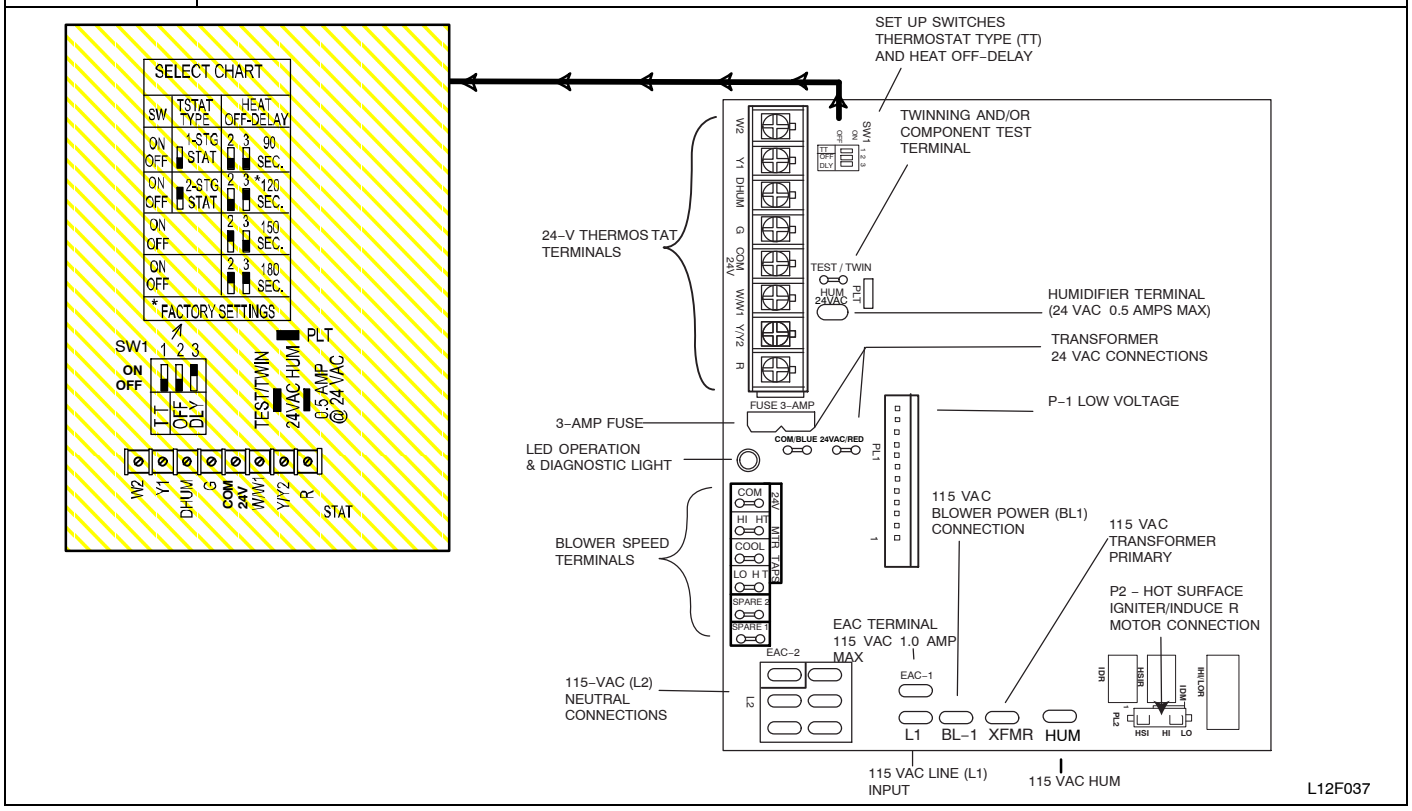

Table 2	Gas Rate (CU ft./hr)						
SECONDS G FOR 1 REVOLUTION	SIZE OF TEST DIAL			SECONDS FOR 1 REVOLUTION	SIZE OF TEST DIAL		
	1 Cu Ft.	2 Cu Ft.	5 Cu Ft.		1 Cu Ft.	2 Cu Ft.	5 Cu Ft.
10	360	720	1800	50	72	144	360
11	327	655	1636	51	71	141	355
12	300	600	1500	52	69	138	346
13	277	555	1385	53	68	136	340
14	257	514	1286	54	67	133	333
15	240	480	1200	55	65	131	327
16	225	450	1125	56	64	129	321
17	212	424	1059	57	63	126	316
18	200	400	1000	58	62	124	310
19	189	379	947	59	61	122	305
20	180	360	900	60	60	120	300
21	171	343	857	62	58	116	290
22	164	327	818	64	56	112	281
23	157	313	783	66	54	109	273
24	150	300	750	68	53	106	265
25	144	288	720	70	51	103	257
26	138	277	692	72	50	100	250
27	133	267	667	74	48	97	243
28	129	257	643	76	47	95	237
29	124	248	621	78	46	92	231
30	120	240	600	80	45	90	225
31	116	232	581	82	44	88	220
32	113	225	563	84	43	86	214
33	109	218	545	86	42	84	209
34	106	212	529	88	41	82	205
35	103	206	514	90	40	80	200
36	100	200	500	92	39	78	196
37	97	195	486	94	38	76	192
38	95	189	474	96	38	75	188
39	92	185	462	98	37	74	184
40	90	180	450	100	36	72	180
41	88	176	439	102	35	71	178
42	86	172	429	104	35	69	173
43	84	167	419	106	34	68	170
44	82	164	409	108	33	67	167
45	80	160	400	110	33	65	164
46	78	157	391	112	32	64	161
47	76	153	383	116	31	62	155
48	75	150	375	120	30	60	150
49	73	147	367				

Table 3 Orifice Size and Manifold Pressure (in. w.c.) for Gas Input Rate

TWO-STAGE FURNACE

(TABULATED DATA BASED ON 20,000 BTUH HIGH-HEAT / 13,000 BTUH LOW-HEAT PER BURNER, DERATED 2%/1000 FT (305M) ABOVE SEA LEVEL)

ALTITUDE RANGE ft (m)		AVG. GAS HEAT VALUE AT ALTITUDE (Btu/cu ft)	SPECIFIC GRAVITY OF NATURAL GAS							
			0.58		0.60		0.62		0.64	
			Orifice No.	Mnfld Press High/Low	Orifice No.	Mnfld Press High/Low	Orifice No.	Mnfld Press High/Low	Orifice No.	Mnfld Press High/Low
U.S.A. and Canada	0 (0) to 2000 (610)	900	43	3.8 / 1.6	42	3.2 / 1.4	42	3.3 / 1.4	42	3.4 / 1.4
		925	43	3.6 / 1.5	43	3.7 / 1.6	43	3.8 / 1.6	42	3.2 / 1.4
		950	43	3.4 / 1.4	43	3.5 / 1.5	43	3.6 / 1.5	43	3.7 / 1.6
		975	**44**	**3.7 / 1.6**	**44**	**3.8 / 1.6**	43	3.4 / 1.5	43	3.6 / 1.5
		1000	**44**	**3.5 / 1.5**	**44**	**3.6 / 1.5**	**44**	**3.8 / 1.6**	43	3.4 / 1.4
		1025	**44**	**3.3 / 1.4**	**44**	**3.5 / 1.5**	**44**	**3.6 / 1.5**	**44**	**3.7 / 1.6**
		1050	**44**	**3.2 / 1.3**	**44**	**3.3 / 1.4**	**44**	**3.4 / 1.4**	**44**	**3.5 / 1.5**
		1075	45	3.7 / 1.6	45	3.8 / 1.6	**44**	**3.3 / 1.4**	**44**	**3.4 / 1.4**
		1100	46	3.7 / 1.6	46	3.8 / 1.6	45	3.8 / 1.6	**44**	**3.2 / 1.4**
U.S.A. and Canada	U.S.A. 2001 (611) to 3000 (914)	800	42	3.4 / 1.4	42	3.5 / 1.5	42	3.6 / 1.5	42	3.7 / 1.6
		825	43	3.8 / 1.6	42	3.3 / 1.4	42	3.4 / 1.4	42	3.5 / 1.5
		850	43	3.6 / 1.5	43	3.7 / 1.6	42	3.2 / 1.3	42	3.3 / 1.4
		875	43	3.4 / 1.4	43	3.5 / 1.5	43	3.7 / 1.5	43	3.8 / 1.6
		900	**44**	**3.7 / 1.6**	**44**	**3.8 / 1.6**	43	3.5 / 1.5	43	3.6 / 1.5
	Canada 2001 (611) to 4500 (1372)	925	**44**	**3.5 / 1.5**	**44**	**3.6 / 1.5**	**44**	**3.8 / 1.6**	43	3.4 / 1.4
		950	**44**	**3.3 / 1.4**	**44**	**3.4 / 1.5**	**44**	**3.6 / 1.5**	**44**	**3.7 / 1.6**
		975	**44**	**3.2 / 1.3**	**44**	**3.3 / 1.4**	**44**	**3.4 / 1.4**	**44**	**3.5 / 1.5**
		1000	46	3.8 / 1.6	45	3.8 / 1.6	**44**	**3.2 / 1.4**	**44**	**3.3 / 1.4**
U.S.A. Only	3001 (915) to 4000 (1219)	775	42	3.3 / 1.4	42	3.4 / 1.4	42	3.5 / 1.5	42	3.6 / 1.5
		800	43	3.8 / 1.6	42	3.2 / 1.4	42	3.3 / 1.4	42	3.4 / 1.4
		825	43	3.6 / 1.5	43	3.7 / 1.6	43	3.8 / 1.6	42	3.2 / 1.4
		850	**44**	**3.8 / 1.6**	43	3.5 / 1.5	43	3.6 / 1.5	43	3.7 / 1.6
		875	**44**	**3.6 / 1.5**	**44**	**3.7 / 1.6**	43	3.4 / 1.4	43	3.5 / 1.5
		900	**44**	**3.4 / 1.4**	**44**	**3.5 / 1.5**	**44**	**3.7 / 1.5**	**44**	**3.8 / 1.6**
		925	**44**	**3.2 / 1.4**	**44**	**3.4 / 1.4**	**44**	**3.5 / 1.5**	**44**	**3.6 / 1.5**
		950	45	3.7 / 1.6	**44**	**3.2 / 1.3**	**44**	**3.3 / 1.4**	**44**	**3.4 / 1.4**
U.S.A. Only	4001 (1220) to 5000 (1524)	750	42	3.3 / 1.4	42	3.4 / 1.4	42	3.5 / 1.5	42	3.6 / 1.5
		775	43	3.7 / 1.6	43	3.8 / 1.6	42	3.3 / 1.4	42	3.4 / 1.4
		800	43	3.5 / 1.5	43	3.6 / 1.5	43	3.7 / 1.6	43	3.8 / 1.6
		825	**44**	**3.8 / 1.6**	43	3.4 / 1.4	43	3.5 / 1.5	43	3.6 / 1.5
		850	**44**	**3.5 / 1.5**	**44**	**3.7 / 1.5**	**44**	**3.8 / 1.6**	43	3.4 / 1.4
		875	**44**	**3.3 / 1.4**	**44**	**3.5 / 1.5**	**44**	**3.6 / 1.5**	**44**	**3.7 / 1.6**
		900	**44**	**3.2 / 1.3**	**44**	**3.3 / 1.4**	**44**	**3.4 / 1.4**	**44**	**3.5 / 1.5**
		925	46	3.8 / 1.6	45	3.7 / 1.6	**44**	**3.2 / 1.4**	**44**	**3.3 / 1.4**
U.S.A. Only	5001 (1525) to 6000 (1829)	725	42	3.2 / 1.4	42	3.3 / 1.4	42	3.4 / 1.5	42	3.5 / 1.5
		750	43	3.7 / 1.5	43	3.8 / 1.6	42	3.2 / 1.4	42	3.3 / 1.4
		775	43	3.4 / 1.4	43	3.5 / 1.5	43	3.7 / 1.5	43	3.8 / 1.6
		800	**44**	**3.7 / 1.6**	**44**	**3.8 / 1.6**	43	3.4 / 1.5	43	3.5 / 1.5
		825	**44**	**3.5 / 1.5**	**44**	**3.6 / 1.5**	**44**	**3.7 / 1.6**	**44**	**3.8 / 1.6**
		850	**44**	**3.3 / 1.4**	**44**	**3.4 / 1.4**	**44**	**3.5 / 1.5**	**44**	**3.6 / 1.5**
		875	45	3.7 / 1.6	**44**	**3.2 / 1.3**	**44**	**3.3 / 1.4**	**44**	**3.4 / 1.4**
		900	46	3.7 / 1.6	46	3.8 / 1.6	45	3.8 / 1.6	**44**	**3.2 / 1.4**
U.S.A. Only	6001 (1830) to 7000 (2133)	675	42	3.4 / 1.4	42	3.5 / 1.5	42	3.6 / 1.5	42	3.8 / 1.6
		700	42	3.2 / 1.3	42	3.3 / 1.4	42	3.4 / 1.4	42	3.5 / 1.5
		725	43	3.6 / 1.5	43	3.7 / 1.6	43	3.8 / 1.6	42	3.3 / 1.4
		750	43	3.4 / 1.4	43	3.5 / 1.5	43	3.6 / 1.5	43	3.7 / 1.6
		775	**44**	**3.6 / 1.5**	**44**	**3.7 / 1.6**	43	3.4 / 1.4	43	3.5 / 1.5
		800	**44**	**3.4 / 1.4**	**44**	**3.5 / 1.5**	**44**	**3.6 / 1.5**	**44**	**3.7 / 1.6**
		825	**44**	**3.2 / 1.3**	**44**	**3.3 / 1.4**	**44**	**3.4 / 1.4**	**44**	**3.5 / 1.5**
		850	46	3.8 / 1.6	45	3.8 / 1.6	**44**	**3.2 / 1.4**	**44**	**3.3 / 1.4**

A11252A

Table 3 (Cont.) Orifice Size and Manifold Pressure (in. w.c.) for Gas Input Rate

TWO-STAGE FURNACE

(TABULATED DATA BASED ON 20,000 BTUH HIGH-HEAT / 13,000 BTUH LOW-HEAT PER BURNER, DERATED 2%/1000 FT (305M) ABOVE SEA LEVEL)

ALTITUDE RANGE ft (m)		AVG. GAS HEAT VALUE AT ALTITUDE (Btu/cu ft)	SPECIFIC GRAVITY OF NATURAL GAS							
			0.58		0.60		0.62		0.64	
			Orifice No.	Mnfld Press High/Low	Orifice No.	Mnfld Press High/Low	Orifice No.	Mnfld Press High/Low	Orifice No.	Mnfld Press High/Low
U.S.A. Only	7001 (2134) to 8000 (2438)	**650**	42	3.4 / 1.4	42	3.5 / 1.5	42	3.6 / 1.5	42	3.7 / 1.6
		675	43	3.8 / 1.6	42	3.2 / 1.4	42	3.3 / 1.4	42	3.4 / 1.5
		700	43	3.5 / 1.5	43	3.7 / 1.5	43	3.8 / 1.6	42	3.2 / 1.4
		725	**44**	**3.8 / 1.6**	43	3.4 / 1.4	43	3.5 / 1.5	43	3.6 / 1.5
		750	**44**	**3.5 / 1.5**	**44**	**3.7 / 1.5**	**44**	**3.8 / 1.6**	43	3.4 / 1.4
		775	**44**	**3.3 / 1.4**	**44**	**3.4 / 1.4**	**44**	**3.5 / 1.5**	**44**	**3.7 / 1.5**
		800	45	3.8 / 1.6	**44**	**3.2 / 1.4**	**44**	**3.3 / 1.4**	**44**	**3.4 / 1.4**
		825	46	3.7 / 1.6	46	3.8 / 1.6	45	3.8 / 1.6	**44**	**3.2 / 1.4**
U.S.A. Only	8001 (2439) to 9000 (2743)	**625**	42	3.4 / 1.4	42	3.5 / 1.5	42	3.6 / 1.5	42	3.7 / 1.6
		650	43	3.8 / 1.6	42	3.2 / 1.4	42	3.3 / 1.4	42	3.4 / 1.4
		675	43	3.5 / 1.5	43	3.6 / 1.5	43	3.7 / 1.6	42	3.2 / 1.3
		700	**44**	**3.7 / 1.6**	43	3.4 / 1.4	43	3.5 / 1.5	43	3.6 / 1.5
		725	**44**	**3.5 / 1.5**	**44**	**3.6 / 1.5**	**44**	**3.7 / 1.6**	**44**	**3.8 / 1.6**
		750	**44**	**3.3 / 1.4**	**44**	**3.4 / 1.4**	**44**	**3.5 / 1.5**	**44**	**3.6 / 1.5**
		775	45	3.7 / 1.6	**44**	**3.2 / 1.3**	**44**	**3.3 / 1.4**	**44**	**3.4 / 1.4**
U.S.A. Only	9001 (2744) to 10000 (3048)	**600**	42	3.3 / 1.4	42	3.4 / 1.5	42	3.6 / 1.5	42	3.7 / 1.6
		625	43	3.7 / 1.6	42	3.2 / 1.3	42	3.3 / 1.4	42	3.4 / 1.4
		650	43	3.5 / 1.5	43	3.6 / 1.5	43	3.7 / 1.6	43	3.8 / 1.6
		675	**44**	**3.7 / 1.6**	**44**	**3.8 / 1.6**	43	3.4 / 1.4	43	3.5 / 1.5
		700	**44**	**3.4 / 1.4**	**44**	**3.5 / 1.5**	**44**	**3.7 / 1.5**	**44**	**3.8 / 1.6**
		725	**44**	**3.2 / 1.3**	**44**	**3.3 / 1.4**	**44**	**3.4 / 1.4**	**44**	**3.5 / 1.5**

* Orifice numbers shown in **BOLD** are factory-installed.

A11252B

Adjust Temperature Rise

NOTE: Blower door must be installed when taking temperature rise reading. Leaving blower door off will result in incorrect temperature measurements, due to possible changes in duct static pressure and airflow.

⚠ CAUTION

FURNACE DAMAGE HAZARD

Failure to follow this caution may result in:

- Overheating the heat exchangers or condensing flue gases in heat exchanger areas not designed for condensate
- Shortened furnace life
- Component damage

Temperature rise must be within limits specified on furnace rating plate. Recommended operation is at midpoint of rise range or slightly above.

Place SW−1 (TT) in ON position. Jumper R to W/W1 and W2 to check high−heat temperature rise. To check low−heat temperature rise, remove jumper to W2. Determine air temperature rise for both high and low−heat. Do not exceed temperature rise ranges specified on unit rating plate for high and low−heat.

This furnace must operate within the temperature rise ranges specified on the furnace rating plate. Determine the air temperature as follows:

1. Place duct thermometers in return and supply ducts as close to furnace as possible. Be sure thermometers do not “see” heat exchangers so that radiant heat does not affect thermometer readings. This is particularly important with straight run ducts.
2. When thermometer readings stabilize, subtract return−air temperature from supply−air temperature to determine temperature rise.

If the temperature rise is outside this range, check the following:

1. Gas input for low and high heat operation.
2. Derate for altitude if applicable.
3. Return and supply ducts for excessive restrictions causing static pressures greater than 0.50−in. w.c. (125 Pa)
4. Adjust temperature rise by adjusting blower speed.
   - Increase blower speed to reduce temperature rise.
   - Decrease blower speed to increase temperature rise.

⚠ WARNING

ELECTRICAL OPERATION HAZARD

Failure to follow this warning could result in personal injury or death.

Disconnect 115vac electrical power before changing speed tap.

Table 4	Blower Speed Taps	
COLOR	SPEED	FACTORY ATTACHED TO:
Gray	5	Cool
Yellow	4	Spare
Blue	3	HI HT
Orange	2	Spare
Red	1	LO HT/Cont Fan

For low−heat, the following connections can be made at LO HT on control:

- Orange blower motor lead
- Red blower motor lead − Factory Setting

(Read following caution before changing taps.)

⚠ CAUTION

UNIT DAMAGE HAZARD

To avoid operating outside the rise range and avoid component damage:

Refer to the Air Delivery Tables to determine which airflows and settings are allowed for proper heating airflow. DO NOT use the highlighted settings for High−Stage Heating airflow. The highlighted settings are to be used for Low−Stage Heating and Cooling ONLY.

Change the blower speed taps as required to maintain proper temperature rise for Heating and Cooling as described above. To change blower motor speed selections for heating mode, remove blower motor lead from control HEAT terminal(s). (See **Figure 4**) Select desired blower motor speed lead(s) from the other motor leads and relocate it/them to LOW or HIGH HEAT terminal(s). Reconnect original lead on SPARE terminal

Adjust Blower Off Delay (Heat Mode)

If desired, the main blower off time delay period may be lengthened or shortened when operating in the heating mode to provide greater comfort. For position and location of switches on control center. (See **Figure 4** and **Figure 15**)

a. Remove blower door if installed.
b. Turn setup switches SW−2 and SW−3 ON or OFF for desired blower off delay. See **Table 5, Figure 4** and **Figure 15.**
c. Proceed to “Set Blower Off Delay” before installing blower door.

Table 5	Blower Speed Taps	
DESIRED HEATING MODE BLOWER OFF DELAY (SEC.)	SETUP SWITCH (SW−2 & SW−3) POSITION	
	SW−2	SW−3
90	OFF	OFF
120	OFF	ON
150	ON	OFF
180	ON	ON

Adjust Cooling Airflow

The cooling airflow can be set from the remaining blower speed taps. Refer to the Air Delivery Tables in these instructions.

If a two−stage air conditioning or heat pump is installed, the Low Cooling Speed is the same speed tap as the Low Heat (LO HT), as well as Continuous Fan.

Adjust Continuous Fan Airflow

The Continuous Fan airflow can be set from the remaining blower speed taps. Refer to the Air Delivery Tables in these instructions.

The Continuous Fan speed can be changed to any other speed tap by toggling th Fan switch at the thermostat. See the Sequence of Operation for details.

⚠ CAUTION

FURNACE OVERHEATING HAZARD

Failure to follow this caution may result in reduced furnace life.

Recheck temperature rise. It must be within limits specified on the rating plate. Recommended operation is at the mid−point of rise range or slightly above.

Adjust Thermostat Heat Anticipator

Mechanical thermostat: Set thermostat heat anticipator to match the amp. draw of the electrical components in the R-W/W1 circuit. Accurate amp. draw readings can be obtained at the wires normally connected to thermostat sub-base terminals, R and W. The thermostat anticipator should NOT be in the circuit while measuring current. (See **Figure 5**)

1. Set SW-1 (TT) switch on furnace control board to ON. (See **Figure 4**)
2. Remove thermostat from sub-base or from wall.
3. Connect an amp. meter across the R and W sub-base terminals or R and W wires at wall.
4. Record amp. draw across terminals when furnace is in low heat and after blower starts.
5. Set heat anticipator on thermostat per thermostat instructions and install on sub-base or wall.
6. Turn SW-1 (TT) switch OFF.
7. Install blower access door.

Electronic thermostat: Set cycle rate for 3 cycles per hr.

Figure 5 Amp. Draw Check with Ammeter

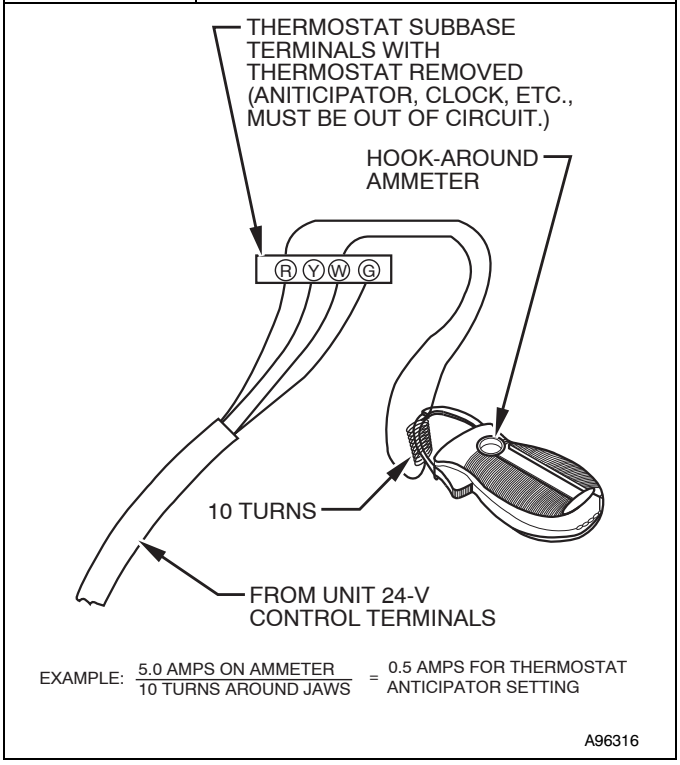

Table 6		AIR DELIVERY - CFM (with filter[1])										
UNIT SIZE	RETURN-AIR CONNECTION	SPEED TAPS[2]	EXTERNAL STATIC PRESSURE (in. w.c.)									
			0.1	0.2	0.3	0.4	0.5	0.6	0.7	0.8	0.9	1.0
0401410	SIDE/BOTTOM	Gray	1120	1080	1030	980	925	875	820	760	690	630
		Yellow	880	845	810	780	740	710	680	640	615	570
		Blue	695	665	620	575	535	495	455	420	370	280
		Orange	640	595	540	495	460	420	370	310	260	230
		Red	570	525	475	425	385	330	255	220	- [6]	- [6]
0401712	SIDE/BOTTOM	Gray	1255	1220	1175	1130	1085	1040	990	940	880	825
		Yellow	940	905	870	840	805	770	735	695	665	630
		Blue	705	670	630	575	540	500	455	410	380	325
		Orange	580	535	480	425	380	335	290	235	- [6]	- [6]
		Red	555	485	425	375	330	280	215	- [6]	- [6]	- [6]
0601412	SIDE/BOTTOM	Gray	1265	1225	1185	1140	1090	1030	975	920	850	760
		Yellow	1115	1085	1060	1030	1000	970	930	880	810	715
		Orange	1000	970	940	910	880	845	815	770	735	695
		Blue	945	915	885	855	820	785	745	705	675	635
		Red	770	740	700	660	620	575	540	500	455	415
0601714	SIDE/BOTTOM	Gray	1720	1670	1620	1565	1505	1440	1375	1295	1220	1135
		Yellow	1325	1285	1255	1220	1185	1145	1115	1075	1040	1000
		Blue	1010	970	925	875	835	785	745	690	660	620
		Orange	1160	1115	1080	1045	1000	960	920	875	840	785
		Red	785	715	655	595	530	490	435	385	340	285
0801716	SIDE/BOTTOM	Gray	1810	1770	1720	1665	1610	1540	1475	1400	1315	1235
		Yellow	1535	1500	1475	1435	1405	1370	1340	1310	1245	1160
		Blue	1380	1340	1305	1270	1240	1200	1165	1130	1090	1050
		Orange	1180	1130	1095	1060	1015	975	935	895	850	800
		Red	1100	1045	1010	970	920	885	845	790	745	690
0802120	BOTTOM or TWO-SIDES [4, 5]	Gray	2290	2225	2155	2090	2015	1930	1845	1750	1640	1515
		Yellow	1810	1760	1725	1685	1640	1600	1555	1520	1480	1415
		Blue	1385	1340	1285	1240	1200	1140	1090	1050	995	950
		Orange	1560	1520	1475	1430	1385	1335	1295	1240	1200	1150
		Red	1055	985	910	860	795	750	680	615	565	495
1002120	BOTTOM or TWO-SIDES [4, 5]	Gray	2340	2295	2250	2195	2110	2030	1935	1835	1725	1605
		Yellow	1950	1900	1855	1800	1755	1705	1655	1605	1560	1485
		Blue	1750	1700	1650	1605	1555	1500	1455	1395	1350	1300
		Orange	1570	1520	1460	1410	1350	1300	1240	1195	1140	1095
		Red	1350	1280	1225	1155	1105	1045	1000	950	895	830
1202422	BOTTOM or TWO-SIDES [4, 5]	Gray	2275	2230	2185	2130	2055	1950	1825	1710	1610	1500
		Yellow	1875	1820	1770	1720	1660	1600	1550	1505	1450	1390
		Blue	2170	2125	2075	2025	1975	1900	1790	1695	1590	1470
		Orange [3]	1475	1420	1350	1280	1215	1165	1105	1050	995	930
		Red [3]	1625	1565	1505	1445	1385	1325	1275	1225	1170	1130

NOTE:

1. A filter is required for each return−air inlet. Airflow performance includes a 3/4 in. (19 mm) washable filter media such as contained in factory−authorized accessory filter rack. See accessory list. To determine airflow performance without this filter, assume an additional 0.1 in. W.C. available external static pressure.
2. ADJUST THE BLOWER SPEED TAPS AS NECESSARY FOR THE PROPER AIR TEMPERATURE RISE FOR EACH INSTALLATION.
3. Shaded areas indicate that this airflow range is BELOW THE RANGE ALLOWED FOR HIGH−STAGE HEATING OPERATION. THESE AIRFLOW RANGES MAY ONLY BE USED FOR LOW−STAGE HEAT OR COOLING.
4. Airflows over 1800 CFM require bottom return, two−side return, or bottom and side return. A minimum filter size of 20” x 25” is required.
5. For upflow applications, air entering from one side into both the side of the furnace and a return air base counts as a side and bottom return.
6. The ”−” entry indicates an unstable operating condition.

Check Safety Controls

The flame sensor, gas valve, and pressure switch were all checked in the Start−up procedure section as part of normal operation.

1. Check Main Limit Switch
   This control shuts off combustion system and energizes air−circulating blower motor, if furnace overheats. By using this method to check the temperature limit control, it can be established that the limit is functioning properly and that the limit will operate if there is a restricted return−air supply or motor failure. If the limit control does not function during this test, the cause must be determined and corrected.
   a. Run furnace for at least 5 minutes.
   b. Gradually block off return air with a piece of cardboard or sheet metal until the limit trips.
   c. Unblock return air to permit normal circulation.
   d. Burners will re−light when furnace cools down.
2. Check Pressure Switch(es)
   This control proves operation of the draft inducer blower.
   a. Turn off 115−V power to furnace.
   b. Disconnect inducer motor lead wires from wire harness.
   c. Turn on 115−V power to furnace.
   d. Set thermostat to “call for heat” and wait 1 minute. When pressure switch is functioning properly, hot surface igniter should **NOT** glow and control diagnostic light flashes a status code 3. If hot surface

igniter glows when inducer motor is disconnected, shut down furnace immediately.

e. Determine reason pressure switch did not function properly and correct condition.
f. Turn off 115−V power to furnace.
g. Reconnect inducer motor wires, replace outer door, and turn on 115−V power.
h. Blower will run for 90 seconds before beginning the call for heat again.
i. Furnace should ignite normally.

Checklist

1. Put away tools and instruments. Clean up debris.
2. Verify that the jumper is removed from the TEST/TWIN terminal. Verify that there is nothing plugged into the PLT connector.

NOTE: Note: If there is a jumper connector plugged into PLT, remove it and discard. (See **Figure 14**)

3. Verify that Heating Operating Mode switch SW−1 is set properly.. (See **Figure 14**)
4. Verify that the Blower/Heat Off−Delay SW−2 and SW−3 switches are set as desired. (See **Figure 14)**
5. Verify that the blower (lower door in upflow position) and control (“Main” or upper door in upflow position) doors are properly installed.
6. Verify that the Status LED glows. If not, check that the power supply is energized and that the blower door is secure. (See **Figure 14**) to interpret diagnostic codes.
7. Cycle test furnace with room thermostat to be sure that it operates properly with the room thermostat. Check all modes including Heat, Cool and Fan.
8. Check operation of accessories per manufacturer’s instructions.
9. Review Home Owner’s Information with owner.
10. Attach entire literature packet to furnace.

SERVICE AND MAINTENANCE PROCEDURES

⚠ WARNING

FIRE, INJURY OR DEATH HAZARD

Failure to follow this warning could result in personal injury, death and/or property damage.

The ability to properly perform maintenance on this equipment requires certain knowledge, mechanical skills, tools, and equipment. If you do not possess these, do not attempt to perform any service and maintenance on this equipment other than those procedures recommended in the Owner’s Manual.

⚠ CAUTION

ENVIRONMENTAL HAZARD

Failure to follow this caution may result in environmental pollution.

Remove and recycle all components or materials (i.e. oil, refrigerant, control board, etc.) before unit final disposal.

⚠ WARNING

ELECTRICAL SHOCK, FIRE OR EXPLOSION HAZARD

Failure to follow this warning could result in personal injury or death, or property damage.

Before installing, modifying, or servicing system, main electrical disconnect switch must be in the OFF position and install a lockout tag. There may be more than one disconnect switch. Lock out and tag switch with a suitable warning label. Verify proper operation after servicing.

⚠ CAUTION

ELECTRICAL OPERATION HAZARD

Failure to follow this caution may result in improper furnace operation or failure of furnace.

Label all wires prior to disconnection when servicing controls. Wiring errors can cause improper and dangerous operation.

General

These instructions are written as if the furnace is installed in an upflow application. An upflow furnace application is where the blower is located below the combustion and controls section of the furnace, and conditioned air is discharged upward. Since this furnace can be installed in any of the 4 positions shown in **Figure 6**, you must revise your orientation to component location accordingly.

Figure 6 | **Multipoise Orientations**

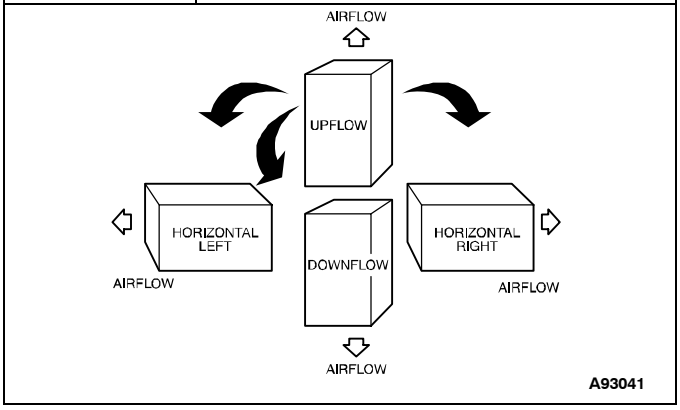

Electrical Controls and Wiring

Pressure Switches

Each pressure switch is labeled with the reference location (noted as “COLLECTOR BOX−LPS” or “HOUSING−HPS” ON THE SWITCH). The nominal break point of each switch is shown on the label below the reference location in inches of water column, “W.C.” The maximum and minimum break point of the switch is +/− 0.05 inches of water column from the nominal break point of the switch. The maximum make point of the switch is 0.10 inches of water above the maximum break point of the switch

Example: Nominal break point on pressure switch is 0.68−in. W.C. The minimum break point of the switch is 0.63−in. W.C. The maximum break point of the switch is 0.73−in. W.C. The maximum make point of the switch is 0.83−in. W.C.

⚠ WARNING

ELECTRICAL SHOCK HAZARD

Failure to follow this warning could result in personal injury or death.

There may be more than one electrical supply to the furnace. Check accessories and cooling unit for additional electrical supplies that must be shut off during furnace servicing. Lock out and tag switch with a suitable warning label.

The electrical ground and polarity for 115–V wiring must be properly maintained. Refer to **Figure 7** for field wiring information and to **Figure 15** for furnace wiring information.

NOTE: If the polarity is not correct, the STATUS LED on the control will flash code 10 and prevent the furnace from heating. The control system also requires an earth ground for proper operation of the control and flame–sensing electrode.

The 24–V circuit contains an automotive–type, 3–amp. fuse located on the control. (See **Figure 4**) Any shorts of the 24–V wiring during installation, service, or maintenance will cause this fuse to blow. If fuse replacement is required, use ONLY a 3–amp. fuse. The control LED display will be off when fuse needs to be replaced.

Troubleshooting

Refer to the service label. (See **Figure 14**—Service Label)

The Troubleshooting Guide – Flow Chart (See **Figure 16**) can be a useful tool in isolating furnace operation problems. Beginning with the word “Start,” answer each question and follow the appropriate arrow to the next item.

The Guide – Flow Chart will help to identify the problem or failed component. After replacing any component, verify correct operation sequence.

Proper instrumentation is required to service electrical controls. The control in this furnace is equipped with a Status Code LED (Light–Emitting Diode) to aid in installation, servicing, and troubleshooting. Status codes can be viewed at the indicator in blower door. The green furnace control LED is either be a heartbeat, off, or a code composed of 1 or 2 digits. The first digit is the number of short flashes, the second digit is the number of long flashes.

Figure 7 **Heating and Cooling Application Wiring Diagram with Single–Stage Thermostat**

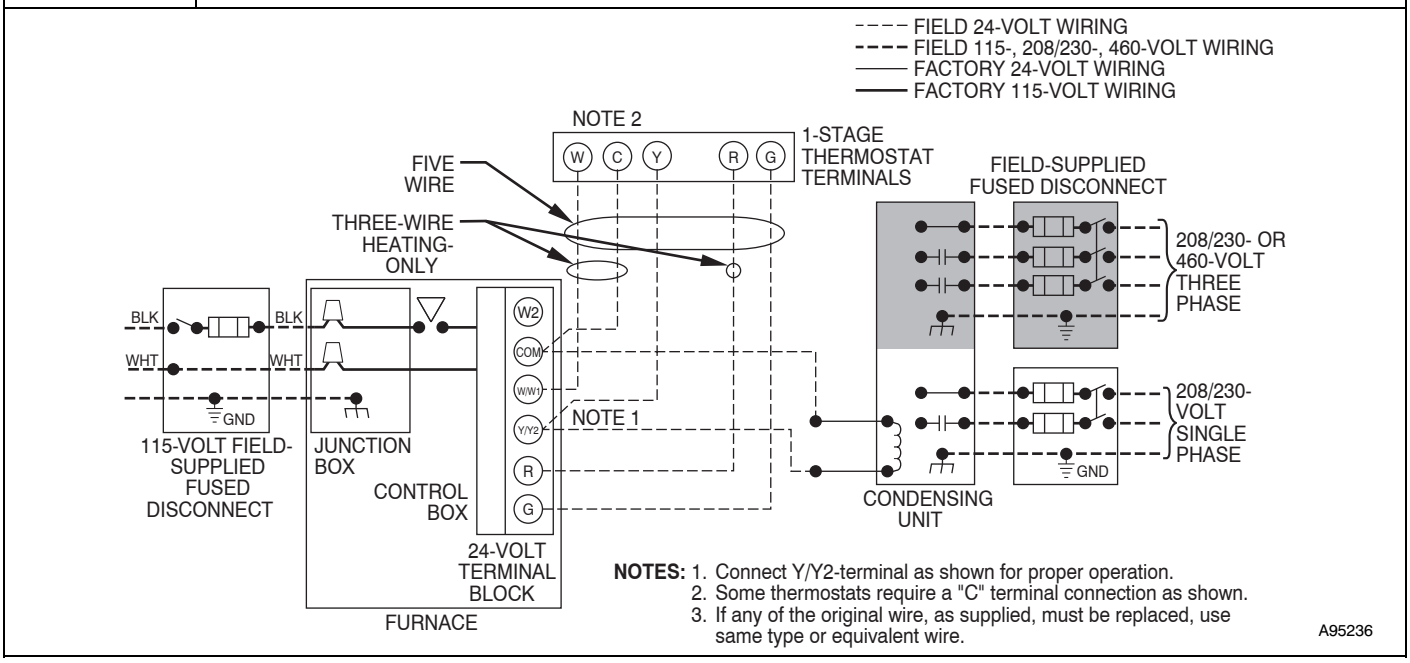

For an explanation of status codes, refer to service label located on control door or **Figure 14**, and the troubleshooting guide which can be obtained from your distributor.

Retrieving Stored Fault Codes

NOTE: Fault codes cannot be retrieved if a thermostat signal (24-V on W, Y, G, etc.) is present, or if any delays such as blower off-delays are active.

The stored status codes will NOT be erased from the control memory when 115- or 24-V power is interrupted. See the Service Label (See **Figure 14**) for more information. The most recent fault code may be retrieved as follows:

1. Leave 115-V power connected to furnace.
2. Observe the status LED through the blower door (the lower door on upflow applications) indicator. Refer to the Service Label (See **Figure 14**) to interpret the LED.
3. Remove the Main/Control door (the upper door on upflow installations).
4. BRIEFLY (2–3 seconds) disconnect and reconnect ONE of the main limit wires.
5. The LED will flash the last stored fault code. Refer to the Service Label (See **Figure 14**) to interpret the LED.
6. A component test sequence will follow.
7. Reinstall the Main/Control door.

Component Self–Test

NOTE: The furnace control component test allows all components to run for a short time; except the gas valve and humidifier terminal HUM 24 VAC are not energized. The EAC-1 terminal is energized when the blower is energized. The HUM terminal is energized when the inducer is energized. This feature helps diagnose a system problem in case of a component failure. The component test feature will not operate if any thermostat signal is present at the control and not until all time delays are completed.

To begin Component Self–Test:

1. Remove blower access door.
2. Disconnect the thermostat R lead from furnace control.
3. Manually close blower door switch.

Caution must be taken when manually closing this switch for service purposes.

⚠ WARNING

ELECTRICAL SHOCK HAZARD

Failure to follow this warning could result in personal injury, or death.

Blower access door switch opens 115–V power to control. No component operation can occur unless switch is closed. Caution must be taken when manually closing this switch for service purposes.

4. For approximately 2 sec, short (jumper) the C terminal on control to the TEST/TWIN 3/16—in. (5 mm) quick-connect terminal on control until the LED goes off. Remove jumper from terminals. (See **Figure 4**)

NOTE: If TEST/TWIN and C terminals are jumpered longer than 2 sec., LED will flash code 10 and ignore component test request.

Component test sequence is as follows:

a. LED will display previous status code 4 times.
b. Inducer motor starts and continues to run until Step g of component test sequence.
c. After 7 seconds the hot surface igniter is energized for 15 sec., then off.
d. Blower motor operates on LO–HT speed for 10 sec.
e. Blower motor operates on HI–HT speed for 10 sec.
f. Blower motor operates on COOL speed for 10 sec.
g. Inducer motor goes to low speed for 10 sec., then stops.

5. Reconnect R lead to furnace control, remove tape from blower door switch, and re-install blower door.
6. Verify furnace shut down by lowering thermostat setting below room temperature.
7. Verify that furnace restarts by raising thermostat setting above room temperature.
8. Release blower door switch, reattach wire to “R” terminal on furnace control board and replace blower door.

Care and Maintenance

⚠ WARNING

FIRE OR EXPLOSION HAZARD

Failure to follow this warning could result in personal injury, death and/or property damage.

Never store flammable or combustible materials on, near, or in contact with the furnace, such as:

1. Spray or aerosol cans, rags, brooms, dust mops, vacuum cleaners, or other cleaning tools.
2. Soap powders, bleaches, waxes or other cleaning compounds, plastic or plastic containers, gasoline, kerosene, cigarette lighter fluid, dry cleaning fluids, or other volatile fluids.
3. Paint thinners and other painting compounds, paper bags, or other paper products. Exposure to these materials could lead to corrosion of the heat exchangers.

For continuing high performance and to minimize possible furnace failure, periodic maintenance must be performed on this furnace. Consult your local dealer about proper frequency of maintenance and the availability of a maintenance contract.

⚠ WARNING

ELECTRICAL SHOCK AND FIRE HAZARD

Failure to follow this warning could result in personal injury, death, and/or property damage.

Turn off the gas and electrical supplies to the furnace and install lockout tag before performing any maintenance or service. Follow the operating instructions on the label attached to the furnace.

⚠ WARNING

CARBON MONOXIDE POISONING AND FIRE HAZARD

Failure to follow this warning could result in personal injury, death and/or property damage.

Never operate furnace without a filter or filtration device installed. Never operate a furnace with filter or filtration device access doors removed.

⚠ CAUTION

CUT HAZARD

Failure to follow this caution may result in personal injury.

Sheet metal parts may have sharp edges or burrs. Use care and wear appropriate protective clothing, safety glasses and gloves when handling parts, and servicing furnaces.

The minimum maintenance on this furnace is as follows:

1. Check and clean air filter each month or more frequently if required. Replace if torn.
2. Check blower motor and wheel for cleanliness each heating and cooling season. Clean as necessary.
3. Check electrical connections for tightness and controls for proper operation each heating season. Service as necessary.
4. Inspect burner compartment before each heating season for rust, corrosion, soot or excessive dust. If necessary, have furnace and burner serviced by a qualified service agency.
5. Inspect the vent pipe/vent system before each heating season for water leakage, sagging pipes or broken fittings. Have vent pipes/vent system serviced by a qualified service agency.
6. Inspect any accessories attached to the furnace such as a humidifier or electronic air cleaner. Perform any service or maintenance to the accessories as recommended in the accessory instructions.

Cleaning and/or Replacing Air Filter

The air filter type may vary depending on the application or orientation. The filter is external to the furnace casing. There are no provisions for an internal filter with this furnace. See “Filter Arrangement” under the “Installation” section of this manual.

NOTE: If the filter has an airflow direction arrow, the arrow must point toward the blower.

To clean or replace filters, proceed as follows:

⚠ WARNING

ELECTRICAL SHOCK, FIRE OR EXPLOSION HAZARD

Failure to follow this warning could result in personal injury or death, or property damage.

Before installing, modifying, or servicing system, main electrical disconnect switch must be in the OFF position and install a lockout tag. There may be more than one disconnect switch. Lock out and tag switch with a suitable warning label. Verify proper operation after servicing.

1. Turn off electrical supply to furnace.
2. Remove filter cabinet door.
3. Slide filter out of cabinet.
4. If equipped with permanent, washable filter, clean filter by spraying cold tap water through filter in opposite direction of airflow. Rinse filter and let dry. Oiling or coating of the filter is not recommended.
5. If equipped with factory specified disposable media filter, replace only with a factory specified media filter of the same size.
6. Slide filter into cabinet.
7. Replace filter cabinet door.
8. Turn on electrical supply to furnace.

Blower Motor and Wheel Maintenance

To ensure long life, economy, and high efficiency, clean accumulated dirt and grease from blower wheel and motor annually.

The inducer and blower motors are pre−lubricated and require no additional lubrication. These motors can be identified by the absence of oil ports on each end of the motor.

The following items should be performed by a qualified service technician. Clean blower motor and wheel as follows:

1. Turn off electrical supply to furnace.
2. Remove blower door.
3. All factory wires can be left connected, but field thermostat and accessory wiring may need to be disconnected depending on their length and routing.
4. If the vent and combustion air pipe passes through the blower compartment, it will be necessary to remove the pipes from the blower compartment.

Disconnect the vent and combustion air pipe by:

a. Loosen the clamps on the vent couplings and combustion air pipe external to the furnace.
b. Separate the pipes from the couplings and move them aside.
c. Loosen the clamps on the vent couplings and combustion air pipe located on the blower shelf.
d. Separate the pipes from the blower compartment and set aside.
e. Remove the couplings from the pipe adapters and set aside.
f. After servicing the blower, reverse steps a through e.
g. Tighten all clamps 15 lb−in.

See **Figure 8** for steps 5 through 14.

5. Remove screws securing blower assembly to blower shelf and slide blower assembly out of furnace. Detach ground wire and disconnect blower motor harness plugs from blower motor.

NOTE: Blower wheel is fragile. Use care.

6. Clean blower wheel and motor by using a vacuum with soft brush attachment. Be careful not to disturb balance weights (clips) on blower wheel vanes. Do not bend wheel or blades as balance will be affected.
7. If greasy residue is present on blower wheel, remove wheel from the blower housing and wash it with an appropriate degreaser. To remove wheel:
   a. Mark blower wheel location on shaft before disassembly to ensure proper reassembly.
   b. Loosen setscrew holding blower wheel on motor shaft.

NOTE: Mark blower mounting arms and blower housing so each arm is positioned at the same hole location during reassembly.

   c. Mark blower wheel orientation and cutoff plate location to ensure proper reassembly.
   d. Remove screws securing cutoff plate and remove cutoff plate from housing.
   e. Remove bolts holding motor mounts to blower housing and slide motor and mounts out of housing.
   f. Remove blower wheel from housing.
   g. Clean wheel per instructions on degreaser cleaner. Do not get degreaser in motor.
8. Reassemble motor and blower wheel by reversing items 7b through 7f. Ensure wheel is positioned for proper rotation.
9. Torque motor mounting bolts to 40 +/− 10 lb−in. when reassembling.
10. Torque blower wheel set screw to 160 +/− 20 lb−in. when reassembling.
11. Verify that blower wheel is centered in blower housing and set screw contacts the flat portion of the motor shaft. Loosen set screw on blower wheel and reposition if necessary.
12. Spin the blower wheel by hand to verify that the wheel does not rub on the housing.
13. Reinstall blower assembly in furnace.
14. Reinstall 2 screws securing blower assembly to blower deck.
15. Reconnect blower leads to furnace control. Refer to furnace wiring diagram, and connect thermostat leads if previously disconnected.

NOTE: Be sure to attach ground wire and reconnect blower harness plugs to blower motor.

Figure 8 Blower Assembly

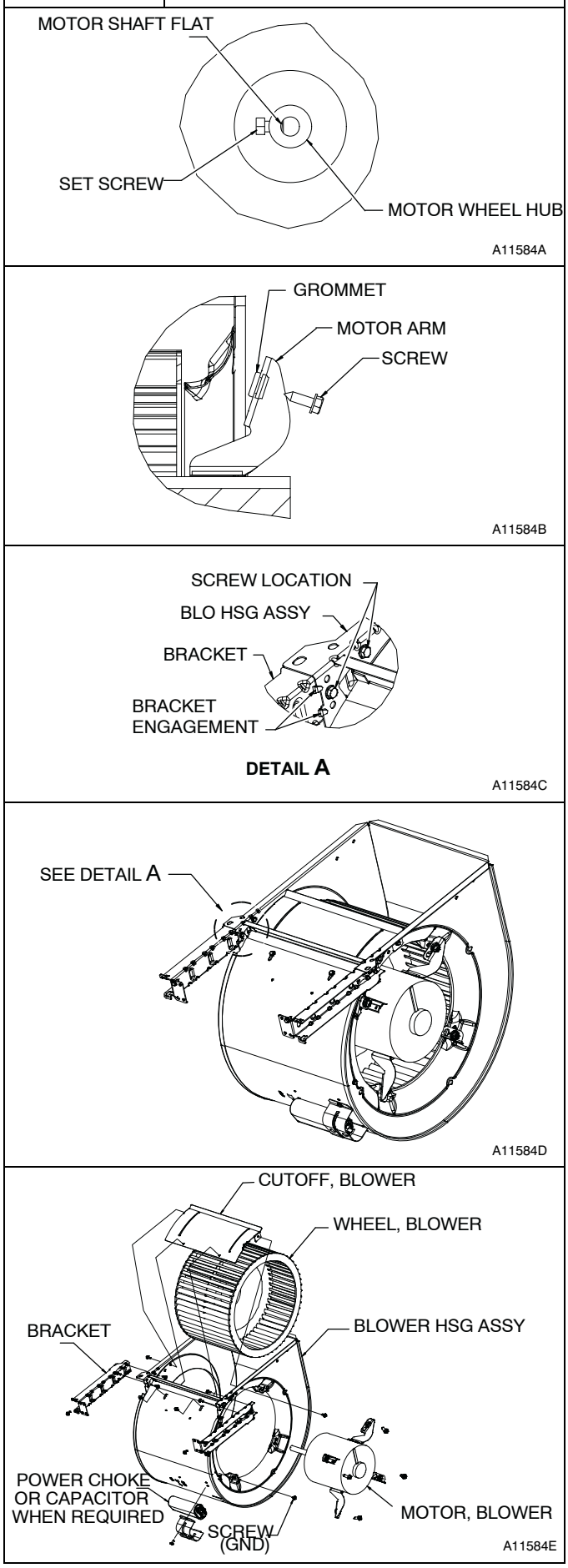

⚠ WARNING

ELECTRICAL OPERATION HAZARD

Failure to follow this warning could result in personal injury or death.

Blower door switch opens 115–V power to control. No component operation can occur unless switch is closed. Caution must be taken when manually closing this switch for service purposes.

16. Downflow or horizontal furnaces with vent pipe through furnace only:
    a. Install and connect short piece of vent pipe inside furnace to existing vent.
    b. Connect vent connector to vent elbow.
17. Turn on electrical supply. Manually close blower door switch. Use a piece of tape to hold switch closed. Check for proper rotation and speed changes between heating and cooling by jumpering R to G and R to Y/Y2 on furnace control thermostat terminals. If outdoor temperature is below 70°F (21°C), turn off circuit breaker to outdoor unit before running furnace in the cooling cycle. Turn outdoor circuit breaker on after completing cooling cycle. (See **Figure 4**)

NOTE: If R–W/W1 thermostat terminals are jumpered at the time blower door switch is closed, blower will run for 90 sec before beginning a heating cycle.

    a. Perform component self–test as shown at the bottom of the SERVICE label, located on the control door.
    b. Verify blower is rotating in the correct direction
18. If furnace is operating properly, RELEASE BLOWER DOOR SWITCH. Remove any jumpers or reconnect any disconnected thermostat leads. Replace blower door.
19. Turn on gas supply and cycle furnace through one complete heating cycle. Verify the furnace temperature rise as shown in Adjustments Section. Adjust temperature rise as shown in Adjustments Section.

Cleaning Burners and Flame Sensor

The following items must be performed by a qualified service technician. If the burners develop an accumulation of light dirt or dust, they may be cleaned by using the following procedure:

NOTE: Use a back-up wrench on the gas valve to prevent the valve from rotating on the manifold or damaging the mounting to the burner assembly.

⚠ WARNING

ELECTRICAL SHOCK AND FIRE HAZARD

Failure to follow this warning could result in personal injury, death, and/or property damage.

Turn off the gas and electrical supplies to the furnace and install lockout tag before performing any maintenance or service. Follow the operating instructions on the label attached to the furnace.

Refer to **Figure 9**.

1. Disconnect power at external disconnect, fuse or circuit breaker.
2. Turn off gas at external shut-off or gas meter.
3. Remove control door and set aside.
4. Turn electric switch on gas valve to OFF.
5. Disconnect the gas pipe from gas valve and remove pipe from the furnace casing.

6. Remove individual wires from terminals on gas valve.
7. Disconnect Hot Surface Igniter (HSI) wires from HSI.
8. Disconnect Flame Sensor wire from Flame Sensor.
9. Support the manifold and remove the four screws that secure the manifold assembly to the burner assembly and set aside. Note the location of the green/yellow wire and ground terminal.
10. Inspect the orifices in the manifold assembly for blockages or obstructions. Remove orifice and clean or replace orifice.
11. Remove the four screws that attach the top plate of the casing to the furnace.
12. Raise top plate up slightly and prop it up with a small piece of wood or folded cardboard.
13. Support the burner assembly and remove the screws that attach the burner assembly to the heat exchanger cell panel.
14. Remove wires from both rollout switches.
15. Slide one–piece burner out of slots on sides of burner assembly.
16. Remove the flame sensor from the burner assembly.
17. (Optional) Remove the Hot Surface Igniter (HSI) and bracket from the burner assembly.
18. Check igniter resistance. Nominal resistance is 40 to 70 ohms at room temperature and is stable over the life of the igniter.
19. Clean burner with a brush and a vacuum.
20. Clean the flame sensor with fine steel wool (0000 grade). Do not use sand paper or emery cloth.

Figure 9 Burner Assembly

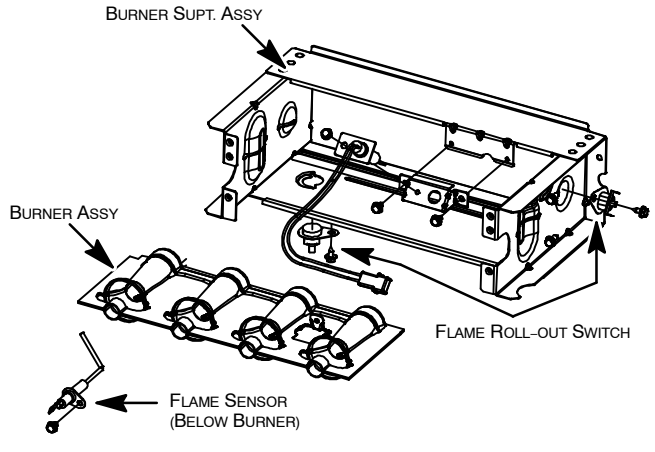

Representative drawing only, some models may vary in appearance.

To reinstall burner assembly:

1. Install the Hot Surface Igniter (HSI) and bracket in burner assembly.
2. Install flame sensor on burner.
3. Align the edges of the one-piece burner with the slots in the burner assembly and slide the burners forward until they are fully seated in the burner assembly.
4. Align the orifices in the manifold assembly with the support rings on the end of the burner.
5. Insert the orifices in the support rings of the burners.

NOTE: If manifold does not fit flush against the burner, do not force the manifold on the burner assembly. The burners are not fully seated forward in the burner assembly. Remove the manifold and check burner positioning in the burner assembly assembly before re-installing the manifold.

6. Attach the green/yellow wire and ground terminal to one of the manifold mounting screws.
7. Install the remaining manifold mounting screws.
8. Check the igniter alignment. See **Figure 9**, **Figure 10** and **Figure 11**.

Figure 10 Igniter Position – Top View

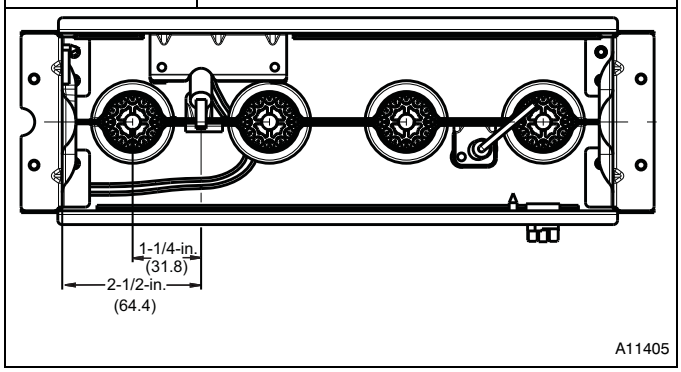

Figure 11 Igniter Position – Side View

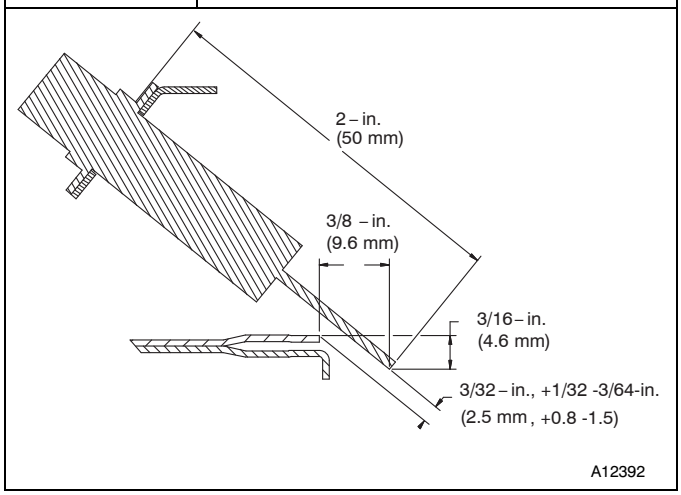

9. Attach the wires to the roll-out switches.
10. Align the burner assembly with the openings in the primary cell inlet panel and attach the burner assembly to the cell panel.
11. Connect the wire for the flame sensor.
12. Connect the wire for the Hot Surface Igniter.

NOTE: Use propane-resistant pipe dope to prevent leaks. Do not use Teflon tape.

13. Install the gas pipe to the gas valve.

⚠ WARNING

FIRE OR EXPLOSION HAZARD

Failure to follow this warning could result in personal injury, death, and/or property damage.

Never purge a gas line into a combustion chamber. Never test for gas leaks with an open flame. Use a commercially available soap solution made specifically for the detection of leaks to check all connections. A fire or explosion may result causing property damage, personal injury or loss of life.

14. Check for gas leaks with a commercially available soap solution made specifically for the detection of leaks.
15. Turn gas on at electric switch on gas valve and at external shut-off or meter

16. Turn power on at external disconnect, fuse or circuit breaker.
17. Run the furnace through two complete heating cycles to check for proper operation
18. Install control door when complete.

Servicing Hot Surface Igniter

The igniter does **NOT** require annual inspection. Check igniter resistance before removal. Refer to **Figure 9**, **Figure 10** and **Figure 11**.

1. Turn off gas and electrical supplies to furnace.
2. Remove control door.
3. Disconnect igniter wire connection.
4. Check igniter resistance. Igniter resistance is affected by temperature. Only check resistance when the igniter is at room temperature.
   a. Using an ohm meter, check resistance across both igniter leads in connector.
   b. Cold reading should be between 40 ohms and 70 ohms.
5. Remove igniter assembly.
   a. Using a 1/4–in. driver, remove the two screws securing the igniter mounting bracket to the burner assembly (See **Figure 9**)
   b. Carefully withdraw the igniter and bracket assembly through the front of the burner assembly without striking the igniter on surrounding parts.
   c. Inspect igniter for signs of damage or failure.
   d. If replacement is required, remove the screw that secures the igniter on igniter bracket and remove the igniter.
6. To replace igniter and bracket assembly, reverse items 5a through 5d.
7. Reconnect igniter harness to the igniter, dressing the igniter wires to ensure there is no tension on the igniter itself. (See **Figure 9**)
8. Turn on gas and electrical supplies to furnace.
9. Verify igniter operation by initiating control board self–test feature or by cycling thermostat.
10. Replace control door.

Flushing Collector Box and Drainage System

⚠ WARNING

ELECTRICAL SHOCK AND FIRE HAZARD

Failure to follow this warning could result in personal injury, death, and/or property damage.

Turn off the gas and electrical supplies to the furnace and install lockout tag before performing any maintenance or service. Follow the operating instructions on the label attached to the furnace.

1. Turn off gas and electrical supplies to furnace.
2. Remove control door.
3. Disconnect pressure switch tube from pressure switch port.

NOTE: Ensure the pressure switch tube disconnected from the pressure switch is higher than the collector box opening or water will flow out of tube.

4. Remove the collector box plug from the top port on the upper corner of the collector box. (See **Figure 1**)
5. Attach a funnel with a flexible tube to port on the collector box.
6. Flush inside of collector box with water until discharge water from condensate trap is clean and runs freely.
7. Repeat steps 4 thru 6 with middle plug on upper corner of collector box.
8. Remove the pressure switch tube from the collector box.

NOTE: Do **NOT** blow into tube with tube connected to the pressure switch.

9. Clean pressure switch port on collect box with a small wire. Shake any water out of pressure switch tube.
10. Reconnect tube to pressure switch and pressure switch port.
11. Remove the relief tube from the port on the collector box and the trap.
12. Clean the relief port on collect box and the trap with a small wire. Shake any water out of the tube.
13. Reconnect relief tube to trap and collector box ports.

Cleaning Condensate Drain and Trap

NOTE: If the condensate trap is removed, a new gasket between the trap and collector box is required. Verify a condensate trap gasket is included in the service kit or obtain one from your local distributor.

1. Disconnect power at external disconnect, fuse or circuit breaker.
2. Turn off gas at external shut-off or gas meter.
3. Remove control door and set aside.
4. Turn electric switch on gas valve to OFF.
5. Disconnect external drain from condensate drain elbow or drain extension pipe inside the furnace and set aside.
6. Disconnect the condensate trap relief hose from collector box port and condensate trap.

NOTE: If condensate has a heat pad attached to the trap, trace the wires for the pad back to the connection point and disconnect the wires for the heat pad.

7. Remove the screw that secures the condensate trap to the collector box, remove the trap and set aside.
8. Remove the trap gasket from the collector box if it did not come off when the trap was removed.
9. Discard the old trap gasket.
10. Rinse condensate trap in warm water until trap is clean.
11. Flush condensate drain lines with warm water. Remember to check and clean the relief port on the collector box.
12. Shake trap dry.
13. Clean port on collector box with a small wire.

To re-install Condensate Drain and Trap:

1. Remove adhesive backing from condensate trap gasket
2. Install gasket on collector box
3. Align the condensate trap with the drain opening on the collector box and secure the trap with the screw
4. Attach the relief hose to the relief port on the condensate trap and collector box.
5. Secure tubing to prevent any sags or traps in the tubing.
6. Connect condensate drain elbow or drain extension elbow to the condensate trap
7. Connect the leads of the condensate heat pad (if used)
8. Connect external drain piping to the condensate drain elbow or drain extension pipe.
9. Turn gas on at electric switch on gas valve and at external shut-off or meter
10. Turn power on at external disconnect, fuse or circuit breaker.

11. Run the furnace through two complete heating cycles to check for proper operation
12. Install control door when complete.

Checking Heat Pad Operation (If Applicable)

In applications where the ambient temperature around the furnace is 32°F (0°C) or lower, freeze protection measures are required. If this application is where heat tape has been applied, check to ensure it will operate when low temperatures are present.

NOTE: The Heat Pad, when used, should be wrapped around the condensate drain trap. There is no need to use heat tape within the furnace casing. Most heat tapes are temperature activated, and it is not practical to verify the actual heating of the tape. Check the following:

1. Check for signs of physical damage to heat tape such as nicks, cuts, abrasions, gnawing by animals, etc.
2. Check for discolored heat tape insulation. If any damage or discolored insulation is evident, replace heat tape.
3. Check that heat tape power supply circuit is on.

Cleaning Heat Exchangers

The following items must be performed by a qualified service technician.

Primary Heat Exchangers

If the heat exchangers get an accumulation of light dirt or dust on the inside, they may be cleaned by the following procedure:

NOTE: If the heat exchangers get a heavy accumulation of soot and carbon, both the primary and secondary heat exchangers should be replaced rather than trying to clean them thoroughly due to their intricate design. A build–up of soot and carbon indicates that a problem exists which needs to be corrected, such as improper adjustment of manifold pressure, insufficient or poor quality combustion air, improper vent termination, incorrect size or damaged manifold orifice(s), improper gas, or a restricted heat exchanger (primary or secondary). Action must be taken to correct the problem.

1. Turn off gas and electrical supplies to furnace.
2. Remove control door.
3. Disconnect wires or connectors to flame rollout switch, gas valve, igniter, and flame sensor.
4. Using backup wrench, disconnect gas supply pipe from furnace gas control valve.
5. Remove two screws attaching top filler plate and rotate upwards to gain access to screws attaching burner assembly to cell panel.
6. Remove screws attaching burner assembly to cell panel. (See **Figure 9**)

NOTE: Burner cover, manifold, gas valve, and burner assembly should be removed as one assembly.

7. Clean heat exchanger openings with a vacuum and a soft brush. (See **Figure 12**)

Figure 12 Cleaning Heat Exchanger Cell

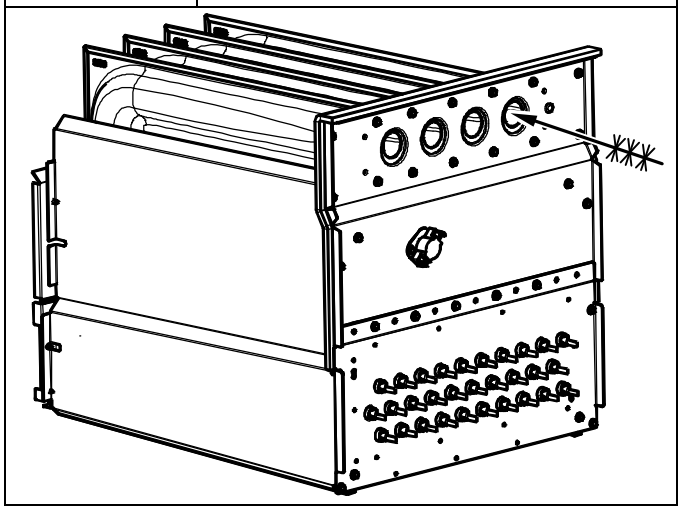

NOTE: After cleaning, inspect the heat exchangers to ensure they are free of all foreign objects that may restrict flow of combustion products.

8. Reverse items 6 through 1 for reassembly.
9. Refer to furnace wiring diagram and reconnect wires to flame rollout switch, gas valve, igniter, and flame sensor.
10. Turn on gas and electrical supplies to furnace.
11. Check furnace operation through two complete heat operating cycles. Look at burners. Burner flames should be clear blue, almost transparent. (See **Figure 13**)

Figure 13 Burner Flame

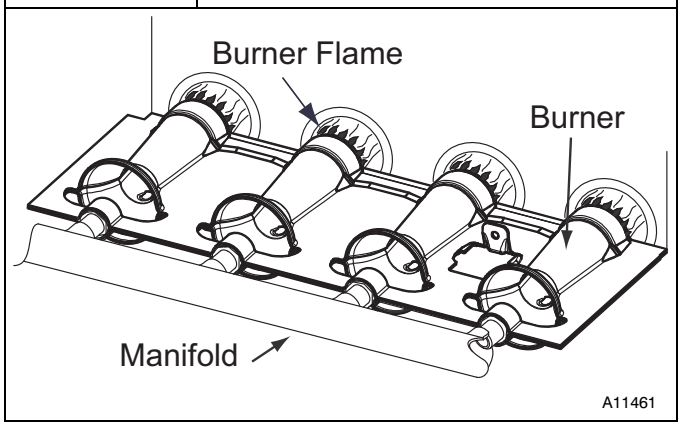

⚠ WARNING

FIRE OR EXPLOSION HAZARD

Failure to follow this warning could result in personal injury, death, and/or property damage.

Never purge a gas line into a combustion chamber. Never test for gas leaks with an open flame. Use a commercially available soap solution made specifically for the detection of leaks to check all connections. A fire or explosion may result causing property damage, personal injury or loss of life.

12. Check for gas leaks.
13. Replace main furnace door.

Secondary Heat Exchangers

The condensing side (inside) of the secondary heat exchanger CANNOT be serviced or inspected without complete removal of the heat exchanger assembly. Detailed information on heat exchanger removal can be obtained from your Distributor.

Winterization

⚠ CAUTION

UNIT AND PROPERTY DAMAGE HAZARD

Failure to follow this caution may result in unit component or property damage.

If the furnace is installed in an unconditioned space where the ambient temperatures may be 32° F (0° C) or lower, freeze protection measures must be taken to prevent property or product damage.

Since the furnace uses a condensing heat exchanger, some water will accumulate in the unit as a result of the heat transfer process. Therefore, once it has been operated, it cannot be turned off and left off for an extended period of time when temperatures will reach 32°F (0°C) or lower unless winterized. Follow these procedures to winterize your furnace:

⚠ CAUTION

UNIT COMPONENT DAMAGE HAZARD

Failure to follow this caution may result in damage to the furnace and other property damage.

Do not use ethylene glycol (automotive antifreeze coolant or equivalent). Failure of plastic components may occur.

1. Obtain propylene glycol (RV/swimming pool antifreeze or equivalent).
2. Turn off gas and electrical supplies to your furnace.
3. Remove furnace control door.
4. Remove the top unused rubber plug from the port on the collector box opposite the condensate trap. (See **Figure 1**)
5. Connect a field supplied 3/8–in. (9.5–mm) ID tube to the open port on the collector box
6. Insert a field supplied funnel into the tube.
7. Pour 1 quart of anti–freeze solution into the funnel/tube. Antifreeze should run through the collector box, overfill condensate trap and flow to an open drain.
8. Replace the rubber plug in the port on the collector box.
9. Remove the middle unused rubber plug from the port on the collector box opposite the condensate trap. (See **Figure 1**)
10. Repeat Steps 5 through 8.
11. If a condensate pump is used, check with pump manufacturer to verify pump is safe for use with antifreeze used. Allow pump to start and pump anti–freeze to open drain.
12. Replace main door.
13. When furnace is re–started, flush condensate pump with clear water to check for proper operation before re–starting furnace.
14. Propylene glycol need not be removed before re–starting furnace.

Figure 14 **Service Label**

SERVICE

To perform status code recall/component test, the control must be in idle mode (no calls for heat, cool, or fan with the blower off) displaying a "Heartbeat". Status code recall/component test can be performed in one of two ways.:

1. Briefly (2-3 seconds) connect the TEST/TWIN terminal to the "C" thermostat terminal with a jumper wire.
   (**NOTE:** If connected for more than 4-5 seconds status code 10 will flash but it will not overwrite the previous status code).

OR

2. Briefly remove then reconnect one limit wire (main or rollout switch).
   (**NOTE:** If limit wire is disconnected for more than 4-5 seconds status code 4 will flash and the previous status code will be lost).
   After the status code is flashed 4 times the component test will begin (see "Component Test Sequence" below). If no previous status code is available the control will not flash a status code and will immediately start the component test. Stored status codes are erased automatically after 72 hours.

EACH OF THE FOLLOWING STATUS CODES IS A SINGLE OR TWO DIGIT NUMBER WITH THE FIRST NUMBER DETERMINED BY THE NUMBER OF SHORT FLASHES AND THE SECOND NUMBER AFTER THE PLUS (+) SIGN IS THE NUMBER OF LONG FLASHES.

LED STATUS CODES

HEARTBEAT (bright-dim) - Control has 24VAC power

2 **PRESSURE SWITCH DID NOT OPEN** Check for: - Obstructed pressure tubing.
- Pressure switch stuck closed.

3 **PRESSURE SWITCH DID NOT CLOSE OR REOPENED** - If LPS open longer than five minutes, inducer shuts off for 15 minutes before retry. If HPS remains open for one minute after gas valve closes (after three succesive trials), then furnace control will lockout for 3 hours before retry. Check for: - Excessive wind - Proper vent sizing
- Defective inducer motor - Low inducer voltage (115VAC) - Defective pressure switch
- Inadequate combustion air supply - Disconnected or obstructed pressure tubing
- Low inlet gas pressure (if LGPS used) - Restricted vent
- Condensate drainage restricted or blocked

If it opens during blower on-delay period, blower will come on for the selected blower off-delay.

4 **LIMIT CIRCUIT FAULT -** Indicates a limit or flame rollout is open.
Blower will run for 4 minutes or until open switch remakes whichever is longer. If open longer than 3 minutes, code changes to lockout #7. If open less than 3 minutes status code #4 continues to flash until blower shuts off. Flame rollout switch requires manual reset.
Check for: - Restricted vent - Proper vent sizing
- Loose blower wheel - Excessive wind - Dirty filter or restricted duct system
- Defective blower motor - Defective switch or connections
- Inadequate combustion air supply (Flame Roll-out Switch open)

5 **ABNORMAL FLAME-PROVING SIGNAL** - Flame is proved while gas valve is de-energized. Inducer will run until fault is cleared. Check for: - Leaky gas valve - Stuck-open gas valve

6 **IGNITION PROVING FAILURE** - Control will try three more times before lockout #6+1 occurs. If flame signal lost during blower on-delay period, blower will come on for the selected blower off-delay.
Check for: - Flame sensor must not be grounded - Low inlet gas pressure
- Oxide buildup on flame sensor (clean with fine steel wool). - Manual valve shut-off
- Proper flame sense microamps (.5 microamps D.C. min., 4.0 - 6.0 nominal).
- Gas valve defective or gas valve turned off - Defective Hot Surface Ignitor
- Control ground continuity - Inadequate flame carryover or rough ignition
- Green/Yellow wire **MUST** be connected to furnace sheet metal.

7 **LIMIT CIRCUIT LOCKOUT** - Lockout occurs if the limit or flame rollout is open longer than 3 minutes. - Control will auto reset after three hours. - Refer to #4.

8 **GAS HEATING LOCKOUT** - Control will NOT auto reset. Check for:
- Mis-wired gas valve - Defective control (valve relay)

9 **HIGH-HEAT PRESSURE SWITCH OR RELAY DID NOT CLOSE OR REOPENED**
- Control relay may be defective, refer to status code #3

10 **POLARITY** - Line voltage (115VAC) polarity reversed.
- If twinned, refer to twinning kit instructions.

1+2 **BLOWER ON AFTER POWER UP** (115 VAC or 24 VAC)
- Blower runs for 90 seconds, if unit is powered up during a call for heat (R-W closed) or (R-W) opens during blower on-delay.

6+1 **IGNITION LOCKOUT** - Control will auto-reset after three hours. Refer to #6.

OFF **SECONDARY VOLTAGE FUSE IS OPEN** Check for: - Door switch not closed
-115VAC at L1 and Neutral, 24VAC at 24VAC RED and COM BLUE, 24V Fuse 3A
- Short circuit in secondary voltage (24VAC) wiring.

ON SOLID **CONTROL CIRCUITRY LOCKOUT** Auto-reset after one hour lockout due to;
- Gas valve relay stuck open - Flame sense circuit failure - Software check error
Reset power to clear lockout. Replace control if status code repeats.

COMPONENT TEST

Gas valve and humidifier will not be turned on. Components will be tested in sequence as follows:

Inducer motor will start in HIGH speed and remain on HIGH until the end of the blower test, then shift to LOW speed for 7 to 15 seconds, the following components are ON for 10 - 15 seconds each individually; hot surface igniter, LO HEAT, HI HEAT, COOL.

338313–2 Rev. H

Figure 15 **Wiring Diagram**

CONNECTION DIAGRAM

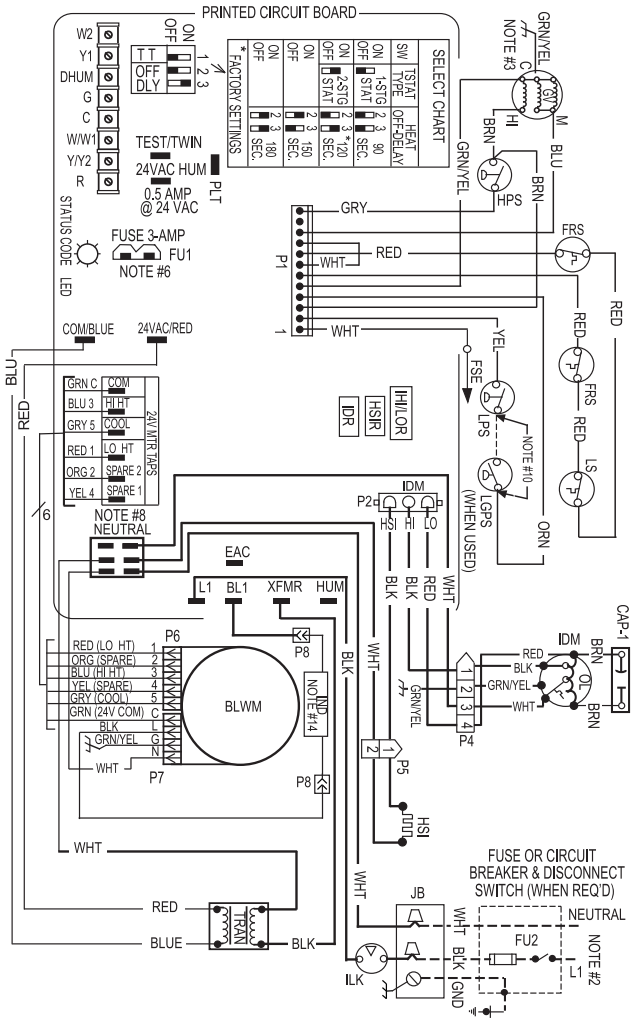

SCHEMATIC DIAGRAM

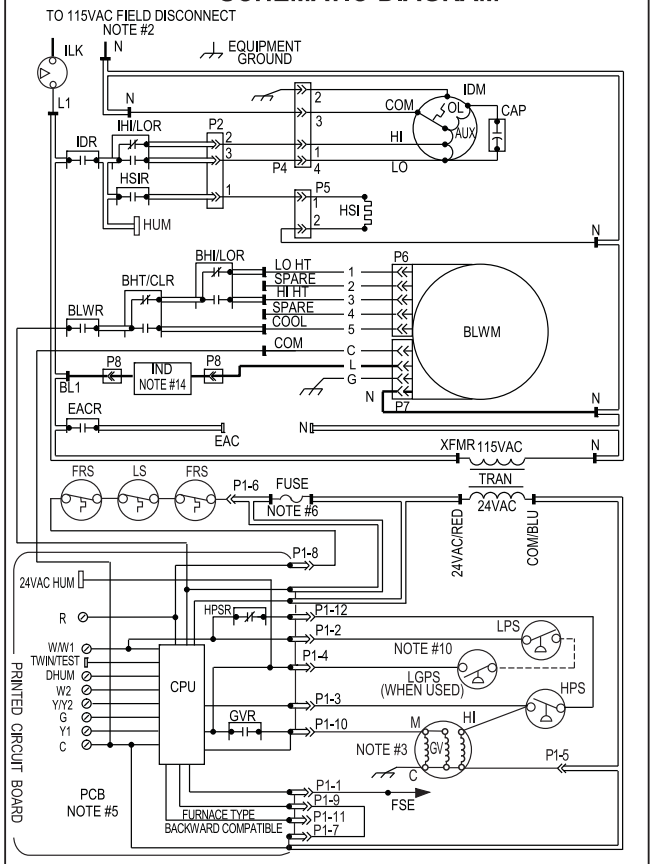

LEGEND

JUNCTION TERMINAL	FACTORY POWER WIRING (115VAC)
CONTROL TERMINAL	FACTORY CONTROL WIRING (24VAC)
PCB CONTROL TERMINAL	FIELD CONTROL WIRING (24VAC)
FIELD EARTH GROUND	CONDUCTOR ON CONTROL
EQUIPMENT GROUND	FIELD WIRING SCREW TERMINAL
	PLUG RECEPTACLE

BHI/LOR	Blower Motor Speed Change Relay, Spdt	IDR	Induced Draft Motor Relay, Spst - (N.O.)
BHT/CLR	Blower Motor Speed Change Relay, Spdt	IND	Inductor (See Note #14)
BLWR	Blower Motor Relay, Spst - (N.O.)	IHI/LOR	Inducer Motor Speed Change Relay, Spdt
BLWM	Blower Motor, Ecm - X - 13	ILK	Blower Access Panel Interlock Switch, Spst - (N.O.)
CAP	Capacitor		
CPU	Microprocessor And Circuitry	JB	Junction Box
DHUM	Dhum Connection	LED	Light-emitting Diode For Status Codes - Green
EAC	Electronic Air Cleaner Connection (115 Vac 1.0 Amp Max.)	LGPS	Low Gas Pressure Switch, Spst - (N.O.)
FRS	Flame Rollout Sw. - Manual Reset, Spst - (N.C.)	LPS	Low-heat Pressure Switch, Spst (N.O.)
FSE	Flame-proving Electrode	LS	Limit Switch, Auto-reset, Spst (N.C.)
FU 1	Fuse, 3 Amp, Automotive Blade Type, Factory Installed	OL	Auto-reset Internal Motor Overload Temp Switch (N.C.)
FU 2	Fuse Or Circuit Breaker Current Interrupt Device (Field Installed & Supplied)	PCB	Printed Circuit Board Control
GND	Equipment Ground	P1	12 - Circuit PCB Connector
GV	Gas Valve-redundant	P2	3 - Circuit PCB HSI & IDM Connector
GVR	Gas Valve Relay, Dpst - (N.O.)	P4	4 - Circuit IDM Connector
HPS	High-heat Pressure Switch, Spst (N.O.)	P5	2 - Circuit HSI Connector
HPSR	High-heat Pressure Switch Relay, Spst (N.C.)	P6	5 - Circuit Blwm Speed Tap Connector
HSI	Hot Surface Igniter (115 Vac)	P7	4 - Circuit Blwm Power Connector
HSIR	Hot Surface Igniter Relay, Spst - (N.O.)	P8	1 - Circuit Inducer Splice Connector (See Note #14)
24VAC HUM	24 Vac Humidifier Connection (0.5 Amp. Max.)	PLT	3 - Circuit Factory Test Connector
HUM	Line VAC Humidifier Connection	TRAN	Transformer - 115 Vac/24 Vac
IDM	Induced Draft Motor, PSC	TEST/TWIN	Component Test & Twin Terminal

338313–2 Rev. H

NOTES:

1. If any of the original equipment wire is replaced use wire rated for 105ºC.
2. Use only copper wire between the disconnect switch and the furnace junction box (JB).
3. This wire must be connected to furnace sheet metal for control to prove flame.
4. Symbols are electrical representation only.
5. Solid lines inside PCB are printed circuit board conductors and are not included in legend.
6. Replace only with a 3 amp fuse.
7. Inducer (IDM) motor contains internal auto-reset thermal overload switches (OL). Blower motor is locked-rotor overload protected by redundant electronic control circuits.
8. Neutral connections are interchangeable within the NEUTRAL connector block.
9. Blower motor speed selections are for average conditions, see installation instructions for optimum selection.
10. Factory connected when LGPS is not used.
11. Ignition-lockout will occur after four consecutive unsuccessful trials-for-ignition. Control will auto-reset after three hours.
12. Blower-on delay: gas high-heat 25 seconds, gas low-heat 45 seconds, cooling or heat pump 2 seconds.
13. Blower-off delay: gas heating selections are 90, 120, 150 or 180 seconds, cooling or heat pump 90 seconds or 5 seconds when dehumidify call is active.
14. Inductor (3/4 HP, 1 HP).

Figure 16 **Troubleshooting Guide – Flow Chart**

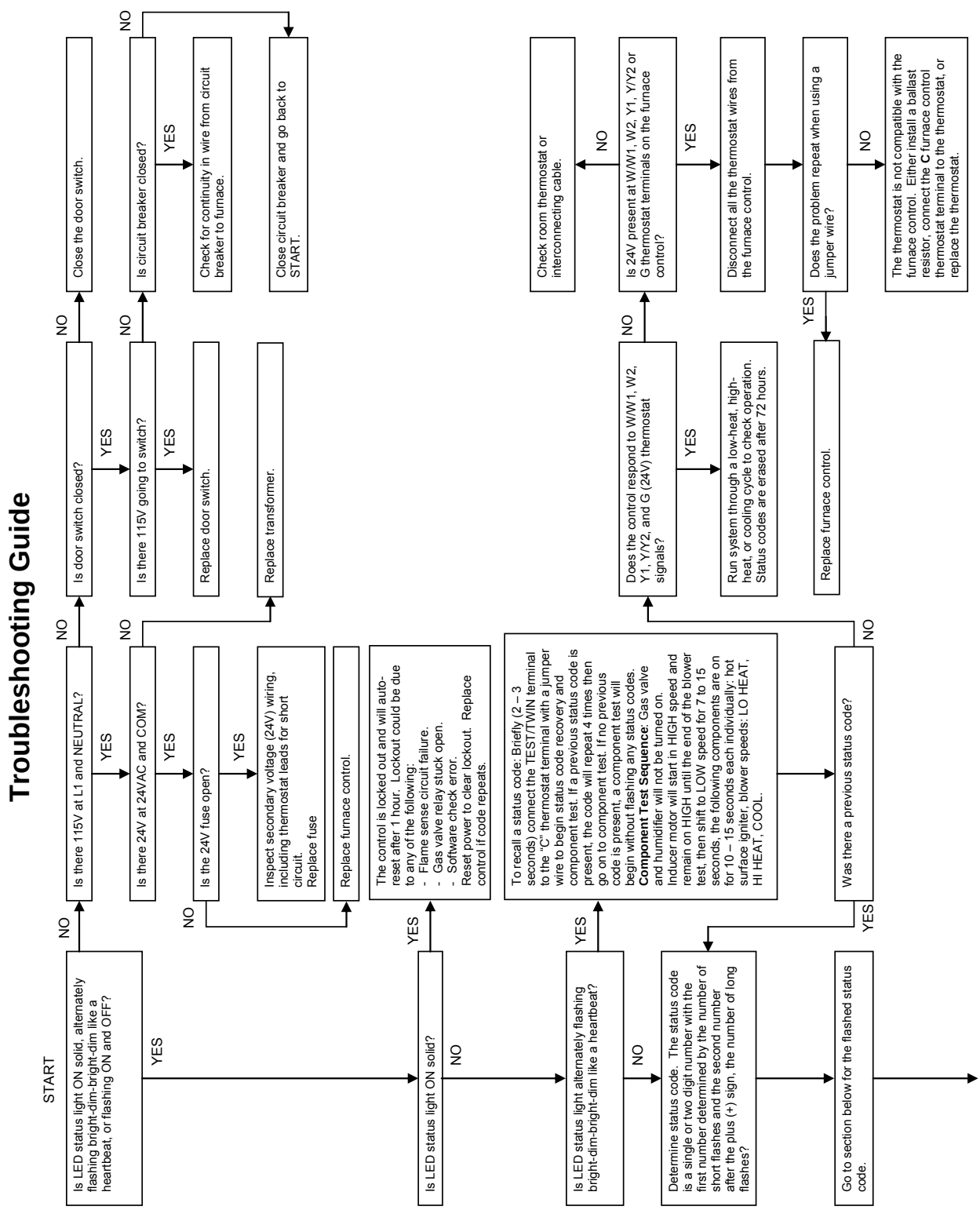

Figure 16 (CONT.) Troubleshooting Guide – Flow Chart

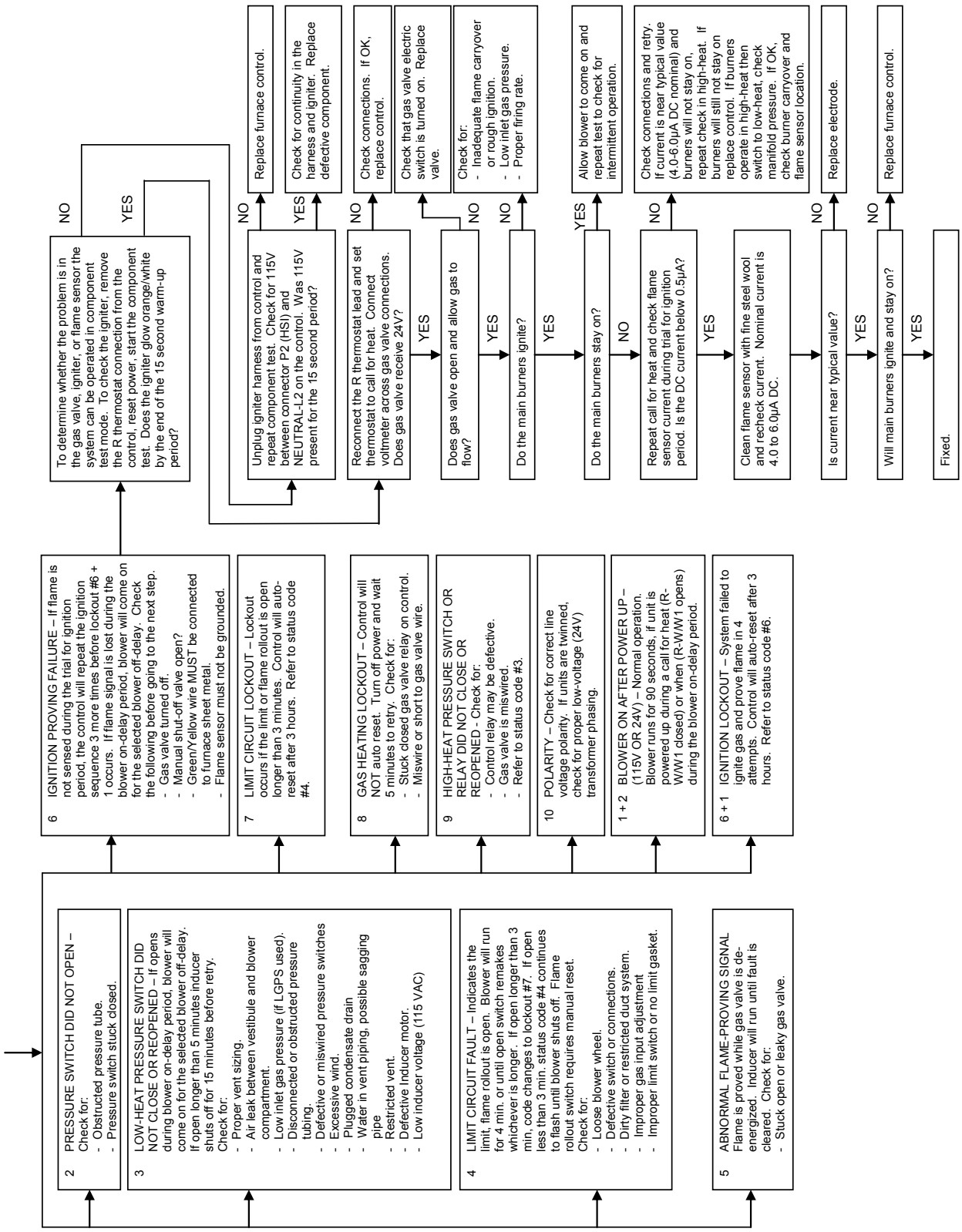

Sequence of Operation

NOTE: Furnace control must be grounded for proper operation or control will lockout. Control is grounded through green wire connected to gas valve and burner bracket screw. Using the schematic diagram in **Figure 15**, follow the sequence of operation through the different modes. Read and follow the wiring diagram very carefully.

NOTE: If a power interruption occurs during a call for heat (W/W1 or W/W1−and−W2), the control will run the blower for the selected heat off−delay period two seconds after power is restored, if the thermostat is still calling for gas heating. The green LED light will flash a status code 1+2 during this period, after which the LED will switch to a heartbeat, as long as no faults are detected. After this period, the furnace will respond to the thermostat normally.

The blower door must be installed for power to be conducted through the blower door interlock switch ILK to the furnace control CPU, transformer TRAN, inducer motor IDM, blower motor BLWM, hot−surface igniter HSI, and gas valve GV.

Two−Stage Heating with Single−Stage Thermostat

NOTE: The thermostat type switch (TT) selects either the two−stage thermostat operation mode when ON, (see item 2) or the single stage thermostat operation mode when OFF in response to a call for heat. When the W2 thermostat terminal is energized it will always cause high−heat operation when the R to W circuit is closed, regardless of the setting of the thermostat type switch. This furnace can operate as a two−stage furnace with a single−stage thermostat because the furnace control CPU includes a programmed sequence of controlled operation, which selects low−heat for the first 12 minutes of operation then switches to high heat operation.

If the power is interrupted, the control CPU will operate in low heat for 12 minutes then it will switch to high−heat, as long as the thermostat continues to call for heat.

The wall thermostat “calls for heat”, closing the R to W circuit. The furnace control performs a self−check, verifies the low−heat and high−heat pressure switch contacts LPS and HPS are open, and starts the inducer motor IDM in high−speed. The HUM terminal is energized for a 115V humidifier (if used).

a. Inducer Prepurge Period (see **Figure 15** schematic diagram)
   (1.) Low heat (W/W1) the inducer motor IDM comes up to high−speed, the low−heat pressure switch LPS closes. After the low−heat pressure switch closes the furnace control CPU will begin a 15−second prepurge period, and continue to run the inducer motor IDM at high−speed.
   (2.) High Heat (W/W1+W2) the inducer motor IDM comes up to high speed and the high−heat pressure switch relay HPSR is de−energized to close the NC contact. When sufficient pressure is available, the high−heat pressure switch HPS closes, and the high−heat gas valve solenoid GV−HI is energized. After LPS closes, 24VAC power is supplied for a field−installed humidifier at the HUM 24VAC terminal and the furnace control CPU begins a 15−second prepurge period. If the high−heat pressure switch HPS fails to close and the low−heat pressure switch LPS closes, the furnace will operate at low−heat gas flow rate until the high−heat pressure switch closes for a maximum of 2 minutes after ignition. If HPS doesn’t close after 2 minutes from LPS closing, GV is turned off and heat off delay is completed. Then a new cycle will begin if a call for heat remains.

b. **Igniter Warm−Up**−At the end of the prepurge period, the (Hot Surface Igniter) HSI is energized for a 17−second igniter warm−up period.

c. **Trial−for−Ignition Sequence**−When the igniter warm−up period is completed the main gas valve relay contacts GVR close to energize the gas valve solenoid GV−M, the gas valve opens. The gas valve solenoid GV−M permits gas flow to the burners where it is ignited by the HSI. 5 sec after the GVR closes, a 2−sec flame proving period begins. The HSI igniter will remain energized until the flame is sensed or until the 2−sec flame proving period begins. If the furnace control CPU operates in high−heat operation, the high−heat gas valve solenoid GV−HI is also energized.

d. **Flame−Proving**−When the burner flame is proved at the flame−proving sensor electrode FSE, the inducer motor IDM switches to low−speed unless running at high−heat, and the furnace control CPU begins the blower−ON delay period and continues to hold the gas valve GV−M open. If the burner flame is not proved within two seconds, the control CPU will close the gas valve GV−M, and the control CPU will repeat the ignition sequence for up to three more Trials−For−Ignition before going to Ignition− Lockout. Lockout will be reset automatically after three hours, or by momentarily interrupting 115 vac power to the furnace, or by interrupting 24 vac power at 24VAC or COM to the furnace control CPU (not at W/W1, G, R, etc.). If flame is proved when flame should not be present, the furnace control CPU will lock out of Gas−Heating mode and operate the inducer motor IDM on high speed until flame is no longer proved.

e. **Blower On Delay**−If the burner flame is proven, the blower on delay for low−heat and high−heat are as follows:
   Low−Heat−45 seconds after the gas valve GV−M is energized the blower motor (BLWM) is energized at LO HEAT speed.
   High−Heat−25 seconds after the gas valve GV−M is energized the BLWM is energized at HI HEAT speed. Simultaneously, the electronic air cleaner (EAC) terminal is energized and remains energized as long as the BLWM is energized.

f. **Switching from Low−to High−Heat**−If the furnace control CPU switches from low−heat to high−heat, the furnace control CPU will switch the inducer motor IDM speed from low to high. The high−heat pressure switch relay HPSR is de−energized to close the NC contact. When sufficient pressure is available the high−heat pressure switch HPS closes, and the high−heat gas valve solenoid GV−HI is energized. The blower motor BLWM will switch to HI HEAT speed 5 seconds after the furnace control CPU switches from low−heat to high−heat.

g. **Switching from High− to Low−Heat**−The furnace control CPU will not switch from high−heat to low−heat while the thermostat R−to−W circuit is closed when using a single stage thermostat.

h. **Heat−Off Delay**−When the thermostat is satisfied, the R to W circuit is opened, de−energizing the gas valve GV−M, stopping gas flow to the burners, and de−energizing the humidifier terminal HUM 24VAC. The inducer motor IDM will remain energized for a 15−second post−purge period then turn off, also turning off HUM for 115V humidifier. The blower motor BLWM and air cleaner terminal EAC will remain energized for 90, 120, 150, or 180 seconds (depending on selection at heat−off delay switches). The furnace control CPU is factory−set for a 120−second heat−off delay.

15. **Two−Stage Thermostat and Two−Stage Heating** (See **Figure 17** − **Figure 22** for thermostat connections)

NOTE: In this mode the TT switch (SW1−1) must be ON to select the two−stage thermostat mode in response to closing the thermostat R−to−W1 circuit. Closing the thermostat R−to−W1−and−W2 circuits always causes high−heat operation, regardless of the setting of the thermostat type.

The wall thermostat "calls for heat", closing the R−to−W1 circuit for low−heat or closing the R−to−W1 and−W2 circuits for high−heat. The furnace control performs a self−check, verifies the low−heat and high−heat pressure switch contacts LPS and HPS are open, and starts the inducer motor IDM in high−speed.

The start up and shut down functions and delays described in item 1. above apply to the two−stage heating mode as well, except for switching from low− to high−heat and vice versa.

a. **Switching from Low− to High−Heat**−If the thermostat R−to− W1 circuit is closed and the R−to−W2 circuit closes, the furnace control CPU will switch the inducer motor IDM speed from low to high. The high−heat pressure switch relay HPSR is de−energized to close the NC contact. When sufficient pressure is available the high−heat pressure switch HPS closes, and the high−heat gas valve solenoid GV−HI is energized. The blower motor BLWM will switch to HI HEAT speed five seconds after the R−to−W2 circuit closes.

b. **Switching from High− to Low−Heat**−If the thermostat R−to−W2 circuit opens, and the R−to−W1 circuit remains closed, the furnace control CPU will switch the inducer motor IDM speed from high to low. The high−heat pressure switch relay HPSR is energized to open the NC contact and de−energize the high−heat gas valve solenoid GV−HI. When the inducer motor IDM reduces pressure sufficiently, the high−heat pressure switch HPS will open. The gas valve solenoid GV−M will remain energized as long as the low−heat pressure switch LPS remains closed. The blower motor BLWM will switch to LO HEAT speed 5 seconds after the R−to−W2 circuit opens.

16. **Cooling Mode**−The thermostat "calls for cooling."

a. **Single−Speed Cooling**−
(See **Figure 17** − **Figure 22** for thermostat connections)
The thermostat closes the R−to−G−and−Y circuits. The R−to−Y circuit starts the outdoor unit, and the furnace control R−to−G−and−Y/Y2 circuits start the furnace blower motor BLWM on cool speed.
The electronic air cleaner terminal EAC is energized with 115 vac when the blower motor BLWM is operating.

When the thermostat is satisfied, the R−to−G and−Y circuits are opened. The outdoor unit will stop, and the furnace blower motor BLWM will continue operating on the COOL speed for an additional 90 seconds. Jumper Y/Y2 to DHUM to reduce the cooling off−delay to 5 seconds. (See **Figure 4**)

b. **Two−Speed Cooling**

The thermostat closes the R−to−G−and−Y1 circuits for low−cooling or closes the R−to−G−and−Y1−and−Y2 circuits for high−cooling. The R−to−Y1 circuit starts the outdoor unit on low−cooling speed, and the furnace control R−to−G−and−Y1 circuit starts the furnace blower motor BLWM on low−cool speed (same speed as LO HEAT). The R−to−Y1−and−Y2 circuits start the outdoor unit on high−cooling speed, and the furnace control R−to−G−and−Y1 and −Y2 circuits start the furnace blower motor BLWM on COOL speed. The electronic air cleaner terminal EAC is energized with 115 vac whenever the blower motor BLWM is operating. When the thermostat is satisfied, the R−to−G−and−Y1 or R−to−G−and−Y1−and−Y2 circuits are opened. The outdoor unit stops, and the furnace blower BLWM and electronic air cleaner terminal EAC will remain energized for an additional 90 seconds. Jumper Y1 to DHUM to reduce the cooling off−delay to 5 seconds. (See **Figure 4**)

17. **Dehumidify Mode**
(See **Figure 17** − **Figure 22** for humidity sensing thermostat connections) The dehumidification output, H on the humidity sensing thermostat should be connected to the furnace control thermostat terminal DHUM. When there is a dehumidify demand, the DHUM input is activated, (24 vac signal is removed from the H input terminal). In other words, the DHUM input logic is reversed. The DHUM input is turned ON when no dehumidify demand exists.

Activation/Deactivation

Once 24 vac is detected by the furnace control on the DHUM input, the furnace control operates enables the dehumidify mode. If the DHUM input is off for more than 48 hours, the furnace control disables the dehumidify mode.

The cooling operation described in item 3. above also applies to operation with a humidity sensing thermostat. The exceptions are listed below:

a. Low cooling − When the R−to−G−and−Y1 circuit is closed and there is a demand for dehumidification,the furnace blower motor BLWM will continue running at low−cool speed (same speed as LO HEAT).

b. High cooling −When the R−to−G−and−Y/Y2 circuit is closed and there is a demand for dehumidification,the furnace blower motor BLWM will drop the blower speed from COOL to HI HEAT for a maximum of 10 minutes before reverting back to COOL speed. If there is still a demand for dehumidification after 20 minutes, the furnace control CPU will drop the blower speed back to HI HEAT speed. This alternating 10−minute cycle will continue as long as there is a call for cooling.

c. Cooling off−delay − When the "call for cooling" is satisfied and there is a demand for dehumidification, the cooling blower−off delay is decreased from 90 seconds to 5 seconds.

18. **Continuous Blower Mode**
When the R−to−G circuit is closed by the thermostat, the blower motor BLWM will operate on continuous−blower speed LO HEAT speed. Terminal EAC is energized as long as the blower motor BLWM is energized. During a call for heat, the blower BLWM will stop during igniter warm−up (17 seconds), ignition (7 seconds), and blower−ON delay (45 seconds in low−heat, and 25 seconds in high−heat), allowing the furnace heat exchangers to heat up more quickly, then restarts at the end of the blower−ON delay period at LO HEAT or HI HEAT speed respectively. The blower motor BLWM will revert to continuous−blower speed after the heating cycle is completed. In high−heat, the furnace control CPU will hold the blower motor BLWM at HI HEAT speed during the selected blower−OFF delay period before reverting to continuous−blower speed.
When the thermostat "calls for low−cooling", the blower motor BLWM will operate at low−cool speed (same speed as LO HEAT).
When the thermostat "calls for high−cooling", the blower motor BLWM will operate at COOL speed. When the thermostat is satisfied, the blower motor BLWM will operate an additional 90 seconds on COOL speed before reverting back to continuous−blower speed.
When the R−to−G circuit is opened, the blower motor BLWM will continue operating for an additional 5 seconds, if no other function requires blower motor BLWM operation.

19. **Heat Pump**
(See **Figure 17** − **Figure 22** for thermostat connections)
When installed with a heat pump, the furnace control automatically changes the timing sequence to avoid long blower off times during demand defrost cycles. When the R−to−W/W1−and−Y1 or R−to−W/W1−and−Y1−and−G circuits are energized the furnace control CPU will switch to or turn on the blower motor BLWM at low−cool speed (same speed as LO HEAT), and begin a low−heat cycle. The blower motor BLWM will remain on until the end of the prepurge period, then shut off for 24 seconds then

come back on at LO HEAT speed. When the W/W1 input signal disappears, the furnace control begins a normal inducer post–purge period and the blower remains running at LO HEAT speed. If the R–to–W/W1–and–Y1–and–G signals disappear at the same time, the blower motor BLWM will remain on for the selected heat–off delay period. If the R–to–W/W1–and–Y1 signals disappear, leaving the G signal, the blower motor BLWM will remain on for the selected heat–off delay period then switch to continuous–blower speed.

When the R–to–W/W1–and–Y/Y2, R–to–W/W1–and–Y/Y2– and–G, R–to–W/W1–and–Y1–and–Y/Y2, or R–to–W/W1–and– Y1–and–Y/Y2–and–G circuits are energized the furnace control CPU will switch to or turn on the blower motor BLWM at COOL speed, and begin a high–heat cycle. The blower motor BLWM will remain on until the end of the prepurge period, then shut off for 24 seconds then come back on at HI HEAT speed. When the W/W1 input signal disappears, the furnace control begins a normal inducer post–purge period and the blower switches to COOL speed after a 3 second delay. If the R–to–W/W1–and–Y/Y2–and–G or R–to–W/W1–and–Y1–and– Y/Y2–and–G signals disappear at the same time, the blower motor BLWM will remain on for the selected heat–off delay period. If the R–to–W/W1–and–Y/Y2 or R–to–W/W1–and–Y1–and–Y/Y2 signals disappear, leaving the G signal, the blower motor BLWM will remain on for the selected heat–off delay period then switch to continuous–blower speed.

Component Self Test

Refer to page 14 for instructions.

Figure 17 Two–Stage Furnace with Single–Speed Air Conditioner

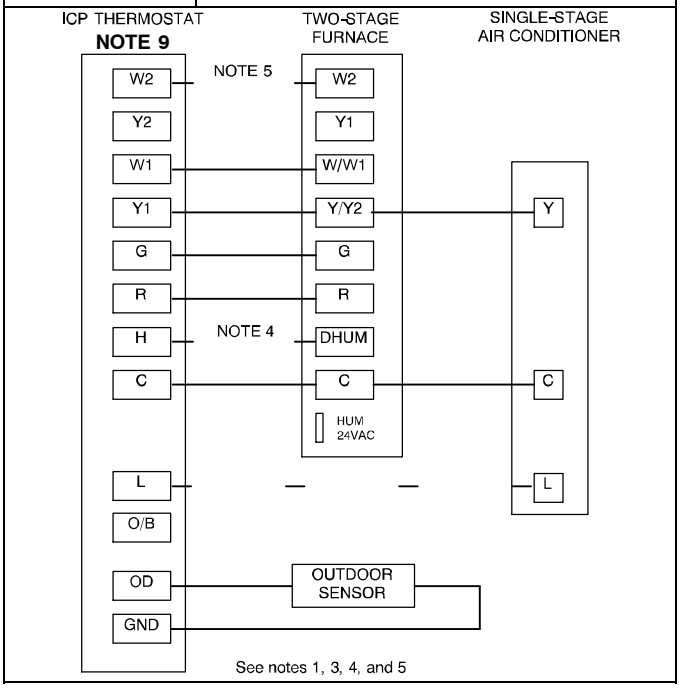

Figure 18 Two–Stage Furnace with Two–Stage Air Conditioner

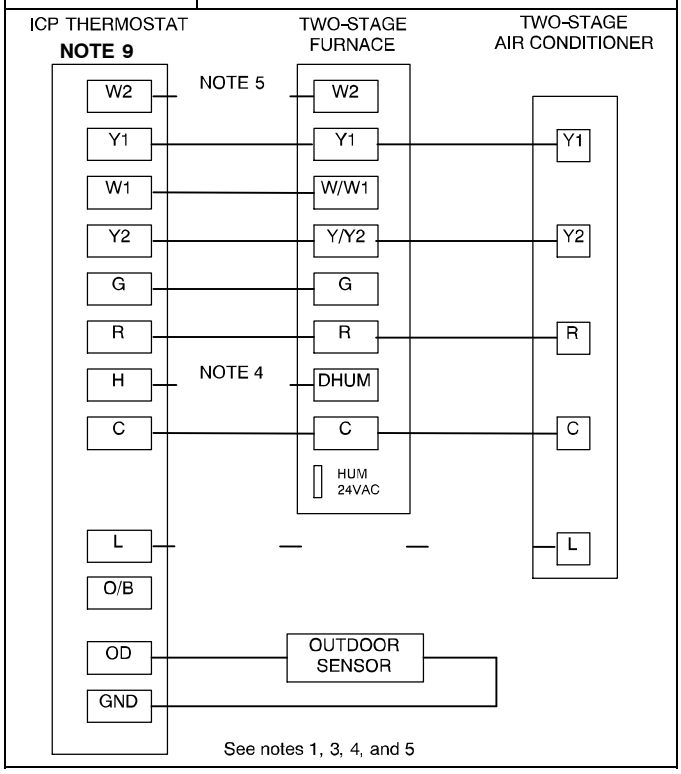

Figure 19 Two–Stage Furnace with Single–Stage Heat Pump (Dual Fuel)

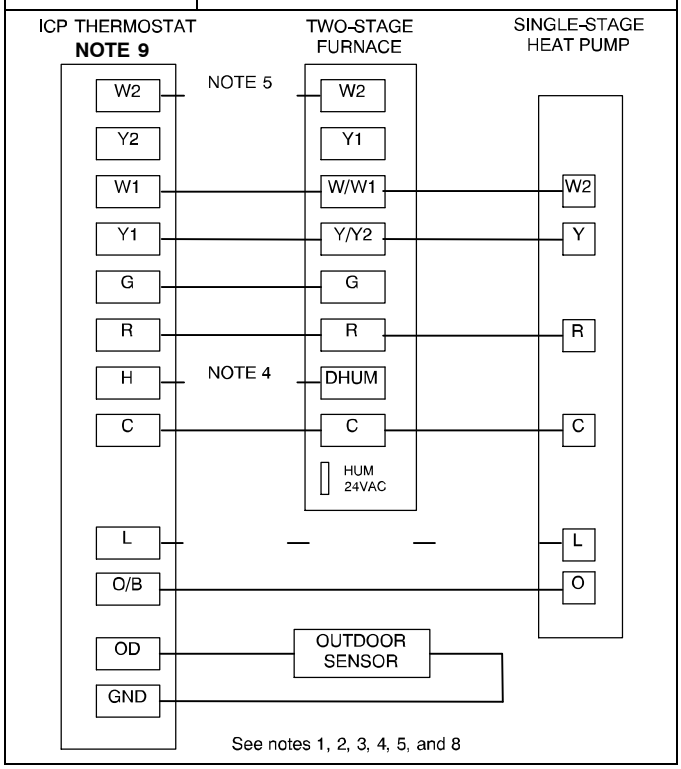

Figure 20 Two−Stage Furnace with Two−Stage Heat Pump (Dual Fuel)

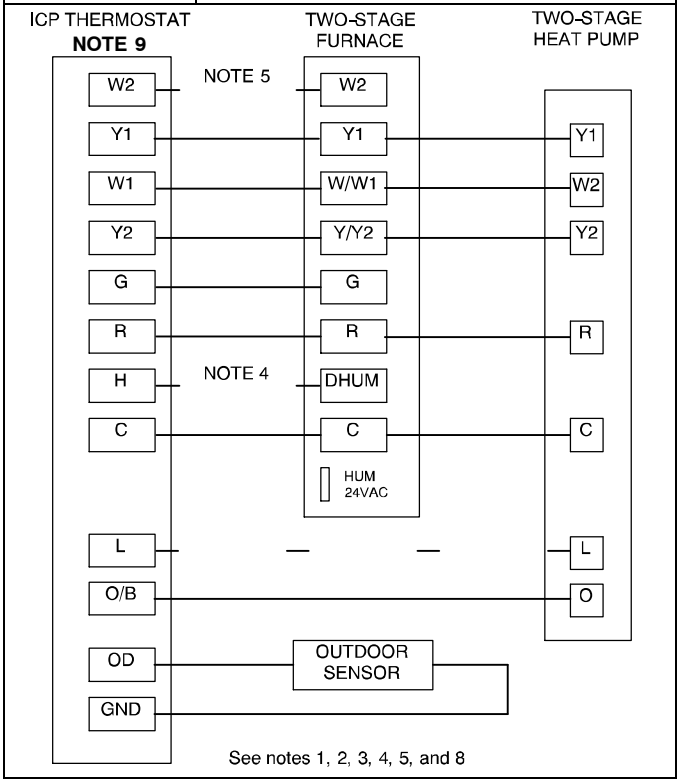

Figure 21 AC with Two−Stage Furnace, Humidifier, and Dehumidification

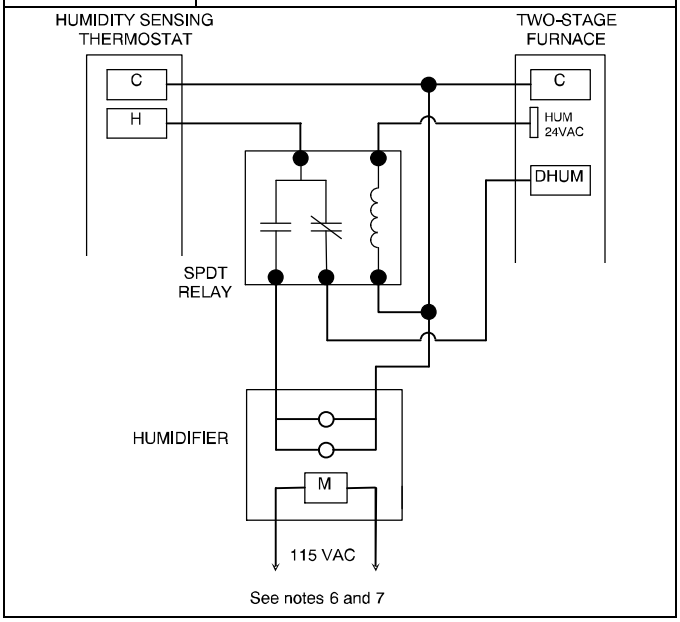

Figure 22 HP with Two−Stage Furnace, Humidifier, and Dehumidification

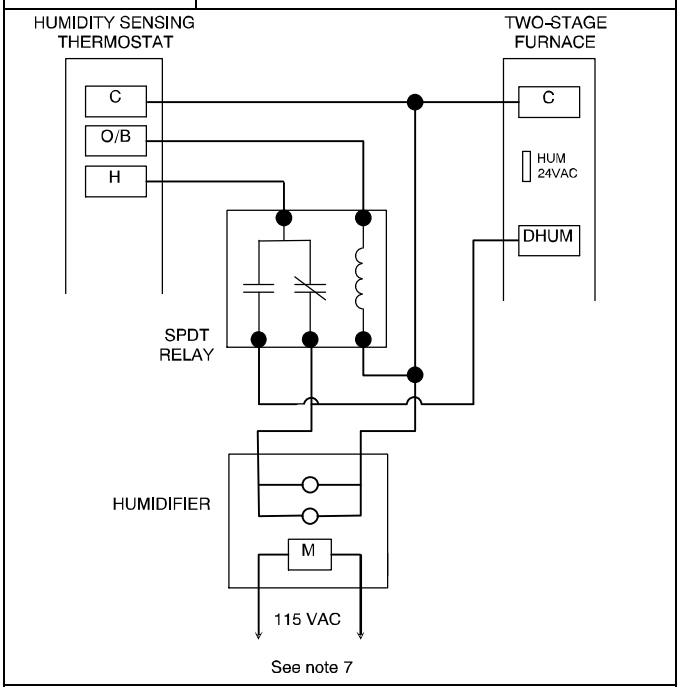

Figure 23 Two−Stage Furnace and Humidifier Only

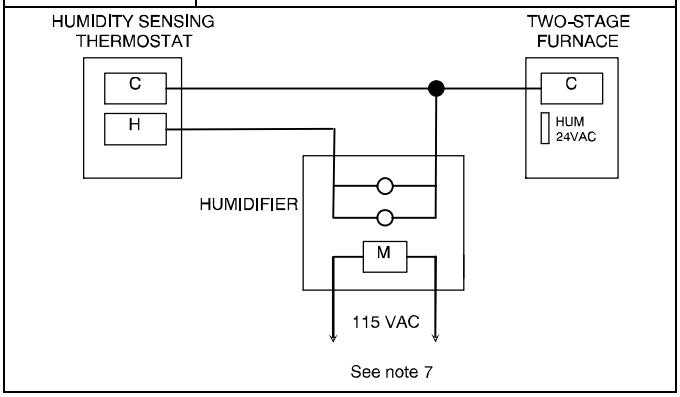

For Figure 17 − Figure 22

1. Refer to outdoor equipment Installation Instructions for additional information and setup procedure.
2. Outdoor Air Temperature Sensor must be attached in all dual fuel application.
3. Refer to ICP thermostat Installation Instructions for additional information and setup procedure.
4. When using a Humidity Sensing Thermostat, set DEHUMIDIFY OPTIONS to H DE−ENRGZD FOR DEHUM
5. Optional connection for Two−Stage: If wire is connected, SW1−1(TT) on furnace control should be set to ON position to allow ICP Thermostat to control the furnace staging.
6. HUM 24VAC terminal is 24 VAC and is energized when the low pressure switch closes during a call for heat.
7. When connecting 115 VAC to humidifier use a separate 115 VAC supply.
8. When using a humidifier on a HP installation, connect humidifier to hot water.
9. Thermostat signals may vary. Consult thermostat installation instructions for more information.

PARTS REPLACEMENT INFORMATION GUIDE

Casing Group
Control door
Blower door
Top filler plate
Bottom filler plate
Door Knob Assembly

Electrical Group
Control box
Junction box
Limit switch(es)
Circuit board
Door switch
Transformer
3–Amp fuse
Flame Rollout switch
Main Wiring harness
Blower Motor harness (when used)

Filter Group
Filter(s)

Blower Group
Cut–off Plate
Blower housing
Blower motor
Blower wheel
Capacitor (when used)
Capacitor strap (when used)
Power choke (where used)

Gas Control Group
Manifold
Burner
Orifice
Flame sensor
Hot surface igniter
Gas valve

Heat Exchanger Group
Primary Heat Exchanger assembly
Primary Heat Exchanger cell panel
Secondary Heat Exchanger assembly
Coupling box
Containment Plate
Tubing Gaskets

Inducer Group
Pressure switch(es)
Inducer assembly
Inducer
Inducer motor
Motor Module (when used)
Inducer motor capacitor (when used)
Collector box
Condensate trap
Condensate trap elbow
Gaskets

⚠ WARNING

FIRE, EXPLOSION, ELECTRICAL SHOCK AND CARBON MONOXIDE POISONING HAZARD

Failure to follow this warning could result in dangerous operation, personal injury, death or property damage.

Improper installation, adjustment, alteration, service, maintenance, or use can cause carbon monoxide poisoning, explosion, fire, electrical shock, or other conditions which may cause personal injury or property damage. Consult a qualified installer, service agency, local gas supplier, or your distributor or branch for information or assistance. The qualified installer or agency must use only factory-authorized and listed kits or accessories when modifying this product.

Have available the product/model number and the serial number located on the unit rating plate to ensure correct replacement parts.

TO OBTAIN INFORMATION ON PARTS: Consult your installing dealer or the classified section of your local telephone directory under the “Heating Equipment“ or “Air Conditioning Contractors and Systems” headings for dealer listing by brand name.

International Comfort Products
Consumer Relations Department
P.O. Box 128
Lewisburg, TN 37091, USA
931–270–4100

PRODUCT NOMENCLATURE

DIGIT POSITION	1	2	3	4	5	6, 7, 8	9, 10	11, 12	13	14
	G	**9**	**M**	**X**	**T**	**060**	**17**	**14**	**A**	**1**

G = Mainline Look 1
F = Mainline Look 2
N = Entry
9 = 90% – 100%
EFFICIENCY

M = Multiposition
H = Horizontal
U = Upflow
D = Downflow
FEATURE

A = Modulating Variable Speed ECM
V = Variable Speed
X = ECM
S = Single–stage
T = Two–stage
FEATURE

B = Base AFUE Efficiency
E = Extra AFUE Efficiency
C = Communicating
D = Dual Certified 2–pipe or 1–pipe
R = 2–pipe only
S = Single–stage
T = Two–stage
N = Standard
L = Low Nox
FEATURE

040 = 40,000 BTU/hr
060 = 60,000 BTU/hr
080 = 80,000 BTU/hr
100 = 100,000 BTU/hr
120 = 120,000 BTU/hr
INPUT HEAT

14 = 14–3/16”
17 = 17–1/2”
21 = 21”
24 = 24–1/2”
CABINET WIDTH

10 = 1000 CFM (max)
14 = 1400 CFM (max)
16 = 1600 CFM (max)
20 = 2000 CFM (max)
22 = 2200 CFM (max)
COOLING AIRFLOW

SALES (MAJOR) REVISION DIGIT

ENGINEERING (MINOR) REVISION DIGIT

Specifications subject to change without notice.
Copyright 2013 International Comfort Products