INSTALLATION INSTRUCTIONS

EXTERNAL TRAP KIT
FOR USE WITH 35 IN. (889 MM) CONDENSING GAS FURNACE
NAHB00101CT OR FAST # 1171916

NOTE: Read the entire instruction manual before starting the installation.

SAFETY CONSIDERATIONS

⚠ WARNING

FIRE, EXPLOSION, ELECTRICAL SHOCK HAZARD

Failure to follow this warning could result in personal injury, death and/or property damage.

The ability to properly perform maintenance on this equipment requires certain knowledge, mechanical skills, tools, and equipment. If you do not possess these, do not attempt to perform any maintenance on this equipment other than those procedures recommended in the Home Owner's Information Manual.

Improper installation, adjustment, alteration, service, maintenance, or use can cause explosion, fire, electrical shock, or other conditions which may cause death, personal injury, or property damage. Consult a qualified installer, service agency, or your distributor or branch for information or assistance. The qualified installer or agency must use factory-authorized kits or accessories when modifying this product. Refer to the individual instructions packaged with the kits or accessories when installing.

Follow all safety codes. Wear safety glasses, protective clothing, and work gloves. Have a fire extinguisher available. Read these instructions thoroughly and follow all warnings or cautions included in literature and attached to the unit. Consult local building codes, the current editions of the National Fuel Gas Code (NFGC) NFPA 54/ANSI Z223.1 and the National Electrical Code (NEC) NFPA 70.

In Canada, refer to the current editions of the National Standards of Canada CAN/CSA-B149.1 and .2 Natural Gas and Propane Installation Codes, and Canadian Electrical Code CSA C22.1.

Recognize safety information. This is the safety-alert symbol ⚠. When you see this symbol on the unit and in instructions or manuals, be alert to the potential for personal injury.

Understand the signal words **DANGER**, **WARNING**, and **CAUTION**. These words are used with the safety-alert symbol. **DANGER** identifies the most serious hazards which **will** result in severe personal injury or death. **WARNING** signifies hazards which **could** result in personal injury or death. **CAUTION** is used to identify unsafe practices which **may** result in minor personal injury or product and property damage. **NOTE** and **NOTICE** are used to highlight suggestions which will result in enhanced installation, reliability, or operation.

Special Venting Requirements for Installations in Canada

Installation in Canada must conform to the requirements of CSA B149 code. Vent systems **must** be composed of pipe, fittings, cements, and primers listed to ULC S636. The special vent fittings, accessory concentric vent termination kits, and accessory external drain trap have been certified to ULC S636 for use with those Royal Pipe and IPEX PVC vent components which have been certified to this standard. In Canada, the primer and cement must be of the same manufacturer as the vent system – GVS-65 Primer (Purple) for Royal Pipe or IPEX System 636, PVC/CPVC Primer, Purple Violet for Flue Gas Venting and GVS-65 PVC Solvent Cement for Royal Pipe or IPEX System $636_{(1)}$t, PVC Cement for Flue Gas Venting, rated Class IIA, 65 deg C. must be used with this venting system - do not mix primers and cements from one manufacturer with a vent system from a different manufacturer. Follow the manufacturer's instructions in the use of primer and cement and never use primer or cement beyond its expiration date.

The safe operation, as defined by ULC S636, of the vent system is based on following these installation instructions, the vent system manufacturer's installation instructions, and proper use of primer and cement. All fire stop and roof flashing used with this system must be UL listed material. Acceptability under Canadian standard CAN/CSA B149 is dependent upon full compliance with all installation instructions. Under this standard, it is recommended that the vent system be checked once a year by qualified service personnel.

The authority having jurisdiction (gas inspection authority, municipal building department, fire department, etc) should be consulted before installation to determine the need to obtain a permit.

*IPEX System 636™ is a trademark of IPEX Inc.

Consignes spéciales pour l'installation de ventilation au Canada

L'installation faite au Canada doit se conformer aux exigences du code CAN/CSA B149-2010. Ce systême de ventillation **doit** se composer de tuyaux, raccords, ciments et apprêts conformes au ULC S636. La tuyauterie de ventilation des gaz, ses accessoires, le terminal concentrique mural ainsi que l'ensemble du drain de condensation extérieur fourni par le fabricant de cette fournaise ont été certifiés ULC S636 pour l'application des composantes Royal Pipe, IPEX PVC qui sont certifiées à ce standard. Au Canada, l'apprêt et le ciment doivent être du même fabricant que le système d'évacuation. L'apprêt GVS-65 (Purple) et le ciment-solvant GVS-65 doivent être utilisé avec les Royal Pipe. Système IPEX 636, apprêt PVC/CPVC, Purple pour évacuation des gaz de combustion et système IPEX 636(1)t, ciment PVC pour évacuation des gaz de combustion, coté classe IIA, 65 deg C. doivent être utilisés avec le système d'évacuation IPEX 636 – Ne pas combiner l 'apprêt et le ciment d'un manufacturier avec un système d'évacuation d'un manufacturier différent.

Bien suivre les indications du manufacturier lors de l'utilisation de l'apprêt et du ciment et ne pas utiliser ceux-ci si la date d'expiration est atteinte.

L'opération sécuritaire, tel que définit par ULC S636, du système de ventilation est basé sur les instructions d'installation suivantes, ainsi que l'usage approprié de l'apprêt et ciment. Tout arrët feu et solin de toit utilisés avec ce système doivent être des matériaux listés UL. L'acceptation du standard Canadien CAN/CSA B149 est directement relié à l'installation conforme aux instructions ci- haut mentionnées. Le standard Canadien recommande l' inspection par un personel qualifié et ce, une fois par année.

Les autoritées ayant juridiction (inspecteurs de gas, inspecteurs en bâtiments, département des incendies, etc) devraient être consultées avant l'installation afin de déterminer si un permis est requis.

INTRODUCTION

This instruction covers the installation of the External Vent Trap Kit with the furnaces listed in **Table 1**. This kit may be applied to either or both the vent/exhaust piping system and/or the combustion-air inlet piping system.

Very high efficiency gas furnaces tend to condense nearly all of the water vapor products of combustion within the furnace. Since there is less water vapor to condense in the venting system, extra care must be given to verifying that the drain trap(s) will self-prime under normal conditions. IT IS IMPERATIVE that these instructions be followed fully to ensure proper operation of the venting drainage system.

⚠ WARNING

CARBON MONOXIDE POISONING HAZARD

Failure to follow these warnings could result in personal injury or death.

The Internal Drain Trap Plug MUST BE APPLIED to the vent side of the collector box trap connection of the furnace. Failure to do this may result in vent gasses being released into the living space.

Failure to use a properly constructed trap(s) or NOT water-priming trap(s) before operating furnace may allow positive pressure vent gases to enter the structure through drain tube. Vent gases contain carbon monoxide which is tasteless and odorless.

Table 1	**Allowed Gas Furnaces**			
(F,G)9MAC	(F,G)9MAE	(F,G)9MXT	N9MSE	WFS
(F,G)9MVT	(F,G)9MVE	(F,G)9MXE	N9MSB	WFA
(F,G)97CMN	(F,G)96CTN	(F,G)96VTN	N95ESN	R95ESN
N92ESN	N92ESN	(50 Hz) – F9MES		

DESCRIPTION AND USAGE

Use this External Vent Trap Kit (“Trap Kit”) to allow the furnace venting system to be positioned below the level of the furnace. In this configuration, the condensate from the venting system does NOT drain to the furnace. See **Figure 1**.

This Trap Kit may also be used for the combustion air inlet piping, either by itself, or in conjunction with the Trap Kit being applied to the vent/exhaust piping. When used for the combustion air inlet piping, only, the venting system must be installed as shown in the furnace installation instructions.

This External Vent Trap Kit (“Trap Kit”) contains the following items:

External Condensate Drain Trap	1
Trap-Tee Vent Fitting (2-in./50mm PVC)	1
Internal Drain Trap Plug	1

Application to Vent/Exhaust Piping Systems

The venting system is configured such that ALL of the venting system is sloped toward the Trap Kit, and therefore, all of the vent system condensate is directed to the Trap Kit. The Internal Drain Trap Plug MUST BE APPLIED to the vent side of the collector box trap connection of the furnace to prevent vent gasses from being introduced into the drainage system, and possibly the living space. See **Figure 3**.

Application to Combustion Air Inlet Piping Systems

This Trap Kit may used to help prevent liquid moisture from the inlet piping system from entering the furnace. The Trap Kit may be used on the inlet piping side, even if a Trap Kit is not used on the venting side. See **Figure 1**, **Figure 2** and **Figure 8** and the FURNACE installation instructions for more information on the application of the Trap Kit on combustion-air inlet piping systems.

NOTICE

OPTIONAL CONFIGURATION FOR COMBUSTION AIR INLET PIPE

In applications where there is a risk of excessive moisture entering the combustion air inlet pipe, a moisture trap may be added to the inlet pipe to help prevent moisture from entering the furnace from the combustion air inlet pipe.

When sizing venting systems, the equivalent length of the optional inlet pipe moisture trap must be taken into account.

Figure 8 shows the Trap Kit applied in upflow applications for combustion-air inlet piping. The Trap Kit may be applied in any furnace orientation—upflow, downflow, horizontal. The Trap Kit should be located as close as possible to the furnace. If the Trap Kit is applied ONLY to the combustion air inlet piping system, the vent/exhaust piping should be configured as shown in the furnace installation instructions, NOT these instructions.

⚠ CAUTION

UNIT OPERATION HAZARD

Failure to follow this caution could result in intermittent unit operation.

When used, install the Trap Kit at the lowest point of the combustion-air inlet piping system, within 24–in. (0.6 M) of the furnace. This will help prevent water build-up in the combustion-air inlet piping, and help prevent erratic unit operation.

Figure 1	Condensate Trap Plumbing Options for Vent or Combustion Air Pipe Below Furnace

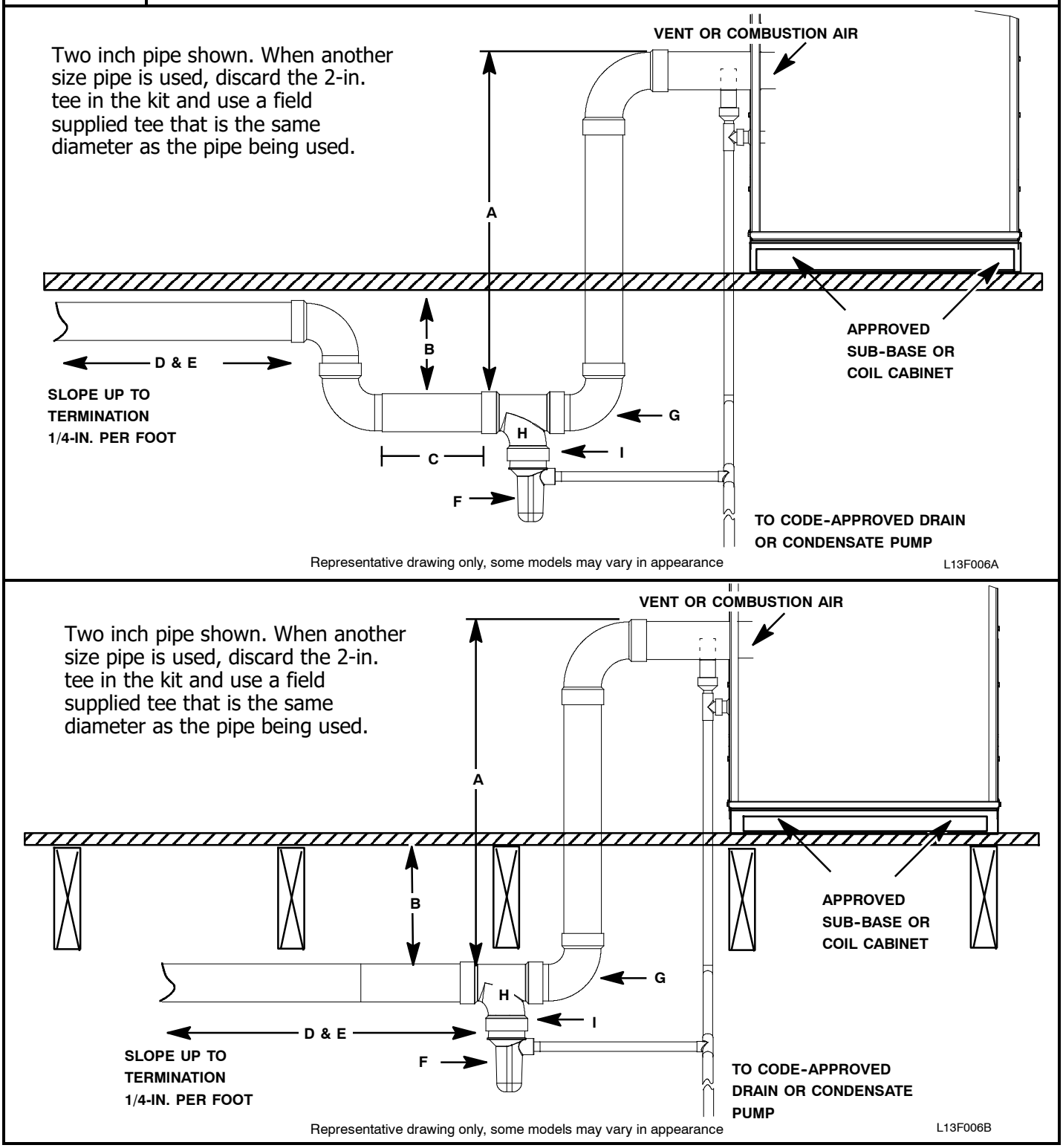

NOTE:

A. Maximum vertical distance from furnace exit to top of Vent Tee of 60-in. (1.5M)
B. Provide enough vertical clearance to allow for 1/4-inch per foot (20mm per meter) slope to termination
C. Maximum length of 36-in. (1 M); minimum length of 6-in. (150mm)
D. All vent or combustion air pipe must slope toward external condensate trap and vent tee
E. Follow restrictions for Maximum Exposed Vent Length as stated in furnace installation instructions
F. External Vent Trap MUST be protected from freezing
G. Elbow must be located within 6-in. (150mm) of Vent Tee
H. Flow of air may be either away from trap (vent side) or toward trap (combustion air side); curve of vent tee must be positioned toward termination (toward major flow of condensate), except as shown in Figure 2.
I. When larger diameter pipe is used, a field supplied reducer is required between the tee "H" and the drain trap "F"

NOTE: Some models not approved for downflow application.

Figure 2	Condensate Trap Plumbing Options for Combustion Air Pipe (ONLY) Above Furnace

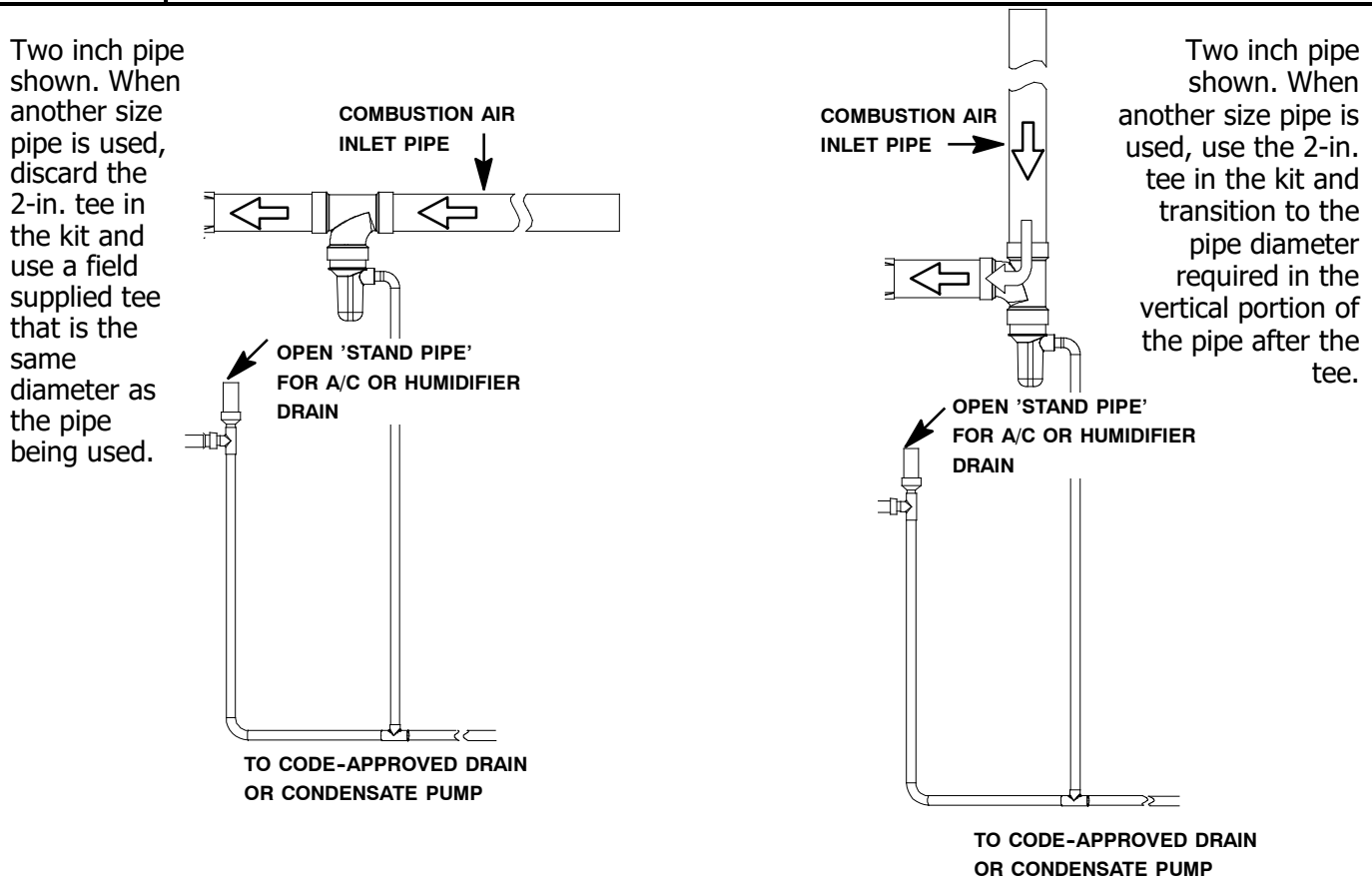

Representative drawing only, some models may vary in appearance

L12F021

INSTALLATION

In this application, ALL vent piping MUST be sloped toward the External Vent Trap Kit. The Internal Drain Trap Plug MUST be installed in the vent/high-pressure side of the collector box trap connection in the furnace. See **Figure 3**. The Trap Kit MUST be installed at the lowest point in the venting system.

⚠ WARNING

CARBON MONOXIDE POISONING HAZARD

Failure to follow these warnings could result in personal injury or death.

The Internal Drain Trap Plug MUST BE APPLIED to the vent side of the collector box trap connection of the furnace when the trap kit is applied to the vent/exhaust piping system. Failure to do this may result in vent gasses being released into the living space.

Failure to use a properly constructed trap(s) or NOT water-priming trap(s) before operating furnace may allow positive pressure vent gases to enter the structure through drain tube. Vent gases contain carbon monoxide which is tasteless and odorless.

⚠ CAUTION

UNIT OPERATION HAZARD

Failure to follow this caution could result in intermittent unit operation.

When the Internal Drain Trap Plug is used, the inducer housing may fill with condensate if any of the vent piping that is external to the furnace is sloped toward the furnace.

Example Trap Kit component installations are shown in **Figure 1**. Install as shown in **Figure 3** through **Figure 7**.

NOTE: This kit is designed for use with 2-in. (50 mm) PVC/ABS DWV vent/exhaust pipe applications. Additional pipe diameters are usable when field-supplied PVC fittings are used with the condensate trap supplied in kit. See **Figure 9** for proper placement of pipe diameter transitions.

NOTICE

Drain pipe and fittings must conform to ANSI standards and ASTM D1785 or D2846. CPVC or PVC cement and primer must conform to ASTM D2564 or F493. See **Table 2**. See section for Special Venting Requirements in the furnace installation instructions Venting section for installations in Canada for pipe, fittings, cement, and primer material requirements for Canadian installations.

⚠ WARNING

FIRE HAZARD

Failure to follow this warning could result in personal injury, death or property damage.

Solvent cements and primers are combustible. Keep away from heat, sparks and open flame. Use only in well-ventilated areas. Avoid breathing in vapor or allowing contact with skin or eyes.

Table 2 — Approved Combustion-Air and Vent Pipe, Fitting and Cement Materials (U.S.A. Installation)

MATERIALS

USA	1. All pipe, fittings, primers*, and solvents* must conform to American National Standards Institute (ANSI) standards and American Society for Testing and Materials (ASTM) standards or ULC S636 where required by code. 2. See Table below for approved materials for use in the U.S.A. 3. ULC S636 vent systems must be composed of pipe, fittings, cements, and primers from the same supplier. 4. Factory accessory concentric vent kits are ULC S636 listed.
CANADA	1. Installation in Canada must conform to the requirements of CAN/CSA B149 code. 2. Vent systems must be composed of pipe, fittings, cements, and primers from the same supplier and listed to ULC S636. 3. Not all materials below may be approved or listed to ULC S636. 4. Royal Pipe and IPEX are approved suppliers of ULC S636 pipe, fittings, cements and primers*. 5. Factory accessory concentric vent kits are ULC S636 listed for use with Royal Pipe and IPEX venting systems

Material	Description	Type	ASTM or ULC Specification			
			Pipe		Solvents/Primers**	Cements
PVC	Pressure Pipe	Schedule 40	D1785	D2466 or D2665	F656	D2564
	DWV	Schedule 40	D1785/D2665			
	Cellular Core	Schedule 40	F891			
	SDR 26	N/A	D2241			
	SDR 21	N/A	D2241			
	IPEX	Schedule 40	ULC S636	ULC S636	ULC S636	ULC S636
	Royal Pipe	Schedule 40	ULC S636	ULC S636	ULC S636	ULC S636
ABS	ABS	Schedule 40	D1527	D2468	Clear Cleaner For ABS†	D2235
	DWV-IPS Sizes	Schedule 40	D2661	D2661		
	Cellular Core DWV-IPS Sizes	Schedule 40	F628			
CPVC	Pressure Pipe	Schedule 40	F441	F438	F656	F493
	SDR	N/A	F442	N/A		
	IPEX	Schedule 40	ULC S636	ULC S636	ULC S636	ULC S636
	Royal Pipe	Schedule 40	ULC S636	ULC S636	ULC S636	ULC S636

*PVC and ABS pipe may use either DWV or pressure rated fittings.

**Colored or tinted solvents or primers must be used where required by code in the USA

†ABS plastic does not require a primer before solvent cementing. A cleaner for ABS is recommended to remove any surface residue. ABS cleaners are not subject to ASTM standards.

Polypropylene	Approved Manufacturer	Solvents Primers	Cements
Poly Pro®	M & G Dura Vent	Not Permitted	Not Permitted

NOTE: Polypropylene vent systems are UL- 1738 and ULC S636 listed and assembled using mechanical fastening systems supplied by the vent manufacturer.

Prepare the Furnace Internal Trap

⚠ WARNING

CARBON MONOXIDE POISONING

Failure to follow these warnings could result in personal injury or death.

The internal drain trap plug MUST BE APPLIED to the vent side of the collector box trap connection of the furnace. Failure to do this may result in vent gases being released into the living space.

Failure to use a properly constructed trap(s) or NOT water-priming trap(s) before operating furnace may allow positive pressure vent gases to enter the structure through drain tube. Vent gases contain carbon monoxide which is tasteless and odorless.

These instructions MUST be followed in order to provide for safe operation of the furnace.

1. Position the furnace in its final operating orientation.
2. Configure the internal furnace drain trap as shown in the furnace installation instructions for that orientation.
3. Once the drain trap configuration is complete as described in the furnace installation instructions, remove the internal furnace drain trap and install the Internal Drain Trap Plug as shown in **Figure 3**, FOR THAT ORIENTATION. Re-install the furnace drain trap.
4. Complete DRY FIT assembly of the field-supplied drainage system drain lines as shown in the appropriate **Figure 4** through **Figure 7**, and as directed in the furnace installation instructions.
5. IF ALLOWED BY LOCAL CODE, it is recommended that a short piece (6-in./15 cm) of clear tubing be applied near the exit of each trap to allow observation of correct drain trap operation.
6. DO NOT cement drain lines at this time. See Drainage System Layout and Installation section.

Figure 3 — **Location of Collector Box Vent Connection Trap Plug (Only used when Trap Kit is used on the Vent Pipe)**

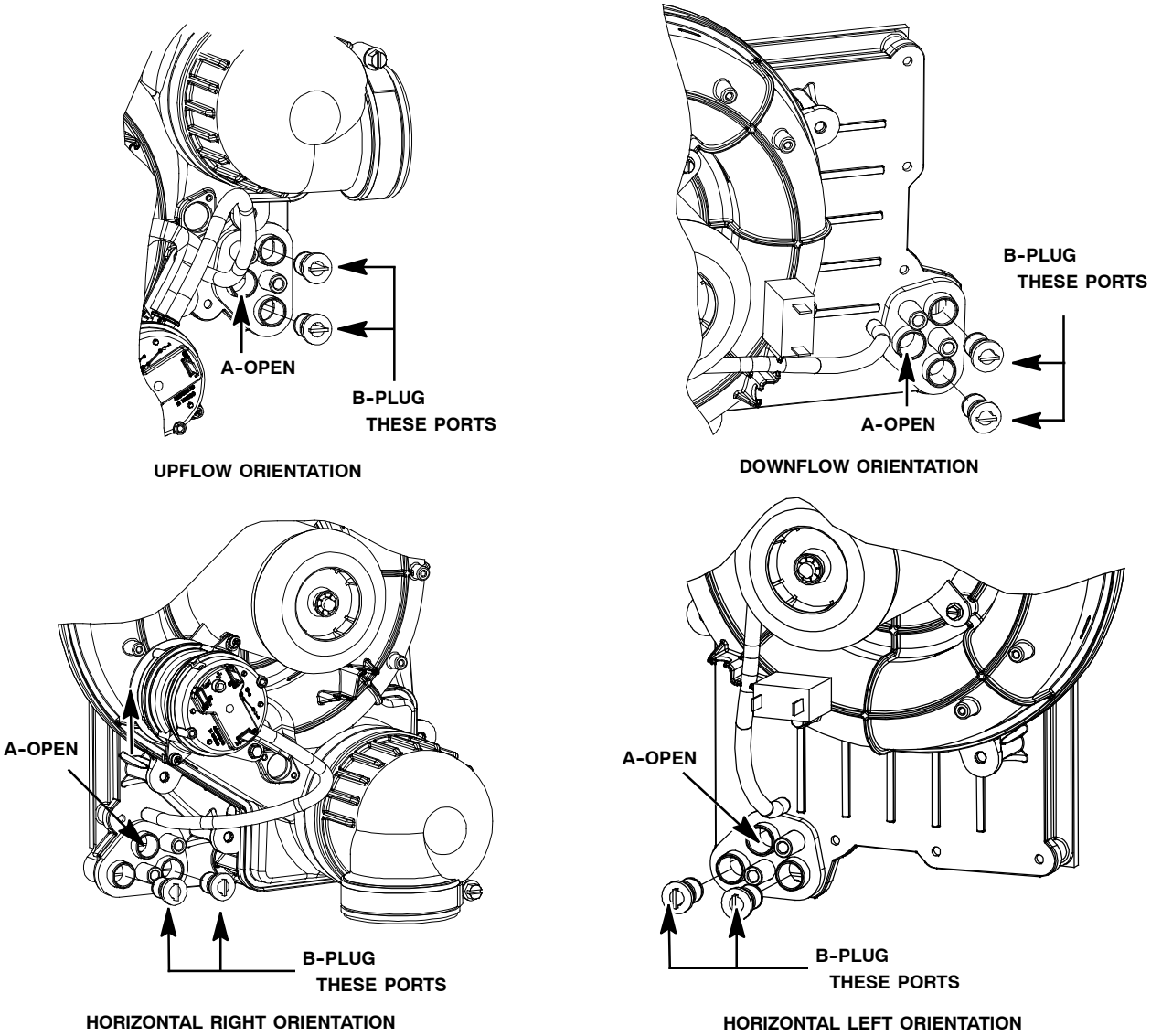

Representative drawing only, some models may vary in appearance

L12F018

NOTE:

A. The lower-most low-side "pivot" port on the collector box is always left open for the internal drain trap.
B. Insert plugs into BOTH of the high-side ports, ONLY when the Trap Kit is applied to the vent pipe.
C. DO NOT plug the trap port when the Trap Kit is used only for the combustion air pipe.

Venting and Combustion Air System Layout and Installation

NOTICE

Follow all vent sizing and selection instructions that are included in the Venting section of the furnace installation instructions.

The Equivalent Length of the Vent/Exhaust Pipe External Trap Kit should be assumed to be 15 feet (5 M) of straight length of PVC/ABS DWV pipe.

NOTE: Slope vent pipes a minimum of 1/4-in. per linear ft. (20mm/meter) toward the Vent/Exhaust Pipe External Trap Kit with no sags between hangers. DO NOT slope the vent pipes toward the furnace when using the trap kit on the vent/exhaust piping system.

⚠ CAUTION

UNIT OPERATIONAL HAZARD

Failure to follow this caution may result in intermittent unit operation.

This kit is intended to be located at the lowest point in the vent system and no more than 24-in. (0.6M) horizontally from where the vent exits the furnace to achieve proper drainage.

NOTE: Slope the combustion-air inlet pipes a minimum of 1/4-in. per linear ft. (20mm/meter) toward the exterior of the structure or insert a second Trap Kit at the lowest point of the combustion-air inlet piping system, within 24-in. (0.6 M) of the furnace.

⚠ CAUTION

UNIT OPERATIONAL HAZARD

Failure to follow this caution may result in intermittent unit operation.

The combustion-air inlet piping system must not have any sections where moisture may collect and block the flow of combustion air through the piping system. If water does block the inlet pipes, the furnace will not operate, or operate intermittently.

Vent Located in Unconditioned Space

⚠ CAUTION

UNIT OPERATIONAL HAZARD

Failure to follow this caution may result in intermittent unit operation.

Unit must not be installed, operated, and then turned off and left in an unoccupied structure during cold weather when temperature drops to 32°F (0°C) and below unless drain traps and drain lines have adequate freeze protection. See Service and Maintenance Instructions for winterizing procedure.

Vent Pipe and Condensate Drain Protection

Freezing condensate in condensate traps and drain lines may cause cracks, and possible water damage may occur. Refer to the Maximum Allowable Exposed Vent Lengths in Unconditioned Space limitations in the furnace installation instructions.

⚠ CAUTION

UNIT OPERATIONAL AND PROPERTY DAMAGE HAZARD

Failure to follow this caution may result in intermittent unit operation, and may cause frozen and/or burst indoor plumbing and property damage.

Caution should be taken to prevent condensate trap(s) and drain line(s) from freezing. Ambient temperatures below 32°F (0°C) may freeze drain pipe and prohibit draining. If freeze protection is required, use a self-regulating, shielded, and waterproof heat tape rated at 3 to 6 watt per ft. (10 to 20 watt per meter) at 120v and 40°F (4°C). See Installation Instructions supplied with accessory condensate trap heater, accessory heat tape, or heat tape manufacturer's recommendations.

Layout and Dry Fit Venting System

Layout and install the venting and/or combustion-air inlet system(s) as follows:

1. Determine the best location for kit components. They should be installed as close to furnace as possible. See **Figure 4** through **Figure 8** for examples.
2. Size the venting system per the instructions provided with the furnace.
3. Dry-fit and assemble vent/exhaust and/or combustion-air inlet piping per the instructions provided with the furnace, except that the Trap Kit is placed at the lowest point of the vent/exhaust and/or combustion-air inlet piping system. See **Figure 4** through **Figure 8** for examples.
4. Cut section of vent/exhaust pipe to attach the trap-tee fitting, using the examples in **Figure 1**, **Figure 2** and **Figure 4** through **Figure 8**.

NOTE: Position vent-tee fitting such that curved portion is as shown in **Figure 1** and **Figure 2** to ensure proper vent/exhaust and/or combustion-air inlet pipe draining.

5. Dry fit the trap-tee fitting into the venting and/or combustion-air inlet piping system.
6. Verify the proper slope of the entire vent/exhaust and/or combustion-air inlet piping system to the trap-tee(s). ALL vent/exhaust piping between the furnace and the Trap Kit should be sloped DOWN and AWAY from the furnace.

⚠ CAUTION

UNIT OPERATION HAZARD

Failure to follow this caution could result in intermittent unit operation.

The inducer housing may fill with condensate if any of the vent piping that is external to the furnace is sloped toward the furnace.

⚠ WARNING

FIRE HAZARD

Failure to follow this warning could result in personal injury, death or property damage.

Solvent cements and primers are combustible. Keep away from heat, sparks and open flame. Use only in well-ventilated areas. Avoid breathing in vapor or allowing contact with skin or eyes.

7. Cement all vent and/or combustion-air inlet piping in place, per the instructions provided with the furnace.

Drainage System Layout and Installation

The furnace, indoor coil, and humidifier drains may be combined and drained together. The indoor coil drain must have an external, field-supplied trap prior to the furnace drain connection, and/or spill into an open stand pipe. See **Figure 1** & **Figure 2**. All drain connections (furnace, indoor coil, or humidifier) must be terminated into an open or vented drain as close to the respective equipment as possible to prevent siphoning of the other equipments' drains. See equipment installation instructions for more information.

Outdoor draining of the furnace is permissible if allowed by local codes. Use the accessory acid neutralizer kit as required by the application (to protect shrubs, etc.), or as required by local codes.

⚠ CAUTION

PERSONAL INJURY OR PROPERTY DAMAGE HAZARD

Failure to follow this caution may result in personal injury or property damage.

Caution should be taken to prevent draining where slippery conditions may cause personal injuries.

Excessive condensate drainage in open areas may cause saturated soil conditions which may result in damage to plants and building foundations.

Condensate is not to be drained onto crawlspace floor from furnace or external trap. Installations must comply with regulations of local building, heating, plumbing, or other codes in effect in area where installation is made.

Complete the installation of the drainage system as follows:

1. Dry fit the external condensate drain trap supplied with the kit into the vent trap-tee fitting. Apply field-supplied fittings as required if the 2-in. (50mm) trap-tee supplied with the kit was not used.
2. Position the external condensate drain trap as required to match to the condensate drainage piping system.
3. Dry fit remaining drainage system piping as shown in **Figure 1**, **Figure 2** and **Figure 4** through **Figure 8**, as appropriate for the specific installation requirements, using field-supplied components.
4. IF ALLOWED BY LOCAL CODE, it is recommended that a short piece of clear tubing (6-in./0.2 M) be applied near the exit of each trap to allow observation of correct drain trap operation.
5. Support all drainage system piping as needed, and in compliance with local codes.
6. Verify that all drainage piping is sloped toward the open drain or condensate sump pump.
7. Cement external condensate drain trap to the trap-tee and connection adapters, if any.
8. Cement all remaining drainage system piping as required.

SYSTEM COMMISSIONING AND CHECKOUT

⚠ WARNING

CARBON MONOXIDE POISONING HAZARD

Failure to follow these warnings could result in personal injury or death.

The Internal Drain Trap Plug MUST BE APPLIED to the vent side of the collector box trap connection of the furnace when the trap kit is applied to the vent/exhaust piping system. Failure to do this may result in vent gasses being released into the living space.

Failure to use a properly constructed trap(s) or NOT water-priming trap(s) before operating furnace may allow positive pressure vent gases to enter the structure through drain tube. Vent gases contain carbon monoxide which is tasteless and odorless.

Follow these steps to verify proper operation of the trap and drainage system:

1. IF ALLOWED BY LOCAL CODE, it is recommended that a short piece of clear tubing (6-in./15 cm) be applied near the exit of each trap to allow observation of correct drain trap operation.
2. Prime the furnace internal condensate drainage trap per the furnace installation instructions. Collect or observe excess priming water at the end of the drainage piping system to verify that the trap is fully primed.
3. Prime the Trap Kit connected to the venting system by slowly pouring at least 32-oz. (1 liter) of water into the vent termination. Collect or observe excess priming water at the end of the drainage piping system to verify that the trap is fully primed.
4. Prime the Trap Kit connected to the combustion-air inlet piping system (IF USED) by slowly pouring at least 32-oz. (1 liter) of water into the combustion air inlet at the vent termination. Collect or observe excess priming water at the exit of the drainage piping system to verify that the trap is fully primed.
5. Once the furnace has been completely installed per the instructions supplied with the furnace, run the furnace for at least one hour to verify that all drainage systems are operating properly. Collect or observe condensate drainage at the exit of the drainage piping system to verify that the traps are fully primed and that the drain system is not blocked.
6. If the clear tubing has been applied to the drainage system, observe that EACH trap in the system is draining properly. NOTE that the combustion-air inlet piping system will likely NOT produce condensate.

⚠ WARNING

CARBON MONOXIDE POISONING HAZARD

Failure to follow these warnings could result in personal injury or death.

If water vapor (fog) rather than liquid condensate is observed exiting the drain port any of the traps, that MAY be an indication that combustion gasses are escaping through the drain system.

RECHECK that all traps are properly water-primed.

RECHECK that the Internal Drain Trap Plug is properly inserted into the internal condensate drain trap in the furnace. See **Figure 3**.

DO NOT operate the furnace until it is verified that all condensate drain traps are operating properly.

Failure to use a properly constructed trap(s) or NOT water-priming trap(s) before operating furnace may allow positive pressure vent gases to enter the structure through drain tube. Vent gases contain carbon monoxide which is tasteless and odorless.

7. Listen for gurgling noises in the venting and drainage systems. This is an indication that there are dips in the piping system, or that the traps are not operating properly. Correct the conditions as needed.

⚠ CAUTION

UNIT OPERATION HAZARD

Failure to follow this caution could result in intermittent unit operation.

When the Internal Drain Trap Plug is used, the inducer housing may fill with condensate if any of the vent piping that is external to the furnace is sloped toward the furnace.

⚠ WARNING

FIRE HAZARD

Failure to follow this warning could result in personal injury, death or property damage.

Solvent cements and primers are combustible. Keep away from heat, sparks and open flame. Use only in well-ventilated areas. Avoid breathing in vapor or allowing contact with skin or eyes.

8. If there are water gurgling or sloshing sounds coming from the inducer housing, this is an indication that not all of the vent piping is sloped AWAY from the furnace and toward the Trap Kit. Correct the conditions as needed.
9. Shut down the furnace.
10. Once all drainage checks and verifications have been made, return the furnace to its normal operating condition.
11. Perform the venting system checklist as shown in the following WARNING box.

⚠ WARNING

CARBON MONOXIDE POISONING HAZARD

Failure to follow the steps outlined below for each appliance connected to the venting system being placed into operation could result in carbon monoxide poisoning or death.

The following steps shall be followed for each appliance connected to the venting system being placed into operation, while all other appliances connected to the venting system are not in operation:

1. Seal any unused openings in venting system.
2. Inspect the venting system for proper size and horizontal pitch, as required in the National Fuel Gas Code, ANSIZ223.1/NFPA 54 or the CSA B149.1 Natural Gas and Propane Installation Code and these instructions. Determine that there is no blockage or restriction, leakage, corrosion and other deficiencies, which could cause an unsafe condition.
3. As far as practical, close all building doors and windows and all doors between the space in which the appliance(s) connected to the venting system are located and other spaces of the building.
4. Close fireplace dampers.
5. Turn on clothes dryers and any appliance not connected to the venting system. Turn on any exhaust fans, such as range hoods and bathroom exhausts, so they are operating at maximum speed. Do not operate a summer exhaust fan.
6. Follow the lighting instructions. Place the appliance being inspected into operation. Adjust the thermostat so appliance is operating continuously.
7. Test for spillage from draft hood equipped appliances at the draft hood relief opening after 5 minutes of main burner operation. Use the flame of a match or candle.
8. If improper venting is observed during any of the above tests, the venting system must be corrected in accordance with the National Fuel Gas Code, ANSIZ223.1/NFPA 54 and/or CSA B149.1 Natural Gas and Propane Installation Code.
9. After it has been determined that each appliance connected to the venting system properly vents when tested as outlined above, return doors, windows, exhaust fans, fireplace dampers and any other gas-fired burning appliance to their previous conditions of use.

Figure 4	Vent Located Below Floor with Upflow Furnace and Side Venting

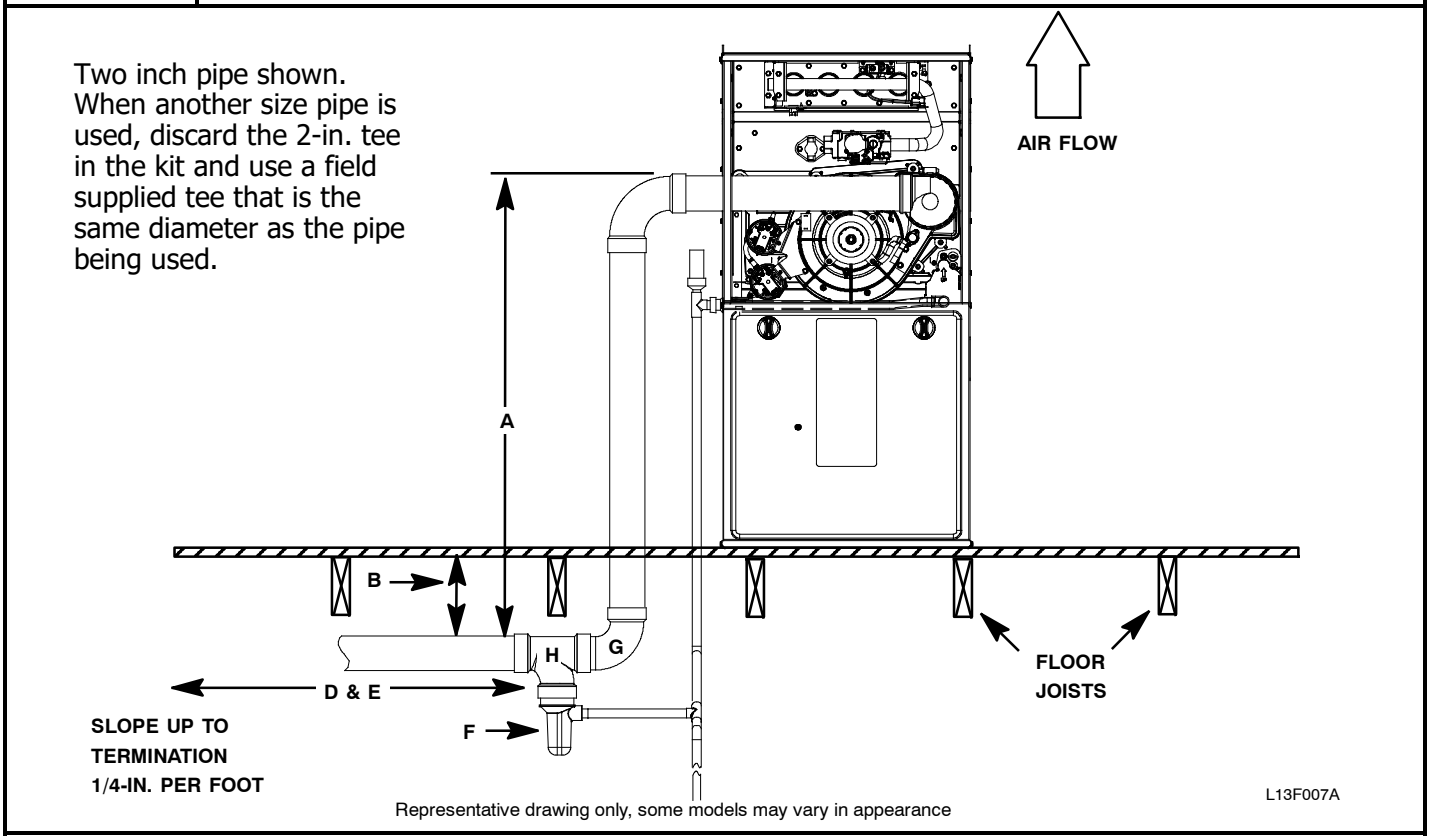

Representative drawing only, some models may vary in appearance

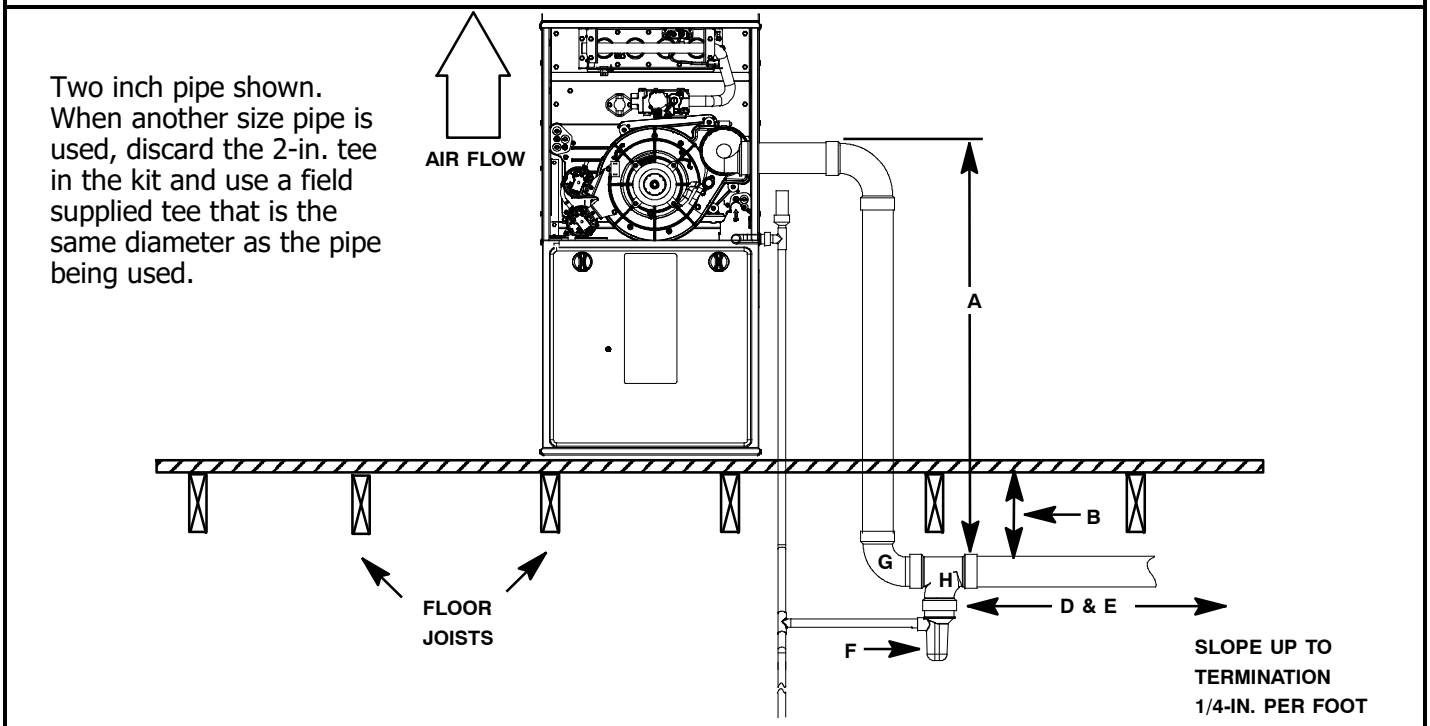

CONFIGURATION FOR VENT AND/OR COMBUSTION AIR PIPIING
(See NOTES in Figure 1)

Representative drawing only, some models may vary in appearance

Figure 5	Vent Located Below Floor with Downflow Furnace and Side Venting

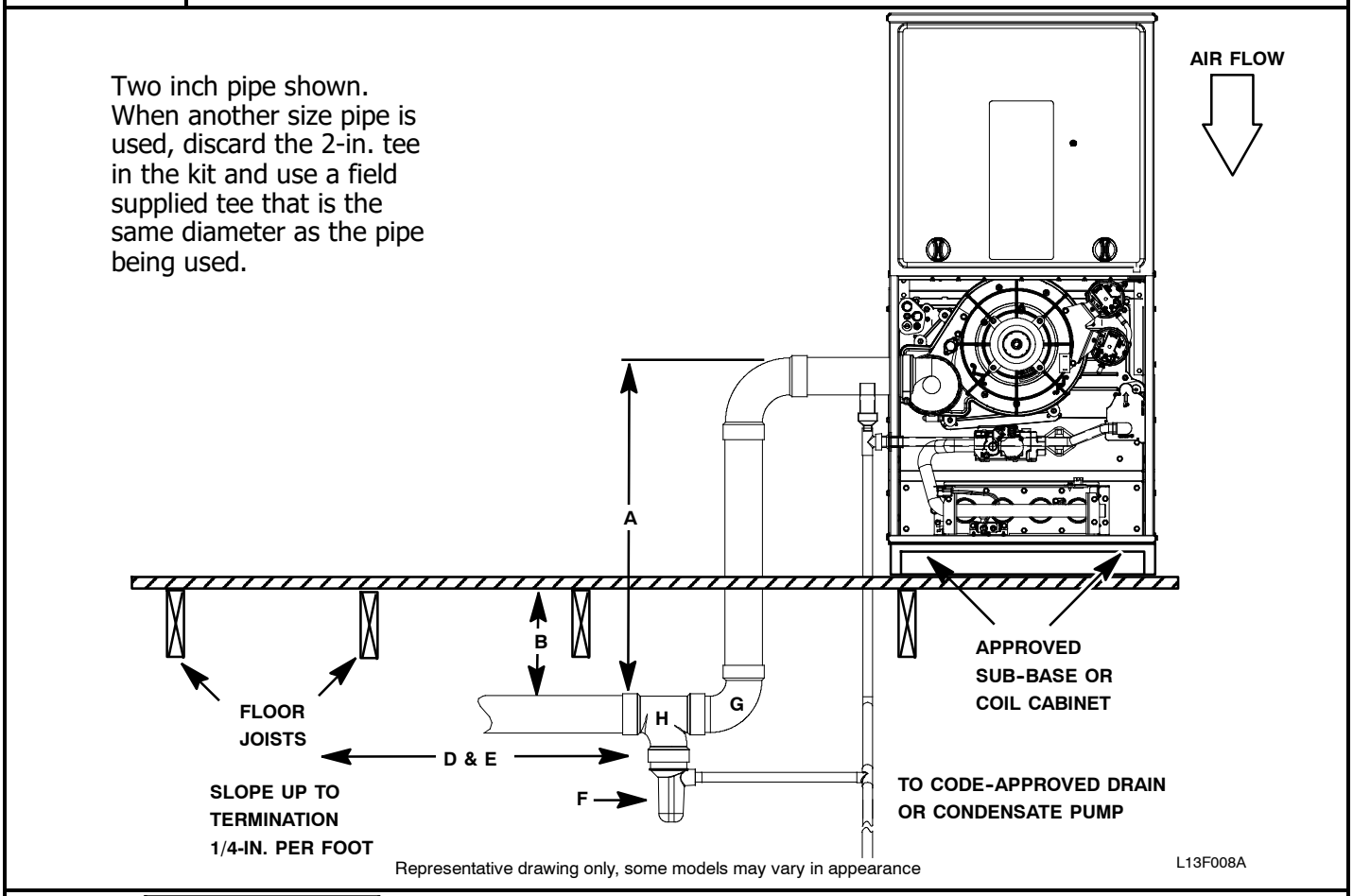

Representative drawing only, some models may vary in appearance

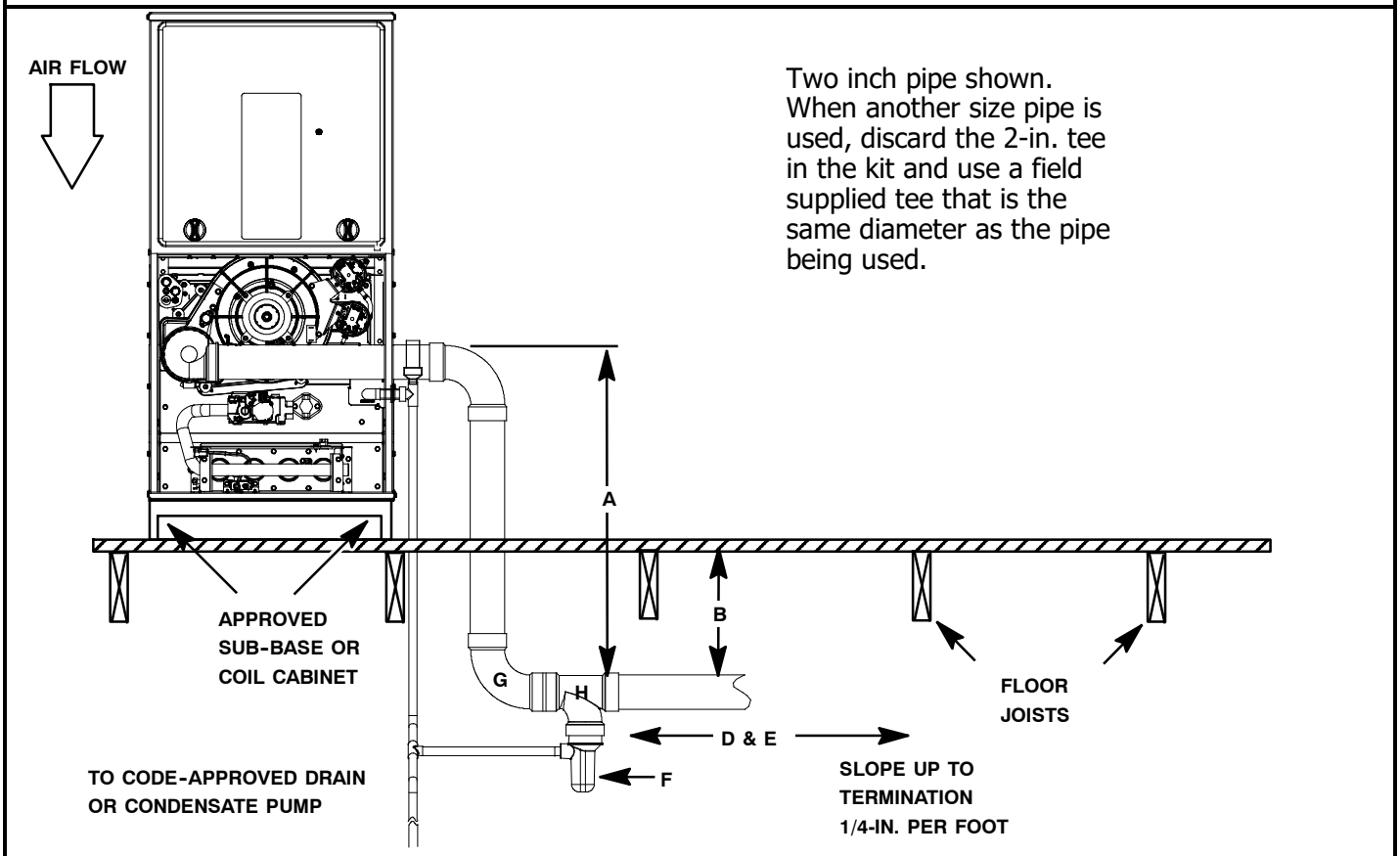

CONFIGURATION FOR VENT AND/OR COMBUSTION AIR PIPIING
(See NOTES in Figure 1)

Representative drawing only, some models may vary in appearance

Figure 6 | **Vent Located Below Floor with Upflow Furnace and Through-the-Cabinet Venting**

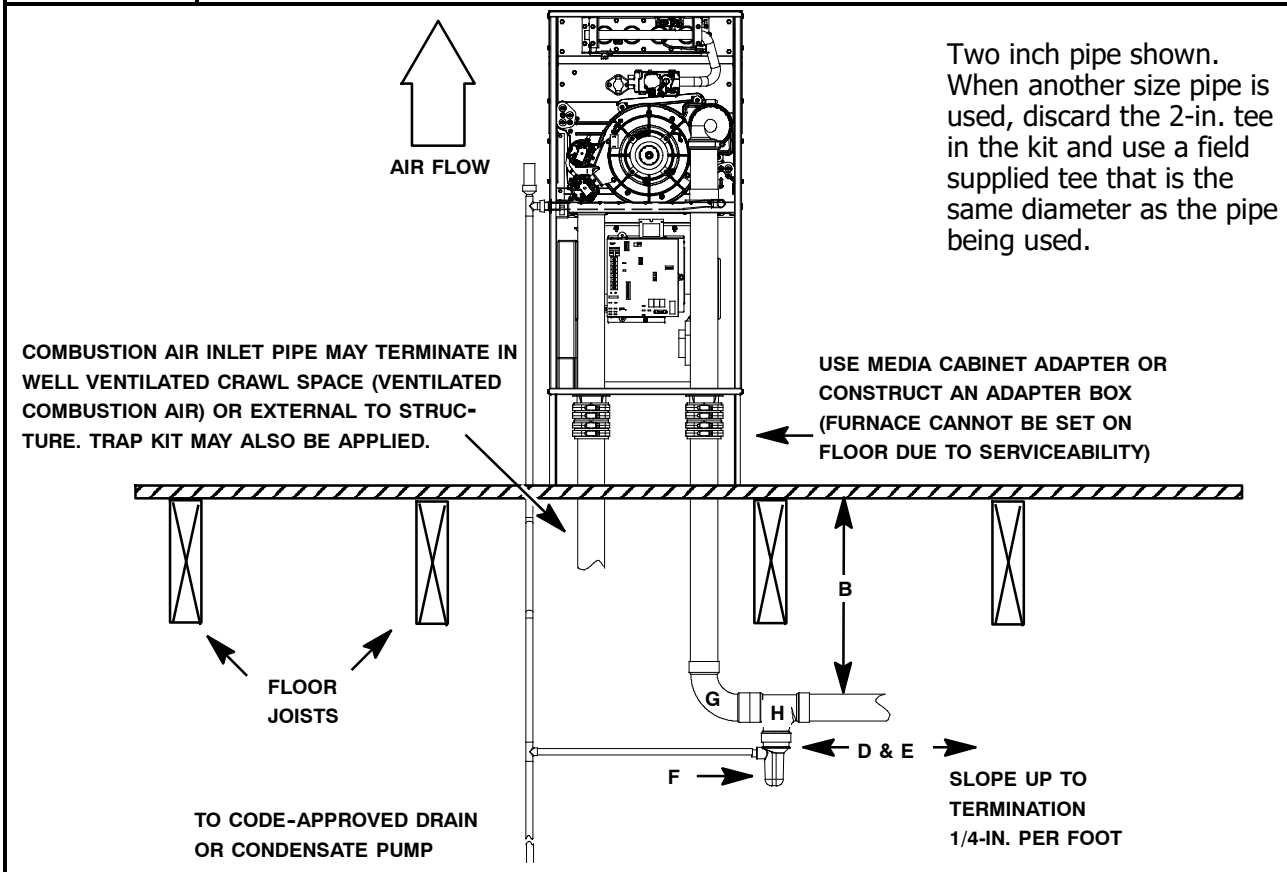

CONFIGURATION FOR VENT AND/OR COMBUSTION AIR PIPIING
(See NOTES in Figure 1)

Representative drawing only, some models may vary in appearance

L13F009

Figure 7 | **Vent Located Below Horizontal Furnace**

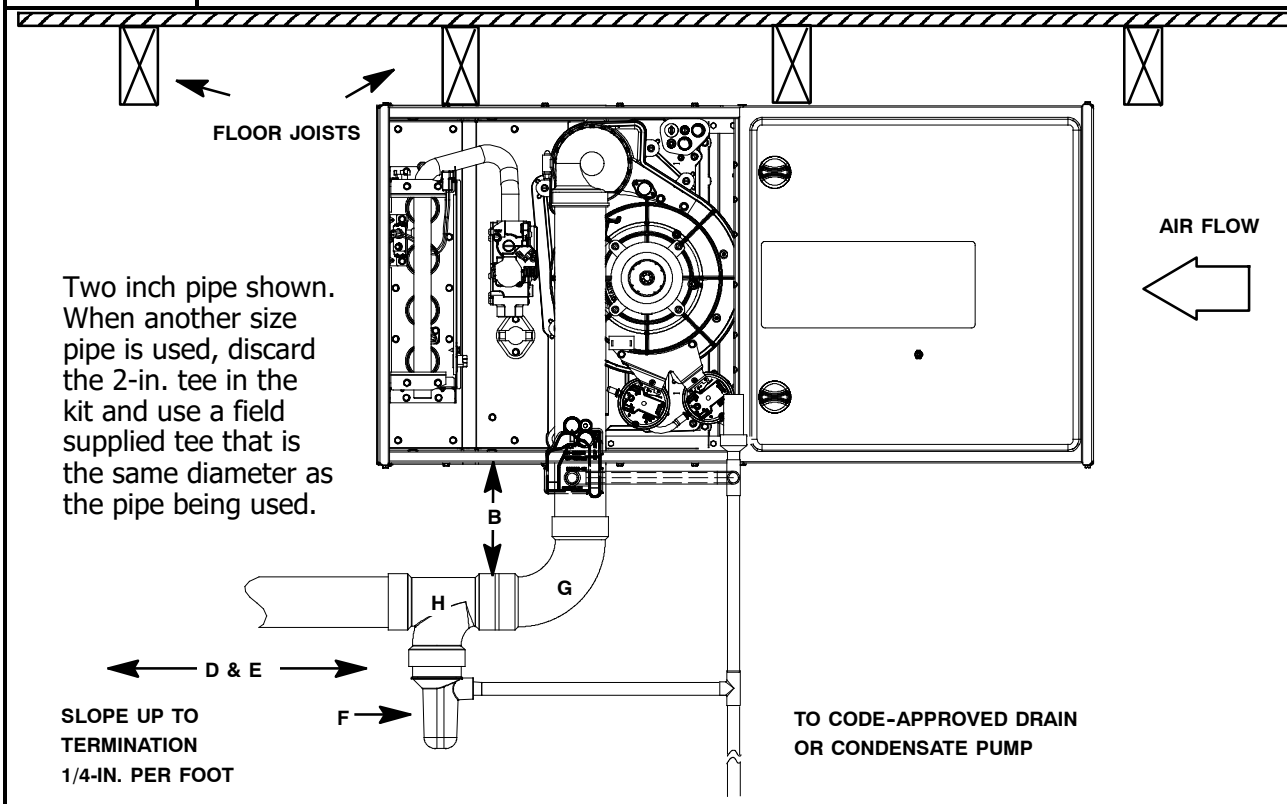

CONFIGURATION FOR VENT AND/OR COMBUSTION AIR PIPIING
(See NOTES in Figure 1)

Representative drawing only, some models may vary in appearance

L13F010

Figure 8	Application of Trap Kit to Combustion Air Pipe Located Above Furnace

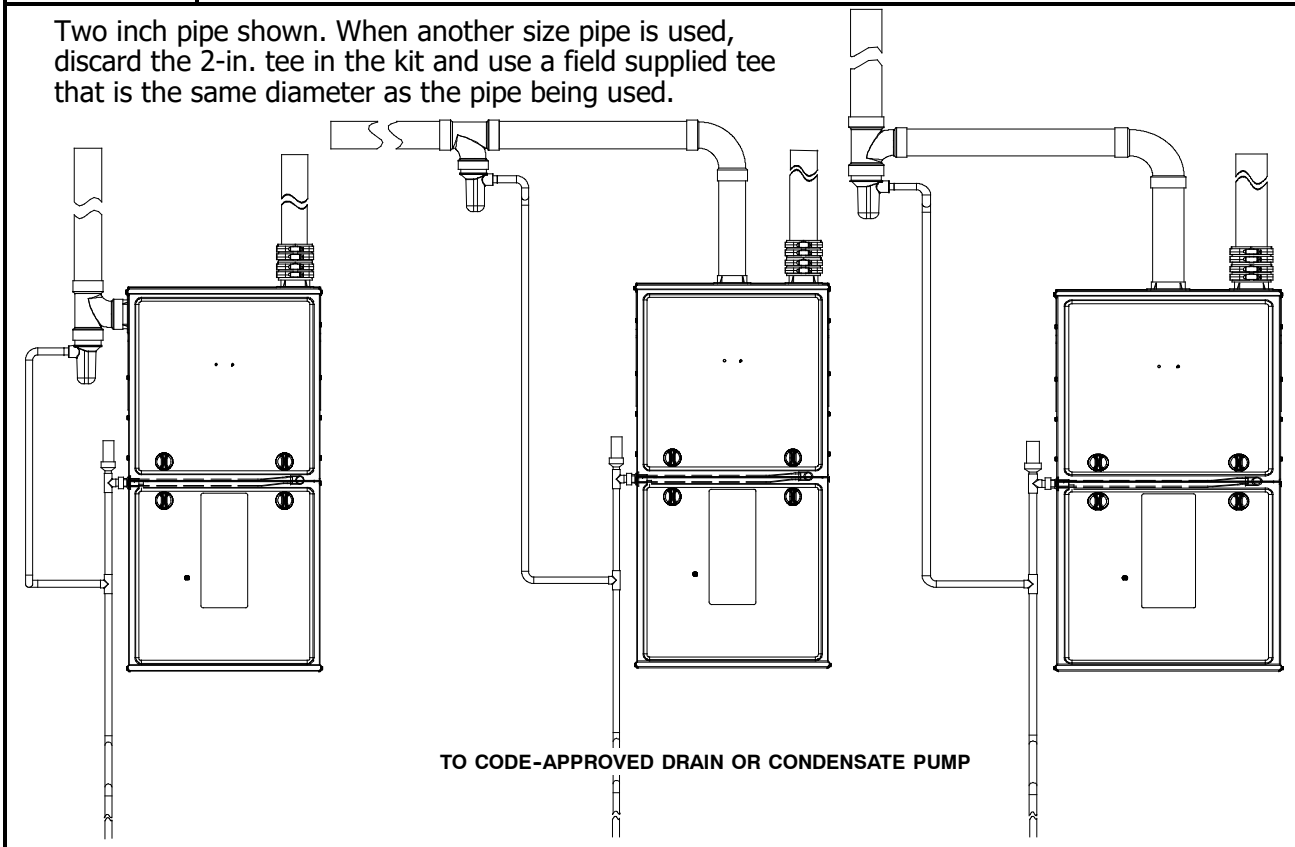

Representative drawing only, some models may vary in appearance

L12F028

Figure 9	Combustion Air and Vent Pipe Diameter Transition Location and Elbow Configuration

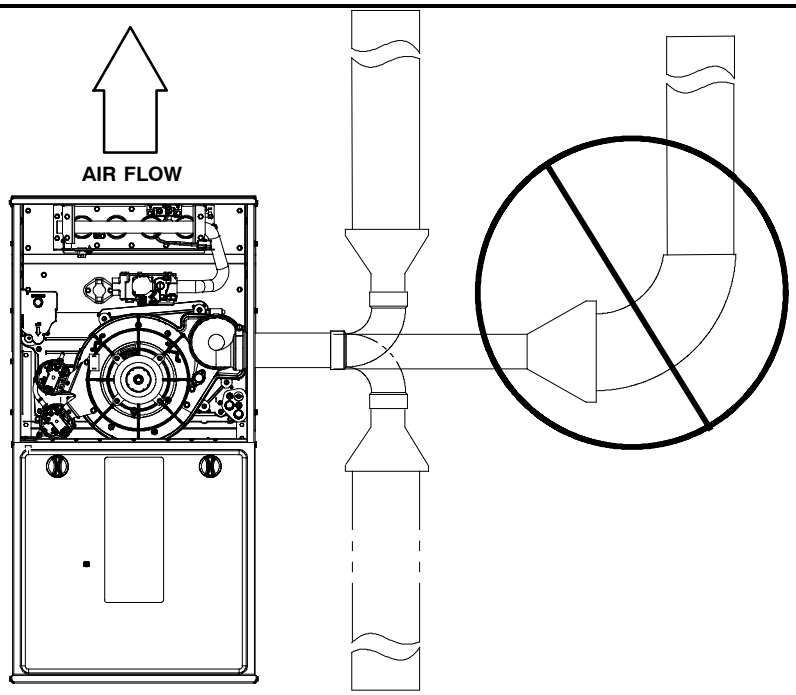

Representative drawing only, some models may vary in appearance

L12F029

Copyright 2019 International Comfort Products
Lewisburg, TN 37091 USA

Specifications subject to change without notice.