Comfortmaker®
Air Conditioning & Heating

PHD4
Product Specifications

14 SEER, 12 EER, 8.0 HSPF, PACKAGE HEAT PUMP, 2.5 to 5 TONS
208/230−3−60, 460−3−60

REFRIGERATION CIRCUIT

- Environmentally sound R-410A refrigerant
- Copper tube/aluminum fin condenser and evaporator coils
- Scroll compressor standard on all models
- Short-cycling protection for the compressor is built into the defrost control board
- Dehumidification mode (airflow reduction) on all models

EASY TO INSTALL AND SERVICE

- Installs easily on a rooftop or at ground level
- Easy three-panel accessibility for maintenance and installation
- Easily converts to down discharge applications
- Combination electric heating and cooling

BUILT TO LAST

- Hail Guard (3/8" spacing) wire grilles standard on all models
- Direct drive high efficiency ECM blower motor on all models
- Pre-painted steel cabinet
- Vertical condenser fan discharge
- Full perimeter steel base rails
- High and low pressure switches provide added reliability for the compressor

WARRANTY

- 5 year compressor limited warranty
- 1 year parts limited warranty

c UL US LISTED

ENERGY STAR PARTNER

As an Energy Star® Partner, International Comfort Products has determined that this product meets the ENERGY STAR® guidelines for energy efficiency.

AHRI CERTIFIED™ www.ahridirectory.org

Use of the AHRI Certified TM Mark indicates a manufacturer's participation in the program. For verification of certification for individual products, go to www.ahridirectory.org .

UNIT PERFORMANCE DATA

Model Number	COOLING Capacity BTU/h	COOLING SEER	COOLING EER	HEATING Capacity BTU/h	HEATING HSPF	Unit Dimensions Height x Width x Depth in (mm)	Operating Weight lbs (kg)
PHD430000H000D	28,600	14.2	12.0	29,000	8.0	$45^7/_8$ x $48^3/_{16}$ x $32^5/_8$ (1165 x 1224 x 829)	340 (154)
PHD436000*000D	35,800	14.5	12.0	34,800	8.0	$43^7/_8$ x $48^3/_{16}$ x $44^1/_8$ (1116 x 1224 x 1123)	418 (190)
PHD442000*000D	40,500	14.5	12.0	40,500	8.0	$49^7/_8$ x $48^3/_{16}$ x $44^1/_8$ (1266 x 1224 x 1123)	464 (210)
PHD448000*000D	46,500	14.5	12.0	45,500	8.0	$49^7/_8$ x $48^3/_{16}$ x $44^1/_8$ (1266 x 1224 x 1123)	452 (205)
PHD460000*000D	57,000	14.5	12.0	60,000	8.0	$53^7/_8$ x $48^3/_{16}$ x $44^1/_8$ (1368 x 1224 x 1123)	506 (230)

* H = 208/230-3-60, L = 460-3-60

MODEL NOMENCLATURE

MODEL SERIES	1	2	3	4	5,6	7,8,9	10	11,12	13	14	15
	P	H	D	4	36	000	H	00	0	D	1

P = Package

H = Heat Pump

D = Standard

TIER

3 = 13

4 = 14

SEER

30 = 30,000 BTUH = 2.5 Tons

36 = 36,000 BTUH = 3 Tons

42 = 42,000 BTUH = 3.5 Tons

48 = 48,000 BTUH = 4 Tons

60 = 60,000 BTUH = 5 Tons

NOMINAL COOLING CAPACITY

000 = no factory heat

NOMINAL HEATING BTUH (input)

H = 208/230−3−60

L = 460−3−60

VOLTAGE

00 = No options

FACTORY INSTALLED OPTIONS

0 = Standard

FEATURE CODE

Sales Model Digit

Engineering Digit

AHRI* CAPACITIES

COOLING CAPACITIES AND EFFICIENCIES − PHD4

PHD4	NOMINAL TONS	STANDARD CFM	COOLING CAPACITY	EER	SEER
30	2.5	1000	28,600	12.0	14.2
36	3	1200	35,800	12.0	14.5
42	3.5	1400	40,500	12.0	14.5
48	4	1600	46,500	12.0	14.5
60	5	1750	57,000	12.0	14.5

HEAT PUMP HEATING CAPACITIES AND EFFICIENCIES − PHD4

PHD4	HEATING CAPACITY (BTUH) @ 47 °F (8.3 °C)	COP @ 47 °F (8.3 °C)	HEATING CAPACITY (BTUH) @ 17 °F (−8.3 °C)	COP @ 17°F (−8.3 °C)	HSPF
30	29,600	3.5	15400	2.2	8.0
36	35,800	3.5	19800	2.2	8.0
42	41,500	3.4	23000	2.3	8.0
48	45,500	3.4	26000	2.3	8.0
60	59,000	3.5	32000	2.3	8.0

LEGEND
dB−Sound Levels (decibels)
db−Dry Bulb
SEER−Seasonal Energy Efficiency Ratio
wb−Wet Bulb
COP−Coefficient of Performance
HSPF−Heating Season Performance Factor
* Air Conditioning, Heating, & Refrigeration Institute.
**At "A" conditions−80°F (26.7°C) indoor db/67°F (19.4°C) indoor wb & 95°F (35°C) outdoor db.
† Rated in accordance with U.S. Government DOE Department of Energy) test procedures and/or ARI Standards 210/240.

Notes:
1. Ratings are net values, reflecting the effects of circulating fan heat. Ratings are based on:
Cooling Standard: 80°F (26.7°C) db, 67°F (19.4°C) wb indoor entering−air temperature and 95°F (35°C) db outdoor entering−air temperature.
2. Before purchasing this appliance, read important energy cost and efficiency information available from your retailer.

ELECTRICAL DATA − PHD4

MODEL	V-PH-HZ	RANGE MIN	RANGE MAX	RLA	LRA	OFM FLA	IFM FLA	NOMINAL kW	FLA	MCA	MOCP
PHD430	208/230-3-60	197	253	9.0	58	1.2	4.1	-/-	-/-	16.6	25
								3.8/5	10.4/12	29.6/31.8	30/35
								7.5/10	20.8/24.1	42.6/46.7	45/50
								11.3/15	31.2/36.1	55.6/61.7	60/70
PHD436	208/230-3-60	197	253	11.5	73	1.2	6.0	-/-	-/-	21.6	30
								3.8/5	10.4/12	34.6/36.6	35/40
								7.5/10	20.8/24.1	47.6/51.7	50/60
								11.3/15	31.2/36.1	60.6/66.7	70/70
	460-3-60	414	506	5.8	38	0.5	3.0	-/-	-/-	10.8	15
								5	6	18.3	20
								10	12	25.8	30
								15	18	33.3	35
PHD442	208/230-3-60	197	253	13.5	88	1.2	6.0	-/-	-/-	24.1	35
								3.8/5	10.4/12	37.1/39.1	40/40
								7.5/10	20.8/24.1	50.1/54.2	60/60
								11.3/15	31.2/36.1	63.1/69.2	70/70
								15/20	41.4/47.9	75.8/84	80/90
	460-3-60	414	506	6.1	44	0.5	3.0	-/-	-/-	11.1	15
								5	6	18.6	20
								10	12	26.1	30
								15	18	33.6	35
								20	24.1	41.3	45
PHD448	208/230-3-60	197	253	16.0	83	1.2	7.6	-/-	-/-	28.8	40
								3.8/5	10.4/12	41.8/43.8	45/45
								7.5/10	20.8/24.1	54.8/58.9	60/60
								11.3/15	31.2/36.1	67.8/73.9	70/80
								15/20	41.4/47.9	80.6/88.7	90/90
	460-3-60	414	506	7.2	41	0.5	3.8	-/-	-/-	13.3	20
								5	6	20.8	25
								10	12	28.3	30
								15	18	35.8	40
								20	24.1	43.4	45
PHD460	208/230-3-60	197	253	19.9	110	1.2	7.6	-/-	-/-	33.7	50
								3.8/5	10.4/12	46.7/48.7	50/50
								7.5/10	20.8/24.1	59.7/63.8	60/70
								11.3/15	31.2/36.1	72.7/78.8	80/80
								15/19.91	41.4/47.9	85.4/93.6	90/100
	460-3-60	414	506	8.6	52	0.6	3.8	-/-	-/-	15.2	20
								5	6	22.7	25
								10	12	30.2	35
								15	18	37.7	40
								20	24.1	45.3	50

See Legend and Notes.

LEGEND

FLA -- Full Load Amps
LRA -- Locked Rotor Amps
MCA -- Minimum Circuit Amps
MOCP -- Maximum Overcurrent Protection
RLA -- Rated Load Amps

NOTES:

1. In compliance with NEC (National Electrical Code) requirements for multimotor and combination load equipment (refer to NEC Articles 430 and 440), the overcurrent protective device for the unit shall be Power Supply fuse. The CGA (Canadian Gas Association) units may be fuse or circuit breaker.
2. Minimum wire size is based on 60 C copper wire. If other than 60 C wire is used, or if length exceeds wire length in table, determine size from NEC.
3. Unbalanced 3-Phase Supply Voltage
   Never operate a motor where a phase imbalance in supply voltage is greater than 2%. Use the following formula to determine the percentage of voltage imbalance

   % Voltage imbalance

   $$= 100 \times \frac{\text{max voltage deviation from average voltage}}{\text{average voltage}}$$

EXAMPLE: Supply voltage is 230-3-60.

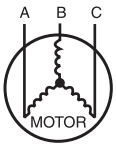

AB = 228 v
BC = 231 v
AC = 227 v

$$\text{Average Voltage} = \frac{228 + 231 + 227}{3} = \frac{686}{3} = 229$$

Determine maximum deviation from average voltage.
(AB) 229 - 228 = 1 v
(BC) 231 - 229 = 2 v
(AC) 229 - 227 = 2 v

Maximum deviation is 2 v.

Determine percent of voltage imbalance

$$\% \text{ Voltage Imbalance} = 100 \times \frac{2}{229} = 0.8\%$$

This amount of phase imbalance is satisfactory as it is below the maximum allowable 2%.

IMPORTANT: If the supply voltage phase imbalance is more than 2%, contact your local electric utility company immediately.

PHYSICAL DATA – UNIT PHD4					
UNIT SIZE	**30**	**36**	**42**	**48**	**60**
NOMINAL CAPACITY (ton)	2.5	3	3.5	4	5
Shipping Weight (lb) **(kg)**	346 157	426 193	472 214	460 209	506 230
Compressor Quantity	1				
Type	Scroll				
Refrigerant	R-410A				
Refrigerant Quantity (lb) **Quantity (kg)**	10.3 4.7	9.9 4.5	11.3 5.1	12.5 5.7	15.2 6.9
Refrigerant Metering Device	Indoor TXV, Outdoor Dual Orifice				
Orifice OD (in) **(mm)**	0.037 (2) 0.94 (2)	0.038 (2) 0.97 (2)	0.040 (2) 1.02 (2)	0.040 (2) 1.02 (2)	0.049 (2) 1.24 (2)
Outdoor Coil **Rows...Fins/in,** **face area (sq. ft.)**	 2...21 13.6	 2...21 13.6	 2...21 17.5	 2...21 17.5	 2...21 23.3
Outdoor Fan **Nominal Airflow (cfm)** **Diameter (in.)** **Diameter (mm)** **Motor hp (rpm)**	 2700 24 610 1/5 (810)	 3100 26 660 1/5 (810)	 3100 26 660 1/5 (810)	 3100 26 660 1/5 (810)	 3500 26 660 1/4 (810)
Indoor Coil **Rows...Fins/in,** **face area (sq. ft.)**	 3...17 3.7	 3...17 4.7	 3...17 4.7	 3...17 5.6	 3...17 5.6
Indoor Blower **Nominal Airflow (cfm)** **Size (in.)** **Size (mm)** **Motor hp (rpm)**	 1000 10 x 10 254 x 254 1/2	 1200 11 x 10 279 x 254 3/4	 1400 11 x 10 279 x 254 3/4	 1600 11 x 10 279 x 254 1	 1750 11 x 10 279 x 254 1
High Pressure Switch (psig) **Cutout** **Reset (Auto)**	 650 +/- 15 420 +/- 25				
Loss-of-Charge/Low Pressure Switch (psig) **Cutout** **Reset (Auto)**	 20 +/- 5 45 +/- 10				
Return Air Filters **disposable (in)** **(mm)**	 20x24x1 508x610x25	 24x30x1 610x762x25		 24x36x1 610x914x25	

*Required filter sizes shown are based on the larger of the AHRI (Air conditioning, Heating, and Refrigeration Institute) rated cooling airflow or the heating airflow velocity of 300 ft/minute for throwaway type or 450 ft/minute for high−capacity type. Air filter pressure drop for non−standard filters must not exceed 0.08 IN. W.C.

† If using accessory filter rack refer to the filter rack installation instructions for correct filter size and quantity.

A−WEIGHTED SOUND POWER LEVEL (dBA)

MODEL PHD4	STANDARD RATING (dBA)	TYPICAL OCTAVE BAND SPECTRUM (dBA) (without tone adjustment)						
		125	250	500	1000	2000	4000	8000
30	72	61.5	62.5	66.0	66.0	63.0	57.5	50.5
36	78	62.0	69.0	72.5	73.0	70.5	67.5	62.0
42	75	62.5	62.5	68.5	70.0	67.0	62.0	58.5
48	78	70.5	69.5	71.0	72.5	69.5	66.0	59.5
60	79	69.0	69.0	71.5	74.0	72.0	67.5	59.5

NOTE: Tested in accordance with AHRI Standard 270 (not listed in AHRI).

DRY COIL AIR DELIVERY* − HORIZONTAL AND DOWNFLOW DISCHARGE − UNIT PHD430−60

Unit	Motor Speed	Wire Color		External Static Pressure (in W.C)								
				0.1	0.2	0.3	0.4	0.5	0.6	0.7	0.8	0.9
PHD430	Low	Blue	cfm	741	638	547	415	---	---	---	---	---
	Med-Low	Pink	cfm	973	887	823	733	665	538	451	---	---
	Medium	Red	cfm	1088	1023	954	881	800	723	658	563	461
	Med-High[1]	Orange	cfm	1140	1064	996	915	840	758	687	564	480
	High	Black	cfm	1202	1140	1082	1015	961	881	810	732	631
PHD436	Low	Blue	cfm	1176	1121	1079	1019	974	920	877	826	754
	Med-Low	Pink	cfm	1295	1234	1182	1126	1075	1016	955	898	857
	Medium[1]	Red	cfm	1345	1282	1235	1194	1140	1095	1027	974	921
	Med-High	Orange	cfm	1505	1452	1413	1358	1323	1282	1234	1169	1130
	High	Black	cfm	1705	1643	1607	1568	1518	1483	1448	1404	1360
PHD442	Low	Blue	cfm	1295	1234	1182	1126	1075	1016	955	898	857
	Med-Low	Pink	cfm	1345	1282	1235	1194	1140	1095	1027	974	921
	Medium	Red	cfm	1505	1452	1413	1358	1323	1282	1234	1169	1130
	Med-High[1]	Orange	cfm	1545	1492	1449	1411	1362	1313	1278	1231	1188
	High	Black	cfm	1705	1643	1607	1568	1518	1483	1448	1404	1360
PHD448	Low	Blue	cfm	1430	1374	1327	1267	1223	1176	1127	1061	1016
	Med-Low	Pink	cfm	1445	1389	1341	1281	1236	1189	1139	1072	1027
	Medium[1]	Red	cfm	1678	1635	1602	1558	1513	1474	1438	1404	1349
	Med-High	Orange	cfm	2131	2088	2065	2013	1982	1941	1888	1860	1785
	High	Black	cfm	2461	2409	2339	2286	2192	2140	2062	1968	1874
PHD460	Low	Blue	cfm	1445	1389	1341	1281	1236	1189	1139	1072	1027
	Med-Low	Pink	cfm	1678	1635	1602	1558	1513	1474	1438	1404	1349
	Medium[1]	Red	cfm	1962	1915	1880	1843	1794	1753	1711	1675	1628
	Med-High	Orange	cfm	2131	2088	2065	2013	1982	1941	1888	1860	1785
	High	Black	cfm	2461	2409	2339	2286	2192	2140	2062	1968	1874

* Air delivery values are without air filter and are for dry coil (See PHD4−A Wet Coil Pressure Drop Table).

[1] Factory−shipped cooling/heat pump heating speed

NOTE: For horizontal applications deduct field−supplied air filter pressure drop and wet coil pressure drop to obtain external static pressure available for ducting. For downflow applications see Wet Coil Air Delivery table for available static including wet coil, 1−in. (25 mm) filter and economizer.

Shaded areas indicate speed/static combinations that are not permitted for dehumidification speed.

HORIZONTAL WET COIL PRESSURE DROP (in wc)

UNIT SIZE	STANDARD CFM (S.C.F.M)															
	500	600	700	800	900	1000	1100	1200	1300	1400	1500	1600	1700	1800	1900	2000
30				0.12	0.15	0.19	0.23	0.27								
36						0.07	0.11	0.18	0.26	0.35						
42								0.04	0.07	0.1	0.15	0.21				
48										0.11	0.14	0.17	0.22	0.28		
60												0.1	0.17	0.23	0.31	0.36

WET COIL AIR DELIVERY (CFM) − DOWNFLOW − HIGH SPEED WITH 1−IN. (25 MM) FILTER AND ECONOMIZER

UNIT SIZE	EXTERNAL STATIC PRESSURE (in. W.C.)									
	0.1	0.2	0.3	0.4	0.5	0.6	0.7	0.8	0.9	1.0
36, 42	1612	1569	1527	1481	1451	1393	1351	1317	1278	1242
48	2298	2239	2180	2110	2044	1951	1862	1777	1697	1591
60	2000	1926	1825	1820	1759	1705	1634	1496	1412	1328

HORIZONTAL FILTER PRESSURE DROP TABLE (in wc)

FILTER SIZE in. (mm)	STANDARD CFM (S.C.F.M)														
	500	600	700	800	900	1000	1100	1200	1300	1400	1500	1600	1700	1800	1900
20X20X1 (508X508X25)	0.05	0.07	0.08	0.1	0.12	0.13	0.14	0.15	—	—	—	—	—	—	—
20X24X1 (508X610x25)	—	—	—	.09	.10	.11	.13	.14	.15	.16	—	—	—	—	—
24X30X1 (610X762x25)	—	—	—	0.04	0.05	0.06	0.07	0.07	0.08	0.09	0.1	—	—	—	—
24X36X1 (610X914X25)	—	—	—	—	—	—	—	0.06	0.07	0.07	0.08	0.09	0.09	0.10	0.11

ECONOMIZER 1−IN. (25 MM) FILTER PRESSURE DROP (in wc)

UNIT PHD4	PRESSURE DROP
30	0.20
36−60	0.25

MULTIPLICATION FACTORS

HEATER kW RATING	VOLTAGE DISTRIBUTION	MULTIPLICATION FACTOR
240	200	0.69
	208	0.75
	230	0.92
	240	1.00

ELECTRIC HEAT PRESSURE DROP TABLE (in wc) SMALL CABINET: 30

HEATER CAPACITY	STANDARD CFM (S.C.F.M)											
	500	600	700	800	900	1000	1100	1200	1300	1400	1500	1600
5kw	0.00	0.00	0.00	0.00	0.00	0.00	0.00	0.00	0.02	0.04	0.06	0.07
7.5 kw	0.00	0.00	0.00	0.00	0.00	0.00	0.02	0.03	0.05	0.07	0.08	0.09
10 kw	0.00	0.00	0.00	0.00	0.00	0.02	0.04	0.06	0.07	0.09	0.10	0.11
15 kw	0.00	0.00	0.00	0.02	0.04	0.06	0.08	0.10	0.12	0.14	0.16	0.18

ELECTRIC HEAT PRESSURE DROP TABLE (in wc) LARGE CABINET 36−60

HEATER CAPACITY	STANDARD CFM (S.C.F.M)														
	1100	1200	1300	1400	1500	1600	1700	1800	1900	2000	2100	2200	2300	2400	2500
5kw	0.00	0.00	0.00	0.01	0.02	0.03	0.04	0.05	0.06	0.07	0.08	0.09	0.10	0.11	0.12
7.5 kw	0.00	0.00	0.01	0.02	0.03	0.04	0.05	0.06	0.07	0.08	0.09	0.10	0.11	0.12	0.13
10 kw	0.00	0.00	0.01	0.02	0.03	0.04	0.05	0.06	0.07	0.08	0.09	0.10	0.11	0.12	0.13
15 kw	0.00	0.02	0.03	0.04	0.05	0.06	0.07	0.08	0.09	0.10	0.11	0.12	0.13	0.14	0.15
20 kw	0.02	0.03	0.04	0.05	0.06	0.07	0.08	0.09	0.10	0.11	0.12	0.13	0.14	0.15	0.16

MINIMUM AIRFLOW FOR RELIABLE ELECTRIC HEATER OPERATION (CFM)

SIZE	PHD430	PHD436	PHD442	PHD448	PHD460
AIRFLOW (CFM)	1025	1250	1400	1710	1800

PHD430 COOLING EXTENDED PERFORMANCE TABLE

EVAPORATOR AIR		CONDENSER ENTERING AIR TEMPERATURES °F (°C)																	
		75 (23.9)			85 (29.4)			95 (35)			105 (40.6)			115 (46.1)			125 (51.7)		
CFM / BF	EWB °F (°C)	Capacity MBtuh Total	Capacity MBtuh Sens	Total Sys KW	Capacity MBtuh Total	Capacity MBtuh Sens	Total Sys KW	Capacity MBtuh Total	Capacity MBtuh Sens	Total Sys KW	Capacity MBtuh Total	Capacity MBtuh Sens	Total Sys KW	Capacity MBtuh Total	Capacity MBtuh Sens	Total Sys KW	Capacity MBtuh Total	Capacity MBtuh Sens	Total Sys KW
875 / 0.05	57 (13.8)	28.47	28.47	1.94	27.21	27.21	2.15	25.85	25.85	2.37	24.39	24.39	2.62	22.78	22.78	2.88	20.95	20.95	3.15
	62 (16.6)	29.18	25.42	1.94	27.67	24.95	2.15	26.09	24.39	2.37	24.42	24.42	2.62	22.78	22.78	2.88	20.95	20.95	3.15
	63* (17.2)	29.61	20.60	1.94	28.05	20.16	2.15	26.40	19.65	2.38	24.64	19.08	2.62	22.73	18.41	2.88	20.62	17.62	3.15
	67 (19.4)	31.91	21.40	1.95	30.23	20.96	2.16	28.45	20.46	2.38	26.52	19.88	2.63	24.44	19.21	2.89	22.12	18.39	3.16
	72 (22.2)	34.97	17.28	1.96	33.11	16.85	2.17	31.12	16.32	2.39	28.99	15.72	2.64	26.68	15.03	2.90	24.10	14.20	3.17
1000 / 0.05	57 (13.8)	29.72	29.72	1.98	28.36	28.36	2.18	26.91	26.91	2.41	25.32	25.32	2.65	23.58	23.58	2.91	21.60	21.60	3.19
	62 (16.6)	29.97	27.26	1.98	28.41	28.34	2.18	26.91	26.91	2.41	25.33	25.33	2.65	23.58	23.58	2.91	21.60	21.60	3.19
	63* (17.2)	30.31	21.98	1.98	28.67	21.52	2.18	26.94	21.00	2.41	25.10	20.40	2.65	23.10	19.69	2.91	20.89	18.83	3.18
	67 (19.4)	32.64	22.87	1.99	30.88	22.42	2.19	29.00	21.90	2.42	26.98	21.29	2.66	24.80	20.58	2.92	22.39	19.70	3.19
	72 (22.2)	35.74	18.21	2.00	33.79	17.74	2.20	31.70	17.19	2.43	29.47	16.56	2.67	27.04	15.84	2.93	24.35	14.99	3.20
1125 / 0.06	57 (13.8)	30.79	30.79	2.01	29.34	29.34	2.22	27.78	27.78	2.44	26.09	26.09	2.69	24.23	24.23	2.95	22.12	22.12	3.22
	62 (16.6)	30.79	30.79	2.01	29.34	29.34	2.22	27.79	27.79	2.44	26.09	26.09	2.69	24.23	24.23	2.95	22.12	22.12	3.22
	63* (17.2)	30.85	23.30	2.01	29.15	22.83	2.22	27.36	22.29	2.44	25.44	21.65	2.68	23.38	20.89	2.94	21.11	19.95	3.21
	67 (19.4)	33.20	24.29	2.02	31.37	23.82	2.23	29.41	23.28	2.45	27.32	22.64	2.69	25.06	21.88	2.95	22.58	20.93	3.22
	72 (22.2)	36.33	19.07	2.03	34.30	18.58	2.24	32.12	18.01	2.46	29.81	17.37	2.70	27.30	16.63	2.96	24.52	15.74	3.23

*At 75°F (23.9 °C) entering dry bulb—Tennessee Valley Authority [TVA] rating conditions; all others at 80°F (26.7 °C) entering dry bulb. See Legend and Notes.

PHD430 HEATING EXTENDED PERFORMANCE TABLE

INDOOR AIR		OUTDOOR COIL ENTERING AIR TEMPERATURES °F (°C)																							
		–10 (–23.3)			0 (–17.8)			10 (–12.2)			20 (–6.7)			30 (–1.1)			40 (4.4)			50 (10)			60 (15.6)		
EDB	CFM	Capacity MBtuh Total	Capacity MBtuh Integ	Total Sys KW	Capacity MBtuh Total	Capacity MBtuh Integ	Total Sys KW	Capacity MBtuh Total	Capacity MBtuh Integ	Total Sys KW	Capacity MBtuh Total	Capacity MBtuh Integ	Total Sys KW	Capacity MBtuh Total	Capacity MBtuh Integ	Total Sys KW	Capacity MBtuh Total	Capacity MBtuh Integ	Total Sys KW	Capacity MBtuh Total	Capacity MBtuh Integ	Total Sys KW	Capacity MBtuh Total	Capacity MBtuh Integ	Total Sys KW
65	875	9.06	8.34	1.90	12.11	11.14	1.98	15.26	14.00	2.04	18.55	16.82	2.12	22.03	19.31	2.19	25.87	25.87	2.28	30.37	30.37	2.39	35.63	35.63	2.54
	1000	9.26	8.52	1.92	12.33	11.34	1.99	15.48	14.21	2.05	18.79	17.05	2.10	22.30	19.54	2.17	26.34	26.34	2.24	30.84	30.84	2.34	36.27	36.27	2.47
	1125	9.43	8.68	1.94	12.51	11.51	2.00	15.68	14.39	2.05	19.00	17.24	2.10	22.53	19.74	2.16	26.65	26.65	2.22	31.24	31.24	2.31	36.86	36.86	2.43
70	875	8.53	7.85	1.98	11.67	10.73	2.06	14.87	13.65	2.14	18.21	16.51	2.22	21.71	19.03	2.30	25.47	25.47	2.40	29.91	29.91	2.52	35.05	35.05	2.67
	1000	8.73	8.03	2.00	11.89	10.94	2.08	15.11	13.87	2.14	18.46	16.74	2.21	21.99	19.26	2.28	25.82	25.82	2.36	30.36	30.36	2.46	35.68	35.68	2.59
	1125	8.91	8.20	2.02	12.08	11.11	2.09	15.31	14.05	2.15	18.68	16.94	2.21	22.22	19.47	2.27	26.12	26.12	2.34	30.74	30.74	2.42	36.20	36.20	2.55
75	875	7.95	7.31	2.06	11.18	10.29	2.15	14.45	13.27	2.24	17.84	16.18	2.33	21.38	18.73	2.42	25.11	25.11	2.52	29.46	29.46	2.64	34.49	34.49	2.80
	1000	8.15	7.50	2.08	11.40	10.49	2.17	14.70	13.49	2.24	18.10	16.41	2.32	21.66	18.97	2.39	25.43	25.43	2.48	29.90	29.90	2.58	35.09	35.09	2.72
	1125	8.33	7.66	2.11	11.60	10.67	2.18	14.90	13.68	2.25	18.32	16.61	2.32	21.89	19.18	2.38	25.72	25.72	2.45	30.27	30.27	2.55	35.60	35.60	2.67

See Legend and Notes following tables.

PHD436 COOLING EXTENDED PERFORMANCE TABLE

EVAPORATOR AIR		CONDENSER ENTERING AIR TEMPERATURES °F (°C)																	
		75 (23.9)			85 (29.4)			95 (35)			105 (40.6)			115 (46.1)			125 (51.7)		
CFM / BF	EWB °F (°C)	Capacity MBtuh Total	Capacity MBtuh Sens	Total Sys KW	Capacity MBtuh Total	Capacity MBtuh Sens	Total Sys KW	Capacity MBtuh Total	Capacity MBtuh Sens	Total Sys KW	Capacity MBtuh Total	Capacity MBtuh Sens	Total Sys KW	Capacity MBtuh Total	Capacity MBtuh Sens	Total Sys KW	Capacity MBtuh Total	Capacity MBtuh Sens	Total Sys KW
1050 / 0.08	57 (13.8)	38.00	38.00	2.44	34.81	34.81	2.69	31.68	31.68	2.95	28.58	28.58	3.23	25.51	25.51	3.53	22.43	22.43	3.85
	62 (16.6)	39.23	34.90	2.45	35.69	32.70	2.69	32.23	30.51	2.95	28.85	28.27	3.23	25.55	25.55	3.53	22.43	22.43	3.85
	63* (17.2)	39.74	28.36	2.45	36.13	26.48	2.69	32.59	24.60	2.95	29.11	22.76	3.24	25.68	20.90	3.53	22.28	19.03	3.85
	67 (19.4)	42.90	29.50	2.46	39.01	27.57	2.70	35.20	25.66	2.97	31.45	23.75	3.25	27.77	21.86	3.55	24.10	19.94	3.87
	72 (22.2)	46.93	24.09	2.47	42.69	22.40	2.72	38.51	20.71	2.98	34.42	19.04	3.27	30.38	17.37	3.57	26.35	15.68	3.89
1200 / 0.09	57 (13.8)	39.72	39.72	2.48	36.36	36.36	2.72	33.04	33.04	2.99	29.76	29.76	3.27	26.51	26.51	3.57	23.26	23.26	3.88
	62 (16.6)	40.35	37.43	2.48	36.71	35.04	2.72	33.12	33.12	2.99	29.77	29.77	3.27	26.52	26.52	3.57	23.26	23.26	3.88
	63* (17.2)	40.77	30.20	2.48	37.03	28.20	2.72	33.35	26.23	2.99	29.75	24.28	3.27	26.21	22.32	3.57	22.70	20.32	3.88
	67 (19.4)	43.99	31.47	2.49	39.95	29.42	2.74	36.00	27.40	3.00	32.13	25.39	3.28	28.31	23.39	3.58	24.52	21.34	3.90
	72 (22.2)	48.09	25.31	2.51	43.69	23.54	2.75	39.37	21.78	3.02	35.13	20.04	3.30	30.95	18.29	3.60	26.79	16.52	3.92
1350 / 0.10	57 (13.8)	41.20	41.20	2.51	37.67	37.67	2.76	34.19	34.19	3.02	30.76	30.76	3.30	27.36	27.36	3.60	23.95	23.95	3.92
	62 (16.6)	41.37	39.65	2.51	37.69	37.69	2.76	34.19	34.19	3.02	30.76	30.76	3.30	27.36	27.36	3.60	23.95	23.95	3.92
	63* (17.2)	41.60	31.96	2.51	37.74	29.86	2.76	33.95	27.79	3.02	30.25	25.74	3.30	26.62	23.66	3.60	23.02	21.54	3.91
	67 (19.4)	44.85	33.35	2.52	40.70	31.21	2.77	36.63	29.08	3.03	32.65	26.97	3.31	28.73	24.84	3.61	24.84	22.67	3.93
	72 (22.2)	49.01	26.47	2.54	44.48	24.63	2.78	40.03	22.80	3.05	35.68	20.98	3.33	31.39	19.16	3.63	27.12	17.31	3.95

*At 75°F (23.9 °C) entering dry bulb—Tennessee Valley Authority [TVA] rating conditions; all others at 80°F (26.7 °C) entering dry bulb. See Legend and Notes.

PHD436 HEATING EXTENDED PERFORMANCE TABLE

INDOOR AIR		OUTDOOR COIL ENTERING AIR TEMPERATURES °F (°C)																							
		−10 (−23.3)			0 (−17.8)			10 (−12.2)			20 (−6.7)			30 (−1.1)			40 (4.4)			50 (10)			60 (15.6)		
EDB	CFM	Capacity MBtuh Total	Capacity MBtuh Integ	Total Sys KW	Capacity MBtuh Total	Capacity MBtuh Integ	Total Sys KW	Capacity MBtuh Total	Capacity MBtuh Integ	Total Sys KW	Capacity MBtuh Total	Capacity MBtuh Integ	Total Sys KW	Capacity MBtuh Total	Capacity MBtuh Integ	Total Sys KW	Capacity MBtuh Total	Capacity MBtuh Integ	Total Sys KW	Capacity MBtuh Total	Capacity MBtuh Integ	Total Sys KW	Capacity MBtuh Total	Capacity MBtuh Integ	Total Sys KW
65	1050	11.29	10.39	2.23	14.77	13.59	2.33	18.36	16.85	2.42	22.15	20.09	2.51	26.29	23.04	2.61	31.12	31.12	2.74	36.45	36.45	2.89	43.29	43.29	3.09
	1200	11.49	10.57	2.25	14.97	13.78	2.33	18.58	17.05	2.41	22.39	20.30	2.48	26.60	23.31	2.57	31.43	31.43	2.68	37.07	37.07	2.82	43.51	43.51	2.98
	1350	11.66	10.72	2.26	15.15	13.94	2.34	18.77	17.23	2.40	22.59	20.49	2.47	26.87	23.54	2.55	31.76	31.76	2.64	37.79	37.79	2.77	42.96	42.96	2.92
70	1050	10.75	9.89	2.33	14.33	13.18	2.43	17.99	16.51	2.53	21.82	19.79	2.64	25.90	22.70	2.74	30.63	30.63	2.88	35.89	35.89	3.03	42.54	42.54	3.25
	1200	10.95	10.08	2.34	14.54	13.38	2.43	18.22	16.72	2.52	22.06	20.01	2.61	26.21	22.96	2.70	31.01	31.01	2.82	36.42	36.42	2.96	43.07	43.07	3.13
	1350	11.13	10.24	2.35	14.72	13.55	2.44	18.41	16.90	2.52	22.27	20.20	2.60	26.47	23.19	2.68	31.48	31.48	2.78	37.12	37.12	2.91	42.78	42.78	3.06
75	1050	10.16	9.34	2.42	13.83	12.73	2.54	17.57	16.13	2.65	21.46	19.46	2.76	25.55	22.39	2.88	30.22	30.22	3.02	35.36	35.36	3.18	41.76	41.76	3.40
	1200	10.36	9.53	2.43	14.06	12.94	2.54	17.81	16.35	2.64	21.71	19.69	2.74	25.83	22.63	2.84	30.58	30.58	2.96	35.87	35.87	3.10	42.56	42.56	3.29
	1350	10.53	9.69	2.45	14.25	13.11	2.55	18.01	16.53	2.64	21.92	19.88	2.72	26.07	22.84	2.81	30.89	30.89	2.92	36.37	36.37	3.05	42.48	42.48	3.21

See Legend and Notes following tables.

PHD442 COOLING EXTENDED PERFORMANCE TABLE

EVAPORATOR AIR		CONDENSER ENTERING AIR TEMPERATURES °F (°C)																	
		75 (23.9)			85 (29.4)			95 (35)			105 (40.6)			115 (46.1)			125 (51.7)		
CFM / BF	EWB °F (°C)	Capacity MBtuh Total	Capacity MBtuh Sens	Total Sys KW	Capacity MBtuh Total	Capacity MBtuh Sens	Total Sys KW	Capacity MBtuh Total	Capacity MBtuh Sens	Total Sys KW	Capacity MBtuh Total	Capacity MBtuh Sens	Total Sys KW	Capacity MBtuh Total	Capacity MBtuh Sens	Total Sys KW	Capacity MBtuh Total	Capacity MBtuh Sens	Total Sys KW
1225 / 0.19	57 (13.8)	39.54	39.54	2.66	37.86	37.86	2.97	36.04	36.04	3.31	34.09	34.09	3.68	33.27	33.27	3.64	29.41	29.41	4.50
	62 (16.6)	41.07	37.14	2.68	39.05	35.92	2.99	36.93	34.59	3.32	34.67	33.19	3.69	33.74	32.57	3.64	29.46	29.46	4.50
	63* (17.2)	41.31	30.04	2.68	39.26	28.92	2.99	37.09	27.73	3.32	34.77	26.46	3.69	33.77	25.92	3.64	29.35	23.46	4.50
	67 (19.4)	44.64	31.32	2.72	42.44	30.19	3.03	40.10	28.99	3.36	37.58	27.69	3.73	36.64	27.22	3.69	31.64	24.59	4.54
	72 (22.2)	48.47	25.70	2.76	46.05	24.64	3.07	43.49	23.53	3.41	40.72	22.32	3.77	39.79	21.91	3.74	34.12	19.42	4.59
1400 / 0.21	57 (13.8)	41.22	41.22	2.72	39.41	39.41	3.03	37.47	37.47	3.37	35.37	35.37	3.74	34.56	34.56	3.70	30.33	30.33	4.56
	62 (16.6)	42.17	39.64	2.73	40.08	38.31	3.04	37.89	36.85	3.38	35.52	35.52	3.74	34.66	34.66	3.70	30.34	30.34	4.56
	63* (17.2)	42.36	31.75	2.74	40.21	30.57	3.04	37.94	29.32	3.37	35.51	27.98	3.74	34.52	27.44	3.70	29.83	24.80	4.55
	67 (19.4)	45.76	33.17	2.78	43.45	31.97	3.08	41.00	30.70	3.42	38.36	29.32	3.78	37.43	28.87	3.75	32.13	26.08	4.59
	72 (22.2)	49.65	26.83	2.82	47.11	25.72	3.13	44.43	24.56	3.46	41.52	23.28	3.83	40.63	22.89	3.80	34.63	20.24	4.64
1575 / 0.23	57 (13.8)	42.65	42.65	2.78	40.73	40.73	3.09	38.67	38.67	3.43	36.45	36.45	3.80	35.65	35.65	3.76	31.08	31.08	4.62
	62 (16.6)	43.14	41.90	2.79	40.94	40.94	3.09	38.75	38.75	3.43	36.45	36.45	3.80	35.65	35.65	3.76	31.08	31.08	4.62
	63* (17.2)	43.20	33.36	2.79	40.97	32.13	3.09	38.61	30.82	3.42	36.08	29.41	3.79	35.10	28.88	3.75	30.20	26.10	4.60
	67 (19.4)	46.66	34.92	2.83	44.26	33.67	3.13	41.71	32.33	3.47	38.97	30.89	3.83	38.06	30.44	3.80	32.50	27.49	4.64
	72 (22.2)	50.59	27.89	2.87	47.95	26.72	3.18	45.17	25.51	3.51	42.14	24.18	3.88	41.29	23.80	3.86	35.01	21.00	4.69

*At 75°F (23.9 °C) entering dry bulb—Tennessee Valley Authority [TVA] rating conditions; all others at 80°F (26.7 °C) entering dry bulb. See Legend and Notes.

PHD442 HEATING EXTENDED PERFORMANCE TABLE

INDOOR AIR		OUTDOOR COIL ENTERING AIR TEMPERATURES °F (°C)																							
		–10 (–23.3)			0 (–17.8)			10 (–12.2)			20 (–6.7)			30 (–1.1)			40 (4.4)			50 (10)			60 (15.6)		
EDB	CFM	Capacity MBtuh Total	Capacity MBtuh Integ	Total Sys KW	Capacity MBtuh Total	Capacity MBtuh Integ	Total Sys KW	Capacity MBtuh Total	Capacity MBtuh Integ	Total Sys KW	Capacity MBtuh Total	Capacity MBtuh Integ	Total Sys KW	Capacity MBtuh Total	Capacity MBtuh Integ	Total Sys KW	Capacity MBtuh Total	Capacity MBtuh Integ	Total Sys KW	Capacity MBtuh Total	Capacity MBtuh Integ	Total Sys KW	Capacity MBtuh Total	Capacity MBtuh Integ	Total Sys KW
65	1225	13.75	12.65	2.45	17.57	16.17	2.56	21.58	19.81	2.68	25.83	23.43	2.81	30.61	26.82	2.96	36.10	36.10	3.14	42.45	42.45	3.36	50.07	50.07	3.66
	1400	13.97	12.85	2.47	17.81	16.38	2.57	21.83	20.04	2.68	26.10	23.67	2.79	30.97	27.13	2.92	36.56	36.56	3.08	43.06	43.06	3.29	50.69	50.69	3.55
	1575	14.17	13.03	2.49	18.01	16.57	2.58	22.05	20.23	2.68	26.32	23.87	2.78	31.28	27.40	2.90	36.94	36.94	3.05	43.53	43.53	3.26	50.61	50.61	3.51
70	1225	13.24	12.18	2.57	17.15	15.78	2.70	21.21	19.47	2.82	25.49	23.12	2.96	30.16	26.42	3.11	35.59	35.59	3.30	41.83	41.83	3.53	49.28	49.28	3.84
	1400	13.47	12.39	2.59	17.39	16.00	2.70	21.46	19.70	2.82	25.76	23.37	2.94	30.51	26.74	3.07	36.03	36.03	3.24	42.41	42.41	3.45	50.08	50.08	3.72
	1575	13.67	12.57	2.61	17.60	16.19	2.72	21.68	19.90	2.82	26.00	23.58	2.93	30.82	27.00	3.05	36.40	36.40	3.21	42.88	42.88	3.41	50.18	50.18	3.67
75	1225	12.69	11.67	2.69	16.68	15.35	2.83	20.80	19.09	2.97	25.13	22.79	3.12	29.77	26.08	3.28	35.10	35.10	3.47	41.22	41.22	3.71	48.53	48.53	4.02
	1400	12.91	11.88	2.71	16.93	15.57	2.84	21.07	19.34	2.96	25.41	23.04	3.09	30.09	26.37	3.24	35.53	35.53	3.41	41.79	41.79	3.63	49.30	49.30	3.91
	1575	13.12	12.07	2.74	17.14	15.77	2.85	21.29	19.54	2.97	25.65	23.26	3.08	30.37	26.61	3.21	35.88	35.88	3.37	42.24	42.24	3.58	49.68	49.68	3.84

See Legend and Notes following tables.

PHD448 COOLING EXTENDED PERFORMANCE TABLE

EVAPORATOR AIR		CONDENSER ENTERING AIR TEMPERATURES °F (°C)																	
		75 (23.9)			85 (29.4)			95 (35)			105 (40.6)			115 (46.1)			125 (51.7)		
CFM / BF	EWB °F (°C)	Capacity MBtuh Total	Capacity MBtuh Sens	Total Sys KW	Capacity MBtuh Total	Capacity MBtuh Sens	Total Sys KW	Capacity MBtuh Total	Capacity MBtuh Sens	Total Sys KW	Capacity MBtuh Total	Capacity MBtuh Sens	Total Sys KW	Capacity MBtuh Total	Capacity MBtuh Sens	Total Sys KW	Capacity MBtuh Total	Capacity MBtuh Sens	Total Sys KW
1400 / 0.09	57 (13.8)	48.07	48.07	2.99	44.60	44.60	3.35	41.11	41.11	3.74	37.59	37.59	4.18	33.97	33.97	4.66	30.20	30.20	5.18
	62 (16.6)	49.24	42.95	3.00	45.38	40.81	3.35	41.54	38.58	3.75	37.68	37.68	4.18	33.97	33.97	4.66	30.20	30.20	5.18
	63* (17.2)	49.85	34.74	3.00	45.89	32.91	3.35	41.92	31.03	3.75	37.95	29.14	4.18	33.92	27.18	4.66	29.77	25.09	5.17
	67 (19.4)	53.72	36.13	3.02	49.45	34.25	3.38	45.16	32.34	3.77	40.85	30.39	4.21	36.48	28.37	4.68	31.96	26.23	5.20
	72 (22.2)	58.70	29.21	3.05	54.00	27.52	3.41	49.26	25.79	3.80	44.53	24.03	4.24	39.71	22.21	4.72	34.74	20.27	5.23
1600 / 0.10	57 (13.8)	50.08	50.08	3.05	46.40	46.40	3.41	42.70	42.70	3.81	38.95	38.95	4.25	35.11	35.11	4.72	31.11	31.11	5.24
	62 (16.6)	50.54	45.92	3.06	46.59	43.48	3.41	42.71	42.71	3.81	38.95	38.95	4.25	35.11	35.11	4.72	31.11	31.11	5.24
	63* (17.2)	50.98	36.96	3.06	46.86	35.03	3.41	42.75	33.06	3.81	38.62	31.05	4.24	34.44	28.96	4.72	30.16	26.75	5.23
	67 (19.4)	54.90	38.50	3.08	50.46	36.52	3.44	46.00	34.50	3.83	41.53	32.45	4.27	37.00	30.30	4.74	32.34	28.01	5.26
	72 (22.2)	59.95	30.65	3.11	55.05	28.88	3.47	50.14	27.08	3.86	45.24	25.24	4.30	40.25	23.33	4.77	35.12	21.31	5.28
1800 / 0.11	57 (13.8)	51.77	51.77	3.11	47.91	47.91	3.47	44.01	44.01	3.87	40.06	40.06	4.31	36.03	36.03	4.79	31.82	31.82	5.30
	62 (16.6)	51.79	51.79	3.11	47.91	47.91	3.47	44.02	44.02	3.87	40.06	40.06	4.31	36.03	36.03	4.79	31.82	31.82	5.30
	63* (17.2)	51.85	39.08	3.11	47.61	37.05	3.47	43.38	34.99	3.87	39.13	32.86	4.30	34.84	30.64	4.78	30.46	28.24	5.29
	67 (19.4)	55.81	40.79	3.14	51.24	38.71	3.50	46.63	36.58	3.89	42.04	34.40	4.33	37.39	32.12	4.80	32.61	29.67	5.31
	72 (22.2)	60.91	32.02	3.17	55.86	30.17	3.53	50.80	28.29	3.92	45.76	26.38	4.36	40.65	24.40	4.83	35.38	22.30	5.34

*At 75°F (23.9 °C) entering dry bulb—Tennessee Valley Authority [TVA] rating conditions; all others at 80°F (26.7 °C) entering dry bulb. See Legend and Notes.

PHD448 HEATING EXTENDED PERFORMANCE TABLE

INDOOR AIR		OUTDOOR COIL ENTERING AIR TEMPERATURES °F (°C)																							
		–10 (–23.3)			0 (–17.8)			10 (–12.2)			20 (–6.7)			30 (–1.1)			40 (4.4)			50 (10)			60 (15.6)		
EDB	CFM	Capacity MBtuh Total	Capacity MBtuh Integ	Total Sys KW	Capacity MBtuh Total	Capacity MBtuh Integ	Total Sys KW	Capacity MBtuh Total	Capacity MBtuh Integ	Total Sys KW	Capacity MBtuh Total	Capacity MBtuh Integ	Total Sys KW	Capacity MBtuh Total	Capacity MBtuh Integ	Total Sys KW	Capacity MBtuh Total	Capacity MBtuh Integ	Total Sys KW	Capacity MBtuh Total	Capacity MBtuh Integ	Total Sys KW	Capacity MBtuh Total	Capacity MBtuh Integ	Total Sys KW
65	1400	15.21	14.00	3.19	19.74	18.16	3.29	24.43	22.43	3.40	29.38	26.64	3.51	34.68	30.38	3.63	40.60	40.60	3.78	47.66	47.66	3.97	55.91	55.91	4.22
	1600	15.51	14.27	3.22	20.06	18.45	3.31	24.77	22.74	3.40	29.73	26.97	3.50	35.08	30.74	3.61	41.18	41.18	3.74	48.35	48.35	3.90	57.32	57.32	4.12
	1800	15.79	14.52	3.26	20.34	18.71	3.35	25.07	23.01	3.42	30.04	27.25	3.51	35.44	31.05	3.60	41.70	41.70	3.72	48.93	48.93	3.87	57.75	57.75	4.06
70	1400	14.51	13.35	3.32	19.15	17.62	3.44	23.92	21.96	3.56	28.91	26.22	3.68	34.20	29.97	3.81	39.99	39.99	3.97	46.96	46.96	4.17	55.04	55.04	4.42
	1600	14.81	13.63	3.36	19.47	17.92	3.46	24.26	22.27	3.57	29.28	26.55	3.67	34.61	30.33	3.79	40.53	40.53	3.92	47.63	47.63	4.09	56.25	56.25	4.32
	1800	15.09	13.88	3.40	19.76	18.18	3.50	24.57	22.55	3.59	29.60	26.84	3.68	34.97	30.64	3.78	40.99	40.99	3.90	48.19	48.19	4.06	57.10	57.10	4.25
75	1400	13.74	12.64	3.46	18.50	17.02	3.59	23.36	21.44	3.72	28.41	25.77	3.86	33.71	29.54	4.00	39.42	39.42	4.16	46.29	46.29	4.37	54.20	54.20	4.63
	1600	14.04	12.92	3.49	18.83	17.32	3.62	23.71	21.77	3.73	28.79	26.11	3.85	34.13	29.90	3.97	39.91	39.91	4.11	46.93	46.93	4.29	55.09	55.09	4.52
	1800	14.32	13.17	3.54	19.12	17.59	3.65	24.02	22.05	3.75	29.12	26.41	3.85	34.49	30.22	3.96	40.36	40.36	4.08	47.48	47.48	4.25	56.24	56.24	4.46

See Legend and Notes following tables.

PHD460 COOLING EXTENDED PERFORMANCE TABLE

EVAPORATOR AIR		CONDENSER ENTERING AIR TEMPERATURES °F (°C)																	
		75 (23.9)			85 (29.4)			95 (35)			105 (40.6)			115 (46.1)			125 (51.7)		
CFM / BF	EWB °F (°C)	Capacity MBtuh Total	Capacity MBtuh Sens	Total Sys KW	Capacity MBtuh Total	Capacity MBtuh Sens	Total Sys KW	Capacity MBtuh Total	Capacity MBtuh Sens	Total Sys KW	Capacity MBtuh Total	Capacity MBtuh Sens	Total Sys KW	Capacity MBtuh Total	Capacity MBtuh Sens	Total Sys KW	Capacity MBtuh Total	Capacity MBtuh Sens	Total Sys KW
1750 / 0.07	57(13.8)	63.53	63.53	3.78	58.78	58.78	4.29	53.97	53.97	4.86	49.09	49.09	5.49	44.01	44.01	6.19	42.42	42.42	6.41
	62(16.6)	65.04	51.03	3.79	59.74	50.40	4.30	54.44	49.51	4.86	49.15	49.15	5.50	44.01	44.01	6.19	38.66	38.66	6.95
	63*(17.2)	65.92	41.28	3.80	60.47	40.65	4.31	54.99	39.84	4.87	49.48	38.85	5.50	43.83	37.60	6.19	42.07	38.16	6.40
	67(19.4)	70.86	42.85	3.85	64.96	42.22	4.35	59.00	41.40	4.92	52.98	40.40	5.54	46.84	39.11	6.23	40.50	37.40	6.98
	72(22.2)	77.33	34.48	3.90	70.80	33.73	4.41	64.19	32.79	4.98	57.55	31.67	5.60	50.77	30.29	6.29	43.78	28.58	7.03
2000 / 0.08	57(13.8)	66.05	66.05	3.88	61.00	61.00	4.40	55.88	55.88	4.97	50.65	50.65	5.60	45.26	45.26	6.30	39.58	39.58	7.06
	62(16.6)	66.61	54.49	3.89	61.13	61.13	4.40	55.88	55.88	4.97	50.66	50.66	5.60	45.25	45.25	6.30	39.57	39.57	7.06
	63*(17.2)	67.26	43.89	3.89	61.59	43.24	4.40	55.88	42.41	4.97	50.16	41.35	5.59	44.32	39.99	6.29	38.33	38.21	7.04
	67(19.4)	72.23	45.64	3.94	66.09	45.00	4.45	59.87	44.14	5.01	53.63	43.07	5.64	47.29	41.70	6.33	40.75	39.91	7.08
	72(22.2)	78.76	36.15	4.00	71.95	35.36	4.51	65.10	34.38	5.07	58.23	33.22	5.70	51.25	31.78	6.38	44.04	29.99	7.12
2250 / 0.09	57(13.8)	68.16	68.16	3.98	62.83	62.83	4.50	57.41	57.41	5.07	51.90	51.90	5.70	46.22	46.22	6.40	40.27	40.27	7.16
	62(16.6)	68.17	68.17	3.98	62.83	62.83	4.50	57.41	57.41	5.07	51.90	51.90	5.71	46.22	46.22	6.40	40.27	40.27	7.16
	63*(17.2)	68.27	46.41	3.98	62.41	45.72	4.49	56.54	44.84	5.06	50.64	43.71	5.69	44.66	42.24	6.38	38.53	40.25	7.13
	67(19.4)	73.27	48.35	4.03	66.92	47.68	4.54	60.50	46.77	5.10	54.10	45.64	5.73	47.60	44.16	6.42	40.92	42.14	7.17
	72(22.2)	79.84	37.74	4.09	72.79	36.91	4.60	65.73	35.91	5.16	58.70	34.70	5.79	51.53	33.23	6.48	44.15	31.39	7.22

*At 75°F (23.9 °C) entering dry bulb—Tennessee Valley Authority [TVA] rating conditions; all others at 80°F (26.7 °C) entering dry bulb. See Legend and Notes.

PHD460 HEATING EXTENDED PERFORMANCE TABLE

INDOOR AIR		OUTDOOR COIL ENTERING AIR TEMPERATURES °F (°C)																							
		–10 (–23.3)			0 (–17.8)			10 (–12.2)			20 (–6.7)			30 (–1.1)			40 (4.4)			50 (10)			60 (15.6)		
EDB	CFM	Capacity MBtuh Total	Capacity MBtuh Integ	Total Sys KW	Capacity MBtuh Total	Capacity MBtuh Integ	Total Sys KW	Capacity MBtuh Total	Capacity MBtuh Integ	Total Sys KW	Capacity MBtuh Total	Capacity MBtuh Integ	Total Sys KW	Capacity MBtuh Total	Capacity MBtuh Integ	Total Sys KW	Capacity MBtuh Total	Capacity MBtuh Integ	Total Sys KW	Capacity MBtuh Total	Capacity MBtuh Integ	Total Sys KW	Capacity MBtuh Total	Capacity MBtuh Integ	Total Sys KW
65	1750	21.44	19.72	3.85	27.02	24.86	3.97	32.88	30.18	4.09	39.13	35.49	4.23	46.15	40.44	4.40	54.26	54.26	4.61	63.98	63.98	4.86	74.82	74.82	5.16
	2000	21.85	20.11	3.90	27.45	25.26	4.01	33.33	30.60	4.12	39.63	35.94	4.24	46.77	40.98	4.38	55.02	55.02	4.56	65.19	65.19	4.78	74.99	74.99	5.04
	2250	22.24	20.46	3.97	27.85	25.63	4.06	33.75	30.98	4.15	40.07	36.34	4.26	47.32	41.46	4.39	56.12	56.12	4.56	65.29	65.29	4.75	73.80	73.80	4.99
70	1750	20.75	19.09	4.03	26.44	24.33	4.16	32.38	29.72	4.30	38.64	35.04	4.45	45.62	39.97	4.62	53.55	53.55	4.84	62.76	62.76	5.10	73.96	73.96	5.41
	2000	21.17	19.48	4.09	26.88	24.73	4.20	32.84	30.14	4.32	39.14	35.50	4.45	46.18	40.46	4.60	54.29	54.29	4.79	64.31	64.31	5.02	74.39	74.39	5.29
	2250	21.56	19.84	4.15	27.28	25.11	4.25	33.25	30.52	4.36	39.59	35.91	4.47	46.68	40.90	4.61	54.93	54.93	4.78	64.77	64.77	4.98	73.71	73.71	5.23
75	1750	20.00	18.40	4.22	25.80	23.74	4.36	31.83	29.21	4.51	38.15	34.60	4.68	45.07	39.49	4.86	52.71	52.71	5.07	61.83	61.83	5.35	73.09	73.09	5.68
	2000	20.42	18.79	4.28	26.26	24.16	4.40	32.30	29.64	4.53	38.62	35.03	4.67	45.64	39.99	4.83	53.58	53.58	5.03	63.19	63.19	5.27	73.64	73.64	5.54
	2250	20.82	19.15	4.34	26.67	24.54	4.46	32.73	30.04	4.57	39.07	35.43	4.69	46.14	40.43	4.84	54.20	54.20	5.01	64.17	64.17	5.22	73.39	73.39	5.47

LEGEND

BF — Bypass Factor
edb — Entering Dry–Bulb
Ewb — Entering Wet–Bulb
kW — Total Unit Power Input
SHC — Sensible Heat Capacity (1000 Btuh)
TC — Total Capacity (1000 Btuh) (net)
rh —Relative Humidity

COOLING NOTES:

1. Ratings are net; they account for the effects of the evaporator–fan motor power and heat.
2. Direct interpolation is permissible. Do not extrapolate.
3. The following formulas may be used:

$$t_{ldb} = t_{edb} - \frac{\text{Sensible capacity (Btuh)}}{1.10 \times \text{cfm}}$$

t_{lwb} = Wet–bulb temperature corresponding to enthalpy air leaving evaporator coil (h_{lwb})

$$h_{lwb} = h_{ewb} - \frac{\text{total capacity (Btuh)}}{4.5 \times \text{cfm}}$$

Where: h_{ewb} = Enthalpy of air entering evaporator coil

4. The SHC is based on 80°F (26.7°C) edb temperature of air entering evaporator coil. Below 80°F (26.7°C) edb, subtract (corr factor x cfm) from SHC. Above 80°F (26.7°C) edb, add (corr factor x cfm) to SHC.
Correction Factor = 1.10 x (1 + BF) x (edb + 80).

5. Integrated capacity is maximum (instantaneous) capacity less the effect of frost on the outdoor coil and the heat required to defrost it.

SPECIFICATIONS SUBJECT TO CHANGE WITHOUT NOTICE

UNIT	SERIES	ELECTRICAL CHARACTERISTICS	UNIT WT.		UNIT HEIGHT IN/MM	CENTER OF GRAVITY IN/MM		
			LB	KG	"A"	X	Y	Z
30	1	208/230-1, 208/230-3-60	340	154	44-1/8 1121	20-1/2 521	15-1/2 394	16-1/2 419

UNITS	VOLTAGE	CORNER WEIGHT LB/KG								
		"1"		"2"		"3"		"4"		
30	208/230	90	41	71	32	79	36	100	45	

NOTE: ALL TABLE DATA RELEVANT FOR ALL FACTORY INSTALLED OPTIONS EXCEPT ECONOMIZER

REQUIRED CLEARANCES TO COMBUSTIBLE MAT'L.

	INCHES [MM]
TOP OF UNIT	14 [355.6]
DUCT SIDE OF UNIT	2 [50.8]
SIDE OPPOSITE DUCTS	14 [355.6]
BOTTOM OF UNIT	0 [0.0]
ELECTRICAL PANEL	36 [914.4]

NEC. REQUIRED CLEARANCES.

	INCHES [MM]
BETWEEN UNITS, POWER ENTRY SIDE	42 [1066.8]
UNIT AND UNGROUNDED SURFACES, POWER ENTRY SIDE	36 [914.0]
UNIT AND BLOCK OR CONCRETE WALLS AND OTHER GROUNDED SURFACES, POWER ENTRY SIDE	42 [1066.8]

REQUIRED CLEARANCE FOR OPERATION AND SERVICING

	INCHES [MM]
EVAP. COIL ACCESS SIDE	36 [914.0]
POWER ENTRY SIDE	42 [1066.8]
(EXCEPT FOR NEC REQUIREMENTS)	
UNIT TOP	48 [1219.2]
SIDE OPPOSITE DUCTS	36 [914.0]
DUCT PANEL	12 [304.8]*

*MINIMUM DISTANCES-IF UNIT IS PLACED LESS THAN 12 [304.8] FROM WALL SYSTEM,THEN SYSTEM PERFORMANCE MAYBE COMPROMISED.

DIMENSIONS IN [] ARE IN MILLIMETERS

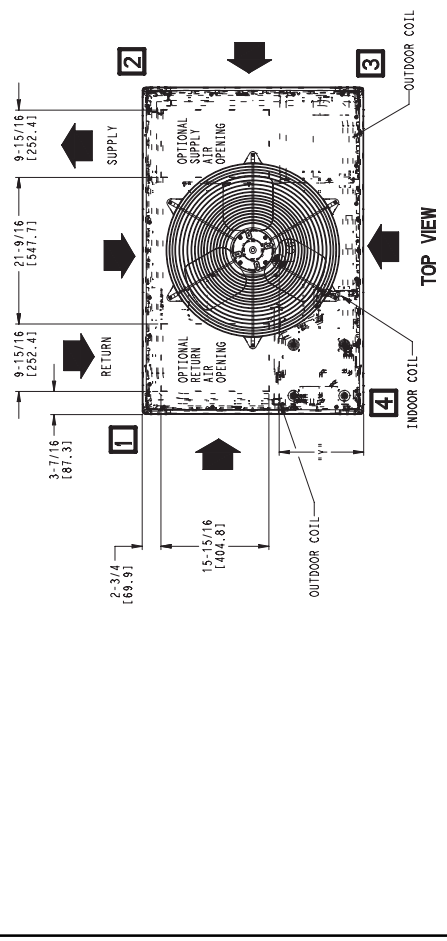

TOP VIEW

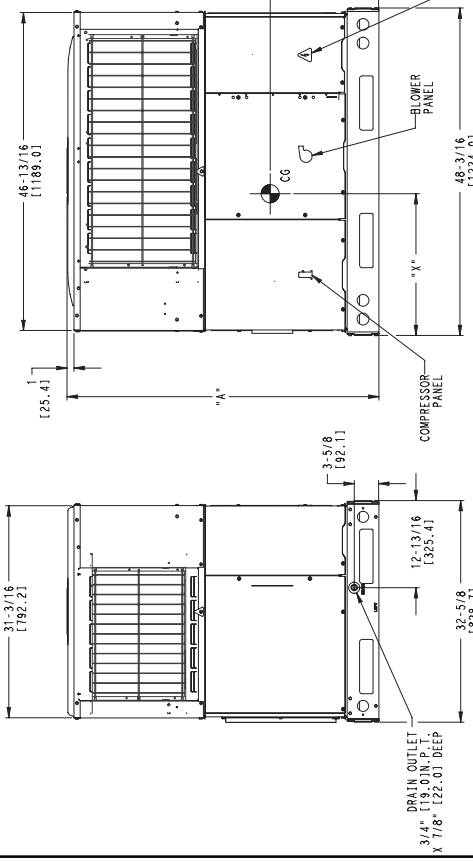

FRONT VIEW

LEFT SIDE VIEW

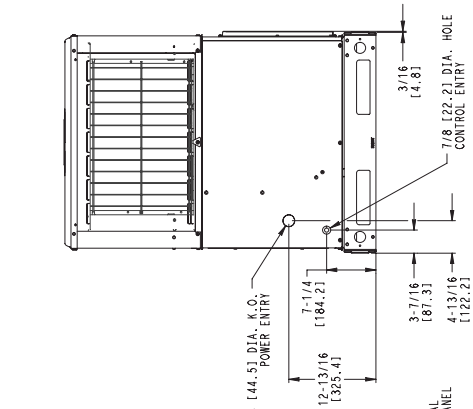

RIGHT SIDE VIEW

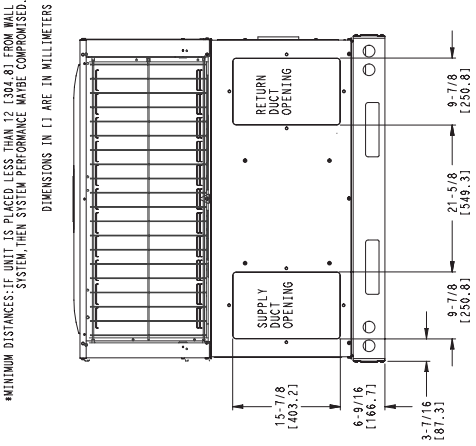

REAR VIEW

50VT500201

REV 2.0

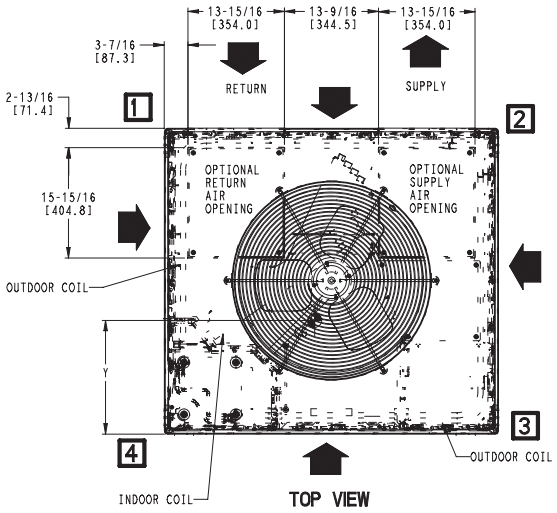

TOP VIEW

UNIT	SERIES	ELECTRICAL CHARACTERISTICS	UNIT WT.		UNIT HEIGHT IN/MM		CENTER OF GRAVITY IN/MM					
			LB	KG	"A"		X		Y		Z	
36	1	208/230-1, 208/230-3-60	418	190	44-3/4	1137	20-1/2	521	17-1/2	445	17-3/8	441
	1	460-3-60	432	196	44-3/4	1137	20-1/2	521	17-1/2	445	17-3/8	441
42	1	208/230-1, 208/230-3-60	464	210	48-3/4	1238	20-1/2	521	17-1/2	445	17-3/8	448
	1	460-3-60	476	216	48-3/4	1238	20-1/2	521	17-1/2	445	17-3/8	448
48	1	208/230-1, 208/230-3-60	452	205	48-3/4	1238	20-1/2	521	17-1/2	445	17-3/8	448
	1	460-3-60	466	211	48-3/4	1238	20-1/2	521	17-1/2	445	17-3/8	448
60	1	208/230-1, 208/230-3-60	506	230	54-3/4	1391	20-1/2	521	17-1/2	445	18	457
	1	460-3-60	520	236	54-3/4	1391	20-1/2	521	17-1/2	445	18	457

UNIT	VOLTAGE	CORNER WEIGHTS LB/KG							
		"1"		"2"		"3"		"4"	
36	208/230	92	42	73	33	111	50	142	64
	460	96	43	75	34	115	52	146	66
42	208/230	103	47	81	37	124	56	157	71
	460	105	48	83	38	127	57	161	73
48	208/230	100	45	79	36	120	55	153	69
	460	103	47	81	37	124	56	158	72
60	208/230	112	51	88	40	135	61	171	78
	460	115	52	90	41	138	63	176	80

NOTE: ALL TABLE DATA RELEVANT FOR ALL FACTORY INSTALLED OPTIONS EXCEPT ECONOMIZER

REQUIRED CLEARANCES TO COMBUSTIBLE MATL.

	INCHES [MM]
TOP OF UNIT	14 [355.6]
DUCT SIDE OF UNIT	2 [50.8]
SIDE OPPOSITE DUCTS	14 [355.6]
BOTTOM OF UNIT	0 [0.0]
ELECTRICAL PANEL	36 [914.4]

NEC. REQUIRED CLEARANCES.

	INCHES [MM]
BETWEEN UNITS, POWER ENTRY SIDE	42 [1066.8]
UNIT AND UNGROUNDED SURFACES, POWER ENTRY SIDE	36 [914.0]
UNIT AND BLOCK OR CONCRETE WALLS AND OTHER GROUNDED SURFACES, POWER ENTRY SIDE	42 [1066.8]

REQUIRED CLEARANCE FOR OPERATION AND SERVICING

	INCHES [MM]
EVAP. COIL ACCESS SIDE	36 [914.0]
POWER ENTRY SIDE	42 [1066.8]
(EXCEPT FOR NEC REQUIREMENTS)	
UNIT TOP	48 [1219.2]
SIDE OPPOSITE DUCTS	36 [914.0]
DUCT PANEL	12 [304.8]*

*MINIMUM DISTANCES:IF UNIT IS PLACED LESS THAN 12 [304.8] FROM WALL SYSTEM,THEN SYSTEM PERFORMANCE MAYBE COMPROMISED.

DIMENSIONS IN [] ARE IN MM

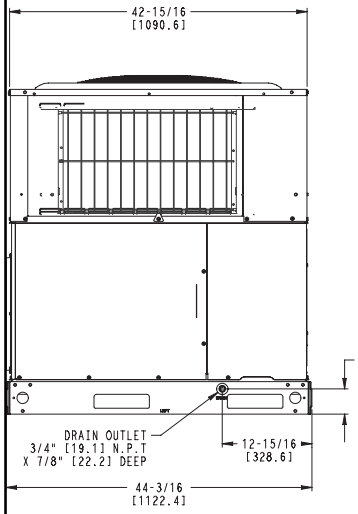

LEFT SIDE VIEW

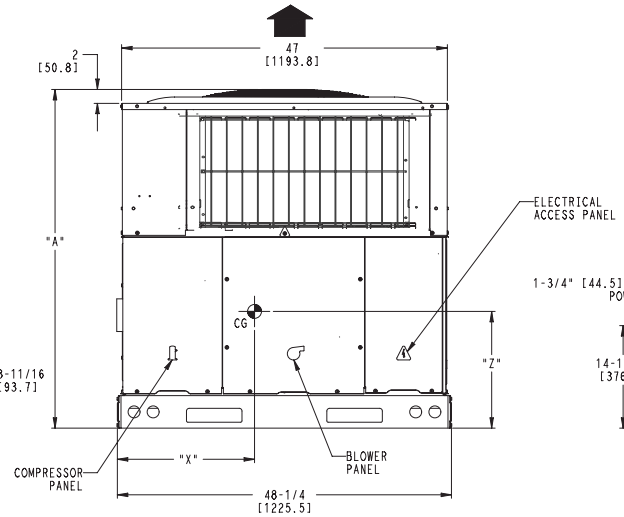

FRONT VIEW

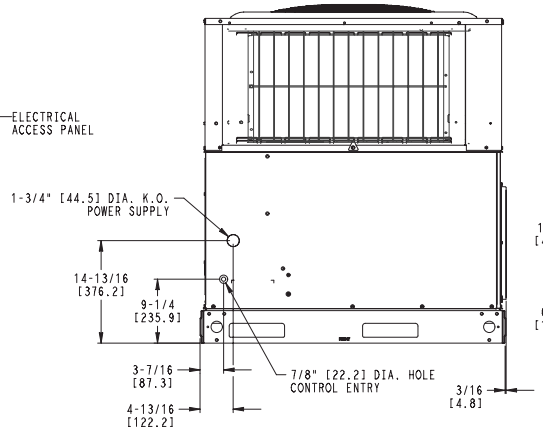

RIGHT SIDE VIEW

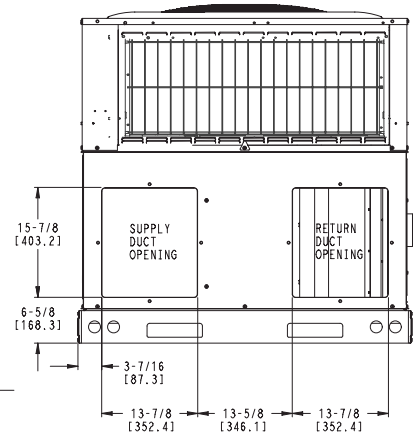

REAR VIEW

50VT500202	REV 2.0

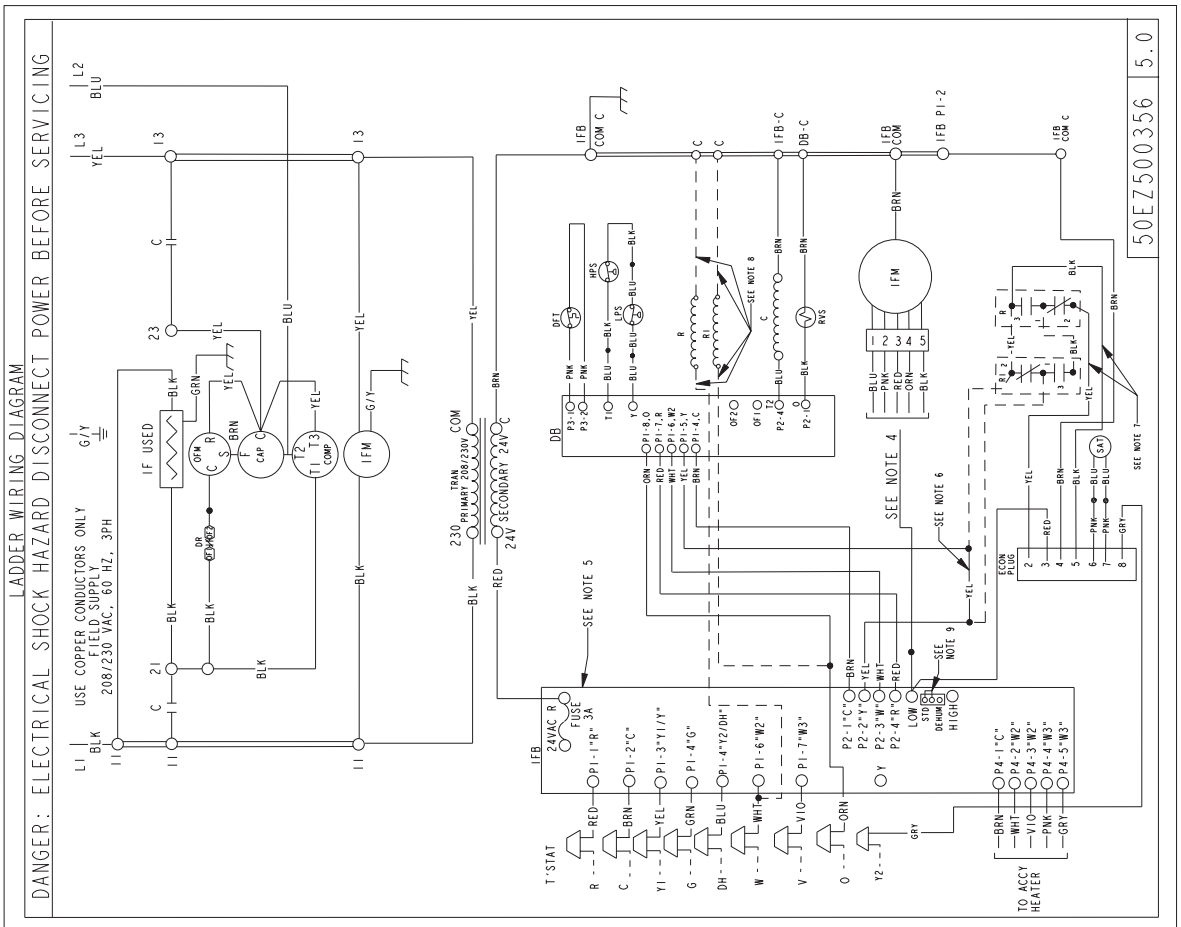
LADDER WIRING DIAGRAM
DANGER: ELECTRICAL SHOCK HAZARD DISCONNECT POWER BEFORE SERVICING
USE COPPER CONDUCTORS ONLY
FIELD SUPPLY
208/230 VAC, 60 HZ, 3PH
IF USED
TRAN
PRIMARY 208/230V
SECONDARY 24V
SEE NOTE 4
SEE NOTE 5
SEE NOTE 6
SEE NOTE 7
SEE NOTE 8
SEE NOTE 9
T'STAT
TO ACCY HEATER
50EZ500356 5.0

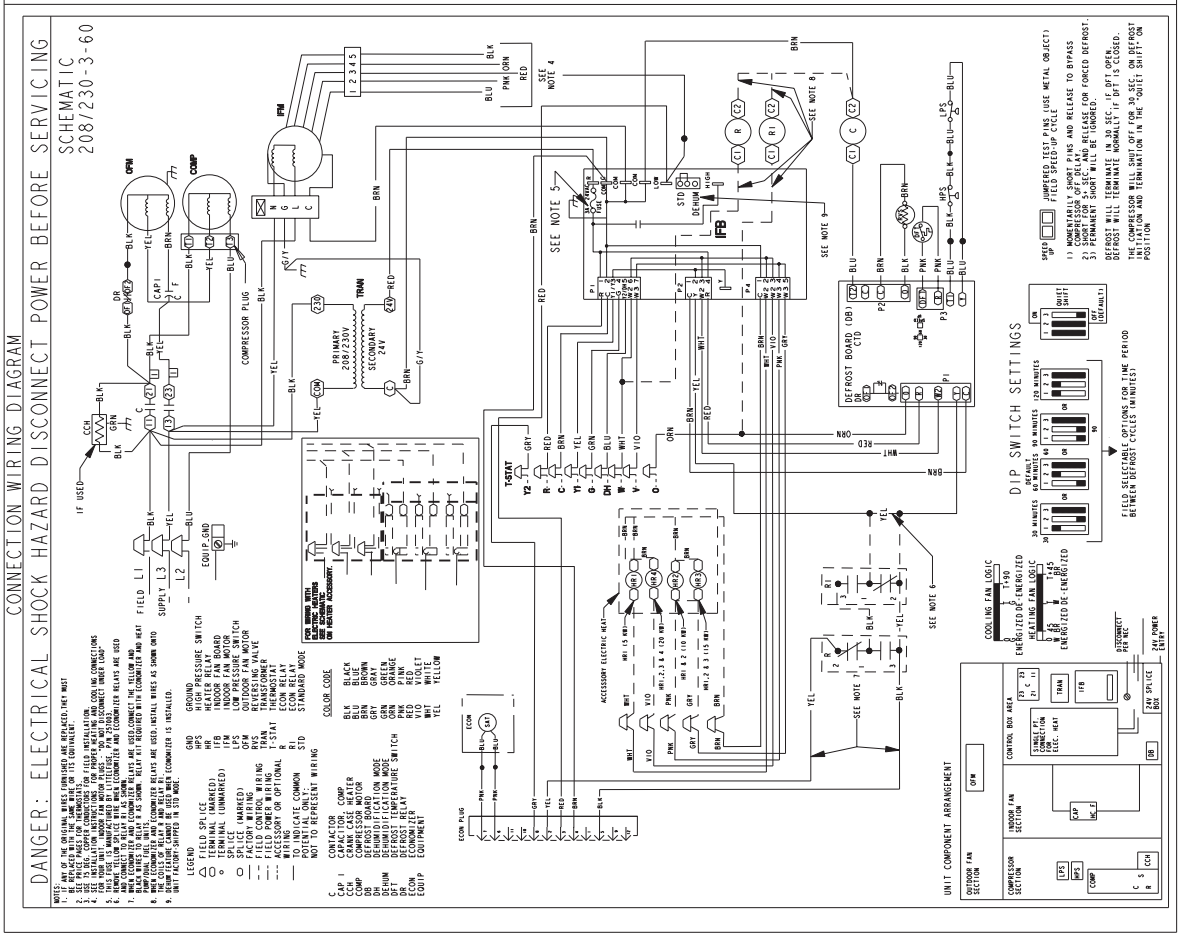
CONNECTION WIRING DIAGRAM
DANGER: ELECTRICAL SHOCK HAZARD DISCONNECT POWER BEFORE SERVICING
SCHEMATIC
208/230-3-60
DEFROST BOARD (DB)
DIP SWITCH SETTINGS
UNIT COMPONENT ARRANGEMENT

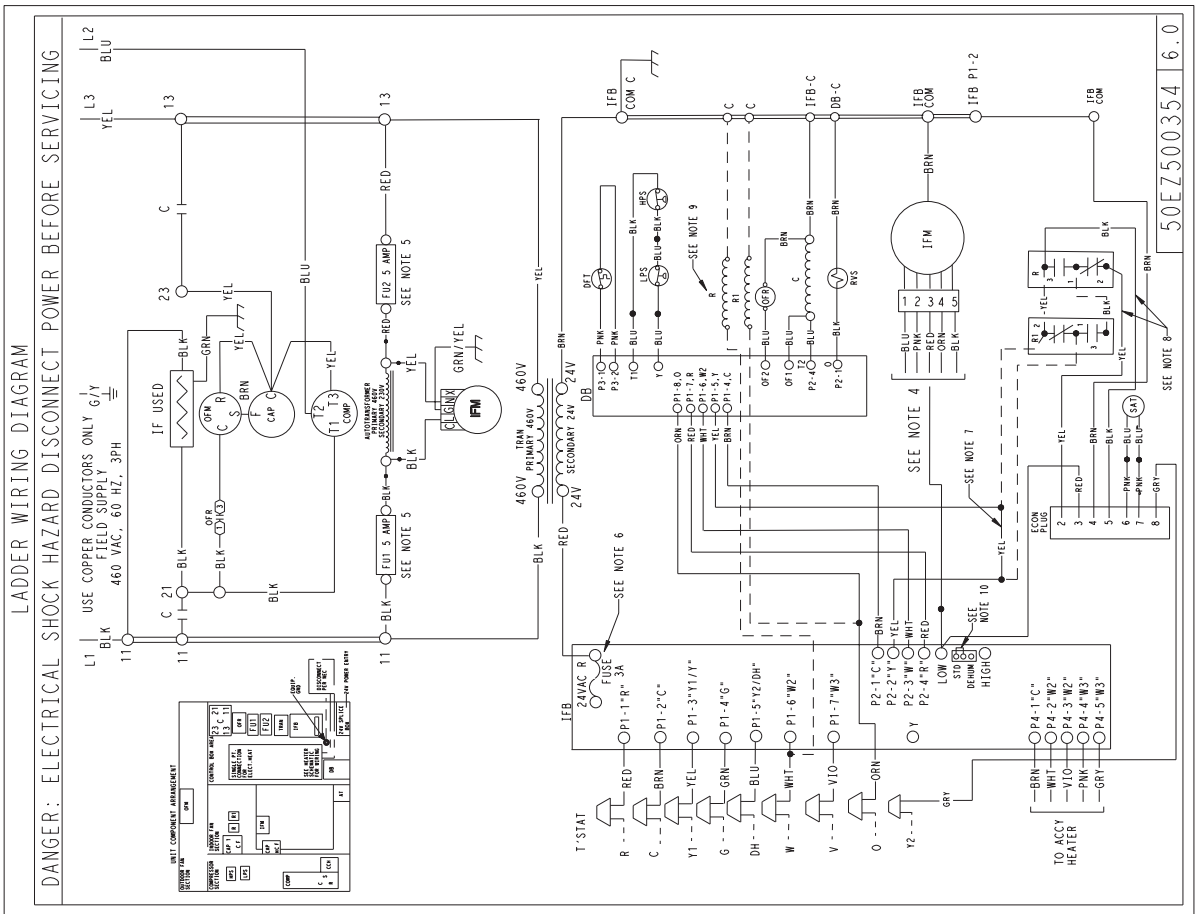
LADDER WIRING DIAGRAM
DANGER: ELECTRICAL SHOCK HAZARD DISCONNECT POWER BEFORE SERVICING
USE COPPER CONDUCTORS ONLY
FIELD SUPPLY
460 VAC, 60 HZ, 3PH
IF USED
SEE NOTE 5
SEE NOTE 6
SEE NOTE 7
SEE NOTE 8
SEE NOTE 9
SEE NOTE 10
SEE NOTE 4
TRAN
PRIMARY 460V
SECONDARY 24V
IFM
T-STAT
TO ACCY HEATER
50E7500354 6.0

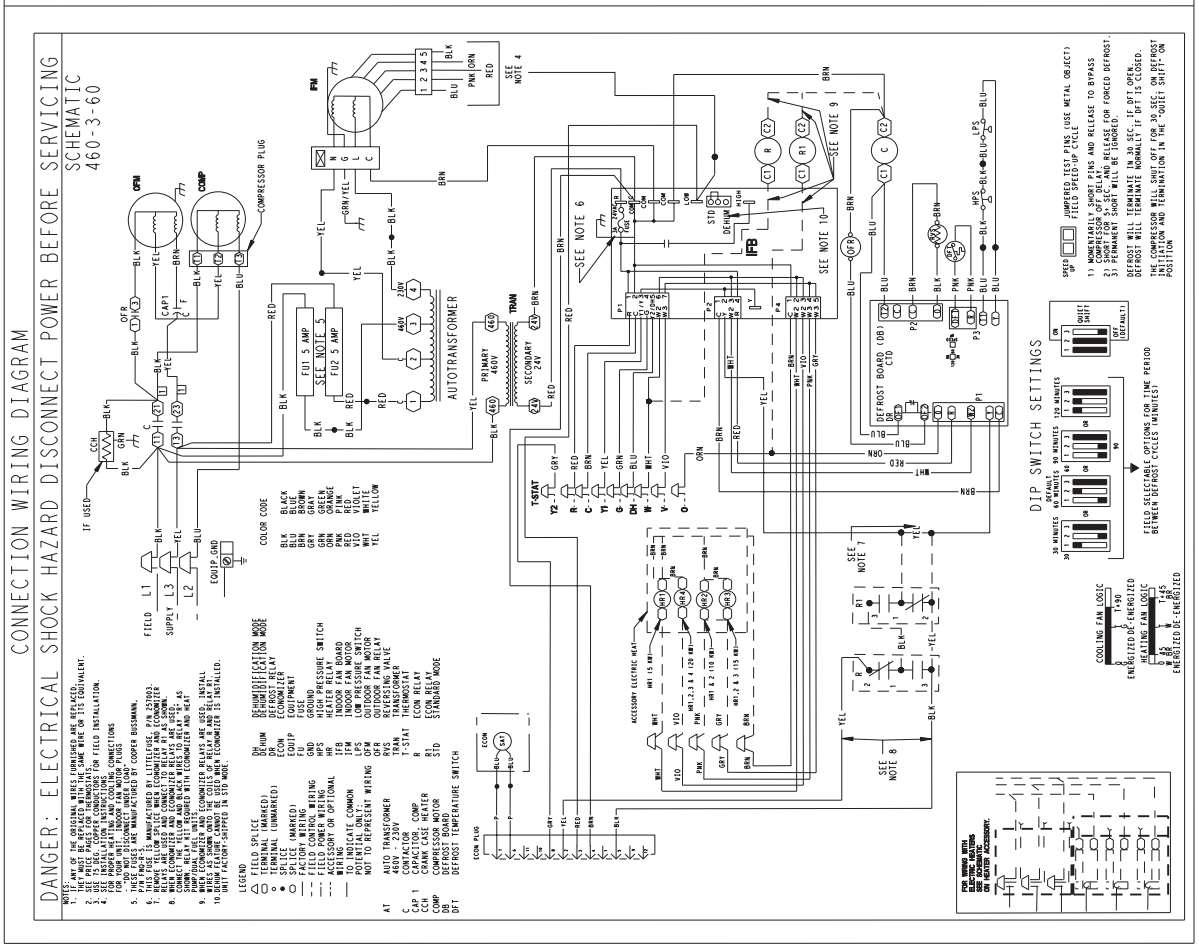
CONNECTION WIRING DIAGRAM
DANGER: ELECTRICAL SHOCK HAZARD DISCONNECT POWER BEFORE SERVICING
SCHEMATIC
460-3-60
AUTOTRANSFORMER
COMPRESSOR PLUG
DEFROST BOARD (DB)
DIP SWITCH SETTINGS
COOLING FAN LOGIC
HEATING FAN LOGIC
ENERGIZED DE-ENERGIZED

CONTROLS

Operating sequence

When power is supplied to unit, the transformer (TRAN) is energized.

On units with crankcase heater, heater is also energized.

Cooling — With the thermostat in the cooling position, the thermostat makes circuit R−O. This energizes the reversing valve solenoid (RVS) and places the unit in standby condition for cooling.

As the space temperature rises, the thermostat closes circuit R−Y. A circuit is made to contactor (C), starting the compressor (COMP) and outdoor−fan motor (OFM). Circuit R−G is made at the same time and starts the indoor−fan motor (IFM).

When the thermostat is satisfied, contacts open, deenergizing C. The COMP and OFM stop, and the IFM stops after the preselected time delay.

Heating — On a call for heat, thermostat makes circuits R−Y and R−G.

A circuit is made to C, starting COMP and OFM. Circuit R−G also is completed, energizing IFR and starting IFM after the selected time delay.

Should room temperature continue to fall, circuit R−W is made through second−stage thermostat. If optional electric heat package is used, a relay is energized, bringing on first bank of supplemental electric heat. When thermostat is satisfied, contacts open, deenergizing contactor and relay; motors and heaters deenergize.

Defrost — Defrost board (DB) is a time and temperature control, which includes a field−selectable time period (dip switch 1 and 2 on the board) between checks for defrost (30, 60, 90, or 120 minutes). Electronic timer and defrost cycle start only when contactor is energized and defrost thermostat (DFT) is closed.

The defrost board is also equipped with a third dip switch for selecting Quiet Shift operation. The Quiet Shift operation turns compressor off at defrost initiation and termination. Unit is factory shipped with quiet shift turned off.

Defrost mode is identical to cooling mode, except outdoor fan motor stops and a bank of optional electric heat turns on to warm air supplying the conditioned space.

NOTE:

1. Compressor time delay occurs through the defrost control board.
2. Defrost control board has built in 5 minute compressor delay; once the compressor has started and then stopped, it cannot be restarted again until 5 minutes have elapsed.

ECONOMIZER, FILTER RACK, and MANUAL OUTSIDE AIR DAMPER

ECONOMIZER

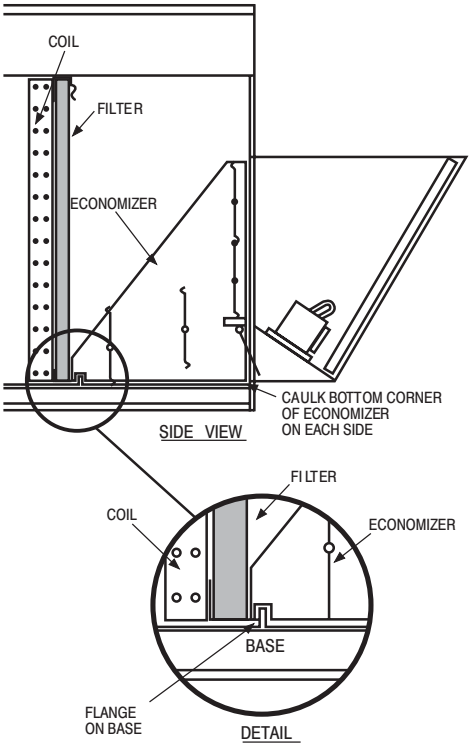

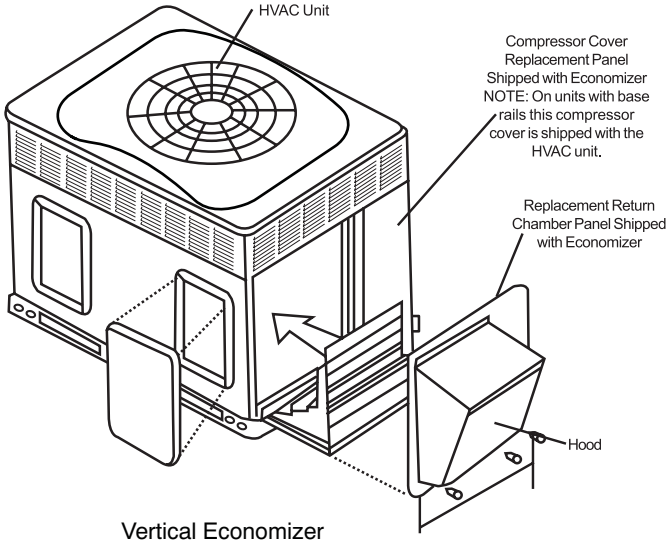

Vertical Economizer

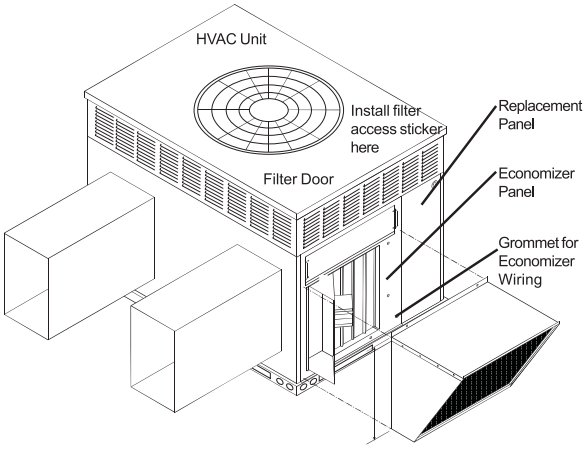

Horizontal Economizer

FILTER RACK

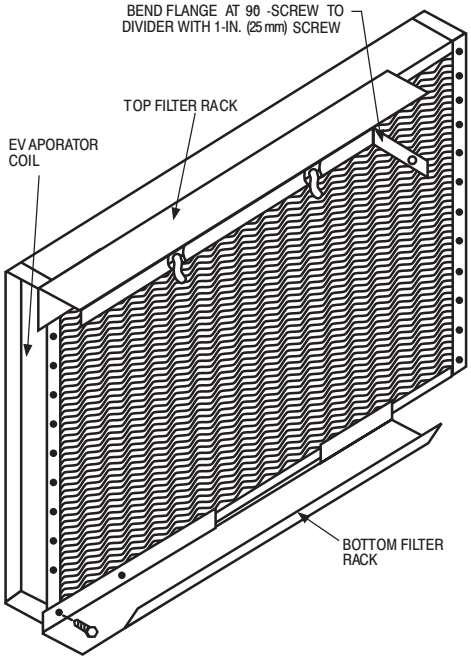

MANUAL OUTSIDE AIR DAMPER

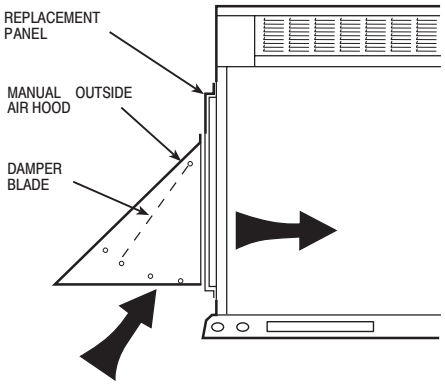

ROOF CURBS

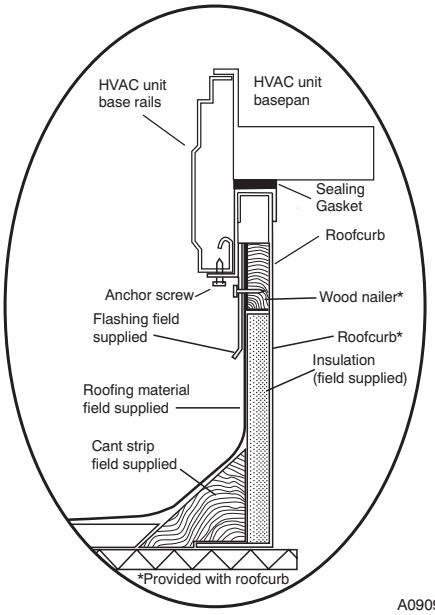

ROOF CURB DETAIL

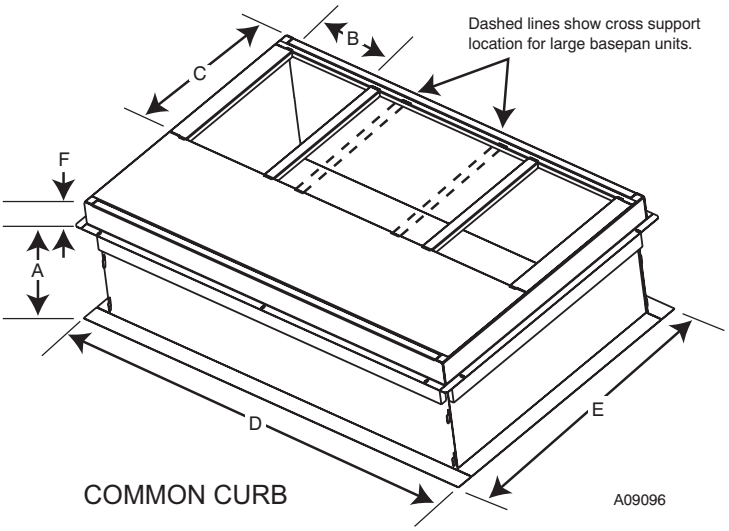

COMMON CURB

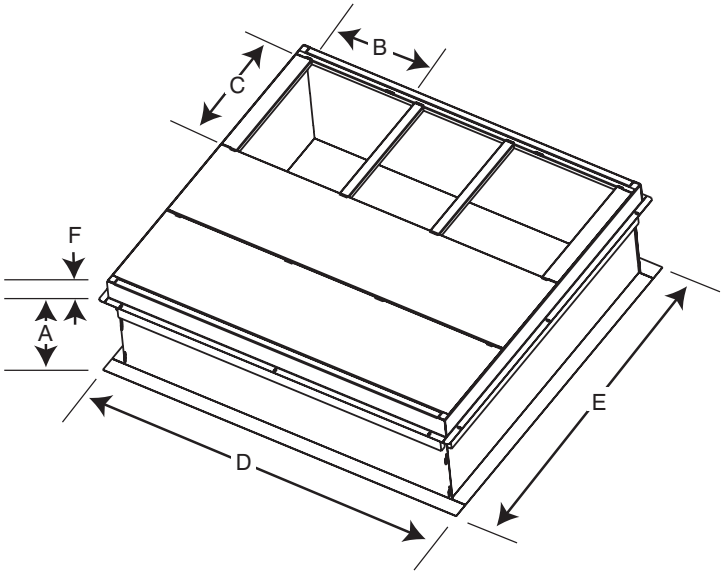

LARGE CURB

A09095

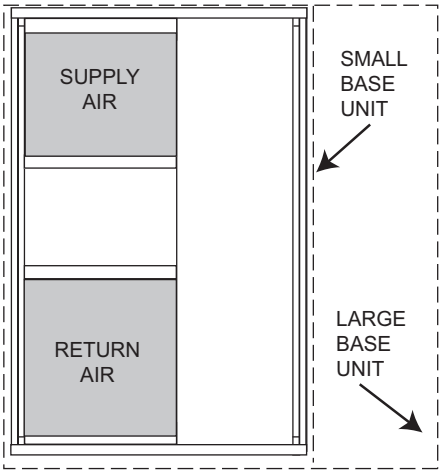

UNIT PLACEMENT ON COMMON CURB

A09094

SMALL OR LARGE BASE UNIT

UNIT SIZE	CATALOG NUMBER	A IN. (mm)	B (small base) IN. (mm)*	B (large base) IN. (mm)*	C IN. (mm)	D IN. (mm)	E IN. (mm)	F IN. (mm)
Small or Large	CPRFCURB010A00	11 (279)	10 (254)	14 (356)	16 (406)	47.8 (1214)	32.4 (822)	2.7 (69)
	CPRFCURB011A00	14 (356)						
Large	CPRFCURB012A00	11 (279)	N/A				43.9 (1116)	
	CPRFCURB013A00	14 (356)						

* Part Numbers CPRCURB010A00 and CPRCURB011A00 can be used on both small and large basepan units. The cross supports must be located based on whether the unit is a small basepan or a large basepan.

NOTES:

1. Roof curb must be set up for unit being installed.
2. Seal strip must be applied, as required, to unit being installed.
3. Roof curb is made of 16−gauge steel.
4. Attach ductwork to curb (flanges of duct rest on curb).
5. Insulated panels: 1−in. (25.4 mm) thick fiberglass 1 lb. density.

PHD4 ACCESSORIES (Continued)		
Accessory Model Number	**Description**	**Use With**
CURBS		
CPRFCURB010A00	Roof Curb, 11” High	30 − 60
CPRFCURB011A00	Roof Curb, 14” High	30 − 60
CPRFCURB012A00	Roof Curb, 11” High	36 − 60
CPRFCURB013A00	Roof Curb, 14” High	36 − 60
Note: CPRFCURB010A00 AND CPRFCURB011A00 can be used with 42−60 size units with some overhang.		
ADAPTER CURBS*		
CPADCURB001A00	Adapter curb for use with NPRFCURB006A00 & NPRFCURB007A00	30
CPADCURB002A00	Adapter curb for use with NPRFCURB008A00 & NPRFCURB009A00	36 − 60
* Can also be used when replacing other manufacturer’s older generation units that contain a composite base without a metal base rail.		
CONCENTRIC ADAPTERS − (Use with curb only)		
NPCONADP001A00	For 18” round duct (use with curbs CPRFCURB010A00, CPRFCURB011A00)	Small Curb
NPCONADP002A00	For 18” round duct (use with curbs CPRFCURB012A00, CPRFCURB013A00)	Large Curb
CONCENTRIC DIFFUSERS − (Ceiling or under roof)		
AXB020CSA*	Step Down Diffuser − Fits 2’ x 4’ Ceiling Grid (16” round collars for flex conn.)	30 − 42
AXB020CFA*	Flush Mount Diffuser − Fits 2’ x 4’ Ceiling Grid (16” round collars for flex conn.)	30 − 42
AXB030CSA	Step Down Diffuser − Fits 2’ x 4’ Ceiling Grid (18” round collars for flex conn.)	30 − 60
AXB030CFA	Flush Mount Diffuser − Fits 2’ x 4’ Ceiling Grid (18” round collars for flex conn.)	30 − 60
* A field supplied 18” to 16” round reducer required when used with NP concentric adaptor		
ECONOMIZERS		
CPECOMZR007A00	Dedicated Vertical Economizer − Internal with solid state controller, gear driven, fully modulating damper, spring return actuator, up to 50% barometric relief, supply and dry bulb outdoor air sensors. Includes filter rack with 1” filters*.	30
CPECOMZR008A00		36, 42
CPECOMZR009A00		48, 60
CPECOMZR010A00	Dedicated Horizontal Economizer − Internal with solid state controller, fully modulating damper, spring return actuator, supply and dry bulb outdoor air sensor, and low ambient compressor lockout switch included. Includes filter rack with 1−inch filters*.	30
CPECOMZR011A00		36, 42
CPECOMZR012A00		48, 60
CPRLYKIT001A00	Economizer Relay for Heat Pumps	ALL
AXB078ENT	Outdoor Enthalpy Control	ALL
* Outdoor enthalpy available as field installed accessory; Filter rack and 1” filter, same as CPFILTRK kit		
DAMPERS		
CPMANDPR007A00	Manual Outside Air Damper − (Includes filter rack and 1” filter, same as CPFILTRK kit)	30
CPMANDPR008A00		36, 42
CPMANDPR009A00		48, 60
INTERNAL FILTER RACKS		
CPFILTRK007A00	Internal Filter Rack (includes 1−inch filters)	30
CPFILTRK008A00		36, 42
CPFILTRK009A00		48, 60
LOW AMBIENT, ANTI−CYCLE TIMER		
CPLOWAMB001A00	Low Ambient Control − enables cooling system to operate down to 0 Deg. F by cycling condenser fan on and off.	ALL
NRTIMEGD001A00	Five Minute Compressor Delay	ALL
ELECTRIC HEATERS	**Nominal Capacity kW / Fuses**	
208/230−3−60		
EHNA05H0N	3.8 − 5.0 kW / 0	ALL
EHNA10H0N	7.5 − 10.0 kW / 0	30 − 42
EHNA10H6F	7.5 − 10.0 kW / 6	ALL
EHNA15H6F	11.3 − 15.0 kW / 6	ALL
EHNA20H6F	15 − 20.0 kW / 6	42 − 60
460−3−60		
EHNA05L0N	5.0 kW / 0	ALL
EHNA10L0N	10.0 kW / 0	ALL
EHNA15L0N	15.0 kW / 0	ALL
EHNA20L0N	20.0 kW / 0	42 − 60
DUAL POINT WIRING KIT		
CPDUALPT001A00	Dual Point Wiring kit, 5−20kW Heaters	ALL
DUCT TRANSITIONS		
NPDUCFLG002A00	Square to 14” Round (1 set of 2, use with horizontal duct flanges only)	30−48

NOTE: Crankcase heaters standard on all models.