F97CMN
Modulating, 4-Way Multipoise
Variable Speed, Condensing Gas Furnace

Arcoaire® Air Conditioning & Heating

Product Specifications

SYST0101CW Recommended (sold separately)

A200355

Illustrations and photographs are only representative. Some product models may vary.

⚠ WARNING

CARBON MONOXIDE POISONING AND FIRE HAZARD

Failure to follow this warning could result in personal injury, death, and/or property damage.

This furnace is not designed for use in recreation vehicles, manufactured (mobile) homes or outdoors.

Failure to follow this warning could result in personal injury, death, and/or property damage.

Use of the AHRI Certified TM Mark indicates a manufacturer's participation in the program. For verification of certification for individual products, go to www.ahridirectory.org .

ISO 9001 Quality

A200326

EASIER TO SELL

- Up to 98% AFUE in upflow and horizontal positions
  Up to 96.7% AFUE in downflow
- Modulating heating operation (40% - 100% capacity)
- ION™ Communicating Control System
- Variable speed, constant airflow ECM blower motor
- Supports single and multi-stage cooling units
- Dehumidification feature in cooling
- All sizes can be installed in air quality management districts with a 40 ng/J NOx emissions requirement
- Cabinet air leakage less than 2.0% at 1.0 in. W.C. and cabinet air leakage less than 1.4% at 0.5 in. W.C. when tested in accordance with ASHRAE standard 193

TOUGHER

- Flame roll-out sensors standard
- Adjustable heating blower OFF delay
- Factory set blower ON delay
- RPJ® primary heat exchanger
- Stainless steel secondary heat exchanger
- High temperature limit control designed to prevent overheating
- Direct ignition with Silicon Nitride igniter

QUIETER

- Operates quieter at lower heating rates
- Variable speed induced draft combustion blower
- Variable speed, constant airflow, communicating ECM blower motor
- Insulated steel cabinet

EASIER TO INSTALL AND SERVICE

- Direct vent (2-pipe) or ventilated combustion air
- 24 VAC humidifier terminal
- Electronic air cleaner terminal
- 35" (889mm) high, for ease of installation and room for service
- Quarter turn knobs for easy door removal and secure attachment
- Convertible to propane with gas conversion accessory kit
- Four position - upflow/downflow/horizontal (left/right) installation
- At least twelve different venting configurations
- Through the casing flue pipe for counterflow
  or horizontal applications with accessory kit (order separately)
- Concentric vent available
- Simple troubleshooting of gas valve
- Self-configuring and communicating control
- Slide out heat exchanger assembly and blower assembly

LIMITED WARRANTY *

- 10 year No Hassle Replacement™ limited warranty
- Lifetime heat exchanger limited warranty with timely registration
- 5 year parts limited warranty
  - With timely registration, an additional 5 year parts limited warranty
  * For residential applications only. See warranty certificate for complete details and restrictions, including warranty coverage for other applications.

Model Number	Input (BTUH)	Efficiency AFUE		ENERGY STAR®	Cooling Capacity CFM range @ .5 in. w.c. (125 Pa)	Dimensions H x W x D Inches (Millimeters)	Shipping Wt. Lbs (Kg)
		Upflow/Hz	Downflow				
F97CMN0601714A	60,000	97.0%	95.0%	X	510-1335	35 x 17-1/2 x 29-1/2 (889 x 445 x 750)	154 (69)
F97CMN0602120A	60,600	98.0%	96.7%	X	540-1905	35 x 21 x 29-1/2 (889 x 533 x 750)	159 (72)
F97CMN0801714A	80,000	97.0%	95.0%	X	490-1375	35 x 17-1/2 x 29-1/2 (889 x 445 x 750)	164 (74)
F97CMN0802120A	80,000	97.0%	95.0%	X	750-1945	35 x 21 x 29-1/2 (889 x 533 x 750)	169 (77)
F97CMN1002122A	100,000	97.0%	95.0%	X	715-2160	35 x 21 x 29-1/2 (889 x 533 x 750)	179 (80)
F97CMN1202422A	120,000	97.0%	95.0%	X	680-2185	35 x 24-1/2 x 29-1/2 (889 x 622 x 750)	203 (91)

MODEL NUMBER NOMENCLATURE

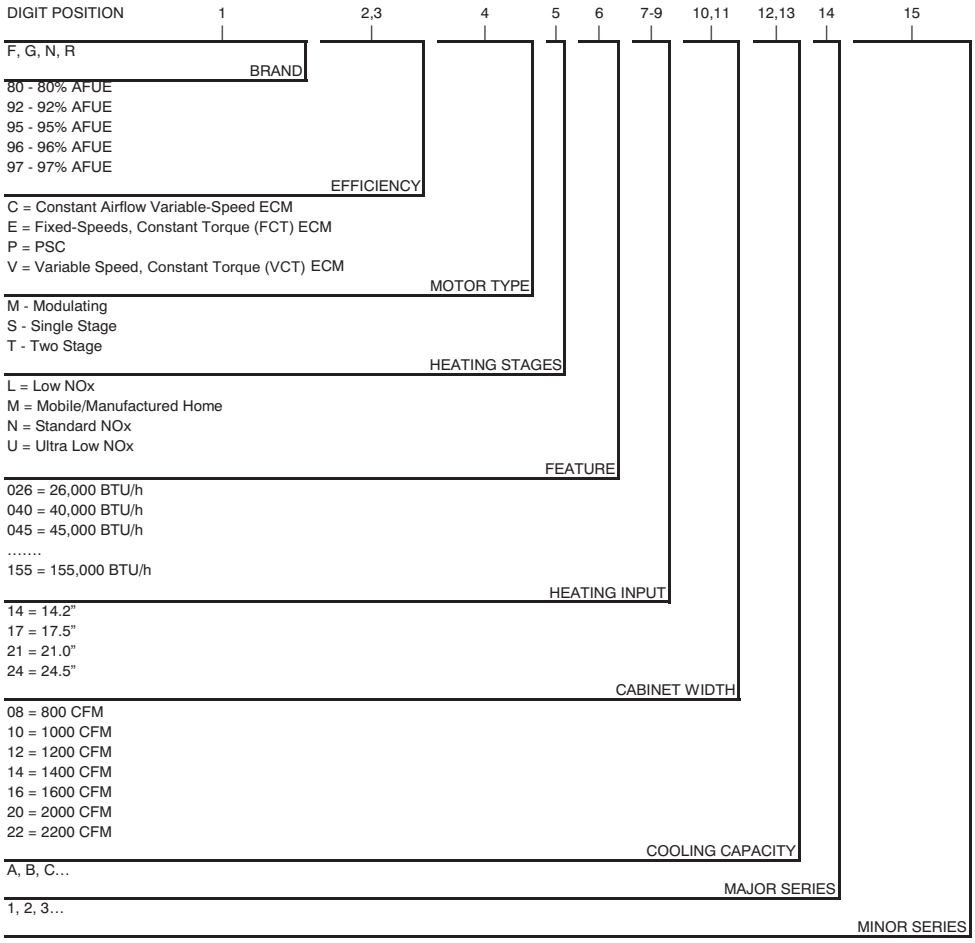

A190043

For California Residents:
For installation in SCAQMD only: This furnace does not meet the SCAQMD Rule 1111 14 ng/J NOx emission limit, and thus is subject to a mitigation fee of up to $450. This furnace is not eligible for the Clean Air Furnace Rebate Program: www.CleanAirFurnaceRebate.com

FURNACE COMPONENTS

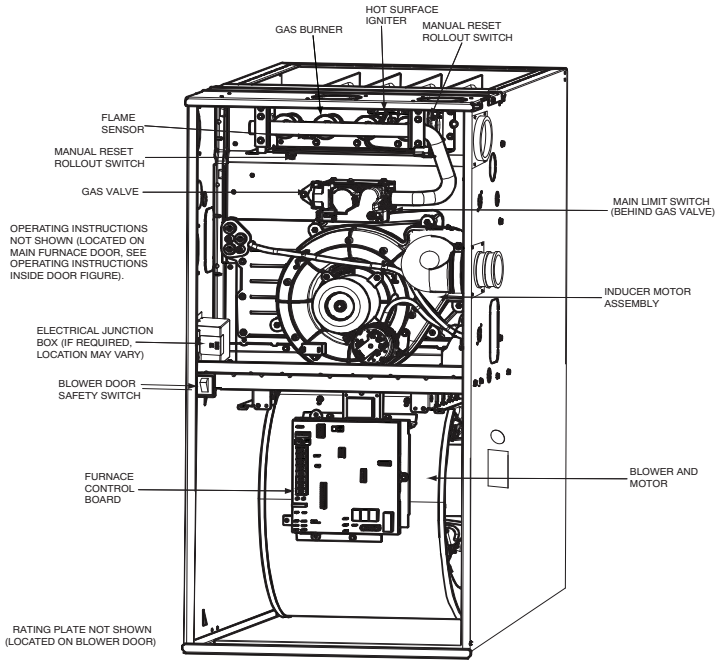

A190145

MINIMUM CLEARANCES TO COMBUSTIBLE MATERIALS FOR ALL UNITS - IN(MM)

POSITION	CLEARANCE
REAR	0
FRONT (Combustion air openings in furnace and in structure)	1 (25)
Required for service*	24 (610)
All Sides of Supply Plenum*	1 (25)
Sides	0
Vent	0
Top of Furnace	1 (25)

*. Consult your local building codes.

DIMENSIONAL DRAWING

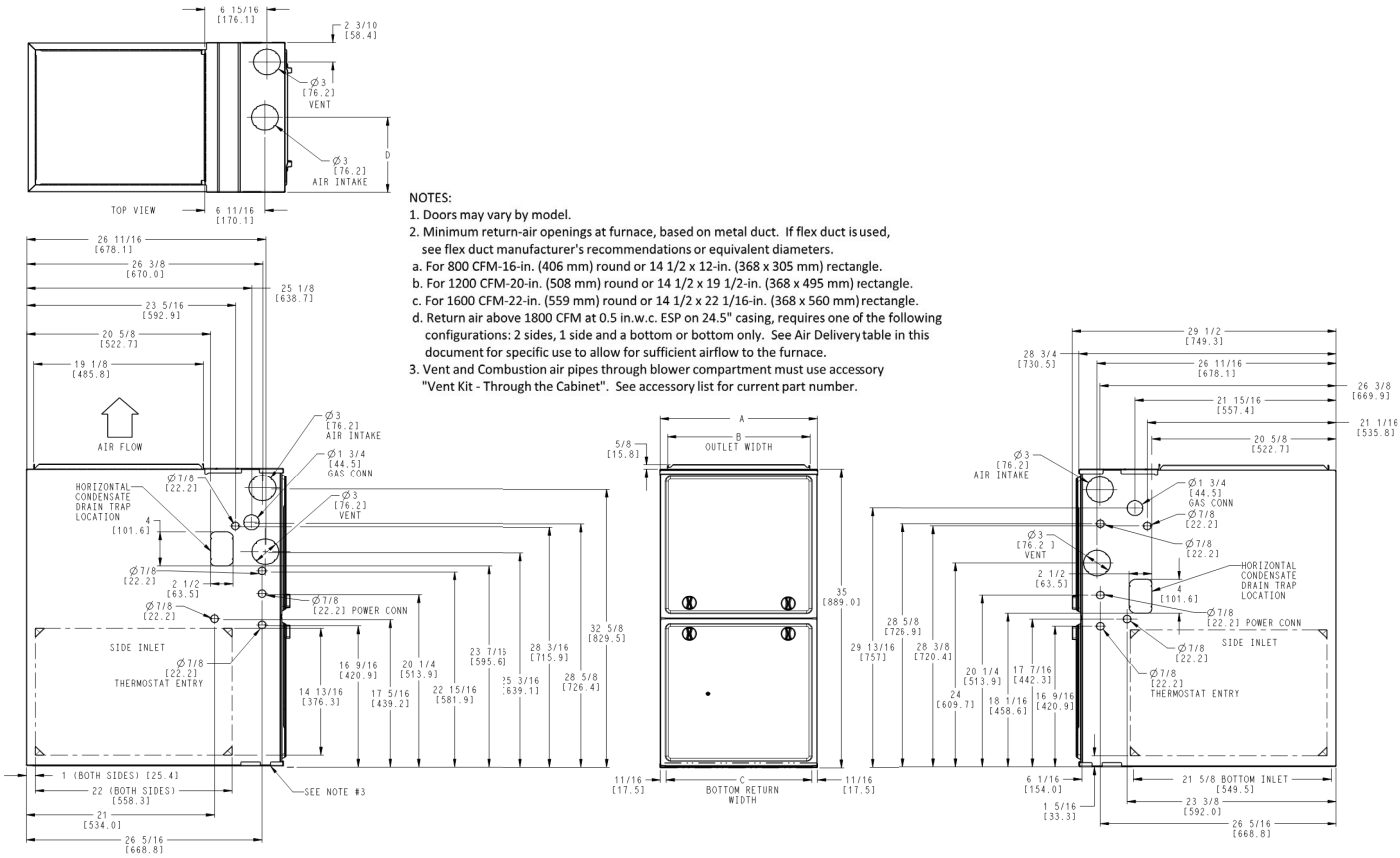

NOTES:
1. Doors may vary by model.
2. Minimum return-air openings at furnace, based on metal duct. If flex duct is used, see flex duct manufacturer's recommendations or equivalent diameters.
   a. For 800 CFM-16-in. (406 mm) round or 14 1/2 x 12-in. (368 x 305 mm) rectangle.
   b. For 1200 CFM-20-in. (508 mm) round or 14 1/2 x 19 1/2-in. (368 x 495 mm) rectangle.
   c. For 1600 CFM-22-in. (559 mm) round or 14 1/2 x 22 1/16-in. (368 x 560 mm) rectangle.
   d. Return air above 1800 CFM at 0.5 in.w.c. ESP on 24.5" casing, requires one of the following configurations: 2 sides, 1 side and a bottom or bottom only. See Air Delivery table in this document for specific use to allow for sufficient airflow to the furnace.
3. Vent and Combustion air pipes through blower compartment must use accessory "Vent Kit - Through the Cabinet". See accessory list for current part number.

NOTE: ALL DIMENSIONS IN INCH (MM)

U.S. ECCN: Not Subject to Regulation (N.S.R.)

A200327

FURNACE SIZE	A	B	C	D	SHIP WT.
	CABINET WIDTH	OUTLET WIDTH	BOTTOM INLET WIDTH	AIR INTAKE	LB (KG)
0601714	17-1/2 (445)	15-7/8 (403)	16 (406)	8-3/4 (222)	147.5 (66.9)
0602120	21 (533)	19-3/8 (492)	19-1/2 (495)	10-1/2 (267)	165.5 (75.1)
0801714	17-1/2 (445)	15-7/8 (403)	16 (406)	8-3/4 (222)	151.5 (68.7)
0802120	21 (533)	19-3/8 (492)	19-1/2 (495)	10-1/2 (267)	169.5 (76.9)
1002122	21 (533)	19-3/8 (492)	19-1/2 (495)	10-1/2 (267)	176.5 (80.0)
1202422	24-1/2 (622)	22-7/8 (581)	23 (584)	12-1/4 (311)	201.0 (91.2)

Manufacturer reserves the right to change, at any time, specifications and designs without notice and without obligations.

SPECIFICATIONS

Heating Capacity and Efficiency			0601714	0602120	0801714	0802120	1002122	1202422
Input	Maximum Heat	(BTUH)	60,000	60,600	80,000	80,000	100,000	120,000
	Intermediate Heat	(BTUH)	39,000	39,000	52,000	52,000	65,000	78,000
	Minimum Heat	(BTUH)	24,000	24,000	32,000	32,000	40,000	48,000
Output	Maximum Heat	(BTUH)	59,000	60,000	78,000	78,000	98,000	117,000
	Intermediate Heat	(BTUH)	38,000	39,000	51,000	51,000	64,000	76,000
	Minimum Heat	(BTUH)	24,000	24,000	31,000	31,000	39,000	47,000
Certified Temperature Rise Range ºF (ºC)		Maximum Heat	35 - 65 (19 - 36)	35 - 65 (19 - 36)	40 - 70 (22 - 39)	40 - 70 (22 - 39)	45 - 75 (25 - 42)	45 - 75 (25 - 42)
		Intermediate Heat	50 - 80 (28 - 44)	40 - 70 (22 - 39)	50 - 80 (28 - 44)	50 - 80 (28 - 44)	50 - 80 (28 - 44)	50 - 80 (28 - 44)
		Minimum Heat	35 - 65 (19 - 36)	25 - 55 (14-31)	35 - 65 (19 - 36)	35 - 65 (19 - 36)	35 - 65 (19 - 36)	35 - 65 (19 - 36)
Airflow Capacity and Blower Data								
Rated External Static Pressure (in. w.c.)		Heating	0.12	0.12	0.15	0.15	0.20	0.20
		Cooling	0.5	0.5	0.5	0.5	0.5	0.5
Airflow Delivery @ Rated ESP (CFM)		Maximum Heat	1075	1080	1500	1345	1575	1820
		Intermediate Heat	530	690	750	795	955	1100
		Minimum Heat	415	555	620	595	745	900
		Cooling	1335	1905	1375	1945	2160	2185
Cooling Capacity (tons)		400 CFM/ton	3	4.5	3.5	4.5	5.5	5.5
		350 CFM/ton	3.5	5.5	4	5.5	6	6
Direct-Drive Motor Type			Electronically Commutated Motor (ECM)					
Direct-Drive Motor HP			1/2	1	1/2	1	1	1
Motor Full Load Amps			7.7	12.8	7.7	12.8	12.8	12.8
RPM Range			300 - 1300					
Speed Selections			Variable (Communicating)					
Blower Wheel Dia x Width		in.	11 x 8	11 x 10	11 x 8	11 x 10	11 x 10	11 x 11
Air Filtration System			Field Supplied Filter					
Filter Used for Certified Watt Data*			325531-20*					
Electrical Data								
Input Voltage		Volts-Hertz-Phase	115-60-1					
Operating Voltage Range		Min-Max	104 -127					
Maximum Input Amps		Amps	9.0	14.1	9.0	14.1	14.1	14.1
Unit Ampacity		Amps	12.0	18.4	12.0	18.4	18.4	18.4
Minimum Wire Size		AWG	14	12	14	12	12	12
Maximum Wire Length @ Minimum Wire Size		Feet	30	31	30	31	31	31
		(M)	(9.4)	(9.5)	(9.4)	(9.5)	(9.5)	(9.5)
Maximum Fuse/Ckt Bkr (Time-Delay Type Recommended)		Amps	15	20	15	20	20	20
Transformer Capacity (24vac output)			40 VA					
External Control Power Available		Heating	27.9 VA					
		Cooling	34.6 VA					
Controls								
Gas Connection Size			1/2" - NPT					
Burners (Monoport)			3	3	4	4	5	6
Gas Valve (Redundant)		Manufacturer	White Rogers					
Minimum Inlet Gas pressure (in. wc)			4.5					
Maximum Inlet Gas pressure (in. wc)			13.6					
Manufactured (Mobile) Home Kit			not approved for MH use					
Twinning Kit			not approved for twinning					
Ignition Device			Silicon Nitride					
Heating Blower Control (Heating Off-Delay)			Adjustable: 90, 120, 150, 180 seconds					
Cooling Blower Control (Time Delay Relay)			90 seconds					
Communication System			ION™ Communicating Control SYST0101CW					
Thermostat Connections			R, W/W1, W2 Y/Y2, Y1, G, Com 24V, DHUM					
Accessory Connections			EAC (115vac); HUM (24vac); 1-stg AC (via Y/Y2)					

*. See Accessory List for part numbers available.

AIR DELIVERY - CFM

Cooling[4] and Heating Air Delivery - CFM (Bottom Return[5] With Filter)

(SW1-5 and SW4-3 set to OFF, except as indicated. See notes 1 and 2.)

Unit Size: 0601714	Clg/CF Switch settings			External Static Pressure (ESP)									
Clg Switches	**SW2-3**	**SW2-2**	**SW2-1**	**0.1**	**0.2**	**0.3**	**0.4**	**0.5**	**0.6**	**0.7**	**0.8**	**0.9**	**1.0**
Clg Default:	OFF	OFF	OFF	1060	1070	1080	1080	1075	1065	1050	1035	1025	1010
CF Switches	**SW3-3**	**SW3-2**	**SW3-1**										
Low-Clg Default:	OFF	OFF	OFF	545	530	520	525	510	See note 4				
Cooling Airflow (SW2) Low-Cooling Airflow (SW3)	OFF	OFF	ON	545	530	520	525	510	See note 4				
	OFF	ON	OFF	710	710	710	695	690	See note 4				
	OFF	ON	ON	875	880	890	895	895	890	885	880	870	855
	ON	OFF	OFF	1060	1070	1080	1080	1075	1065	1050	1035	1025	1010
	ON	OFF	ON	1235	1240	1250	1255	1255	1250	1230	1190	1155	1115
	ON	ON	OFF	1235	1240	1250	1255	1255	1250	1230	1190	1155	1115
	ON	ON	ON	1235	1240	1250	1255	1255	1250	1230	1190	1155	1115
	Maximum Clg Airflow[2]			1425	1425	1405	1370	1335	1300	1260	1225	1190	1155
CF Switches	**SW3-3**	**SW3-2**	**SW3-1**										
Cont. Fan Default:	OFF	OFF	OFF	545	530	520	525	510	See note 4				
Continuous Fan Airflow (SW3)	OFF	OFF	ON	545	530	520	525	510	See note 4				
	OFF	ON	OFF	710	710	710	695	690	See note 4				
	OFF	ON	ON	875	880	890	895	895	890	885	880	870	855
	ON	OFF	OFF	1060	1070	1080	1080	1075	1065	1050	1035	1025	1010
	ON	OFF	ON	1060	1070	1080	1080	1075	1065	1050	1035	1025	1010
	ON	ON	OFF	1060	1070	1080	1080	1075	1065	1050	1035	1025	1010
	ON	ON	ON	1060	1070	1080	1080	1075	1065	1050	1035	1025	1010
Heating (SW1)	**Maximum Heat Airflow[3]**			1075	1085	1095	1095	1090	1080	1065	1050	1035	1020
	Intermediate Heat Airflow[3]			535	515	505	515	495	See note 4				
	Minimum Heat Airflow[3]			420	410	415	400	380	See note 4				
Unit Size: 0602120	**Clg/CF Switch settings**			**External Static Pressure (ESP)**									
Clg Switches	**SW2-3**	**SW2-2**	**SW2-1**	**0.1**	**0.2**	**0.3**	**0.4**	**0.5**	**0.6**	**0.7**	**0.8**	**0.9**	**1.0**
Clg Default:	OFF	OFF	OFF	1735	1735	1725	1715	1700	1685	1665	1650	1625	1605
CF Switches	**SW3-3**	**SW3-2**	**SW3-1**										
Low-Clg Default:	OFF	OFF	OFF	540	525	525	520	540	See note 4				
Cooling Airflow (SW2) Low-Cooling Airflow (SW3)	OFF	OFF	ON	540	525	525	520	540	See note 4				
	OFF	ON	OFF	680	725	725	720	720	See note 4				
	OFF	ON	ON	925	915	910	895	900	890	875	865	860	855
	ON	OFF	OFF	1070	1075	1080	1070	1080	1075	1055	1045	1030	1020
	ON	OFF	ON	1215	1245	1235	1220	1220	1210	1200	1195	1185	1175
	ON	ON	OFF	1380	1385	1395	1390	1395	1390	1380	1365	1355	1340
	ON	ON	ON	1735	1735	1725	1715	1700	1685	1665	1650	1625	1605
	Maximum Clg Airflow[2]			1955	1950	1940	1925	1905	1885	1855	1815	1745	1685
CF Switches	**SW3-3**	**SW3-2**	**SW3-1**										
Cont. Fan Default:	OFF	OFF	OFF	540	525	525	520	540	See note 4				
Continuous Fan Airflow (SW3)	OFF	OFF	ON	540	525	525	520	540	See note 4				
	OFF	ON	OFF	680	725	725	720	720	See note 4				
	OFF	ON	ON	925	915	910	895	900	890	875	865	860	855
	ON	OFF	OFF	925	915	910	895	900	890	875	865	860	855
	ON	OFF	ON	925	915	910	895	900	890	875	865	860	855
	ON	ON	OFF	925	915	910	895	900	890	875	865	860	855
	ON	ON	ON	925	915	910	895	900	890	875	865	860	855
Heating (SW1)	**Maximum Heat Airflow[3]**			1080	1085	1095	1090	1095	1085	1070	1055	1045	1030
	Intermediate Heat Airflow[3]			685	725	730	725	730	See note 4				
	Minimum Heat Airflow[3]			560	555	555	550	565	See note 4				

Cooling[4] and Heating Air Delivery - CFM (Bottom Return[5] With Filter) (Continued)

(SW1-5 and SW4-3 set to OFF, except as indicated. See notes 1 and 2.)													
Unit Size: 0801714	**Clg/CF Switch settings**			**External Static Pressure (ESP)**									
Clg Switches	SW2-3	SW2-2	SW2-1	0.1	0.2	0.3	0.4	0.5	0.6	0.7	0.8	0.9	1.0
Clg Default:	OFF	OFF	OFF	1055	1065	1080	1075	1065	1050	1045	1035	1025	1005
CF Switches	**SW3-3**	**SW3-2**	**SW3-1**										
Low-Clg Default:	OFF	OFF	OFF	520	505	505	495	490	See note 4				
Cooling Airflow (SW2) Low-Cooling Airflow (SW3)	OFF	OFF	ON	520	505	505	495	490	See note 4				
	OFF	ON	OFF	665	685	680	660	665	See note 4				
	OFF	ON	ON	885	895	905	900	900	895	885	875	860	845
	ON	OFF	OFF	1055	1065	1080	1075	1065	1050	1045	1035	1025	1005
	ON	OFF	ON	1245	1245	1255	1255	1260	1255	1250	1235	1220	1185
	ON	ON	OFF	1245	1245	1255	1255	1260	1255	1250	1235	1220	1185
	ON	ON	ON	1245	1245	1255	1255	1260	1255	1250	1235	1220	1185
	Maximum Clg Airflow[2]			1520	1485	1450	1415	1375	1335	1300	1265	1225	1190
CF Switches	**SW3-3**	**SW3-2**	**SW3-1**										
Cont. Fan Default:	OFF	OFF	OFF	520	505	505	495	490	See note 4				
Continuous Fan Airflow (SW3)	OFF	OFF	ON	520	505	505	495	490	See note 4				
	OFF	ON	OFF	665	685	680	660	665	See note 4				
	OFF	ON	ON	885	895	905	900	900	895	885	875	860	845
	ON	OFF	OFF	885	895	905	900	900	895	885	875	860	845
	ON	OFF	ON	885	895	905	900	900	895	885	875	860	845
	ON	ON	OFF	885	895	905	900	900	895	885	875	860	845
	ON	ON	ON	885	895	905	900	900	895	885	875	860	845
Heating (SW1)	**Maximum Heat Airflow[3]**			1520	1485	1450	1415	1375	1335	1300	1265	1225	1190
	Intermediate Heat Airflow[3]			755	745	755	755	765	See note 4				
	Minimum Heat Airflow[3]			620	625	630	620	610	See note 4				
Unit Size: 0802120	**Clg/CF Switch settings**			**External Static Pressure (ESP)**									
Clg Switches	SW2-3	SW2-2	SW2-1	0.1	0.2	0.3	0.4	0.5	0.6	0.7	0.8	0.9	1.0
Clg Default:	OFF	OFF	OFF	1745	1755	1755	1760	1755	1750	1745	1725	1705	1685
CF Switches	**SW3-3**	**SW3-2**	**SW3-1**										
Low-Clg Default:	OFF	OFF	OFF	700	710	750	725	750	See note 4				
Cooling Airflow (SW2) Low-Cooling Airflow (SW3)	OFF	OFF	ON	700	710	750	725	750	See note 4				
	OFF	ON	OFF	830	860	870	890	960	See note 4				
	OFF	ON	ON	1045	1045	1060	1070	1070	1070	1095	1090	1080	1070
	ON	OFF	OFF	1215	1220	1245	1240	1235	1235	1225	1220	1235	1235
	ON	OFF	ON	1370	1370	1390	1390	1400	1395	1400	1390	1390	1385
	ON	ON	OFF	1745	1755	1755	1760	1755	1750	1745	1725	1705	1685
	ON	ON	ON	1745	1755	1755	1760	1755	1750	1745	1725	1705	1685
	Maximum Clg Airflow[2]			1920	1920	1945	1945	1945	1960	1950	1940	1915	1900
CF Switches	**SW3-3**	**SW3-2**	**SW3-1**										
Cont. Fan Default:	OFF	OFF	OFF	700	710	750	725	750	See note 4				
Continuous Fan Airflow (SW3)	OFF	OFF	ON	700	710	750	725	750	See note 4				
	OFF	ON	OFF	830	860	870	890	960	See note 4				
	OFF	ON	ON	1045	1045	1060	1070	1070	1070	1095	1090	1080	1070
	ON	OFF	OFF	1215	1220	1245	1240	1235	1235	1225	1220	1235	1235
	ON	OFF	ON	1370	1370	1390	1390	1400	1395	1400	1390	1390	1385
	ON	ON	OFF	1370	1370	1390	1390	1400	1395	1400	1390	1390	1385
	ON	ON	ON	1370	1370	1390	1390	1400	1395	1400	1390	1390	1385
Heating (SW1)	**Maximum Heat Airflow[3]**			1340	1355	1370	1385	1380	1385	1400	1400	1385	1380
	Intermediate Heat Airflow[3]			780	810	835	840	845	See note 4				
	Minimum Heat Airflow[3]			595	595	600	595	605	See note 4				

Cooling[4] and Heating Air Delivery - CFM (Bottom Return[5] With Filter) (Continued)

(SW1-5 and SW4-3 set to OFF, except as indicated. See notes 1 and 2.)													
Unit Size: 1002122	**Clg/CF Switch settings**			**External Static Pressure (ESP)**									
Clg Switches	**SW2-3**	**SW2-2**	**SW2-1**	**0.1**	**0.2**	**0.3**	**0.4**	**0.5**	**0.6**	**0.7**	**0.8**	**0.9**	**1.0**
Clg Default:	OFF	OFF	OFF	1820	1825	1840	1845	1840	1835	1825	1805	1780	1770
CF Switches	**SW3-3**	**SW3-2**	**SW3-1**										
Low-Clg Default:	OFF	OFF	OFF	750	740	745	730	715	See note 4				
Cooling Airflow (SW2) Low-Cooling Airflow (SW3)	OFF	OFF	ON	750	740	745	730	715	See note 4				
	OFF	ON	OFF	900	900	915	910	905	See note 4				
	OFF	ON	ON	1070	1075	1095	1095	1090	1085	1095	1080	1065	1070
	ON	OFF	OFF	1280	1285	1305	1305	1310	1305	1295	1300	1290	1285
	ON	OFF	ON	1440	1445	1465	1465	1470	1485	1480	1485	1475	1460
	ON	ON	OFF	1820	1825	1840	1845	1840	1835	1825	1805	1780	1770
	ON	ON	ON	2135	2140	2140	2135	2140	2130	2115	2100	2070	2015
	Maximum Clg Airflow[2]			2160	2165	2175	2170	2160	2150	2135	2120	2065	2020
CF Switches	**SW3-3**	**SW3-2**	**SW3-1**										
Cont. Fan Default:	OFF	OFF	OFF	750	740	745	730	715	See note 4				
Continuous Fan Airflow (SW3)	OFF	OFF	ON	750	740	745	730	715	See note 4				
	OFF	ON	OFF	900	900	915	910	905	See note 4				
	OFF	ON	ON	1070	1075	1095	1095	1090	1085	1095	1080	1065	1070
	ON	OFF	OFF	1280	1285	1305	1305	1310	1305	1295	1300	1290	1285
	ON	OFF	ON	1440	1445	1465	1465	1470	1485	1480	1485	1475	1460
	ON	ON	OFF	1440	1445	1465	1465	1470	1485	1480	1485	1475	1460
	ON	ON	ON	1440	1445	1465	1465	1470	1485	1480	1485	1475	1460
Heating (SW1)	**Maximum Heat Airflow[3]**			1570	1575	1595	1595	1600	1605	1600	1600	1590	1575
	Intermediate Heat Airflow[3]			950	955	965	975	970	See note 4				
	Minimum Heat Airflow[3]			755	745	750	735	720	See note 4				
Unit Size: 1202422	**Clg/CF Switch settings**			**External Static Pressure (ESP)**									
Clg Switches	SW2-3	SW2-2	SW2-1	0.1	0.2	0.3	0.4	0.5	0.6	0.7	0.8	0.9	1.0
Clg Default:	OFF	OFF	OFF	1850	1855	1860	1855	1850	1830	1805	1775	1750	1730
CF Switches	**SW3-3**	**SW3-2**	**SW3-1**										
Low-Clg Default:	OFF	OFF	OFF	930	925	915	900	885	See note 4				
Cooling Airflow (SW2) Low-Cooling Airflow (SW3)	OFF	OFF	ON	765	745	740	705	680	See note 4				
	OFF	ON	OFF	930	925	915	900	885	See note 4				
	OFF	ON	ON	1095	1100	1110	1105	1085	See note 4				
	ON	OFF	OFF	1265	1255	1265	1280	1275	1285	1270	1260	1250	1230
	ON	OFF	ON	1465	1455	1470	1465	1465	1470	1455	1450	1435	1415
	ON	ON	OFF	1850	1855	1860	1855	1850	1830	1805	1775	1750	1730
	ON	ON	ON	2200	2200	2200	2190	2185	2170	2145	2085	1990	1890
	Maximum Clg Airflow[2]			2200	2200	2200	2190	2185	2170	2145	2085	1990	1890
CF Switches	**SW3-3**	**SW3-2**	**SW3-1**										
Cont. Fan Default:	OFF	OFF	OFF	930	925	915	900	885	See note 4				
Continuous Fan Airflow (SW3)	OFF	OFF	ON	765	745	740	705	680	See note 4				
	OFF	ON	OFF	930	925	915	900	885	See note 4				
	OFF	ON	ON	1095	1100	1110	1105	1085	See note 4				
	ON	OFF	OFF	1265	1255	1265	1280	1275	1285	1270	1260	1250	1230
	ON	OFF	ON	1465	1455	1470	1465	1465	1470	1455	1450	1435	1415
	ON	ON	OFF	1465	1455	1470	1465	1465	1470	1455	1450	1435	1415
	ON	ON	ON	1465	1455	1470	1465	1465	1470	1455	1450	1435	1415
Heating (SW1)	**Maximum Heat Airflow[3]**			1815	1820	1825	1820	1815	1795	1775	1745	1720	1700
	Intermediate Heat Airflow[3]			1095	1100	1110	1105	1085	See note 4				
	Minimum Heat Airflow[3]			905	900	890	875	855	See note 4				

See NOTES following table

NOTES:

1. Nominal 350 CFM/ton cooling airflow is delivered with SW1-5 and SW4-3 set to OFF.
   Set SW1-5 to ON for nominal 400 CFM/ton (+15% airflow).
   Set SW4-3 to ON for nominal 325 CFM/ton (-7% airflow).
   Set both SW1-5 and SW4-3 to ON for nominal 370 CFM/ton (+7% airflow).
   This applies to Cooling and Low-Cooling airflow, but does not affect continuous fan airflow.

The above adjustments in airflow are subject to motor horsepower range/capacity.

2. Maximum cooling airflow is achieved when switches SW2-1, SW2-2, SW2-3 and SW1-5 are set to ON, and SW4-3 is set to OFF.
3. All heating CFM's are when low/medium heat rise adjustment switch (SW1-3) and comfort/efficiency adjustment switch (SW1-4) are both set to OFF.
4. Ductwork must be sized for high-heating CFM within the operational range of ESP. Operation within the blank areas of the chart is not recommended because high-heat operation will be above 1.0 ESP.
5. All airflow on 21" casing size furnaces are 5% less on side return only installations.
6. Return air above 1800 CFM on 24.5" casing sizes requires two sides, one side and bottom or bottom only, to allow sufficient airflow to the furnace.

ACCESSORIES								
PART NUMBER	**COMPONENT NAME**	**DESCRIPTION**	**0601714**	**0602120**	**0801714**	**0802120**	**1002122**	**1202422**
NAHB00101CT	EXTERNAL TRAP KIT	CONDENSATE TRAP	X	X	X	X	X	X
NAHA00110DA	DRAIN ACCESSORY	1/2" CPVC to 3/4" PVC (10 PACK)	X	X	X	X	X	X
NAHA002CV	VENT TERMINATION KIT	2" CONCENTRIC VENT	X	X	X	X	X	-
NAHA001CV		3" CONCENTRIC VENT	X	X	X	X	X	X
NAHA00101VC	INTERNAL VENT KIT	THROUGH THE CABINET	X	X	X	X	X	X
NAHA00301VT	DIRECT VENT TERMINATION KIT	2" BRACKET	X	X	X	X	X	-
NAHA00401VT		3" BRACKET	X	X	X	X	X	X
NAHA00101CK	INLET AIR PIPE COUPLING	COUPLING FOR POLYPROPYLENE VENT SYSTEMS	X	X	X	X	X	X
NAHA00101HV	HORIZONTAL INSTALLATION KIT	TRAP GROMMET (direct Vent application only)	X	X	X	X	X	X
NAHA00101HH	FREEZE PROTECT KIT	CONDENSATE DRAIN LINE - TAPE	X	X	X	X	X	X
NAHA00201HH	CONDENSATE FREEZE PROTECT KIT	CONDENSATE TRAP WITH HEAT PAD	X	X	X	X	X	X
NAHA01101SB	FLOOR BASE KIT	COMBUSTIBLE FLOOR	X	X	X	X	X	X
AGAGC9NPS01B*	GAS CONVERSION KIT	NATURAL TO PROPANE	X	X	X	X	X	X
AGAGC9PNS01B*		PROPANE TO NATURAL	X	X	X	X	X	X
1188594†	GAS VALVE TOWER PORT ADAPTER KIT	ADAPTER FOR GAS VALVE	X	X	X	X	X	X
325531-402†	WASHABLE FILTER (SINGLE PACK)	16" x 25" x 3/4" FILTER	X	-	X	-	-	-
325531-403†		20" x 25" x 3/4" FILTER	-	X	-	X	X	-
325531-404†		24" x 25" x3/4" FILTER	-	-	-	-	-	X
FHG1625-2†	BOTTOM FILTER RACK (WITHOUT FILTER)	16" x 25" RACK	X	-	X	-	-	-
FHG2025-2†		20" x 25" RACK	-	X	-	X	X	-
FHG2424-2†		24.5" x 24" RACK	-	-	-	-	-	X
NAHB00101CA	COIL ADAPTER KIT	WITH NO OFFSET	X	X	X	X	X	X
NAHB00201CA		WITH SINGLE OFFSET	X	X	X	X	X	X
NAHB00301CA		WITH DOUBLE OFFSET	X	X	X	X	X	X
NAHA01701RA	RETURN AIR KIT	17-1/2" wide	X	-	X	-	-	-
NAHA02101RA		21" wide	-	X	-	X	X	-
NAHA02401RA		24-1/2" wide	-	-	-	-	-	X
SYST0101CW	ION™ CONTROL SYSTEM	COMMUNICATING SYSTEM CONTROL	X	X	X	X	X	X
NAHA00101MS	MOTOR SIMULATOR	ECM MOTOR SIMULATOR KIT	X	X	X	X	X	X
NAHA001NK	CONDENSATE NEUTRALIZER KIT	NEUTRALIZES CONDENSATE	X	X	X	X	X	X

*. Factory authorized and field installed. Gas conversion kits are CSA recognized.
†. Order through FAST Part.
X = Accessory available

ORIFICES

Part Number	Gas Type	Orifice Size
1185612	Natural	42
1176928	Natural	43
1185574	Natural	44
1177213	Natural	45

Part Number	Gas Type	Orifice Size
1183809	Natural	46
1185613	Natural	47
1185614	Natural	48

Part Number	Gas Type	Orifice Size
1184256	Propane	54
1185615	Propane	55
1185616	Propane	56
1185617	Propane	1.25 mm
1185618	Propane	1.30 mm

© 2021 Carrier. All rights reserved.
Edition Date: 08/21
Catalog No: F97CMN31 -03PD
A Carrier Company www.GoArcoaire.com
Replaces: 440 31 4521 02
Manufacturer reserves the right to change, at any time, specifications and designs without notice and without obligations.