Comfortmaker®
Air Conditioning & Heating

N4H3

Performance Series
Product Specifications

EFFICIENT 13 SEER HEAT PUMP
ENVIRONMENTALLY SOUND R–410A REFRIGERANT
1–1/2 THRU 5 TONS SPLIT SYSTEM
208–230 Volt, 1–phase, 60 Hz
208–230 & 460 Volt, 3–phase, 60 Hz

REFRIGERATION CIRCUIT
- Scroll compressors on all models
- Suction line accumulator factory installed
- Bi–flow filter–drier included for field installation
- Integrated solid state control with Time–Temperature Defrost
- High and Low pressure switches
- Copper tube / aluminum fin coil

EASY TO INSTALL AND SERVICE
- Easy Access service valves on all models
- External high and low refrigerant service ports
- Only two screws to access control panel
- Factory charged with R–410A refrigerant

BUILT TO LAST
- Baked–on powder coat finish over galvanized steel
- Post–painted (black) coil fins
- Coated, weather–resistant cabinet screws
- Coated inlet grille with 2” (51mm) wire spacing, or 3/8” (10mm) “hail guard” wire spacing (3/8” standard on 3–phase models)

AHRI CERTIFIED™ www.ahridirectory.org

Use of the AHRI Certified TM Mark indicates a manufacturer’s participation in the program. For verification of certification for individual products, go to www.ahridirectory.org .

c UL US LISTED

WARRANTY*
- 5 year compressor limited warranty
- 5 year parts limited warranty (including compressor and coil)
  – With timely registration, an additional 5 year parts limited warranty (including compressor and coil)

* For owner occupied, residential applications only. See warranty certificate for complete details and restrictions, including warranty coverage for other applications.

Model Number	Size (tons)	Nominal Btu/hr	Min. Circuit Ampacity	Max. Fuse or Breaker	Operating Dimensions length x width x height in. (mm)	Operating/ Ship Weight (lbs)
N4H318*KF	1–1/2	18,000	11.8	20	23–1/8 x 23–1/8 x 28–7/16 (587 x 587 x 722)	119/137 (54/62)
N4H324*KF	2	24,000	16.8	25	23–1/8 x 23–1/8 x 31–13/16 (587 x 587 x 808)	124/142 (56/65)
N4H330*KF	2–1/2	30,000	21.1	30	31–3/16 x 31–3/16 x 28–7/16 (792 x 792 x 722)	149/170 (68/77)
N4H330GHF	2–1/2	30,000	13.6	20		
N4H336*KF	3	36,000	20.6	35	31–3/16 x 31–3/16 x 31–13/16 (792 x 792 x 808)	169/189 (78/86)
N4H336GHF	3	36,000	14.1	20		
N4H336GLF	3	36,000	7.9	10		
N4H342*KF	3–1/2	42,000	23.9	40	31–3/16 x 31–3/16 x 31–13/16 (792 x 792 x 808)	180/200 (82/91)
N4H342GHF	3–1/2	42,000	18.4	30		
N4H348*KF	4	48,000	28.7	45	31–3/16 x 31–3/16 x 28–7/16 (792 x 792 x 722)	208/228 (96/104)
N4H348GHF	4	48,000	18.7	30		
N4H348GLF	4	48,000	8.5	10		
N4H360*KF	5	60,000	34.1	50	35 x 35 x 28–15/16 (889 x 889 x 735)	250/282 (113/128)
N4H360GHF	5	60,000	21.1	30		
N4H360GLF	5	60,000	10.4	15		

* **A** = 2” (51mm) spacing inlet grille or
. **G** = 3/8” (10mm) spacing inlet grille

Specifications subject to change without notice.

OUTDOOR UNIT MODEL NUMBER IDENTIFICATION GUIDE (single phase)

Digit Position:	1	2	3	4	5, 6	7	8	9	10	11	12
Example Part Number:	**N**	**4**	**H**	**3**	**18**	**A**	**K**	**F**	**1**	**0**	**0**

BRANDING
- C = Comfortmaker Mainline
- N = Comfortmaker Entry

REFRIGERANT
- 4 = R–410A

TYPE
- A = Air Conditioner
- H = Heat Pump

NOMINAL EFFICIENCY
- 3 = 13 SEER
- 4 = 14 SEER

NOMINAL CAPACITY
- 18 = 18,000 BTUH = 1–1/2 tons
- 24 = 24,000 BTUH = 2 tons
- 30 = 30,000 BTUH = 2–1/2 tons
- 36 = 36,000 BTUH = 3 tons
- 42 = 42,000 BTUH = 3–1/2 tons
- 48 = 48,000 BTUH = 4 tons
- 60 = 60,000 BTUH = 5 tons

FEATURES
- A = 2” (51mm) spacing inlet grille
- G = 3/8” (10mm) spacing inlet grille
- C = Coastal

VOLTAGE
- K = 208–230–1–60
- H = 208–230–3–60
- L = 460–3–60

Sales Code

Engineering Revision

Extra Digit

Extra Digit

ACCESSORIES PART NUMBER IDENTIFICATION GUIDE

Digit Position:	1	2	3	4	5	6, 7	8, 9	10, 11
Example Part Number:	**N**	**A**	**S**	**A**	**0**	**0 1**	**01**	**C H**

BRANDING
- N = Non–Branded

PRODUCT GROUP
- A = Accessory

KIT USAGE
- S = Split System (AC & HP)

MAJOR SERIES
- A = Original
- B = 2nd Generation

REFRIGERANT
- 0 = Generic or Not Applicable
- 2 = R–22
- 4 = R–410A

Product Identifier Number

Package Quantity

Type of Kit (Example: CH = Crankcase Heater)

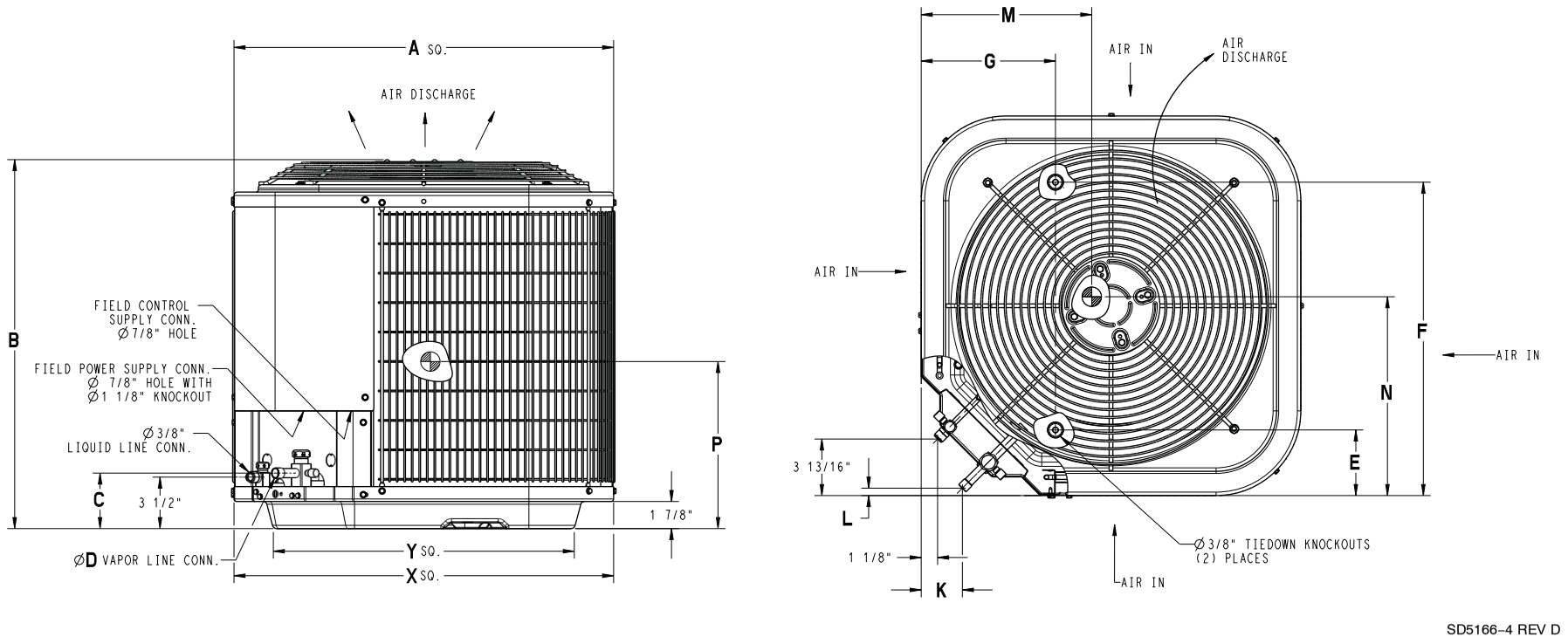

1. Allow 24” clearance to service side of unit. 48” above unit, 6“ on one side, 12” on remaining sides and 18” between units for proper airflow.
2. Minimum outdoor operating ambient in cooling mode is 55ºF, max 125ºF.
3. Center of Gravity ⊕

Model	Dimensions Inches (English)														
	A	B	C	D	E	F	G	K	L	M	N	P	Minimum Ground Mounting Pad X	Minimum Rooftop Mounting Pad Y	Shipping Dimensions L x W x H
N4H418*‡F	23–1/8	28–7/16	3–3/4	5/8	4–7/16	18–1/16	7–13/16	2–13/16	1/2	11–1/2	10–1/2	11–1/2	23–1/8 x 23–1/8	17–3/4 x 17–3/4	25–1/4 x 25–1/4 x 33–1/4
N4H424*‡F	23–1/8	31–13/16	3–3/4	3/4	4–7/16	18–1/16	7–13/16	2–13/16	1/2	11–1/2	10–1/2	12–1/2	23–1/8 x 23–1/8	17–3/4 x 17–3/4	25–1/4 x 25–1/4 x 36–5/8
N4H430*‡F	31–3/16	28–7/16	3–3/4	3/4	6–9/16	24–11/16	9–1/8	2–15/16	5/8	15	15	11–1/2	31–3/16 x 31–3/16	23 x 23	33–3/8 x 33–3/8 x 33–1/4
N4H436*‡F	31–3/16	31–13/16	3–7/8	7/8	6–9/16	24–11/16	9–1/8	2–15/16	5/8	15	15	12–1/2	31–3/16 x 31–3/16	23 x 23	33–3/8 x 33–3/8 x 36–5/8
N4H442*‡F	31–3/16	31–13/16	3–7/8	7/8	6–9/16	24–11/16	9–1/8	2–15/16	5/8	15	15	12–1/2	31–3/16 x 31–3/16	23 x 23	33–3/8 x 33–3/8 x 36–5/8
N4H448*‡F	31–3/16	2/–7/16	3–7/8	7/8	6–9/16	24–11/16	9–1/8	2–15/16	5/8	15	15	11–1/2	31–3/16 x 31–3/16	23 x 23	33–3/8 x 33–3/8 x 33–1/4
N4H460*‡F	35	28–15/16	3–7/8	7/8	6–9/16	28–7/16	9–1/8	2–15/16	5/8	17	16	12	35 x 35	26–3/4 x 26–3/4	37–1/8 x 37–1/8 x 33–1/4

***** = **A** 2” (51mm) spacing inlet grille, **G** 3/8” (10mm) spacing inlet grille

‡ = **K** 208–230 1–phase, **H** 208–230 3–phase, **L** 460 3–phase

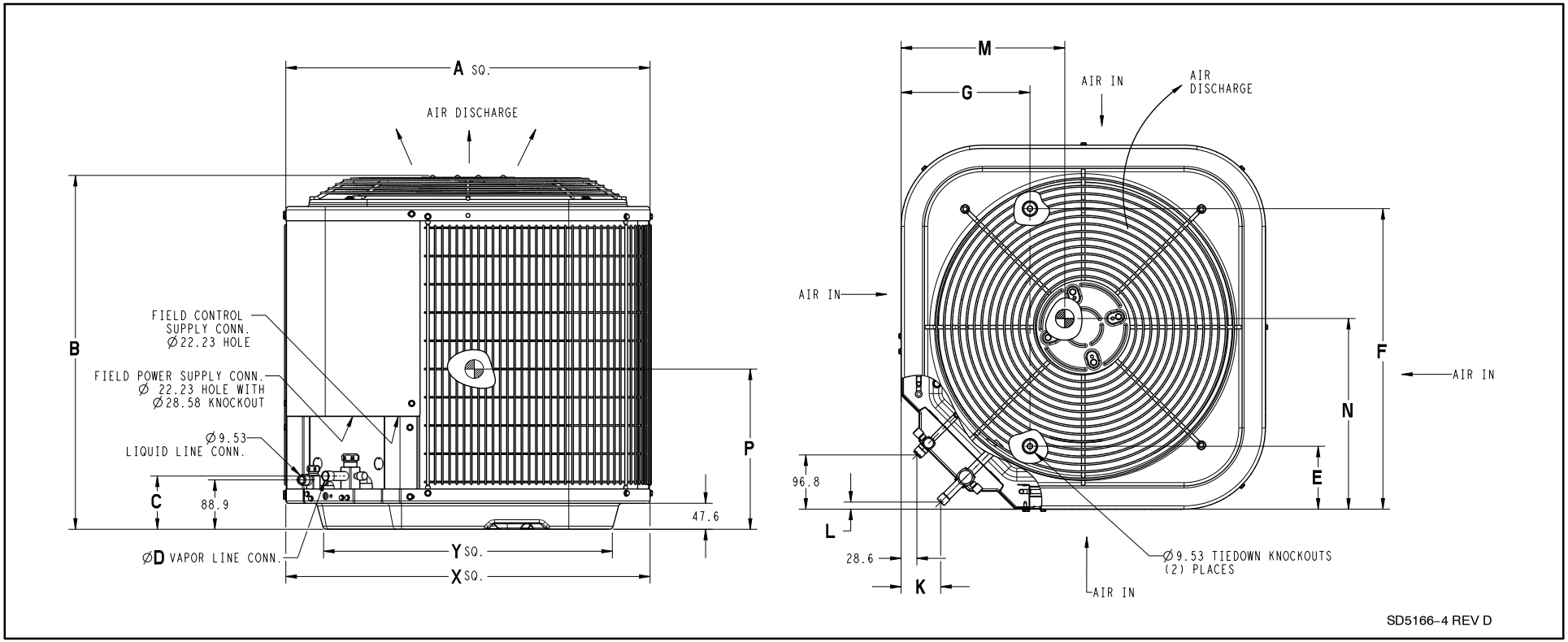

1. Allow 610 mm clearance to service side of unit. 1219 mm above unit, 152 mm on one side, 305 mm on remaining sides and 457 mm between units for proper airflow.
2. Minimum outdoor operating ambient in cooling mode is 13ºC, max 52ºC.
3. Center of Gravity ⊕

Model	Dimensions mm (SI Metric)														
	A	B	C	D	E	F	G	K	L	M	N	P	Minimum Ground Mounting Pad X	Minimum Rooftop Mounting Pad Y	Shipping Dimensions L x W x H
N4H418*‡F	587	722	95	16	113	459	198	71	13	292	267	292	587 x 587	451 x 451	642 x 642 x 844
N4H424*‡F	587	808	95	19	113	459	198	71	13	292	267	317	587 x 587	451 x 451	642 x 642 x 931
N4H430*‡F	792	722	95	19	167	627	232	75	16	381	381	292	792 x 792	583 x 583	847 x 847 x 844
N4H436*‡F	792	808	98	22	167	627	232	75	16	381	381	318	792 x 792	583 x 583	847 x 847 x 931
N4H442*‡F	792	808	98	22	167	627	232	75	16	381	381	318	792 x 792	583 x 583	847 x 847 x 931
N4H448*‡F	792	722	98	22	167	627	232	75	16	381	381	292	792 x 792	583 x 583	847 x 847 x 844
N4H460*‡F	889	735	98	22	167	722	232	75	16	432	406	305	889 x 889	680 x 680	943 x 943 x 844

***** = **A** 2” (51mm) spacing inlet grille, **G** 3/8” (10mm) spacing inlet grille

‡ = **K** 208–230 1–phase, **H** 208–230 3–phase, **L** 460 3–phase

PHYSICAL DATA (1−phase)							
MODEL SIZE	18AKF	24AKF	30AKF	36AKF	42AKF	48AKF	60AKF
	18GKF	24GKF	30GKF	36AKF	42GKF	48GKF	60GKF
Nominal Cooling Capacity (BTU/hr)	18,000	24,000	30,000	36,000	42,000	48,000	60,000
Nominal SEER	13.0	13.0	13.0	13.0	13.0	13.0	13.0
Sound Rating (dBA)**	69	73	74	73	77	80	77
ELECTRICAL DATA (208−230−1−60, voltage range 197V−253V)							
Minimum Circuit Ampacity − **MCA** (amps)	11.8	16.8	21.1	20.6	23.9	28.7	34.1
Maximum OverCurrent Protective device − **MOCP** (amps)	20	25	30	35	40	45	50
Compressor **RLA** (Rated Load Amps) **LRA** (Locked Rotor Amps)	9.0 48	12.8 58.3	16.0 77	15.6 70	18.0 96	21.8 99	26.3 134
FAN MOTOR							
Fan Motor **FLA** (Full Load Amps)	0.5	0.77	1.1	1.1	1.4	1.4	1.2
PSC Fan Motor HP	1/12	1/10	1/5	1/5	1/4	1/4	1/4
Fan RPM	1100	1100	1100	1100	1100	1100	800
Fan CFM	1800	2100	3000	3000	3400	3400	4000
REFRIGERANT DATA							
Liquid Line Connection Size in. (mm)	3/8 (10)	3/8 (10)	3/8 (10)	3/8 (10)	3/8 (10)	3/8 (10)	3/8 (10)
Vapor Line Connection Size in. (mm)	5/8 (16)	3/4 (19)	3/4 (19)	7/8 (22)	7/8 (22)	7/8 (22)	7/8 (22)
Recommended Line Set Liquid Tube Diameter in. (mm)	3/8 (10)	3/8 (10)	3/8 (10)	3/8 (10)	3/8 (10)	3/8 (10)	3/8 (10)
Recommended Line Set Vapor Tube Diameter in. (mm)	5/8 (16)*	3/4 (19)*	3/4 (19)*	7/8 (22)*	7/8 (22)*	7/8 (22)*	1−1/8 (29)*
Piston Size − Indoor Cooling (shipped loose with heat pump)	49	57	67	70	76	80	TXV
Piston Size − Outdoor Heating (shipped in liquid service valve)	42	49	55	57	63	65	76
Factory Charge R−410A lbs. (kg)	4.00 (1.81)	5.11 (2.32)	5.83 (2.64)	6.06 (2.75)	6.75 (3.06)	7.72 (3.50)	11.00 (4.99)
Required Subcooling °F (°C)	13 (7)	13 (7)	9 (5)	14 (8)	15 (8)	17 (9)	15 (8)
Coil Face Area ft^2 (m^2)	9.8 (1.07)	11.2 (1.04)	15.0 (1.39)	17.2 (1.60)	17.2 (1.60)	15.0 (1.39)	17.6 (1.64)
Coil Rows − fins per inch	1 − 20	1 − 20	1 − 20	1 − 20	1 − 20	2 − 20	2 − 20
Low Pressure Switch Open Pressure PSIG Close Pressure PSIG	 23 ± 5 55 ± 5	 23 ± 5 55 ± 5	 23 ± 5 55 ± 5	 23 ± 5 55 ± 5	 23 ± 5 55 ± 5	 23 ± 5 55 ± 5	 23 ± 5 55 ± 5
High Pressure Switch Open Pressure PSIG Close Pressure PSIG	 670 ± 10 470 ± 25	 670 ± 10 470 ± 25	 670 ± 10 470 ± 25	 670 ± 10 470 ± 25	 670 ± 10 470 ± 25	 670 ± 10 470 ± 25	 670 ± 10 470 ± 25

* Recommended Vapor Tube Line size is for standard installations. These recommendations may not apply to “Long Line” installations. When the total equivalent line length exceeds 80 feet (24.4m) or there is more than 20 feet (6.1m) vertical separation between indoor and outdoor units, consult the Long Line Application Guideline document before purchasing/installing line sets.

**Sound Rating tested in accordance with AHRI Standard 270−2008 (not listed with AHRI).

PHYSICAL DATA (3–phase)								
MODEL SIZE	**30GHF**	**36GHF**	**36GLF**	**42GHF**	**48GHF**	**48GLF**	**60GHF**	**60GLF**
Nominal Cooling Capacity (BTU/hr)	30,000	36,000	36,000	42,000	48,000	48,000	60,000	60,000
Nominal SEER	13.0	13.0	13.0	13.0	13.0	13.0	13.0	13.0
Sound Rating (dBA)**	74	75	75	79	80	80	77	77
ELECTRICAL DATA (208–230–3–60, voltage range 197V–253V) (460–3–60, voltage range 414V–506V)								
Minimum Circuit Ampacity – **MCA** (amps)	13.6	14.1	7.9	18.4	18.7	8.5	21.1	10.4
Maximum OverCurrent Protective device – **MOCP** (amps)	20	20	10	30	30	10	30	15
Compressor **RLA** (Rated Load Amps) **LRA** (Locked Rotor Amps)	10.0 71	10.4 73	5.8 38	13.6 83.1	13.8 83.1	6.2 41	15.9 110	7.8 52
FAN MOTOR								
Fan Motor **FLA** (Full Load Amps)	1.1	1.1	.6	1.4	1.4	0.7	1.2	.6
PSC Fan Motor HP	1/5	1/5	1/5	1/4	1/4	1/4	1/4	1/4
Fan RPM	1100	1100	1100	1100	1100	1100	800	800
Fan CFM	3000	3000	3000	3400	3400	3400	4000	4000
REFRIGERANT DATA								
Liquid Line Connection Size in. (mm)	3/8 (10)	3/8 (10)	3/8 (10)	3/8 (10)	3/8 (10)	3/8 (10)	3/8 (10)	3/8 (10)
Vapor Line Connection Size in. (mm)	3/4 (19)	7/8 (22)	7/8 (22)	7/8 (22)	7/8 (22)	7/8 (22)	7/8 (22)	7/8 (22)
Recommended Line Set Liquid Tube Diameter in. (mm)	3/8 (10)	3/8 (10)	3/8 (10)	3/8 (10)	3/8 (10)	3/8 (10)	3/8 (10)	3/8 (10)
Recommended Line Set Vapor Tube Diameter in. (mm)	3/4 (19)*	7/8 (22)*	7/8 (22)*	7/8 (22)*	7/8 (22)*	7/8 (22)*	1–1/8 (29)*	1–1/8 (29)*
Piston Size – Indoor Cooling (shipped loose with heat pump)	67	73	73	76	82	82	TXV	TXV
Piston Size – Outdoor Heating (shipped in liquid service valve)	55	57	57	63	65	65	76	76
Factory Charge R–410A lbs. (kg)	5.83 (2.64)	6.06 (2.75)	6.06 (2.75)	6.75 (3.06)	7.72 (3.50)	7.72 (3.50)	11.00 (4.99)	11.00 (4.99)
Required Subcooling °F (°C)	12 (7)	9 (5)	9 (5)	9 (5)	13 (7)	13 (7)	15 (8)	15 (8)
Coil Face Area ft^2 (m^2)	15.0 (1.39)	17.2 (1.60)	17.2 (1.60)	17.2 (1.60)	19.40 (1.80)	15.0 (1.39)	15.0 (1.39)	17.60 (1.64)
Coil Rows – fins per inch	1 – 20	1 – 20	1 – 20	1 – 20	2 – 20	2 – 20	2 – 20	2 – 20
Low Pressure Switch Open Pressure PSIG Close Pressure PSIG	 23 ± 5 55 ± 5	 23 ± 5 55 ± 5	 23 ± 5 55 ± 5	 23 ± 5 55 ± 5	 23 ± 5 55 ± 5	 23 ± 5 55 ± 5	 23 ± 5 55 ± 5	 23 ± 5 55 ± 5
High Pressure Switch Open Pressure PSIG Close Pressure PSIG	 670 ± 10 470 ± 25	 670 ± 10 470 ± 25	 670 ± 10 470 ± 25	 670 ± 10 470 ± 25	 670 ± 10 470 ± 25	 670 ± 10 470 ± 25	 670 ± 10 470 ± 25	 670 ± 10 470 ± 25

* Recommended Vapor Tube Line size is for standard installations. These recommendations may not apply to “Long Line” installations. When the total equivalent line length exceeds 80 feet (24.4m) or there is more than 20 feet (6.1m) vertical separation between indoor and outdoor units, consult the Long Line Application Guideline document before purchasing/installing line sets.

**Sound Rating tested in accordance with AHRI Standard 270–2008 (not listed with AHRI).

R–410A COOLING CAPACITY LOSS FOR VARIOUS LINE LENGTHS & TUBE DIAMETERS												
			Cooling Capacity Loss (%)									
			Total Equivalent Line Length, ft (m)									
			Standard Application			Long Line Application Requires Accessories						
Unit Nominal Size	Maximum Liquid Line Diameters in. (mm)	Acceptable Vapor Line Sizes in. (mm)	25 (7.6)	50 (15.2)	80 (24.4)	81–100 (25–30)	101–125 (31–38)	126–150 (38–46)	151–175 (46–53)	176–200 (54–61)	201–225 (61–69)	226–250 (69–76)
18 1 Stage R–410A HP	3/8 (10)	1/2 (13)	1	2	3	3	4	6	7	8	9	10
		5/8 (16)	0	0	1	1	1	1	2	2	3	3
		3/4 (19)	0	0	0	0	0	0	0	1	1	1
24 1 Stage R–410A HP	3/8 (10)	5/8 (16)	0	1	2	2	2	3	4	4	5	5
		3/4 (19)	0	0	0	0	1	1	1	1	2	2
		7/8 (22)	0	0	0	0	0	0	0	1	1	1
30 1 Stage R–410A HP	3/8 (10)	5/8 (16)	1	2	2	2	3	4	5	6	7	8
		3/4 (19)	0	0	0	1	1	1	2	2	2	3
		7/8 (22)	0	0	0	0	0	1	1	1	1	1
36 1 Stage R–410A HP	3/8 (10)	5/8 (16)	1	2	4	4	5	6	8	9	10	12
		3/4 (19)	0	1	1	1	2	2	3	3	4	4
		7/8 (22)	0	0	0	0	1	1	1	1	2	2
42 1 Stage R–410A HP	3/8 (10)	3/4 (19)	0	1	2	2	2	3	4	4	5	6
		7/8 (22)	0	0	1	1	1	1	2	2	2	3
		1–1/8 (29)	0	0	0	0	0	0	0	0	0	0
48 1 Stage R–410A HP	3/8 (10)	3/4 (19)	1	2	2	2	3	4	5	6	7	7
		7/8 (22)	0	1	1	1	2	2	2	3	3	4
		1–1/8 (29)	0	0	0	0	0	0	1	1	1	1
60 1 Stage R–410A HP	3/8 (10)	3/4 (19)	1	2	3	3	4	6	7	8	9	11
		7/8 (22)	0	1	1	1	2	2	3	4	4	5
		1–1/8 (29)	0	0	0	0	0	0	0	1	1	1

* Applications are considered "Long Line" if the total equivalent tubing length exceeds 80 feet (24.4m) or there is more than 20 foot (6.1m) vertical separation between indoor and outdoor units. These applications require additional accessories and system modifications for reliable system operation.

Applications in this area are "Long Line". Accessories are required as shown recommended on Long Line Applications Guideline.

Applications in shaded area may have height restrictions that limit allowable total equivalent length when outdoor unit is below indoor unit. See Long Line Applications Guideline.

A-Weighted Sound Power Level - Without Sound Shield								
Model	Standard Rating (dBA)	Typical Octave Band Spectrum (dBA without pure tone adjustment)						
		125	250	500	1000	2000	4000	8000
Unit Size - Series	Standard Rating (dBA)	Typical Octave Band Spectrum (dBA without pure tone adjustment)						
		125	250	500	1000	2000	4000	8000
N4H318A(G)KF	69	49.0	57.0	63.0	65.0	61.0	57.5	52.5
N4H324A(G)KF	73	51.0	59.5	66.0	68.5	63.5	59.0	53.0
N4H330A(G)KF	74	52.5	64.0	68.0	69.0	67.0	64.5	58.5
N4H330GHF	74	52.5	64.0	68.0	69.0	67.0	64.5	58.5
N4H336A(G)KF	73	50.5	62.5	67.0	68.5	66.5	63.5	58.0
N4H336AH(L)F	75	53.5	63.0	69.0	71.0	67.0	63.5	58.0
N4H342A(G)KF	77	55.0	65.0	71.0	72.0	70.0	67.0	59.5
N4H342GHF	79	55.0	67.0	71.0	74.5	70.0	67.0	60.0
N4H348A(G)KF	80	59.0	67.0	72.5	75.0	73.5	69.5	61.5
N4H348GH(L)F	80	59.5	69.5	74.0	76.0	72.5	69.5	64.5
N4H360A(G)K(H)(L)F	77	55.0	63.0	67.5	71.5	68.0	64.0	60.5
Note: Tested in accordance with AHRI Standard 270-2008 (not listed in AHRI).								
A-Weighted Sound Power Level - With Sound Shield								
N4H318A(G)KF	69	50.0	57.0	63.0	64.5	61.0	57.0	51.0
N4H324A(G)KF	71	51.5	59.0	65.5	67.5	63.0	58.5	53.0
N4H330A(G)KF	73	53.0	64.0	68.0	68.0	66.5	63.5	57.0
N4H330GHF	73	53.0	64.0	68.0	68.0	66.5	63.5	57.0
N4H336A(G)KF	73	52.0	63.0	66.5	68.0	65.5	62.5	56.5
N4H336AH(L)F	74	54.0	63.5	68.5	70.0	66.0	63.0	57.0
N4H342A(G)KF	77	55.0	65.5	71.0	72.0	70.0	66.0	59.5
N4H342GHF	78	56.0	67.0	71.0	73.5	69.5	66.5	60.0
N4H348A(G)KF	79	60.0	66.5	72.5	74.5	73.5	69.0	61.0
N4H348GH(L)F	79	58.5	69.0	73.5	74.5	71.5	68.0	62.0
N4H360A(G)K(H)(L)F	74	55.0	63.5	67.0	69.0	66.5	62.0	57.0
Note: Tested in accordance with AHRI Standard 270-2008 (not listed in AHRI).								

EXPANDED DATA (1–1/2 tons)

Cooling

EVAPORATOR AIR		CONDENSER ENTERING AIR TEMPERATURES deg F (C)																	
		75 (24)			85 (29)			95 (35)			105 (41)			115 (46)			125 (52)		
		Capacity MBtuh		Total System KW	Capacity MBtuh		Total System KW	Capacity MBtuh		Total System KW	Capacity MBtuh		Total System KW	Capacity MBtuh		Total System KW	Capacity MBtuh		Total System KW
CFM	EWB	Total	Sens		Total	Sens		Total	Sens		Total	Sens		Total	Sens		Total	Sens	
N4H318A(G)KF Outdoor Section With FEM4P18**A* Indoor Section																			
525	57	16.65	16.65	1.22	15.93	15.93	1.37	14.83	14.83	1.52	13.70	13.70	1.70	12.53	12.53	1.90	11.26	11.26	2.13
	62	17.30	15.33	1.22	16.38	14.89	1.37	15.05	14.24	1.52	13.73	13.73	1.70	12.55	12.55	1.90	11.28	11.28	2.13
	63	17.67	12.51	1.22	16.71	12.09	1.38	15.42	11.53	1.53	13.80	10.84	1.70	12.20	10.17	1.89	10.50	9.46	2.11
	67	19.21	13.04	1.23	18.18	12.64	1.39	17.04	12.18	1.56	15.53	11.58	1.73	13.75	10.89	1.92	11.97	10.20	2.14
	72	21.16	10.63	1.25	20.17	10.28	1.41	19.02	9.88	1.59	17.68	9.38	1.79	16.09	8.82	1.99	14.07	8.12	2.19
600	57	17.43	17.43	1.24	16.66	16.66	1.39	15.79	15.79	1.56	14.44	14.44	1.72	13.17	13.17	1.92	11.83	11.83	2.15
	62	17.78	16.48	1.24	16.83	15.99	1.39	15.81	15.81	1.56	14.46	14.46	1.72	13.20	13.20	1.92	11.85	11.85	2.15
	63	18.10	13.33	1.24	17.09	12.90	1.39	15.97	12.42	1.56	14.16	11.66	1.71	12.51	10.97	1.91	10.78	10.19	2.13
	67	19.65	13.89	1.25	18.59	13.51	1.41	17.40	13.04	1.58	16.09	12.53	1.77	14.10	11.76	1.94	12.26	11.03	2.16
	72	21.57	11.12	1.26	20.56	10.79	1.43	19.41	10.41	1.61	18.06	9.95	1.80	16.50	9.40	2.02	14.39	8.68	2.21
675	57	18.11	18.11	1.25	17.28	17.28	1.41	16.38	16.38	1.58	15.09	15.09	1.75	13.73	13.73	1.94	12.32	12.32	2.17
	62	18.22	17.49	1.25	17.31	17.31	1.41	16.41	16.41	1.58	15.12	15.12	1.75	13.75	13.75	1.95	12.34	12.34	2.17
	63	18.46	14.11	1.25	17.39	13.67	1.41	16.24	13.18	1.58	14.48	12.44	1.73	12.78	11.70	1.93	11.09	11.09	2.15
	67	19.98	14.69	1.26	18.91	14.33	1.42	17.69	13.87	1.60	16.35	13.35	1.79	14.38	12.58	1.96	12.51	11.79	2.18
	72	21.88	11.57	1.28	20.86	11.27	1.44	19.69	10.90	1.62	18.34	10.46	1.82	16.73	9.90	2.04	14.63	9.20	2.23

Heating

INDOOR AIR		OUTDOOR COIL ENTERING AIR TEMPERATURES deg F (C)																							
		-3 (–19)			7 (–14)			17 (–18)			27 (–3)			37 (3)			47 (8)			57 (14)			67 (19)		
		Capacity MBtuh		Total Sys-tem KW	Capacity MBtuh		Total Sys-tem KW	Capacity MBtuh		Total Sys-tem KW	Capacity MBtuh		Total Sys-tem KW	Capacity MBtuh		Total Sys-tem KW	Capacity MBtuh		Total Sys-tem KW	Capacity MBtuh		Total Sys-tem KW	Capacity MBtuh		Total Sys-tem KW
EDB	CFM	Total	Integ		Total	Integ		Total	Integ		Total	Integ		Total	Integ		Total	Integ		Total	Integ		Total	Integ	
N4H318A(G)KF Outdoor Section With FEM4P18**A* Indoor Section																									
65	525	5.18	4.76	1.09	7.28	6.69	1.13	9.55	8.71	1.18	12.03	10.68	1.23	14.44	13.14	1.28	16.94	16.94	1.33	19.01	19.01	1.38	20.73	20.73	1.42
	600	5.26	4.84	1.09	7.38	6.78	1.13	9.73	8.87	1.17	12.17	10.81	1.21	14.62	13.31	1.26	16.98	16.98	1.30	18.87	18.87	1.34	20.34	20.34	1.36
	675	5.33	4.91	1.10	7.47	6.87	1.13	10.00	9.11	1.17	12.28	10.91	1.20	14.77	13.44	1.25	16.95	16.95	1.27	18.64	18.64	1.30	19.82	19.82	1.32
70	525	4.93	4.53	1.14	7.02	6.45	1.19	9.26	8.44	1.24	11.80	10.48	1.29	14.18	12.91	1.35	16.72	16.72	1.40	18.81	18.81	1.45	20.55	20.55	1.50
	600	5.01	4.61	1.14	7.13	6.55	1.19	9.40	8.57	1.23	11.95	10.61	1.28	14.36	13.07	1.32	16.80	16.80	1.37	18.74	18.74	1.41	20.27	20.27	1.44
	675	5.08	4.67	1.15	7.22	6.63	1.19	9.52	8.68	1.23	12.06	10.71	1.27	14.51	13.21	1.31	16.81	16.81	1.34	18.58	18.58	1.37	19.88	19.88	1.40
75	525	4.64	4.27	1.19	6.74	6.20	1.24	8.97	8.18	1.29	11.57	10.27	1.36	13.92	12.67	1.41	16.49	16.49	1.48	18.58	18.58	1.53	20.34	20.34	1.57
	600	4.73	4.35	1.19	6.85	6.30	1.24	9.11	8.30	1.29	11.72	10.40	1.34	14.10	12.83	1.39	16.59	16.59	1.44	18.57	18.57	1.48	20.12	20.12	1.51
	675	4.80	4.42	1.20	6.94	6.38	1.24	9.22	8.41	1.28	11.83	10.51	1.33	14.25	12.96	1.37	16.64	16.64	1.41	18.48	18.48	1.45	19.85	19.85	1.47

MULTIPLIERS FOR COMBINATION RATINGS

COOLING

COOLING INDOOR MODEL	CAPACITY	POWER	FURNACE MODEL
*FEM4P18**A*	1.00	1.00	
FCM4X24****	1.03	0.95	
FEA4X18**A*	1.03	1.02	
FEA4X24**A*	1.03	0.99	
FEM4P24**A*	1.02	0.98	
FEM4X18**A*	1.03	0.99	
FEM4X18**B*	1.00	0.96	
FEM4X24**B*	1.02	0.98	
FVM4X24****	1.03	0.95	
FXM4X18**A*	1.03	0.95	
FXM4X24**A*	1.03	0.97	
EA*4X24*14A*	1.03	0.97	*8MX*0451408**
EHD4X24A**	1.03	0.97	*8MX*0451408**
EN(A,D)4X18*14**	1.03	0.98	*8MX*0451408**
EN(A,D)4X24*14**	1.03	0.97	*8MX*0451408**
EA*4X24*14A*	1.02	0.96	*8MV*0701412**
EHD4X24A**	1.03	0.97	*8MV*0701412**
EN(A,D)4X18*14**	1.02	0.97	*8MV*0701412**
EN(A,D)4X24*14**	1.03	0.97	*8MV*0701412**
EA*4X24*17A*	1.03	0.97	*8MV*0901716**
EHD4X24A**	1.03	0.97	*8MV*0901716**
EN(A,D)4X24*17**	1.03	0.97	*8MV*0901716**
ENH4X24*17**	1.03	0.97	*8MV*0901716**
EA*4X24*14A*	1.02	1.02	*9MX*0401410A**
EHD4X24A**	1.02	0.98	*9MX*0401410A**
EA*4X24*14A*	1.03	1.01	*9MV*0401410A**
EHD4X24A**	1.03	1.01	*9MV*0401410A**
EN(A,D)4X24*14**	1.03	1.00	*9MV*0401410A**
EA*4X24*17A*	1.03	0.97	*9MV*0601714A**
EHD4X24A**	1.03	0.97	*9MV*0601714A**
EN(A,D)4X24*17**	1.03	0.97	*9MV*0601714A**
ENH4X24*17**	1.03	0.97	*9MV*0601714A**
EA*4X24*17A*	1.03	0.97	*9MV*0801716A**
EHD4X24A**	1.03	0.97	*9MV*0801716A**
EN(A,D)4X24*17**	1.03	0.97	*9MV*0801716A**
ENH4X24*17**	1.03	0.97	*9MV*0801716A**
EHD4X24A**	1.03	0.97	*9MV*0802120A**
EHD4X24A**	1.03	0.97	*9MV*1002120A**
EHD4X24A**	1.03	0.97	*9MV*1202422A**
EA*4X24*17A*	1.03	0.97	*9MA*0601714A**
EHD4X24A**	1.03	0.97	*9MA*0601714A**
EN(A,D)4X24*17**	1.03	0.97	*9MA*0601714A**
ENH4X24*17**	1.03	0.97	*9MA*0601714A**
EA*4X24*17A*	1.02	0.96	*9MA*0801714A**
EHD4X24A**	1.03	0.97	*9MA*0801714A**
EN(A,D)4X24*17**	1.02	0.96	*9MA*0801714A**
ENH4X24*17**	1.02	0.96	*9MA*0801714A**
EHD4X24A**	1.03	0.97	*9MA*0602120A**
EA*4X24*17A*	1.03	0.97	NOMV106D12*
EHD4X24A**	1.03	0.97	NOMV106D12*
EN(A,D)4X24*17**	1.03	0.97	NOMV106D12*
ENH4X24*17**	1.03	0.97	NOMV106D12*
EA*4X24*17A*	1.03	0.97	OLV098A12A
EN(A,D)4X24*17**	1.03	0.97	OLV098A12A
EA*4X24*17A*	1.03	0.97	OMV098J12A
EHD4X24A**	1.03	0.97	OMV098J12A
EN(A,D)4X24*17**	1.03	0.97	OMV098J12A
ENH4X24*17**	1.03	0.97	OMV098J12A
EA*4X24*14A*	1.03	0.97	MV08**14C*
EHD4X24A**	1.03	0.95	MV08**14C*
EN(A,D)4X18*14**	1.03	0.97	MV08**14C*
EN(A,D)4X24*14**	1.03	0.97	MV08**14C*

HEATING

HEATING INDOOR MODEL	CAPACITY	POWER	FURNACE MODEL
*FEM4P18**A*	1.00	1.00	
FCM4X24****	0.95	0.96	
FEA4X18**A*	0.99	1.00	
FEA4X24**A*	0.97	0.96	
FEM4P24**A*	1.00	1.00	
FEM4X18**A*	1.01	1.01	
FEM4X18**B*	1.00	1.01	
FEM4X24**B*	1.00	1.00	
FVM4X24****	0.94	0.95	
FXM4X18**A*	0.96	0.95	
FXM4X24**A*	0.96	0.95	
EA*4X24*14A*	0.98	0.97	*8MX*0451408**
EHD4X24A**	0.97	0.97	*8MX*0451408**
EN(A,D)4X18*14**	0.99	0.99	*8MX*0451408**
EN(A,D)4X24*14**	0.98	0.97	*8MX*0451408**
EA*4X24*14A*	0.98	1.00	*8MV*0701412**
EHD4X24A**	0.97	0.99	*8MV*0701412**
EN(A,D)4X18*14**	0.99	1.01	*8MV*0701412**
EN(A,D)4X24*14**	0.98	0.99	*8MV*0701412**
EA*4X24*17A*	0.98	0.99	*8MV*0901716**
EHD4X24A**	0.97	0.98	*8MV*0901716**
EN(A,D)4X24*17**	0.98	0.98	*8MV*0901716**
ENH4X24*17**	0.98	0.98	*8MV*0901716**
EA*4X24*14A*	0.98	1.00	*9MX*0401410A**
EHD4X24A**	0.96	1.00	*9MX*0401410A**
EA*4X24*14A*	0.98	1.00	*9MV*0401410A**
EHD4X24A**	0.97	1.00	*9MV*0401410A**
EN(A,D)4X24*14**	0.99	1.00	*9MV*0401410A**
EA*4X24*17A*	0.98	0.96	*9MV*0601714A**
EHD4X24A**	0.96	0.98	*9MV*0601714A**
EN(A,D)4X24*17**	0.98	0.97	*9MV*0601714A**
ENH4X24*17**	0.98	0.97	*9MV*0601714A**
EA*4X24*17A*	0.98	0.95	*9MV*0801716A**
EHD4X24A**	0.96	0.96	*9MV*0801716A**
EN(A,D)4X24*17**	0.98	0.96	*9MV*0801716A**
ENH4X24*17**	0.98	0.96	*9MV*0801716A**
EHD4X24A**	0.96	0.95	*9MV*0802120A**
EHD4X24A**	0.96	0.95	*9MV*1002120A**
EHD4X24A**	0.96	0.95	*9MV*1202422A**
EA*4X24*17A*	0.98	0.99	*9MA*0601714A**
EHD4X24A**	0.97	0.99	*9MA*0601714A**
EN(A,D)4X24*17**	0.98	0.99	*9MA*0601714A**
ENH4X24*17**	0.98	0.99	*9MA*0601714A**
EA*4X24*17A*	0.98	1.00	*9MA*0801714A**
EHD4X24A**	0.97	0.99	*9MA*0801714A**
EN(A,D)4X24*17**	0.98	0.99	*9MA*0801714A**
ENH4X24*17**	0.98	0.99	*9MA*0801714A**
EHD4X24A**	0.97	0.98	*9MA*0602120A**
EA*4X24*17A*	0.98	0.98	NOMV106D12*
EHD4X24A**	0.97	0.98	NOMV106D12*
EN(A,D)4X24*17**	0.98	0.97	NOMV106D12*
ENH4X24*17**	0.98	0.97	NOMV106D12*
EA*4X24*17A*	0.98	0.97	OLV098A12A
EN(A,D)4X24*17**	0.98	0.96	OLV098A12A
EA*4X24*17A*	0.98	0.96	OMV098J12A
EHD4X24A**	0.97	0.96	OMV098J12A
EN(A,D)4X24*17**	0.98	0.96	OMV098J12A
ENH4X24*17**	0.98	0.96	OMV098J12A
EA*4X24*14A*	0.99	0.98	MV08**14C*
EHD4X24A**	0.97	0.96	MV08**14C*
EN(A,D)4X18*14**	0.99	0.99	MV08**14C*
EN(A,D)4X24*14**	0.99	0.97	MV08**14C*

EXPANDED DATA (2 tons)

Cooling

EVAPORATOR AIR		CONDENSER ENTERING AIR TEMPERATURES deg F (C)																	
		75 (24)			85 (29)			95 (35)			105 (41)			115 (46)			125 (52)		
		Capacity MBtuh		Total System KW	Capacity MBtuh		Total System KW	Capacity MBtuh		Total System KW	Capacity MBtuh		Total System KW	Capacity MBtuh		Total System KW	Capacity MBtuh		Total System KW
CFM	EWB	Total	Sens		Total	Sens		Total	Sens		Total	Sens		Total	Sens		Total	Sens	
N4H324A(G)KF Outdoor Section With FEM4P24**A* Indoor Section																			
700	57	22.27	22.27	1.62	21.36	21.36	1.82	20.01	20.01	2.01	18.55	18.55	2.25	17.03	17.03	2.51	15.40	15.40	2.81
	62	23.17	20.79	1.63	22.02	20.23	1.83	20.58	19.52	2.03	18.58	18.58	2.25	17.06	17.06	2.51	15.42	15.42	2.81
	63	23.65	16.96	1.63	22.45	16.42	1.83	21.09	15.82	2.05	18.86	14.86	2.25	16.76	13.96	2.50	14.55	13.00	2.79
	67	25.62	17.65	1.66	24.33	17.13	1.86	22.96	16.57	2.09	21.15	15.84	2.32	18.89	14.94	2.55	16.55	14.01	2.83
	72	28.04	14.27	1.70	26.88	13.86	1.91	25.54	13.37	2.14	23.99	12.83	2.40	22.07	12.12	2.68	19.47	11.20	2.92
800	57	23.24	23.24	1.65	22.28	22.28	1.86	21.18	21.18	2.08	19.52	19.52	2.29	17.86	17.86	2.55	16.14	16.14	2.85
	62	23.74	22.26	1.66	22.55	21.65	1.86	21.23	21.23	2.08	19.55	19.55	2.29	17.89	17.89	2.55	16.17	16.17	2.85
	63	24.17	18.01	1.67	22.92	17.47	1.87	21.53	16.86	2.08	19.35	15.93	2.29	17.13	14.97	2.54	14.90	13.98	2.82
	67	26.14	18.72	1.69	24.87	18.26	1.90	23.40	17.68	2.13	21.78	17.03	2.37	19.36	16.08	2.59	16.93	15.10	2.87
	72	28.50	14.87	1.73	27.33	14.48	1.94	25.98	14.01	2.17	24.43	13.49	2.43	22.48	12.81	2.71	19.90	11.92	2.97
900	57	24.05	24.05	1.69	23.03	23.03	1.89	21.91	21.91	2.12	20.37	20.37	2.34	18.61	18.61	2.60	16.76	16.76	2.89
	62	24.25	23.56	1.69	23.07	23.07	1.89	21.94	21.94	2.12	20.40	20.40	2.34	18.64	18.64	2.60	16.81	16.81	2.89
	63	24.60	19.04	1.69	23.29	18.48	1.90	21.88	17.87	2.12	19.70	16.93	2.32	17.49	15.95	2.57	15.23	14.83	2.85
	67	26.54	19.73	1.72	25.26	19.31	1.93	23.76	18.77	2.16	22.10	18.10	2.41	19.74	17.16	2.63	17.27	16.11	2.90
	72	28.85	15.42	1.76	27.68	15.06	1.97	26.31	14.61	2.20	24.75	14.11	2.46	22.87	13.52	2.74	20.25	12.62	3.01

Heating

INDOOR AIR		OUTDOOR COIL ENTERING AIR TEMPERATURES deg F (C)																							
		-3 (–19)			7 (–14)			17 (–18)			27 (–3)			37 (3)			47 (8)			57 (14)			67 (19)		
		Capacity MBtuh		Total Sys-tem KW	Capacity MBtuh		Total Sys-tem KW	Capacity MBtuh		Total Sys-tem KW	Capacity MBtuh		Total Sys-tem KW	Capacity MBtuh		Total Sys-tem KW	Capacity MBtuh		Total Sys-tem KW	Capacity MBtuh		Total Sys-tem KW	Capacity MBtuh		Total Sys-tem KW
EDB	CFM	Total	Integ		Total	Integ		Total	Integ		Total	Integ		Total	Integ		Total	Integ		Total	Integ		Total	Integ	
N4H324A(G)KF Outdoor Section With FEM4P24**A* Indoor Section																									
65	700	7.98	7.35	1.45	10.55	9.70	1.54	13.20	12.03	1.60	16.25	14.43	1.67	19.15	17.43	1.73	22.05	22.05	1.80	25.36	25.36	1.89	28.21	28.21	1.97
	800	8.15	7.50	1.46	10.74	9.87	1.54	13.42	12.23	1.60	16.65	14.78	1.65	19.39	17.64	1.70	22.34	22.34	1.76	25.60	25.60	1.83	28.25	28.25	1.91
	900	8.29	7.63	1.47	10.91	10.02	1.55	13.60	12.40	1.60	16.82	14.94	1.65	19.58	17.82	1.69	22.59	22.59	1.74	25.74	25.74	1.80	28.20	28.20	1.86
70	700	7.54	6.94	1.51	10.14	9.31	1.61	12.78	11.66	1.67	15.64	13.89	1.74	18.85	17.15	1.82	21.72	21.72	1.89	24.99	24.99	1.98	27.87	27.87	2.07
	800	7.71	7.09	1.52	10.32	9.49	1.61	13.00	11.85	1.67	15.96	14.18	1.73	19.08	17.36	1.79	22.00	22.00	1.85	25.27	25.27	1.93	27.95	27.95	2.00
	900	7.85	7.22	1.53	10.49	9.64	1.62	13.19	12.03	1.67	16.26	14.44	1.72	19.29	17.55	1.78	22.24	22.24	1.83	25.44	25.44	1.89	27.94	27.94	1.96
75	700	7.08	6.51	1.58	9.68	8.89	1.68	12.36	11.27	1.75	15.19	13.49	1.82	18.59	16.91	1.91	21.39	21.39	1.98	24.61	24.61	2.08	27.51	27.51	2.17
	800	7.24	6.66	1.59	9.86	9.06	1.68	12.57	11.46	1.75	15.45	13.73	1.81	18.81	17.11	1.88	21.66	21.66	1.95	24.91	24.91	2.02	27.62	27.62	2.10
	900	7.38	6.79	1.60	10.03	9.22	1.69	12.76	11.63	1.75	15.68	13.92	1.80	18.99	17.28	1.87	21.90	21.90	1.92	25.11	25.11	1.99	27.65	27.65	2.06

MULTIPLIERS FOR COMBINATION RATINGS

COOLING			
COOLING INDOOR MODEL	CAPACITY	POWER	FURNACE MODEL
*FEM4P24**A*	1.00	1.00	
FCM4X24****	1.03	0.94	
FEA4X24**A*	1.03	1.01	
FEA4X30**A*	1.03	0.98	
FEM4P30**A*	1.03	0.96	
FEM4X24**A*	1.03	0.98	
FEM4X24**B*	1.00	0.97	
FEM4X30**A*	1.03	0.96	
FEM4X30**B*	1.03	0.96	
FS(M,U)4P24**A*	1.03	1.01	
FVM4X24****	1.03	0.94	
FXM4X24**A*	1.03	0.96	
FXM4X30**A*	1.03	0.98	
EA*4X24*14A*	1.03	0.98	*8MX*0451408**
EA*4X30*14A*	1.03	0.96	*8MX*0451408**
EHD4X24A**	1.03	0.96	*8MX*0451408**
EHD4X30A**	1.03	0.96	*8MX*0451408**
EN(A,D)4X24*14**	1.03	0.98	*8MX*0451408**
EN(A,D)4X30*14**	1.03	0.96	*8MX*0451408**
EA*4X24*14A*	1.03	0.96	*8MV*0701412**
EA*4X30*14A*	1.03	0.96	*8MV*0701412**
EHD4X24A**	1.03	0.96	*8MV*0701412**
EHD4X30A**	1.03	0.96	*8MV*0701412**
EN(A,D)4X24*14**	1.03	0.96	*8MV*0701412**
EN(A,D)4X30*14**	1.03	0.96	*8MV*0701412**
EA*4X24*17A*	1.03	0.96	*8MV*0901716**
EA*4X30*17A*	1.03	0.96	*8MV*0901716**
EHD4X24A**	1.03	0.96	*8MV*0901716**
EHD4X30A**	1.03	0.94	*8MV*0901716**
EN(A,D)4X24*17**	1.03	0.96	*8MV*0901716**
EN(A,D)4X30*17**	1.03	0.94	*8MV*0901716**
ENH4X24*17**	1.03	0.96	*8MV*0901716**
ENH4X30*17**	1.03	0.94	*8MV*0901716**
EHD4X24A**	1.03	0.96	*8MV*1102120**
EHD4X30A**	1.03	0.96	*8MV*1102120**
EHD4X24A**	1.03	0.96	*8MV*1352422**
EHD4X30A**	1.03	0.96	*8MV*1352422**
EA*4X30*14A*	1.03	1.03	*9MX*0401410A**
EHD4X30A**	1.03	1.03	*9MX*0401410A**
EA*4X24*17A*	1.03	0.96	*9MX*0601714A**
EA*4X30*17A*	1.03	0.96	*9MX*0601714A**
EHD4X24A**	1.03	0.96	*9MX*0601714A**
EHD4X30A**	1.03	0.96	*9MX*0601714A**
EN(A,D)4X24*17**	1.03	0.98	*9MX*0601714A**
EN(A,D)4X30*17**	1.03	0.96	*9MX*0601714A**

COOLING INDOOR MODEL	CAPACITY	POWER	FURNACE MODEL
ENH4X24*17**	1.03	0.98	*9MX*0601714A**
ENH4X30*17**	1.03	0.96	*9MX*0601714A**
EHD4X30A**	1.03	1.01	*9MV*0401410A**
EA*4X24*17A*	1.03	0.96	*9MV*0601714A**
EA*4X30*17A*	1.03	0.96	*9MV*0601714A**
EHD4X24A**	1.03	0.98	*9MV*0601714A**
EHD4X30A**	1.03	0.96	*9MV*0601714A**
EN(A,D)4X24*17**	1.02	0.97	*9MV*0601714A**
EN(A,D)4X30*17**	1.03	0.96	*9MV*0601714A**
ENH4X24*17**	1.02	0.97	*9MV*0601714A**
ENH4X30*17**	1.03	0.96	*9MV*0601714A**
EA*4X24*17A*	1.03	0.96	*9MV*0801716A**
EA*4X30*17A*	1.03	0.96	*9MV*0801716A**
EHD4X24A**	1.03	0.96	*9MV*0801716A**
EHD4X30A**	1.03	0.96	*9MV*0801716A**
EN(A,D)4X24*17**	1.03	0.96	*9MV*0801716A**
EN(A,D)4X30*17**	1.03	0.96	*9MV*0801716A**
ENH4X24*17**	1.03	0.96	*9MV*0801716A**
ENH4X30*17**	1.03	0.96	*9MV*0801716A**
EHD4X30A**	1.03	0.96	*9MV*0802120A**
EHD4X24A**	1.03	0.96	*9MV*1002120A**
EHD4X30A**	1.03	0.96	*9MV*1002120A**
EHD4X24A**	1.03	0.96	*9MV*1202422A**
EHD4X30A**	1.03	0.96	*9MV*1202422A**
EA*4X24*17A*	1.03	0.98	*9MA*0601714A**
EA*4X30*17A*	1.03	0.96	*9MA*0601714A**
EHD4X24A**	1.03	0.98	*9MA*0601714A**
EHD4X30A**	1.03	0.96	*9MA*0601714A**
EN(A,D)4X24*17**	1.03	0.98	*9MA*0601714A**
EN(A,D)4X30*17**	1.03	0.96	*9MA*0601714A**
ENH4X24*17**	1.03	0.98	*9MA*0601714A**
ENH4X30*17**	1.03	0.96	*9MA*0601714A**
EA*4X24*17A*	1.03	0.96	*9MA*0801714A**
EA*4X30*17A*	1.03	0.96	*9MA*0801714A**
EHD4X24A**	1.03	0.96	*9MA*0801714A**
EHD4X30A**	1.03	0.96	*9MA*0801714A**
EN(A,D)4X24*17**	1.02	0.97	*9MA*0801714A**
EN(A,D)4X30*17**	1.03	0.96	*9MA*0801714A**
ENH4X24*17**	1.02	0.97	*9MA*0801714A**
ENH4X30*17**	1.03	0.96	*9MA*0801714A**
EHD4X24A**	1.03	0.96	*9MA*0802120A**
EHD4X30A**	1.03	0.96	*9MA*0802120A**
EHD4X24A**	1.03	0.96	*9MA*1002122A**
EHD4X30A**	1.03	0.96	*9MA*1002122A**
EHD4X24A**	1.03	0.96	*9MA*1202422A**

COOLING INDOOR MODEL	CAPACITY	POWER	FURNACE MODEL
EHD4X30A**	1.03	0.96	*9MA*1202422A**
EHD4X24A**	1.03	0.98	*9MA*0602120A**
EHD4X30A**	1.03	0.96	*9MA*0602120A**
EA*4X24*17A*	1.03	0.96	NOMV106D12*
EA*4X30*17A*	1.03	0.96	NOMV106D12*
EHD4X24A**	1.03	0.96	NOMV106D12*
EHD4X30A**	1.03	0.96	NOMV106D12*
EN(A,D)4X24*17**	1.03	0.98	NOMV106D12*
EN(A,D)4X30*17**	1.03	0.96	NOMV106D12*
ENH4X24*17**	1.03	0.98	NOMV106D12*
ENH4X30*17**	1.03	0.96	NOMV106D12*
EA*4X24*17A*	1.03	0.96	OLV098A12A
EA*4X30*17A*	1.03	0.96	OLV098A12A
EN(A,D)4X24*17**	1.03	0.98	OLV098A12A
EN(A,D)4X30*17**	1.03	0.96	OLV098A12A
EA*4X24*17A*	1.03	0.98	OMV098J12A
EA*4X30*17A*	1.03	0.96	OMV098J12A
EHD4X24A**	1.03	0.98	OMV098J12A
EHD4X30A**	1.03	0.96	OMV098J12A
EN(A,D)4X24*17**	1.03	0.98	OMV098J12A
EN(A,D)4X30*17**	1.03	0.96	OMV098J12A
ENH4X24*17**	1.03	0.98	OMV098J12A
ENH4X30*17**	1.03	0.96	OMV098J12A
EA*4X24*17A*	1.03	0.96	OMV112K14A
EA*4X30*17A*	1.03	0.94	OMV112K14A
EHD4X24A**	1.03	0.96	OMV112K14A
EHD4X30A**	1.03	0.96	OMV112K14A
EN(A,D)4X24*17**	1.03	0.96	OMV112K14A
EN(A,D)4X30*17**	1.03	0.94	OMV112K14A
ENH4X24*17**	1.03	0.96	OMV112K14A
ENH4X30*17**	1.03	0.94	OMV112K14A
EA*4X24*14A*	1.03	0.96	MV08**14C*
EA*4X24*17A*	1.03	0.96	MV12**17C*
EA*4X30*14A*	1.03	0.96	MV08**14C*
EA*4X30*17A*	1.03	0.94	MV12**17C*
EHD4X24A**	1.03	0.96	MV08**14C*
EHD4X24A**	1.03	0.96	MV12**17C*
EHD4X30A**	1.03	0.94	MV08**14C*
EHD4X30A**	1.03	0.94	MV12**17C*
EN(A,D)4X24*14**	1.03	0.96	MV08**14C*
EN(A,D)4X24*17**	1.03	0.96	MV12**17C*
EN(A,D)4X30*14**	1.03	0.96	MV08**14C*
EN(A,D)4X30*17**	1.03	0.94	MV12**17C*
ENH4X24*17**	1.03	0.96	MV12**17C*
ENH4X30*17**	1.03	0.94	MV12**17C*

HEATING			
HEATING INDOOR MODEL	CAPACITY	POWER	FURNACE MODEL
*FEM4P24**A*	1.00	1.00	
FCM4X24****	0.96	0.94	
FEA4X24**A*	1.00	0.98	
FEA4X30**A*	1.00	0.97	
FEM4P30**A*	1.00	0.96	
FEM4X24**A*	0.98	0.96	
FEM4X24**B*	1.00	1.00	
FEM4X30**A*	0.98	0.93	
FEM4X30**B*	1.00	0.95	
FS(M,U)4P24**A*	1.00	0.99	
FVM4X24****	0.94	0.92	
FXM4X24**A*	1.00	0.96	
FXM4X30**A*	1.00	0.96	
EA*4X24*14A*	0.99	0.97	*8MX*0451408**
EA*4X30*14A*	0.99	0.96	*8MX*0451408**
EHD4X24A**	0.99	0.97	*8MX*0451408**
EHD4X30A**	1.00	0.96	*8MX*0451408**
EN(A,D)4X24*14**	0.99	0.97	*8MX*0451408**
EN(A,D)4X30*14**	0.99	0.96	*8MX*0451408**
EA*4X24*14A*	0.98	0.98	*8MV*0701412**
EA*4X30*14A*	0.98	0.97	*8MV*0701412**
EHD4X24A**	0.99	0.97	*8MV*0701412**
EHD4X30A**	0.99	0.96	*8MV*0701412**
EN(A,D)4X24*14**	0.98	0.97	*8MV*0701412**
EN(A,D)4X30*14**	0.98	0.97	*8MV*0701412**
EA*4X24*17A*	0.98	0.97	*8MV*0901716**
EA*4X30*17A*	0.98	0.95	*8MV*0901716**
EHD4X24A**	0.99	0.96	*8MV*0901716**
EHD4X30A**	0.99	0.95	*8MV*0901716**
EN(A,D)4X24*17**	0.98	0.95	*8MV*0901716**
EN(A,D)4X30*17**	0.98	0.95	*8MV*0901716**
ENH4X24*17**	0.98	0.95	*8MV*0901716**
ENH4X30*17**	0.98	0.95	*8MV*0901716**
EHD4X24A**	0.99	0.97	*8MV*1102120**
EHD4X30A**	0.99	0.95	*8MV*1102120**
EHD4X24A**	0.99	0.97	*8MV*1352422**
EHD4X30A**	0.99	0.95	*8MV*1352422**
EA*4X30*14A*	1.00	0.99	*9MX*0401410A**
EHD4X30A**	1.02	1.00	*9MX*0401410A**
EA*4X24*17A*	0.98	0.97	*9MX*0601714A**
EA*4X30*17A*	0.99	0.96	*9MX*0601714A**
EHD4X24A**	0.98	0.98	*9MX*0601714A**
EHD4X30A**	0.99	0.96	*9MX*0601714A**
EN(A,D)4X24*17**	0.98	0.97	*9MX*0601714A**
EN(A,D)4X30*17**	0.99	0.96	*9MX*0601714A**
ENH4X24*17**	0.98	0.97	*9MX*0601714A**

HEATING INDOOR MODEL	CAPACITY	POWER	FURNACE MODEL
ENH4X30*17**	0.99	0.96	*9MX*0601714A**
EHD4X30A**	0.99	0.99	*9MV*0401410A**
EA*4X24*17A*	0.97	0.97	*9MV*0601714A**
EA*4X30*17A*	0.98	0.95	*9MV*0601714A**
EHD4X24A**	0.97	0.97	*9MV*0601714A**
EHD4X30A**	0.98	0.95	*9MV*0601714A**
EN(A,D)4X24*17**	0.97	0.97	*9MV*0601714A**
EN(A,D)4X30*17**	0.98	0.95	*9MV*0601714A**
ENH4X24*17**	0.97	0.97	*9MV*0601714A**
ENH4X30*17**	0.98	0.95	*9MV*0601714A**
EA*4X24*17A*	0.97	0.96	*9MV*0801716A**
EA*4X30*17A*	0.98	0.94	*9MV*0801716A**
EHD4X24A**	0.97	0.96	*9MV*0801716A**
EHD4X30A**	0.98	0.94	*9MV*0801716A**
EN(A,D)4X24*17**	0.97	0.96	*9MV*0801716A**
EN(A,D)4X30*17**	0.98	0.94	*9MV*0801716A**
ENH4X24*17**	0.97	0.96	*9MV*0801716A**
ENH4X30*17**	0.98	0.94	*9MV*0801716A**
EHD4X30A**	0.98	0.94	*9MV*0802120A**
EHD4X24A**	0.97	0.97	*9MV*1002120A**
EHD4X30A**	0.98	0.93	*9MV*1002120A**
EHD4X24A**	0.97	0.97	*9MV*1202422A**
EHD4X30A**	0.98	0.94	*9MV*1202422A**
EA*4X24*17A*	0.98	0.98	*9MA*0601714A**
EA*4X30*17A*	0.98	0.96	*9MA*0601714A**
EHD4X24A**	0.99	0.97	*9MA*0601714A**
EHD4X30A**	0.99	0.96	*9MA*0601714A**
EN(A,D)4X24*17**	0.99	0.98	*9MA*0601714A**
EN(A,D)4X30*17**	0.99	0.97	*9MA*0601714A**
ENH4X24*17**	0.99	0.98	*9MA*0601714A**
ENH4X30*17**	0.99	0.97	*9MA*0601714A**
EA*4X24*17A*	0.98	0.98	*9MA*0801714A**
EA*4X30*17A*	0.98	0.97	*9MA*0801714A**
EHD4X24A**	0.98	0.97	*9MA*0801714A**
EHD4X30A**	0.98	0.96	*9MA*0801714A**
EN(A,D)4X24*17**	0.98	0.97	*9MA*0801714A**
EN(A,D)4X30*17**	0.98	0.97	*9MA*0801714A**
ENH4X24*17**	0.98	0.97	*9MA*0801714A**
ENH4X30*17**	0.98	0.97	*9MA*0801714A**
EHD4X24A**	1.00	0.96	*9MA*0802120A**
EHD4X30A**	0.99	0.94	*9MA*0802120A**
EHD4X24A**	1.00	0.96	*9MA*1002122A**
EHD4X30A**	0.99	0.93	*9MA*1002122A**
EHD4X24A**	0.99	0.96	*9MA*1202422A**
EHD4X30A**	0.99	0.95	*9MA*1202422A**
EHD4X24A**	0.99	0.97	*9MA*0602120A**
EHD4X30A**	0.99	0.96	*9MA*0602120A**

HEATING INDOOR MODEL	CAPACITY	POWER	FURNACE MODEL
EA*4X24*17A*	0.98	0.98	NOMV106D12*
EA*4X30*17A*	0.98	0.96	NOMV106D12*
EHD4X24A**	0.99	0.98	NOMV106D12*
EHD4X30A**	0.99	0.96	NOMV106D12*
EN(A,D)4X24*17**	0.99	0.98	NOMV106D12*
EN(A,D)4X30*17**	0.98	0.96	NOMV106D12*
ENH4X24*17**	0.99	0.98	NOMV106D12*
ENH4X30*17**	0.98	0.96	NOMV106D12*
EA*4X24*17A*	0.99	0.97	OLV098A12A
EA*4X30*17A*	0.99	0.95	OLV098A12A
EN(A,D)4X24*17**	1.00	0.97	OLV098A12A
EN(A,D)4X30*17**	0.99	0.95	OLV098A12A
EA*4X24*17A*	0.99	0.97	OMV098J12A
EA*4X30*17A*	0.99	0.95	OMV098J12A
EHD4X24A**	1.00	0.97	OMV098J12A
EHD4X30A**	1.00	0.96	OMV098J12A
EN(A,D)4X24*17**	1.00	0.97	OMV098J12A
EN(A,D)4X30*17**	0.99	0.95	OMV098J12A
ENH4X24*17**	1.00	0.97	OMV098J12A
ENH4X30*17**	0.99	0.95	OMV098J12A
EA*4X24*17A*	0.98	0.96	OMV112K14A
EA*4X30*17A*	0.98	0.94	OMV112K14A
EHD4X24A**	0.99	0.96	OMV112K14A
EHD4X30A**	0.99	0.95	OMV112K14A
EN(A,D)4X24*17**	0.99	0.96	OMV112K14A
EN(A,D)4X30*17**	0.98	0.94	OMV112K14A
ENH4X24*17**	0.99	0.96	OMV112K14A
ENH4X30*17**	0.98	0.94	OMV112K14A
EA*4X24*14A*	0.97	0.96	MV08**14C*
EA*4X24*17A*	0.97	0.95	MV12**17C*
EA*4X30*14A*	0.97	0.95	MV08**14C*
EA*4X30*17A*	0.97	0.94	MV12**17C*
EHD4X24A**	0.98	0.95	MV08**14C*
EHD4X24A**	0.98	0.94	MV12**17C*
EHD4X30A**	0.97	0.94	MV08**14C*
EHD4X30A**	0.98	0.94	MV12**17C*
EN(A,D)4X24*14**	0.97	0.94	MV08**14C*
EN(A,D)4X24*17**	0.98	0.94	MV12**17C*
EN(A,D)4X30*14**	0.97	0.95	MV08**14C*
EN(A,D)4X30*17**	0.97	0.93	MV12**17C*
ENH4X24*17**	0.98	0.94	MV12**17C*
ENH4X30*17**	0.97	0.93	MV12**17C*

EXPANDED DATA (2–1/2 tons)

Cooling

EVAPORATOR AIR		CONDENSER ENTERING AIR TEMPERATURES deg F (C)																	
		75 (24)			85 (29)			95 (35)			105 (41)			115 (46)			125 (52)		
		Capacity MBtuh		Total System KW	Capacity MBtuh		Total System KW	Capacity MBtuh		Total System KW	Capacity MBtuh		Total System KW	Capacity MBtuh		Total System KW	Capacity MBtuh		Total System KW
CFM	EWB	Total	Sens		Total	Sens		Total	Sens		Total	Sens		Total	Sens		Total	Sens	
N4H330A(G)KF, N4H330GHF Outdoor Section With FEM4P30**A* Indoor Section																			
875	57	27.18	27.18	2.02	26.03	26.03	2.24	24.78	24.78	2.50	23.39	23.39	2.79	21.45	21.45	3.07	19.49	19.49	3.42
	62	28.44	24.01	2.03	26.96	23.33	2.25	25.36	22.59	2.51	23.65	21.76	2.79	21.48	21.48	3.07	19.54	19.54	3.42
	63	29.05	19.61	2.04	27.50	18.95	2.26	25.87	18.25	2.52	24.07	17.50	2.80	21.55	16.47	3.07	18.91	15.40	3.40
	67	31.49	20.43	2.07	29.83	19.77	2.30	28.06	19.07	2.55	26.17	18.34	2.85	24.14	17.56	3.17	21.41	16.53	3.49
	72	34.60	16.62	2.11	33.02	16.06	2.34	31.22	15.43	2.60	29.22	14.74	2.91	26.97	13.94	3.25	24.63	13.15	3.63
1000	57	28.38	28.38	2.07	27.13	27.13	2.29	25.81	25.81	2.55	24.36	24.36	2.85	22.72	22.72	3.17	20.47	20.47	3.49
	62	29.14	25.72	2.08	27.59	24.98	2.30	25.98	24.14	2.55	24.40	24.40	2.85	22.76	22.76	3.17	20.51	20.51	3.49
	63	29.71	20.82	2.08	28.09	20.14	2.30	26.36	19.42	2.56	24.52	18.67	2.85	22.11	17.68	3.13	19.33	16.54	3.45
	67	32.16	21.66	2.11	30.48	21.06	2.34	28.60	20.33	2.60	26.61	19.58	2.89	24.55	18.80	3.22	21.98	17.83	3.56
	72	35.21	17.30	2.15	33.61	16.78	2.38	31.78	16.17	2.65	29.75	15.50	2.95	27.51	14.76	3.29	25.00	13.90	3.68
1125	57	29.38	29.38	2.12	28.07	28.07	2.34	26.66	26.66	2.60	25.15	25.15	2.90	23.48	23.48	3.23	21.30	21.30	3.56
	62	29.75	27.27	2.12	28.15	28.15	2.34	26.70	26.70	2.60	25.18	25.18	2.90	23.51	23.51	3.23	21.34	21.34	3.56
	63	30.21	21.97	2.12	28.53	21.28	2.35	26.75	20.55	2.60	24.84	19.77	2.89	22.76	18.90	3.20	19.71	17.60	3.50
	67	32.67	22.83	2.15	30.96	22.26	2.38	29.01	21.55	2.64	26.97	20.78	2.94	24.86	19.98	3.27	22.48	19.05	3.63
	72	35.66	17.95	2.19	34.05	17.45	2.42	32.19	16.87	2.69	30.14	16.21	2.99	27.89	15.49	3.33	25.30	14.64	3.72

Heating

INDOOR AIR		OUTDOOR COIL ENTERING AIR TEMPERATURES deg F (C)																							
		-3 (–19)			7 (–14)			17 (–18)			27 (–3)			37 (3)			47 (8)			57 (14)			67 (19)		
		Capacity MBtuh		Total Sys-tem KW	Capacity MBtuh		Total Sys-tem KW	Capacity MBtuh		Total Sys-tem KW	Capacity MBtuh		Total Sys-tem KW	Capacity MBtuh		Total Sys-tem KW	Capacity MBtuh		Total Sys-tem KW	Capacity MBtuh		Total Sys-tem KW	Capacity MBtuh		Total Sys-tem KW
EDB	CFM	Total	Integ		Total	Integ		Total	Integ		Total	Integ		Total	Integ		Total	Integ		Total	Integ		Total	Integ	
N4H330A(G)KF, N4H330GHF Outdoor Section With FEM4P30**A* Indoor Section																									
65	875	11.54	10.62	2.01	14.61	13.43	2.07	17.89	16.31	2.13	21.51	19.10	2.20	24.95	22.71	2.26	28.66	28.66	2.33	32.91	32.91	2.40	36.28	36.28	2.45
	1000	11.73	10.79	2.02	14.83	13.63	2.07	18.18	16.58	2.12	21.76	19.32	2.18	25.26	22.99	2.23	29.04	29.04	2.29	33.14	33.14	2.34	36.10	36.10	2.37
	1125	11.90	10.95	2.04	15.02	13.81	2.08	18.71	17.06	2.13	21.96	19.50	2.17	25.52	23.22	2.21	29.36	29.36	2.27	33.18	33.18	2.30	35.81	35.81	2.32
70	875	11.08	10.20	2.10	14.17	13.02	2.16	17.44	15.90	2.22	21.21	18.84	2.30	24.58	22.37	2.36	28.23	28.23	2.44	32.45	32.45	2.51	35.92	35.92	2.57
	1000	11.30	10.40	2.11	14.41	13.24	2.17	17.70	16.14	2.22	21.45	19.05	2.28	24.88	22.64	2.33	28.60	28.60	2.39	32.74	32.74	2.45	35.79	35.79	2.49
	1125	11.48	10.56	2.13	14.61	13.42	2.18	17.93	16.35	2.22	21.65	19.23	2.27	25.13	22.87	2.32	28.91	28.91	2.37	32.84	32.84	2.41	35.55	35.55	2.43
75	875	10.66	9.81	2.20	13.74	12.63	2.26	16.99	15.49	2.32	20.87	18.54	2.41	24.20	22.03	2.48	27.80	27.80	2.55	31.99	31.99	2.63	35.52	35.52	2.69
	1000	10.85	9.98	2.21	13.97	12.83	2.26	17.25	15.73	2.32	21.12	18.76	2.39	24.49	22.29	2.44	28.16	28.16	2.50	32.32	32.32	2.56	35.45	35.45	2.60
	1125	11.02	10.14	2.22	14.16	13.01	2.27	17.47	15.93	2.32	21.33	18.95	2.38	24.75	22.52	2.43	28.47	28.47	2.48	32.48	32.48	2.52	35.27	35.27	2.55

MULTIPLIERS FOR COMBINATION RATINGS

COOLING			
COOLING INDOOR MODEL	CAPACITY	POWER	FURNACE MODEL
*FEM4P30**A*	1.00	1.00	
FCM4X24****	1.05	1.00	
FCM4X36****	1.05	0.99	
FEA4X30**A*	1.05	1.03	
FEA4X36**A*	1.05	1.05	
FEM4P36**A*	1.04	1.02	
FEM4X30**A*	1.05	1.02	
FEM4X30**B*	1.00	0.98	
FEM4X35**A*	1.05	1.03	
FEM4X36**A*	1.05	1.02	
FEM4X36**B*	1.04	1.02	
FS(M,U)4P30**A*	1.05	1.03	
FVM4X24****	1.05	1.00	
FVM4X36****	1.05	0.99	
FXM4X30**A*	1.05	1.00	
FXM4X36**A*	1.05	0.99	
EA*4X30*17A*	1.05	1.02	*8MX*0701716**
EA*4X36*17A*	1.05	1.02	*8MX*0701716**
EHD4X30A**	1.05	1.02	*8MX*0701716**
EHD4X36A**	1.05	1.00	*8MX*0701716**
EN(A,D)4X30*17**	1.05	1.02	*8MX*0701716**
EN(A,D,W)4X36*17**	1.05	1.02	*8MX*0701716**
ENH4X30*17**	1.05	1.02	*8MX*0701716**
ENH4X36*17**	1.05	1.02	*8MX*0701716**
EA*4X36*21A*	1.05	1.00	*8MX*0902116**
EHD4X30A**	1.05	1.02	*8MX*0902116**
EHD4X36A**	1.05	0.99	*8MX*0902116**
EN(A,D)4X36*21**	1.05	1.00	*8MX*0902116**
EA*4X30*14A*	1.04	1.02	*8MV*0701412**
EA*4X36*14A*	1.05	1.02	*8MV*0701412**
EHD4X30A**	1.05	1.02	*8MV*0701412**
EHD4X36A**	1.05	1.00	*8MV*0701412**
EA*4X30*17A*	1.04	1.00	*8MV*0901716**
EA*4X36*17A*	1.05	1.00	*8MV*0901716**
EHD4X30A**	1.05	1.00	*8MV*0901716**
EHD4X36A**	1.05	0.99	*8MV*0901716**
EN(A,D)4X30*17**	1.05	1.00	*8MV*0901716**
EN(A,D,W)4X36*17**	1.05	1.00	*8MV*0901716**
ENH4X30*17**	1.05	1.00	*8MV*0901716**
ENH4X36*17**	1.05	1.00	*8MV*0901716**
EA*4X36*21A*	1.05	1.00	*8MV*1102120**
EHD4X30A**	1.05	1.00	*8MV*1102120**
EHD4X36A**	1.05	0.99	*8MV*1102120**
EN(A,D)4X36*21**	1.05	1.00	*8MV*1102120**
EHD4X30A**	1.05	1.00	*8MV*1352422**

COOLING INDOOR MODEL	CAPACITY	POWER	FURNACE MODEL
EHD4X36A**	1.05	0.99	*8MV*1352422**
EA*4X30*17A*	1.05	1.02	*9MX*0601714A**
EA*4X36*17A*	1.05	1.02	*9MX*0601714A**
EHD4X30A**	1.05	1.02	*9MX*0601714A**
EHD4X36A**	1.05	1.00	*9MX*0601714A**
EN(A,D)4X30*17**	1.05	1.02	*9MX*0601714A**
EN(A,D,W)4X36*17**	1.05	1.02	*9MX*0601714A**
ENH4X30*17**	1.05	1.02	*9MX*0601714A**
ENH4X36*17**	1.05	1.02	*9MX*0601714A**
EA*4X30*17A*	1.05	1.02	*9MX*0801716A**
EA*4X36*17A*	1.05	1.02	*9MX*0801716A**
EHD4X30A**	1.05	1.02	*9MX*0801716A**
EHD4X36A**	1.05	1.00	*9MX*0801716A**
EN(A,D)4X30*17**	1.05	1.02	*9MX*0801716A**
EN(A,D,W)4X36*17**	1.05	1.02	*9MX*0801716A**
ENH4X30*17**	1.05	1.02	*9MX*0801716A**
ENH4X36*17**	1.05	1.02	*9MX*0801716A**
EA*4X30*17A*	1.04	1.01	*9MV*0601714A**
EA*4X36*17A*	1.05	1.02	*9MV*0601714A**
EHD4X30A**	1.04	1.01	*9MV*0601714A**
EHD4X36A**	1.05	1.00	*9MV*0601714A**
EN(A,D)4X30*17**	1.04	1.01	*9MV*0601714A**
EN(A,D,W)4X36*17**	1.04	1.01	*9MV*0601714A**
EA*4X30*17A*	1.05	1.02	*9MV*0801716A**
EA*4X36*17A*	1.05	1.00	*9MV*0801716A**
EHD4X30A**	1.05	1.02	*9MV*0801716A**
EHD4X36A**	1.05	1.00	*9MV*0801716A**
EN(A,D)4X30*17**	1.05	1.02	*9MV*0801716A**
EN(A,D,W)4X36*17**	1.05	1.02	*9MV*0801716A**
ENH4X30*17**	1.05	1.02	*9MV*0801716A**
ENH4X36*17**	1.05	1.02	*9MV*0801716A**
EA*4X36*21A*	1.05	0.99	*9MV*0802120A**
EHD4X30A**	1.05	1.00	*9MV*0802120A**
EHD4X36A**	1.05	0.99	*9MV*0802120A**
EN(A,D)4X36*21**	1.05	1.00	*9MV*0802120A**
EA*4X36*21A*	1.05	0.99	*9MV*1002120A**
EHD4X30A**	1.04	1.00	*9MV*1002120A**
EHD4X36A**	1.05	0.99	*9MV*1002120A**
EN(A,D)4X36*21**	1.04	1.00	*9MV*1002120A**
EHD4X30A**	1.05	1.00	*9MV*1202422A**
EHD4X36A**	1.05	0.99	*9MV*1202422A**
EA*4X36*17A*	1.05	1.02	*9MA*0601714A**
EHD4X30A**	1.05	1.03	*9MA*0601714A**
EHD4X36A**	1.05	1.00	*9MA*0601714A**
ENH4X30*17**	1.04	1.02	*9MA*0601714A**
ENH4X36*17**	1.04	1.02	*9MA*0601714A**

COOLING INDOOR MODEL	CAPACITY	POWER	FURNACE MODEL
EA*4X30*17A*	1.05	1.02	*9MA*0801714A**
EA*4X36*17A*	1.05	1.02	*9MA*0801714A**
EHD4X30A**	1.05	1.02	*9MA*0801714A**
EHD4X36A**	1.05	1.00	*9MA*0801714A**
EN(A,D)4X30*17**	1.05	1.02	*9MA*0801714A**
EN(A,D,W)4X36*17**	1.05	1.02	*9MA*0801714A**
ENH4X30*17**	1.05	1.02	*9MA*0801714A**
ENH4X36*17**	1.05	1.02	*9MA*0801714A**
EA*4X36*21A*	1.05	1.00	*9MA*0802120A**
EHD4X30A**	1.05	1.02	*9MA*0802120A**
EHD4X36A**	1.05	0.99	*9MA*0802120A**
EN(A,D)4X36*21**	1.05	1.02	*9MA*0802120A**
EA*4X36*21A*	1.05	0.99	*9MA*1002122A**
EHD4X30A**	1.05	1.00	*9MA*1002122A**
EHD4X36A**	1.05	0.99	*9MA*1002122A**
EN(A,D)4X36*21**	1.05	1.00	*9MA*1002122A**
EHD4X30A**	1.05	1.00	*9MA*1202422A**
EHD4X36A**	1.05	0.99	*9MA*1202422A**
EA*4X36*21A*	1.05	1.02	*9MA*0602120A**
EHD4X30A**	1.05	1.02	*9MA*0602120A**
EHD4X36A**	1.05	1.00	*9MA*0602120A**
EN(A,D)4X36*21**	1.05	1.02	*9MA*0602120A**
EHD4X30A**	1.04	1.01	NOMV106D12*
EHD4X36A**	1.05	1.00	NOMV106D12*
EN(A,D)4X30*17**	1.03	1.01	NOMV106D12*
EN(A,D,W)4X36*17**	1.03	1.01	NOMV106D12*
ENH4X30*17**	1.03	1.01	NOMV106D12*
ENH4X36*17**	1.03	1.01	NOMV106D12*
EA*4X30*17A*	1.04	1.01	OLV098A12A
EA*4X36*17A*	1.05	1.02	OLV098A12A
EN(A,D)4X30*17**	1.05	1.02	OLV098A12A
EN(A,D,W)4X36*17**	1.05	1.02	OLV098A12A
EA*4X36*21A*	1.05	1.00	OLV112A16A
EN(A,D)4X36*21**	1.05	1.02	OLV112A16A
EA*4X30*17A*	1.05	1.03	OMV098J12A
EA*4X36*17A*	1.05	1.02	OMV098J12A
EHD4X30A**	1.05	1.03	OMV098J12A
EHD4X36A**	1.05	1.02	OMV098J12A
EN(A,D)4X30*17**	1.05	1.03	OMV098J12A
EN(A,D,W)4X36*17**	1.05	1.03	OMV098J12A
ENH4X30*17**	1.05	1.03	OMV098J12A
ENH4X36*17**	1.05	1.03	OMV098J12A
EA*4X30*17A*	1.05	1.00	OMV112K14A
EA*4X36*17A*	1.05	1.00	OMV112K14A
EHD4X30A**	1.05	1.02	OMV112K14A

MULTIPLIERS FOR COMBINATION RATINGS

COOLING INDOOR MODEL	CAPACITY	POWER	FURNACE MODEL
EHD4X36A**	1.05	0.99	OMV112K14A
EN(A,D)4X30*17**	1.05	1.00	OMV112K14A
EN(A,D,W)4X36*17**	1.05	1.00	OMV112K14A
ENH4X30*17**	1.05	1.00	OMV112K14A
ENH4X36*17**	1.05	1.00	OMV112K14A
EA*4X30*14A*	1.04	1.00	MV08**14C*
EA*4X30*17A*	1.05	1.00	MV12**17C*
EA*4X36*14A*	1.04	1.00	MV08**14C*
EA*4X36*17A*	1.05	0.99	MV12**17C*
EA*4X36*21A*	1.05	0.99	MV12**17C*
EHD4X30A**	1.04	1.00	MV08**14C*
EHD4X30A**	1.05	1.00	MV12**17C*
EHD4X36A**	1.05	0.99	MV08**14C*
EHD4X36A**	1.05	0.99	MV12**17C*
EN(A,D)4X30*14**	1.04	1.00	MV08**14C*
EN(A,D)4X30*17**	1.05	1.00	MV12**17C*
EN(A,D)4X36*21**	1.05	1.00	MV12**17C*
EN(A,D,W)4X36*17**	1.05	1.00	MV12**17C*
ENH4X30*17**	1.05	1.00	MV12**17C*
ENH4X36*17**	1.05	1.00	MV12**17C*

HEATING

HEATING INDOOR MODEL	CAPACITY	POWER	FURNACE MODEL
*FEM4P30**A*	1.00	1.00	
FCM4X24****	1.00	0.99	
FCM4X36****	0.99	0.98	
FEA4X30**A*	0.99	0.99	
FEA4X36**A*	1.00	1.00	
FEM4P36**A*	1.00	1.00	
FEM4X30**A*	0.99	0.99	
FEM4X30**B*	1.00	1.00	
FEM4X35**A*	0.97	0.97	
FEM4X36**A*	0.91	0.94	
FEM4X36**B*	1.00	1.00	
FS(M,U)4P30**A*	1.00	1.00	
FVM4X24****	0.98	0.97	
FVM4X36****	0.97	0.96	
FXM4X30**A*	1.00	0.97	
FXM4X36**A*	0.98	0.93	
EA*4X30*17A*	0.99	1.00	*8MX*0701716**
EA*4X36*17A*	0.99	0.99	*8MX*0701716**
EHD4X30A**	0.99	0.99	*8MX*0701716**
EHD4X36A**	0.99	0.97	*8MX*0701716**
EN(A,D)4X30*17**	0.99	1.00	*8MX*0701716**
EN(A,D,W)4X36*17**	0.99	1.00	*8MX*0701716**
ENH4X30*17**	0.99	1.00	*8MX*0701716**

HEATING INDOOR MODEL	CAPACITY	POWER	FURNACE MODEL
ENH4X36*17**	0.99	1.00	*8MX*0701716**
EA*4X36*21A*	0.99	0.97	*8MX*0902116**
EHD4X30A**	0.99	0.99	*8MX*0902116**
EHD4X36A**	0.99	0.95	*8MX*0902116**
EN(A,D)4X36*21**	0.99	0.99	*8MX*0902116**
EA*4X30*14A*	0.98	1.00	*8MV*0701412**
EA*4X36*14A*	0.98	1.00	*8MV*0701412**
EHD4X30A**	0.99	0.99	*8MV*0701412**
EHD4X36A**	0.99	0.96	*8MV*0701412**
EA*4X30*17A*	0.98	1.00	*8MV*0901716**
EA*4X36*17A*	0.98	0.99	*8MV*0901716**
EHD4X30A**	0.99	0.98	*8MV*0901716**
EHD4X36A**	0.99	0.96	*8MV*0901716**
EN(A,D)4X30*17**	0.98	0.99	*8MV*0901716**
EN(A,D,W)4X36*17**	0.98	0.99	*8MV*0901716**
ENH4X30*17**	0.98	0.99	*8MV*0901716**
ENH4X36*17**	0.98	0.99	*8MV*0901716**
EA*4X36*21A*	0.98	0.98	*8MV*1102120**
EHD4X30A**	0.99	0.98	*8MV*1102120**
EHD4X36A**	0.99	0.95	*8MV*1102120**
EN(A,D)4X36*21**	0.98	0.99	*8MV*1102120**
EHD4X30A**	0.99	0.98	*8MV*1352422**
EHD4X36A**	0.99	0.95	*8MV*1352422**
EA*4X30*17A*	0.99	1.00	*9MX*0601714A**
EA*4X36*17A*	0.99	0.99	*9MX*0601714A**
EHD4X30A**	0.99	0.99	*9MX*0601714A**
EHD4X36A**	0.99	0.97	*9MX*0601714A**
EN(A,D)4X30*17**	0.99	1.00	*9MX*0601714A**
EN(A,D,W)4X36*17**	0.99	1.00	*9MX*0601714A**
ENH4X30*17**	0.99	1.00	*9MX*0601714A**
ENH4X36*17**	0.99	1.00	*9MX*0601714A**
EA*4X30*17A*	0.99	0.99	*9MX*0801716A**
EA*4X36*17A*	1.00	0.99	*9MX*0801716A**
EHD4X30A**	1.00	0.98	*9MX*0801716A**
EHD4X36A**	0.99	0.95	*9MX*0801716A**
EN(A,D)4X30*17**	0.99	0.99	*9MX*0801716A**
EN(A,D,W)4X36*17**	0.99	0.99	*9MX*0801716A**
ENH4X30*17**	0.99	0.99	*9MX*0801716A**
ENH4X36*17**	0.99	0.99	*9MX*0801716A**
EA*4X30*17A*	0.98	1.00	*9MV*0601714A**
EA*4X36*17A*	0.98	0.99	*9MV*0601714A**
EHD4X30A**	0.98	0.99	*9MV*0601714A**
EHD4X36A**	0.99	0.97	*9MV*0601714A**
EN(A,D)4X30*17**	0.98	1.00	*9MV*0601714A**
EN(A,D,W)4X36*17**	0.98	1.00	*9MV*0601714A**

HEATING INDOOR MODEL	CAPACITY	POWER	FURNACE MODEL
EA*4X30*17A*	0.98	0.99	*9MV*0801716A**
EA*4X36*17A*	0.98	0.99	*9MV*0801716A**
EHD4X30A**	0.98	0.98	*9MV*0801716A**
EHD4X36A**	0.98	0.95	*9MV*0801716A**
EN(A,D)4X30*17**	0.98	0.99	*9MV*0801716A**
EN(A,D,W)4X36*17**	0.98	0.99	*9MV*0801716A**
ENH4X30*17**	0.98	0.99	*9MV*0801716A**
ENH4X36*17**	0.98	0.99	*9MV*0801716A**
EA*4X36*21A*	0.98	0.97	*9MV*0802120A**
EHD4X30A**	0.98	0.97	*9MV*0802120A**
EHD4X36A**	0.98	0.94	*9MV*0802120A**
EN(A,D)4X36*21**	0.97	0.98	*9MV*0802120A**
EA*4X36*21A*	0.97	0.97	*9MV*1002120A**
EHD4X30A**	0.97	0.98	*9MV*1002120A**
EHD4X36A**	0.97	0.95	*9MV*1002120A**
EN(A,D)4X36*21**	0.97	0.99	*9MV*1002120A**
EHD4X30A**	0.98	0.97	*9MV*1202422A**
EHD4X36A**	0.98	0.94	*9MV*1202422A**
EA*4X36*17A*	0.99	1.00	*9MA*0601714A**
EHD4X30A**	0.99	1.00	*9MA*0601714A**
EHD4X36A**	0.99	0.98	*9MA*0601714A**
ENH4X30*17**	0.98	1.01	*9MA*0601714A**
ENH4X36*17**	0.98	1.01	*9MA*0601714A**
EA*4X30*17A*	0.99	1.00	*9MA*0801714A**
EA*4X36*17A*	0.99	0.99	*9MA*0801714A**
EHD4X30A**	0.99	0.99	*9MA*0801714A**
EHD4X36A**	0.99	0.96	*9MA*0801714A**
EN(A,D)4X30*17**	0.99	1.00	*9MA*0801714A**
EN(A,D,W)4X36*17**	0.99	1.00	*9MA*0801714A**
ENH4X30*17**	0.99	1.00	*9MA*0801714A**
ENH4X36*17**	0.99	1.00	*9MA*0801714A**
EA*4X36*21A*	0.99	0.98	*9MA*0802120A**
EHD4X30A**	0.99	0.98	*9MA*0802120A**
EHD4X36A**	0.99	0.95	*9MA*0802120A**
EN(A,D)4X36*21**	0.99	1.00	*9MA*0802120A**
EA*4X36*21A*	0.99	0.97	*9MA*1002122A**
EHD4X30A**	0.99	0.97	*9MA*1002122A**
EHD4X36A**	0.99	0.94	*9MA*1002122A**
EN(A,D)4X36*21**	0.99	0.98	*9MA*1002122A**
EHD4X30A**	0.99	0.98	*9MA*1202422A**
EHD4X36A**	0.99	0.95	*9MA*1202422A**
EA*4X36*21A*	0.99	0.99	*9MA*0602120A**
EHD4X30A**	0.99	0.98	*9MA*0602120A**
EHD4X36A**	0.99	0.97	*9MA*0602120A**
EN(A,D)4X36*21**	0.99	1.00	*9MA*0602120A**

Specifications subject to change without notice.

HEATING INDOOR MODEL	CAPACITY	POWER	FURNACE MODEL
EA*4X30*14A*	0.97	0.98	MV08**14C*
EA*4X30*17A*	0.97	0.97	MV12**17C*
EA*4X36*14A*	0.97	0.98	MV08**14C*
EA*4X36*17A*	0.97	0.97	MV12**17C*
EA*4X36*21A*	0.97	0.96	MV12**17C*
EHD4X30A**	0.97	0.96	MV08**14C*
EHD4X30A**	0.98	0.96	MV12**17C*
EHD4X36A**	0.97	0.95	MV08**14C*
EHD4X36A**	0.98	0.94	MV12**17C*
EN(A,D)4X30*14**	0.97	0.99	MV08**14C*
EN(A,D)4X30*17**	0.97	0.97	MV12**17C*
EN(A,D)4X36*21**	0.97	0.97	MV12**17C*
EN(A,D,W)4X36*17**	0.97	0.97	MV12**17C*
ENH4X30*17**	0.97	0.97	MV12**17C*
ENH4X36*17**	0.97	0.97	MV12**17C*

HEATING INDOOR MODEL	CAPACITY	POWER	FURNACE MODEL
EA*4X36*17A*	0.99	1.00	OMV098J12A
EHD4X30A**	1.00	1.00	OMV098J12A
EHD4X36A**	0.99	0.97	OMV098J12A
EN(A,D)4X30*17**	0.99	1.02	OMV098J12A
EN(A,D,W)4X36*17**	0.99	1.02	OMV098J12A
ENH4X30*17**	0.99	1.02	OMV098J12A
ENH4X36*17**	0.99	1.02	OMV098J12A
EA*4X30*17A*	0.98	0.99	OMV112K14A
EA*4X36*17A*	0.99	0.98	OMV112K14A
EHD4X30A**	0.99	0.98	OMV112K14A
EHD4X36A**	0.99	0.95	OMV112K14A
EN(A,D)4X30*17**	0.99	0.99	OMV112K14A
EN(A,D,W)4X36*17**	0.99	0.99	OMV112K14A
ENH4X30*17**	0.99	0.99	OMV112K14A
ENH4X36*17**	0.99	0.99	OMV112K14A

HEATING INDOOR MODEL	CAPACITY	POWER	FURNACE MODEL
EHD4X30A**	0.98	0.99	NOMV106D12*
EHD4X36A**	0.98	0.97	NOMV106D12*
EN(A,D)4X30*17**	0.97	0.99	NOMV106D12*
EN(A,D,W)4X36*17**	0.97	0.99	NOMV106D12*
ENH4X30*17**	0.97	0.99	NOMV106D12*
ENH4X36*17**	0.97	0.99	NOMV106D12*
EA*4X30*17A*	0.99	1.01	OLV098A12A
EA*4X36*17A*	0.99	1.00	OLV098A12A
EN(A,D)4X30*17**	0.99	1.01	OLV098A12A
EN(A,D,W)4X36*17**	0.99	1.01	OLV098A12A
EA*4X36*21A*	0.99	0.98	OLV112A16A
EN(A,D)4X36*21**	0.99	0.99	OLV112A16A
EA*4X30*17A*	0.99	1.01	OMV098J12A

Specifications subject to change without notice.

EXPANDED DATA (3 tons)

Cooling

EVAPORATOR AIR		CONDENSER ENTERING AIR TEMPERATURES deg F (C)																	
		75 (24)			85 (29)			95 (35)			105 (41)			115 (46)			125 (52)		
		Capacity MBtuh		Total System KW	Capacity MBtuh		Total System KW	Capacity MBtuh		Total System KW	Capacity MBtuh		Total System KW	Capacity MBtuh		Total System KW	Capacity MBtuh		Total System KW
CFM	EWB	Total	Sens		Total	Sens		Total	Sens		Total	Sens		Total	Sens		Total	Sens	
N4H336A(G)KF, N4H3336GH(L)F Outdoor Section With FEM4P36**A* Indoor Section																			
1050	57	31.95	31.95	2.39	30.67	30.67	2.65	29.29	29.29	2.94	27.80	27.80	3.26	25.76	25.76	3.59	23.48	23.48	3.99
	62	33.18	28.52	2.41	31.56	27.77	2.66	29.84	26.94	2.95	28.01	26.01	3.27	25.81	25.81	3.60	23.53	23.53	3.99
	63	33.87	23.22	2.42	32.19	22.50	2.67	30.39	21.74	2.95	28.45	20.94	3.28	25.81	19.85	3.59	22.68	18.58	3.97
	67	36.68	24.14	2.44	34.92	23.49	2.71	32.98	22.73	3.00	30.94	21.95	3.32	28.72	21.10	3.70	25.84	20.01	4.06
	72	40.08	19.42	2.48	38.56	18.94	2.75	36.71	18.31	3.04	34.58	17.59	3.38	32.09	16.72	3.77	29.53	15.84	4.21
1200	57	33.27	33.27	2.45	31.91	31.91	2.71	30.46	30.46	3.00	28.89	28.89	3.33	27.12	27.12	3.70	24.64	24.64	4.06
	62	33.98	30.51	2.46	32.31	29.67	2.72	30.54	30.54	3.00	28.93	28.93	3.33	27.16	27.16	3.70	24.68	24.68	4.07
	63	34.60	24.67	2.47	32.85	23.94	2.72	30.97	23.16	3.01	28.97	22.34	3.33	26.70	21.41	3.69	23.25	19.97	4.02
	67	37.41	25.60	2.49	35.66	25.04	2.76	33.60	24.27	3.05	31.47	23.46	3.38	29.19	22.59	3.75	26.62	21.61	4.16
	72	40.70	20.22	2.53	39.19	19.78	2.79	37.34	19.19	3.09	35.20	18.50	3.43	32.76	17.71	3.82	29.95	16.76	4.27
1350	57	34.39	34.39	2.51	32.97	32.97	2.77	31.42	31.42	3.06	29.79	29.79	3.39	27.97	27.97	3.77	25.68	25.68	4.15
	62	34.71	32.24	2.51	33.03	33.03	2.77	31.46	31.46	3.06	29.82	29.82	3.39	28.01	28.01	3.77	25.72	25.72	4.16
	63	35.21	26.05	2.52	33.35	25.30	2.77	31.40	24.50	3.06	29.36	23.65	3.38	27.07	22.70	3.74	23.69	21.22	4.08
	67	37.95	26.97	2.54	36.17	26.43	2.81	34.08	25.72	3.10	31.88	24.88	3.43	29.55	23.99	3.81	26.96	22.97	4.22
	72	41.12	20.88	2.57	39.64	20.53	2.84	37.79	20.00	3.14	35.64	19.34	3.48	33.18	18.58	3.87	30.35	17.66	4.31

Heating

INDOOR AIR		OUTDOOR COIL ENTERING AIR TEMPERATURES deg F (C)																							
		-3 (–19)			7 (–14)			17 (–18)			27 (–3)			37 (3)			47 (8)			57 (14)			67 (19)		
		Capacity MBtuh		Total Sys-tem KW	Capacity MBtuh		Total Sys-tem KW	Capacity MBtuh		Total Sys-tem KW	Capacity MBtuh		Total Sys-tem KW	Capacity MBtuh		Total Sys-tem KW	Capacity MBtuh		Total Sys-tem KW	Capacity MBtuh		Total Sys-tem KW	Capacity MBtuh		Total Sys-tem KW
EDB	CFM	Total	Integ		Total	Integ		Total	Integ		Total	Integ		Total	Integ		Total	Integ		Total	Integ		Total	Integ	
N4H336A(G)KF, N4H3336GH(L)F Outdoor Section With FEM4P36**A* Indoor Section																									
65	1050	12.79	11.77	2.17	16.58	15.24	2.26	20.53	18.72	2.35	24.72	21.96	2.46	29.59	26.93	2.60	33.44	33.44	2.71	37.48	37.48	2.84	41.96	41.96	3.04
	1200	13.08	12.04	2.19	16.92	15.55	2.28	20.91	19.07	2.36	25.18	22.36	2.46	29.99	27.29	2.58	33.84	33.84	2.68	38.05	38.05	2.80	42.68	42.68	2.97
	1350	13.35	12.28	2.22	17.22	15.83	2.30	21.25	19.37	2.37	25.56	22.70	2.46	30.31	27.58	2.58	34.23	34.23	2.66	38.53	38.53	2.77	43.26	43.26	2.93
70	1050	11.97	11.01	2.27	15.80	14.52	2.36	19.79	18.04	2.46	24.01	21.32	2.57	29.06	26.45	2.72	32.95	32.95	2.83	36.89	36.89	2.97	41.27	41.27	3.17
	1200	12.30	11.31	2.29	16.16	14.85	2.38	20.20	18.42	2.47	24.46	21.72	2.56	29.49	26.84	2.70	33.40	33.40	2.80	37.45	37.45	2.92	41.97	41.97	3.10
	1350	12.56	11.55	2.32	16.46	15.13	2.40	20.53	18.72	2.48	24.83	22.06	2.57	29.84	27.16	2.69	33.76	33.76	2.78	37.92	37.92	2.89	42.56	42.56	3.06
75	1050	11.18	10.29	2.37	15.04	13.83	2.47	19.07	17.39	2.57	23.26	20.66	2.68	27.74	25.24	2.81	32.46	32.46	2.96	36.32	36.32	3.10	40.58	40.58	3.31
	1200	11.45	10.53	2.40	15.37	14.13	2.48	19.45	17.73	2.57	23.71	21.06	2.67	28.43	25.87	2.79	32.89	32.89	2.92	36.86	36.86	3.05	41.27	41.27	3.24
	1350	11.71	10.78	2.43	15.67	14.40	2.51	19.78	18.04	2.59	24.08	21.39	2.68	29.29	26.66	2.81	33.26	33.26	2.90	37.31	37.31	3.02	41.84	41.84	3.19

MULTIPLIERS FOR COMBINATION RATINGS

COOLING			
COOLING INDOOR MODEL	CAPACITY	POWER	FURNACE MODEL
*FEM4P36**A*	1.00	1.00	
FCM4X24****	1.02	0.96	
FCM4X36****	1.02	0.92	
FCM4X48****	1.06	0.93	
FCM4X60****	1.07	0.93	
FEA4X36**A*	1.02	1.00	
FEM4P42**A*	1.03	0.98	
FEM4X35**A*	1.02	0.98	
FEM4X36**A*	1.04	0.99	
FEM4X36**B*	1.00	0.97	
FEM4X42**A*	1.03	1.01	
FEM4X42**B*	1.03	0.98	
FS(M,U)4P42**A*	1.04	1.01	
FVM4X24****	1.02	0.97	
FVM4X36****	1.03	0.97	
FVM4X60****	1.07	0.93	
FXM4X36**A*	1.06	0.97	
FXM4X42**A*	1.06	0.97	
EA*4X36*14A*	1.01	1.01	*8MX*0451408**
EHD4X36A**	1.04	1.01	*8MX*0451408**
EHD4X42A**	1.04	1.01	*8MX*0451408**
EA*4X36*17A*	1.02	0.99	*8MX*0701716**
EHD4X36A**	1.04	0.99	*8MX*0701716**
EHD4X42A**	1.05	0.98	*8MX*0701716**
EN(A,D,W)4X36*17**	1.01	0.99	*8MX*0701716**
END4X42*17**	1.03	0.98	*8MX*0701716**
ENH4X36*17**	1.01	0.99	*8MX*0701716**
EA*4X36*21A*	1.03	0.97	*8MX*0902116**
EA*4X42*21A*	1.04	0.97	*8MX*0902116**
EHD4X36A**	1.05	0.96	*8MX*0902116**
EHD4X42A**	1.05	0.97	*8MX*0902116**
EN(A,D)4X36*21**	1.02	0.96	*8MX*0902116**
EN(A,D,W)4X42*21**	1.04	0.97	*8MX*0902116**
ENH4X42*21**	1.04	0.97	*8MX*0902116**
EA*4X36*21A*	1.04	0.97	*8MX*1102120**
EA*4X42*21A*	1.04	0.98	*8MX*1102120**
EHD4X36A**	1.05	0.96	*8MX*1102120**
EHD4X42A**	1.06	0.97	*8MX*1102120**
EN(A,D)4X36*21**	1.02	0.96	*8MX*1102120**
EN(A,D,W)4X42*21**	1.04	0.97	*8MX*1102120**
ENH4X42*21**	1.04	0.97	*8MX*1102120**
EA*4X36*14A*	1.01	0.99	*8MV*0701412**
EHD4X36A**	1.04	0.97	*8MV*0701412**
EHD4X42A**	1.04	0.98	*8MV*0701412**
EA*4X36*17A*	1.02	0.96	*8MV*0901716**

COOLING INDOOR MODEL	CAPACITY	POWER	FURNACE MODEL
EHD4X36A**	1.04	0.97	*8MV*0901716**
EHD4X42A**	1.04	0.95	*8MV*0901716**
EN(A,D,W)4X36*17**	1.01	0.97	*8MV*0901716**
END4X42*17**	1.04	0.97	*8MV*0901716**
ENH4X36*17**	1.01	0.97	*8MV*0901716**
EA*4X36*21A*	1.02	0.96	*8MV*1102120**
EA*4X42*21A*	1.02	0.96	*8MV*1102120**
EHD4X36A**	1.04	0.98	*8MV*1102120**
EHD4X42A**	1.05	0.96	*8MV*1102120**
EN(A,D)4X36*21**	1.02	0.97	*8MV*1102120**
EN(A,D,W)4X42*21**	1.03	0.97	*8MV*1102120**
ENH4X42*21**	1.03	0.97	*8MV*1102120**
EA*4X42*24A*	1.03	0.94	*8MV*1352422**
EHD4X36A**	1.04	0.95	*8MV*1352422**
EHD4X42A**	1.05	0.96	*8MV*1352422**
EA*4X36*17A*	1.01	0.99	*9MX*0601714A**
EHD4X36A**	1.04	0.99	*9MX*0601714A**
EHD4X42A**	1.04	1.00	*9MX*0601714A**
EN(A,D,W)4X36*17**	1.01	0.99	*9MX*0601714A**
END4X42*17**	1.03	0.98	*9MX*0601714A**
ENH4X36*17**	1.01	0.99	*9MX*0601714A**
EA*4X36*17A*	1.01	0.97	*9MX*0801716A**
EHD4X36A**	1.04	0.97	*9MX*0801716A**
EHD4X42A**	1.04	0.98	*9MX*0801716A**
EN(A,D,W)4X36*17**	1.01	0.96	*9MX*0801716A**
END4X42*17**	1.03	0.97	*9MX*0801716A**
ENH4X36*17**	1.01	0.96	*9MX*0801716A**
EA*4X36*21A*	1.04	0.97	*9MX*1002120A**
EA*4X42*21A*	1.04	0.95	*9MX*1002120A**
EHD4X36A**	1.05	0.97	*9MX*1002120A**
EHD4X42A**	1.06	0.96	*9MX*1002120A**
EN(A,D)4X36*21**	1.03	0.97	*9MX*1002120A**
EN(A,D,W)4X42*21**	1.04	0.95	*9MX*1002120A**
ENH4X42*21**	1.04	0.95	*9MX*1002120A**
EA*4X36*17A*	1.01	0.99	*9MV*0601714A**
EHD4X36A**	1.04	0.99	*9MV*0601714A**
EHD4X42A**	1.04	1.00	*9MV*0601714A**
EN(A,D,W)4X36*17**	1.01	0.99	*9MV*0601714A**
END4X42*17**	1.03	1.00	*9MV*0601714A**
ENH4X36*17**	1.01	0.99	*9MV*0601714A**
EA*4X36*17A*	1.02	0.97	*9MV*0801716A**
EHD4X36A**	1.04	0.97	*9MV*0801716A**
EHD4X42A**	1.05	0.98	*9MV*0801716A**
EN(A,D,W)4X36*17**	1.01	0.99	*9MV*0801716A**
END4X42*17**	1.04	0.99	*9MV*0801716A**
ENH4X36*17**	1.01	0.99	*9MV*0801716A**

COOLING INDOOR MODEL	CAPACITY	POWER	FURNACE MODEL
EA*4X36*21A*	1.02	0.96	*9MV*0802120A**
EA*4X42*21A*	1.03	0.97	*9MV*0802120A**
EHD4X36A**	1.04	0.97	*9MV*0802120A**
EHD4X42A**	1.04	0.95	*9MV*0802120A**
EN(A,D)4X36*21**	1.01	0.97	*9MV*0802120A**
EN(A,D,W)4X42*21**	1.02	0.96	*9MV*0802120A**
ENH4X42*21**	1.02	0.96	*9MV*0802120A**
EA*4X36*21A*	1.02	0.96	*9MV*1002120A**
EA*4X42*21A*	1.03	0.97	*9MV*1002120A**
EHD4X36A**	1.04	0.97	*9MV*1002120A**
EHD4X42A**	1.04	0.94	*9MV*1002120A**
EN(A,D)4X36*21**	1.01	0.95	*9MV*1002120A**
EN(A,D,W)4X42*21**	1.02	0.96	*9MV*1002120A**
ENH4X42*21**	1.02	0.96	*9MV*1002120A**
EA*4X42*24A*	1.03	0.97	*9MV*1202422A**
EHD4X36A**	1.04	0.97	*9MV*1202422A**
EHD4X42A**	1.05	0.96	*9MV*1202422A**
EA*4X36*17A*	1.00	0.97	*9MA*0601714A**
EHD4X36A**	1.02	0.98	*9MA*0601714A**
EHD4X42A**	1.03	0.98	*9MA*0601714A**
EN(A,D,W)4X36*17**	1.00	0.97	*9MA*0601714A**
END4X42*17**	1.02	0.97	*9MA*0601714A**
ENH4X36*17**	1.00	0.97	*9MA*0601714A**
EA*4X36*17A*	1.01	0.96	*9MA*0801714A**
EHD4X36A**	1.03	0.97	*9MA*0801714A**
EHD4X42A**	1.04	0.97	*9MA*0801714A**
EN(A,D,W)4X36*17**	1.01	0.98	*9MA*0801714A**
END4X42*17**	1.02	0.96	*9MA*0801714A**
ENH4X36*17**	1.01	0.98	*9MA*0801714A**
EA*4X36*21A*	1.02	0.96	*9MA*0802120A**
EA*4X42*21A*	1.02	0.96	*9MA*0802120A**
EHD4X36A**	1.04	0.95	*9MA*0802120A**
EHD4X42A**	1.04	0.95	*9MA*0802120A**
EN(A,D)4X36*21**	1.01	0.95	*9MA*0802120A**
EN(A,D,W)4X42*21**	1.02	0.96	*9MA*0802120A**
ENH4X42*21**	1.02	0.96	*9MA*0802120A**
EA*4X36*21A*	1.02	0.96	*9MA*1002122A**
EA*4X42*21A*	1.02	0.96	*9MA*1002122A**
EHD4X36A**	1.04	0.97	*9MA*1002122A**
EHD4X42A**	1.05	0.96	*9MA*1002122A**
EN(A,D)4X36*21**	1.02	0.96	*9MA*1002122A**
EN(A,D,W)4X42*21**	1.02	0.96	*9MA*1002122A**
ENH4X42*21**	1.02	0.96	*9MA*1002122A**
EA*4X42*24A*	1.02	0.96	*9MA*1202422A**
EHD4X36A**	1.04	0.97	*9MA*1202422A**
EHD4X42A**	1.04	0.95	*9MA*1202422A**

COOLING INDOOR MODEL	CAPACITY	POWER	FURNACE MODEL
EA*4X36*21A*	1.01	0.97	*9MA*0602120A**
EA*4X42*21A*	1.02	0.96	*9MA*0602120A**
EHD4X36A**	1.03	0.97	*9MA*0602120A**
EHD4X42A**	1.04	0.97	*9MA*0602120A**
EN(A,D)4X36*21**	1.01	0.96	*9MA*0602120A**
EN(A,D,W)4X42*21**	1.02	0.97	*9MA*0602120A**
ENH4X42*21**	1.02	0.97	*9MA*0602120A**
EA*4X36*17A*	1.01	0.97	NOMV106D12*
EHD4X36A**	1.03	0.97	NOMV106D12*
EHD4X42A**	1.04	0.97	NOMV106D12*
EN(A,D,W)4X36*17**	1.01	0.98	NOMV106D12*
END4X42*17**	1.02	0.98	NOMV106D12*
ENH4X36*17**	1.01	0.98	NOMV106D12*
EA*4X36*21A*	1.02	0.96	NOMV156E19*
EA*4X42*21A*	1.02	0.96	NOMV156E19*
EHD4X36A**	1.04	0.97	NOMV156E19*
EHD4X42A**	1.04	0.98	NOMV156E19*
EN(A,D)4X36*21**	1.01	0.97	NOMV156E19*
EN(A,D,W)4X42*21**	1.02	0.96	NOMV156E19*
ENH4X42*21**	1.02	0.96	NOMV156E19*
EA*4X36*17A*	1.01	0.99	OLV098A12A
EN(A,D,W)4X36*17**	1.01	0.99	OLV098A12A
END4X42*17**	1.02	1.00	OLV098A12A
EA*4X36*21A*	1.02	0.98	OLV112A16A
EA*4X42*21A*	1.03	0.98	OLV112A16A
EN(A,D)4X36*21**	1.02	0.99	OLV112A16A
EN(A,D,W)4X42*21**	1.03	0.98	OLV112A16A
EA*4X42*24A*	1.05	0.96	OLV154F20A
EA*4X36*17A*	1.01	0.99	OMV098J12A
EHD4X36A**	1.04	1.01	OMV098J12A
EHD4X42A**	1.04	1.00	OMV098J12A
EN(A,D,W)4X36*17**	1.01	0.99	OMV098J12A
END4X42*17**	1.03	1.00	OMV098J12A
ENH4X36*17**	1.01	0.99	OMV098J12A
EA*4X36*17A*	1.02	0.97	OMV112K14A
EHD4X36A**	1.04	0.97	OMV112K14A
EHD4X42A**	1.04	0.98	OMV112K14A
EN(A,D,W)4X36*17**	1.01	0.99	OMV112K14A
END4X42*17**	1.04	0.99	OMV112K14A
ENH4X36*17**	1.01	0.99	OMV112K14A
EA*4X42*24A*	1.03	0.93	OMV154L20A
EHD4X36A**	1.04	0.94	OMV154L20A
EHD4X42A**	1.05	0.94	OMV154L20A
EA*4X36*14A*	1.02	0.97	MV08**14C*
EA*4X36*17A*	1.02	0.96	MV12**17C*
EA*4X36*21A*	1.02	0.96	MV16**21C*
EA*4X42*21A*	1.04	0.95	MV16**21C*
EA*4X42*24A*	1.03	0.94	MV20**24C*

COOLING INDOOR MODEL	CAPACITY	POWER	FURNACE MODEL
EHD4X36A**	1.04	1.04	
EHD4X36A**	1.04	0.98	MV08**14C*
EHD4X36A**	1.05	0.96	MV12**17C*
EHD4X36A**	1.05	0.96	MV16**21C*
EHD4X36A**	1.04	0.95	MV20**24C*
EHD4X42A**	1.05	1.05	
EHD4X42A**	1.05	0.96	MV08**14C*
EHD4X42A**	1.05	0.97	MV12**17C*
EHD4X42A**	1.05	0.95	MV16**21C*
EHD4X42A**	1.05	0.94	MV20**24C*
EN(A,D)4X36*21**	1.02	0.96	MV16**21C*
EN(A,D,W)4X36*17**	1.02	0.96	MV12**17C*
EN(A,D,W)4X42*21**	1.04	0.97	MV16**21C*
END4X42*17**	1.04	0.98	MV12**17C*
ENH4X36*17**	1.02	0.96	MV12**17C*
ENH4X42*21**	1.04	0.97	MV16**21C*

HEATING

HEATING INDOOR MODEL	CAPACITY	POWER	FURNACE MODEL
*FEM4P36**A*	1.00	1.00	
FCM4X24****	1.01	1.01	
FCM4X36****	1.00	0.98	
FCM4X48****	1.01	0.94	
FCM4X60****	1.02	0.92	
FEA4X36**A*	1.00	1.02	
FEM4P42**A*	1.02	0.96	
FEM4X35**A*	1.01	0.99	
FEM4X36**A*	1.02	0.97	
FEM4X36**B*	1.00	1.00	
FEM4X42**A*	1.02	0.98	
FEM4X42**B*	1.01	0.96	
FS(M,U)4P42**A*	1.02	1.00	
FVM4X24****	1.01	1.00	
FVM4X36****	1.00	0.98	
FVM4X60****	1.02	0.92	
FXM4X36**A*	1.01	0.95	
FXM4X42**A*	1.01	0.95	
EA*4X36*14A*	1.01	1.04	*8MX*0451408**
EHD4X36A**	1.01	1.01	*8MX*0451408**
EHD4X42A**	1.02	1.00	*8MX*0451408**
EA*4X36*17A*	1.00	1.01	*8MX*0701716**
EHD4X36A**	1.01	0.99	*8MX*0701716**
EHD4X42A**	1.01	0.98	*8MX*0701716**
EN(A,D,W)4X36*17**	0.99	1.02	*8MX*0701716**
END4X42*17**	1.01	0.99	*8MX*0701716**
ENH4X36*17**	0.99	1.02	*8MX*0701716**
EA*4X36*21A*	0.99	0.97	*8MX*0902116**
EA*4X42*21A*	0.99	0.96	*8MX*0902116**

HEATING INDOOR MODEL	CAPACITY	POWER	FURNACE MODEL
EHD4X36A**	1.00	0.96	*8MX*0902116**
EHD4X42A**	1.00	0.95	*8MX*0902116**
EN(A,D)4X36*21**	0.99	0.98	*8MX*0902116**
EN(A,D,W)4X42*21**	0.99	0.97	*8MX*0902116**
ENH4X42*21**	0.99	0.97	*8MX*0902116**
EA*4X36*21A*	0.99	0.97	*8MX*1102120**
EA*4X42*21A*	0.99	0.96	*8MX*1102120**
EHD4X36A**	1.00	0.95	*8MX*1102120**
EHD4X42A**	1.01	0.94	*8MX*1102120**
EN(A,D)4X36*21**	0.99	0.98	*8MX*1102120**
EN(A,D,W)4X42*21**	0.99	0.96	*8MX*1102120**
ENH4X42*21**	0.99	0.96	*8MX*1102120**
EA*4X36*14A*	0.99	1.01	*8MV*0701412**
EHD4X36A**	1.00	0.98	*8MV*0701412**
EHD4X42A**	1.00	0.97	*8MV*0701412**
EA*4X36*17A*	0.99	0.99	*8MV*0901716**
EHD4X36A**	0.99	0.97	*8MV*0901716**
EHD4X42A**	0.99	0.96	*8MV*0901716**
EN(A,D,W)4X36*17**	0.99	0.99	*8MV*0901716**
END4X42*17**	0.99	0.97	*8MV*0901716**
ENH4X36*17**	0.99	0.99	*8MV*0901716**
EA*4X36*21A*	0.99	0.98	*8MV*1102120**
EA*4X42*21A*	0.99	0.97	*8MV*1102120**
EHD4X36A**	0.99	0.96	*8MV*1102120**
EHD4X42A**	1.00	0.96	*8MV*1102120**
EN(A,D)4X36*21**	0.99	0.99	*8MV*1102120**
EN(A,D,W)4X42*21**	0.99	0.98	*8MV*1102120**
ENH4X42*21**	0.99	0.98	*8MV*1102120**
EA*4X42*24A*	0.99	0.97	*8MV*1352422**
EHD4X36A**	0.99	0.96	*8MV*1352422**
EHD4X42A**	0.99	0.95	*8MV*1352422**
EA*4X36*17A*	1.00	1.01	*9MX*0601714A**
EHD4X36A**	1.01	0.99	*9MX*0601714A**
EHD4X42A**	1.01	0.98	*9MX*0601714A**
EN(A,D,W)4X36*17**	0.99	1.02	*9MX*0601714A**
END4X42*17**	1.01	0.99	*9MX*0601714A**
ENH4X36*17**	0.99	1.02	*9MX*0601714A**
EA*4X36*17A*	0.99	1.00	*9MX*0801716A**
EHD4X36A**	0.99	0.98	*9MX*0801716A**
EHD4X42A**	1.00	0.97	*9MX*0801716A**
EN(A,D,W)4X36*17**	0.99	1.01	*9MX*0801716A**
END4X42*17**	0.99	0.98	*9MX*0801716A**
ENH4X36*17**	0.99	1.01	*9MX*0801716A**
EA*4X36*21A*	1.02	0.98	*9MX*1002120A**

HEATING INDOOR MODEL	CAPACITY	POWER	FURNACE MODEL
EN(A,D,W)4X36*17**	1.00	1.04	OLV098A12A
END4X42*17**	1.01	1.01	OLV098A12A
EA*4X36*21A*	1.00	0.99	OLV112A16A
EA*4X42*21A*	1.00	0.98	OLV112A16A
EN(A,D)4X36*21**	1.00	1.01	OLV112A16A
EN(A,D,W)4X42*21**	1.01	0.99	OLV112A16A
EA*4X42*24A*	1.02	0.96	OLV154F20A
EA*4X36*17A*	1.00	1.02	OMV098J12A
EHD4X36A**	1.01	0.99	OMV098J12A
EHD4X42A**	1.01	0.99	OMV098J12A
EN(A,D,W)4X36*17**	1.00	1.03	OMV098J12A
END4X42*17**	1.01	1.00	OMV098J12A
ENH4X36*17**	1.00	1.03	OMV098J12A
EA*4X36*17A*	0.99	1.00	OMV112K14A
EHD4X36A**	1.00	0.98	OMV112K14A
EHD4X42A**	1.01	0.97	OMV112K14A
EN(A,D,W)4X36*17**	0.99	1.01	OMV112K14A
END4X42*17**	1.00	0.98	OMV112K14A
ENH4X36*17**	0.99	1.01	OMV112K14A
EA*4X42*24A*	1.01	0.98	OMV154L20A
EHD4X36A**	1.01	0.97	OMV154L20A
EHD4X42A**	1.01	0.96	OMV154L20A
EA*4X36*14A*	1.01	1.01	MV08**14C*
EA*4X36*17A*	1.01	0.99	MV12**17C*
EA*4X36*21A*	1.01	0.98	MV16**21C*
EA*4X42*21A*	1.01	0.97	MV16**21C*
EA*4X42*24A*	1.01	0.98	MV20**24C*
EHD4X36A**	1.01	1.00	
EHD4X36A**	1.01	0.98	MV08**14C*
EHD4X36A**	1.02	0.97	MV12**17C*
EHD4X36A**	1.01	0.96	MV16**21C*
EHD4X36A**	1.01	0.97	MV20**24C*
EHD4X42A**	1.02	1.00	
EHD4X42A**	1.01	0.97	MV08**14C*
EHD4X42A**	1.02	0.96	MV12**17C*
EHD4X42A**	1.02	0.96	MV16**21C*
EHD4X42A**	1.01	0.96	MV20**24C*
EN(A,D)4X36*21**	1.01	0.99	MV16**21C*
EN(A,D,W)4X36*17**	1.01	1.00	MV12**17C*
EN(A,D,W)4X42*21**	1.01	0.98	MV16**21C*
END4X42*17**	1.02	0.97	MV12**17C*
ENH4X36*17**	1.01	1.00	MV12**17C*
ENH4X42*21**	1.01	0.98	MV16**21C*

HEATING INDOOR MODEL	CAPACITY	POWER	FURNACE MODEL
EN(A,D,W)4X36*17**	0.99	1.02	*9MA*0801714A**
END4X42*17**	0.99	0.99	*9MA*0801714A**
ENH4X36*17**	0.99	1.02	*9MA*0801714A**
EA*4X36*21A*	0.98	0.98	*9MA*0802120A**
EA*4X42*21A*	0.98	0.97	*9MA*0802120A**
EHD4X36A**	0.99	0.97	*9MA*0802120A**
EHD4X42A**	0.99	0.96	*9MA*0802120A**
EN(A,D)4X36*21**	0.98	0.99	*9MA*0802120A**
EN(A,D,W)4X42*21**	0.99	0.98	*9MA*0802120A**
ENH4X42*21**	0.99	0.98	*9MA*0802120A**
EA*4X36*21A*	0.98	0.98	*9MA*1002122A**
EA*4X42*21A*	0.99	0.97	*9MA*1002122A**
EHD4X36A**	0.99	0.96	*9MA*1002122A**
EHD4X42A**	0.99	0.95	*9MA*1002122A**
EN(A,D)4X36*21**	0.99	0.99	*9MA*1002122A**
EN(A,D,W)4X42*21**	0.99	0.98	*9MA*1002122A**
ENH4X42*21**	0.99	0.98	*9MA*1002122A**
EA*4X42*24A*	0.98	0.98	*9MA*1202422A**
EHD4X36A**	0.99	0.97	*9MA*1202422A**
EHD4X42A**	0.99	0.96	*9MA*1202422A**
EA*4X36*21A*	0.98	1.00	*9MA*0602120A**
EA*4X42*21A*	0.99	0.99	*9MA*0602120A**
EHD4X36A**	0.99	0.98	*9MA*0602120A**
EHD4X42A**	0.99	0.97	*9MA*0602120A**
EN(A,D)4X36*21**	0.99	1.02	*9MA*0602120A**
EN(A,D,W)4X42*21**	0.99	0.99	*9MA*0602120A**
ENH4X42*21**	0.99	0.99	*9MA*0602120A**
EA*4X36*17A*	0.99	1.00	NOMV106D12*
EHD4X36A**	0.99	0.98	NOMV106D12*
EHD4X42A**	0.99	0.97	NOMV106D12*
EN(A,D,W)4X36*17**	0.99	1.02	NOMV106D12*
END4X42*17**	0.99	0.99	NOMV106D12*
ENH4X36*17**	0.99	1.02	NOMV106D12*
EA*4X36*21A*	0.99	0.99	NOMV156E19*
EA*4X42*21A*	0.99	0.98	NOMV156E19*
EHD4X36A**	0.99	0.97	NOMV156E19*
EHD4X42A**	1.00	0.97	NOMV156E19*
EN(A,D)4X36*21**	0.99	1.00	NOMV156E19*
EN(A,D,W)4X42*21**	0.99	0.98	NOMV156E19*
ENH4X42*21**	0.99	0.98	NOMV156E19*
EA*4X36*17A*	0.99	1.02	OLV098A12A

EA*4X42*21A*	1.02	0.98	*9MX*1002120A**
EHD4X36A**	1.03	0.98	*9MX*1002120A**
EHD4X42A**	1.03	0.96	*9MX*1002120A**
HEATING INDOOR MODEL	**CAPACITY**	**POWER**	**FURNACE MODEL**
EN(A,D)4X36*21**	1.02	1.00	*9MX*1002120A**
EN(A,D,W)4X42*21**	1.02	0.99	*9MX*1002120A**
ENH4X42*21**	1.02	0.99	*9MX*1002120A**
EA*4X36*17A*	1.01	1.02	*9MV*0601714A**
EHD4X36A**	1.01	0.99	*9MV*0601714A**
EHD4X42A**	1.01	0.99	*9MV*0601714A**
EN(A,D,W)4X36*17**	1.01	1.04	*9MV*0601714A**
END4X42*17**	1.02	1.01	*9MV*0601714A**
ENH4X36*17**	1.01	1.04	*9MV*0601714A**
EA*4X36*17A*	1.01	1.01	*9MV*0801716A**
EHD4X36A**	1.02	1.00	*9MV*0801716A**
EHD4X42A**	1.01	0.98	*9MV*0801716A**
EN(A,D,W)4X36*17**	1.01	1.03	*9MV*0801716A**
END4X42*17**	1.01	1.00	*9MV*0801716A**
ENH4X36*17**	1.01	1.03	*9MV*0801716A**
EA*4X36*21A*	1.01	1.00	*9MV*0802120A**
EA*4X42*21A*	1.01	0.99	*9MV*0802120A**
EHD4X36A**	1.01	0.98	*9MV*0802120A**
EHD4X42A**	1.01	0.97	*9MV*0802120A**
EN(A,D)4X36*21**	1.00	1.01	*9MV*0802120A**
EN(A,D,W)4X42*21**	1.01	0.99	*9MV*0802120A**
ENH4X42*21**	1.01	0.99	*9MV*0802120A**
EA*4X36*21A*	1.00	0.99	*9MV*1002120A**
EA*4X42*21A*	1.01	0.99	*9MV*1002120A**
EHD4X36A**	1.01	0.98	*9MV*1002120A**
EHD4X42A**	1.01	0.97	*9MV*1002120A**
EN(A,D)4X36*21**	1.00	1.01	*9MV*1002120A**
EN(A,D,W)4X42*21**	1.01	0.99	*9MV*1002120A**
ENH4X42*21**	1.01	0.99	*9MV*1002120A**
EA*4X42*24A*	1.01	0.99	*9MV*1202422A**
EHD4X36A**	1.01	0.98	*9MV*1202422A**
EHD4X42A**	1.02	0.97	*9MV*1202422A**
EA*4X36*17A*	0.99	1.02	*9MA*0601714A**
EHD4X36A**	0.99	1.00	*9MA*0601714A**
EHD4X42A**	0.99	0.99	*9MA*0601714A**
EN(A,D,W)4X36*17**	0.99	1.03	*9MA*0601714A**
END4X42*17**	0.99	1.00	*9MA*0601714A**
ENH4X36*17**	0.99	1.03	*9MA*0601714A**
EA*4X36*17A*	0.98	1.00	*9MA*0801714A**
EHD4X36A**	0.99	0.99	*9MA*0801714A**
EHD4X42A**	0.99	0.98	*9MA*0801714A**

EXPANDED DATA (3–1/2 tons)

Cooling

EVAPORATOR AIR		CONDENSER ENTERING AIR TEMPERATURES deg F (C)																	
		75 (24)			85 (29)			95 (35)			105 (41)			115 (46)			125 (52)		
		Capacity MBtuh		Total System KW	Capacity MBtuh		Total System KW	Capacity MBtuh		Total System KW	Capacity MBtuh		Total System KW	Capacity MBtuh		Total System KW	Capacity MBtuh		Total System KW
CFM	EWB	Total	Sens		Total	Sens		Total	Sens		Total	Sens		Total	Sens		Total	Sens	
N4H342A(G)KF, N4H342GHF Outdoor Section With FEM4P42**A* Indoor Section																			
1225	57	39.37	39.37	3.01	37.75	37.75	3.34	36.03	36.03	3.69	34.20	34.20	4.07	31.58	31.58	4.44	28.93	28.93	4.89
	62	41.08	37.19	3.01	38.99	36.16	3.34	36.82	35.06	3.70	34.58	33.87	4.08	31.64	31.64	4.44	28.98	28.98	4.89
	63	41.94	30.35	3.01	39.77	29.36	3.34	37.53	28.35	3.70	35.15	27.30	4.09	31.79	25.83	4.45	28.16	24.25	4.86
	67	45.43	31.55	2.98	43.16	30.64	3.34	40.70	29.62	3.72	38.18	28.58	4.12	35.48	27.48	4.56	31.93	26.05	4.98
	72	49.74	25.53	2.94	47.65	24.77	3.32	45.25	23.90	3.72	42.59	22.96	4.15	39.57	21.82	4.63	36.47	20.70	5.14
1400	57	41.05	41.05	3.05	39.30	39.30	3.39	37.49	37.49	3.75	35.56	35.56	4.14	33.40	33.40	4.57	30.34	30.34	4.98
	62	42.10	39.81	3.05	39.92	38.67	3.39	37.73	37.39	3.75	35.61	35.61	4.14	33.44	33.44	4.57	30.39	30.39	4.98
	63	42.91	32.24	3.04	40.63	31.23	3.39	38.26	30.19	3.75	35.81	29.11	4.14	32.72	27.77	4.53	28.86	26.06	4.93
	67	46.38	33.45	3.02	44.09	32.65	3.38	41.50	31.60	3.77	38.83	30.53	4.18	36.08	29.42	4.62	32.97	28.16	5.09
	72	50.61	26.60	2.98	48.50	25.87	3.36	46.07	25.05	3.76	43.36	24.14	4.20	40.38	23.11	4.68	37.02	21.88	5.20
1575	57	42.49	42.49	3.09	40.64	40.64	3.44	38.70	38.70	3.80	36.67	36.67	4.20	34.47	34.47	4.64	31.57	31.57	5.07
	62	43.00	42.10	3.09	40.76	40.76	3.44	38.75	38.75	3.80	36.71	36.71	4.20	34.51	34.51	4.64	31.63	31.63	5.07
	63	43.68	34.03	3.08	41.28	33.00	3.44	38.83	31.93	3.80	36.30	30.82	4.20	33.52	29.59	4.62	29.39	27.70	5.00
	67	47.08	35.20	3.05	44.76	34.43	3.42	42.12	33.50	3.82	39.37	32.39	4.23	36.51	31.23	4.68	33.42	29.94	5.16
	72	51.25	27.56	3.02	49.14	26.89	3.39	46.67	26.10	3.81	43.93	25.24	4.25	40.90	24.23	4.73	37.53	23.06	5.25

Heating

INDOOR AIR		OUTDOOR COIL ENTERING AIR TEMPERATURES deg F (C)																							
		-3 (–19)			7 (–14)			17 (–18)			27 (–3)			37 (3)			47 (8)			57 (14)			67 (19)		
		Capacity MBtuh		Total Sys-tem KW	Capacity MBtuh		Total Sys-tem KW	Capacity MBtuh		Total Sys-tem KW	Capacity MBtuh		Total Sys-tem KW	Capacity MBtuh		Total Sys-tem KW	Capacity MBtuh		Total Sys-tem KW	Capacity MBtuh		Total Sys-tem KW	Capacity MBtuh		Total Sys-tem KW
EDB	CFM	Total	Integ		Total	Integ		Total	Integ		Total	Integ		Total	Integ		Total	Integ		Total	Integ		Total	Integ	
N4H342A(G)KF, N4H342GHF Outdoor Section With FEM4P42**A* Indoor Section																									
65	1225	15.60	14.35	2.64	20.17	18.54	2.75	24.73	22.55	2.85	29.47	26.17	2.95	34.77	31.64	3.05	39.07	39.07	3.08	43.89	43.89	3.10	49.14	49.14	3.09
	1400	15.96	14.69	2.66	20.52	18.86	2.76	25.15	22.93	2.85	29.96	26.61	2.94	35.16	32.00	3.03	39.57	39.57	3.05	44.52	44.52	3.05	49.61	49.61	3.01
	1525	16.17	14.87	2.68	20.75	19.07	2.77	25.41	23.17	2.86	30.27	26.89	2.94	35.42	32.23	3.02	39.87	39.87	3.04	44.90	44.90	3.03	49.76	49.76	2.97
70	1225	14.87	13.68	2.80	19.40	17.83	2.88	23.98	21.87	2.97	28.70	25.49	3.06	34.24	31.16	3.17	38.52	38.52	3.21	43.24	43.24	3.23	48.43	48.43	3.23
	1400	15.18	13.97	2.82	19.76	18.16	2.90	24.40	22.25	2.98	29.18	25.91	3.06	34.67	31.55	3.15	39.00	39.00	3.17	43.85	43.85	3.18	48.95	48.95	3.15
	1525	15.33	14.10	2.84	20.00	18.37	2.91	24.66	22.49	2.99	29.49	26.19	3.06	34.94	31.79	3.14	39.30	39.30	3.16	44.23	44.23	3.16	49.17	49.17	3.11
75	1225	14.04	12.91	2.96	18.60	17.10	3.03	23.21	21.16	3.11	27.91	24.79	3.19	32.98	30.01	3.28	38.00	38.00	3.34	42.60	42.60	3.37	47.73	47.73	3.38
	1400	14.34	13.20	2.99	18.96	17.42	3.04	23.61	21.53	3.11	28.39	25.21	3.18	34.12	31.05	3.28	38.46	38.46	3.30	43.19	43.19	3.31	48.30	48.30	3.29
	1525	14.55	13.38	3.01	19.19	17.63	3.05	23.88	21.77	3.12	28.69	25.48	3.18	34.39	31.29	3.27	38.75	38.75	3.29	43.56	43.56	3.29	48.57	48.57	3.25

MULTIPLIERS FOR COMBINATION RATINGS

COOLING			
COOLING INDOOR MODEL	CAPACITY	POWER	FURNACE MODEL
*FEM4P42**A*	1.00	1.00	
FCM4X36****	0.99	0.96	
FCM4X48****	1.00	0.94	
FEM4P48**A*	1.00	1.00	
FEM4X42**A*	1.00	1.00	
FEM4X42**B*	1.00	0.98	
FEM4X48**A*	1.00	0.97	
FEM4X48**B*	1.00	0.98	
FVM4X36****	0.99	0.97	
FVM4X48****	1.00	0.94	
FXM4X42**A*	1.00	0.98	
FXM4X48**A*	1.00	0.96	
EA*4X42*21A*	0.99	0.97	*8MX*0902116**
EA*4X48*21A*	1.00	0.97	*8MX*0902116**
EHD4X42A**	1.00	0.97	*8MX*0902116**
EHD4X48A**	1.00	0.97	*8MX*0902116**
EN(A,D,W)4X42*21**	0.99	0.97	*8MX*0902116**
EN(A,D,W)4X48*21**	1.00	0.97	*8MX*0902116**
ENH4X42*21**	0.99	0.97	*8MX*0902116**
ENH4X48*21**	1.00	0.97	*8MX*0902116**
EA*4X42*21A*	1.00	0.97	*8MX*1102120**
EA*4X48*21A*	1.00	0.97	*8MX*1102120**
EHD4X42A**	1.00	0.97	*8MX*1102120**
EHD4X48A**	1.00	0.96	*8MX*1102120**
EN(A,D,W)4X42*21**	0.99	0.97	*8MX*1102120**
EN(A,D,W)4X48*21**	1.00	0.96	*8MX*1102120**
ENH4X42*21**	0.99	0.97	*8MX*1102120**
ENH4X48*21**	1.00	0.96	*8MX*1102120**
EA*4X42*24A*	1.00	0.98	*8MX*1352420**
EA*4X48*24A*	1.00	0.97	*8MX*1352420**
EHD4X42A**	1.00	0.97	*8MX*1352420**
EHD4X48A**	1.00	0.97	*8MX*1352420**
EN(A,D)4X48*24**	1.00	0.97	*8MX*1352420**
EHD4X42A**	1.00	1.00	*8MV*0701412**
EHD4X48A**	1.00	1.00	*8MV*0701412**
EA*4X48*17A*	1.00	0.97	*8MV*0901716**
EHD4X42A**	1.00	0.97	*8MV*0901716**
EHD4X48A**	1.00	0.97	*8MV*0901716**
END4X42*17**	1.00	0.98	*8MV*0901716**
EA*4X42*21A*	0.99	0.97	*8MV*1102120**
EA*4X48*21A*	1.00	0.98	*8MV*1102120**
EHD4X42A**	1.00	0.97	*8MV*1102120**
EHD4X48A**	1.00	0.97	*8MV*1102120**
EN(A,D,W)4X42*21**	0.99	0.97	*8MV*1102120**
EN(A,D,W)4X48*21**	1.00	0.97	*8MV*1102120**

COOLING INDOOR MODEL	CAPACITY	POWER	FURNACE MODEL
ENH4X42*21**	0.99	0.97	*8MV*1102120**
ENH4X48*21**	1.00	0.97	*8MV*1102120**
EA*4X42*24A*	0.99	0.96	*8MV*1352422**
EA*4X48*24A*	1.00	0.97	*8MV*1352422**
EHD4X42A**	1.00	0.96	*8MV*1352422**
EHD4X48A**	1.00	0.96	*8MV*1352422**
EN(A,D)4X48*24**	1.00	0.96	*8MV*1352422**
EHD4X48A**	1.00	1.00	*9MX*0601714A**
EA*4X48*17A*	1.00	1.00	*9MX*0801716A**
EHD4X42A**	1.00	1.00	*9MX*0801716A**
EHD4X48A**	1.00	1.00	*9MX*0801716A**
EA*4X42*21A*	1.00	0.98	*9MX*0802120A**
EA*4X48*21A*	1.00	0.98	*9MX*0802120A**
EHD4X42A**	1.00	0.97	*9MX*0802120A**
EHD4X48A**	1.00	0.97	*9MX*0802120A**
EN(A,D,W)4X42*21**	0.99	0.97	*9MX*0802120A**
EN(A,D,W)4X48*21**	1.00	0.97	*9MX*0802120A**
ENH4X42*21**	0.99	0.97	*9MX*0802120A**
ENH4X48*21**	1.00	0.97	*9MX*0802120A**
EA*4X42*21A*	0.99	0.97	*9MX*1002120A**
EA*4X48*21A*	1.00	0.97	*9MX*1002120A**
EHD4X42A**	1.00	0.97	*9MX*1002120A**
EHD4X48A**	1.00	0.97	*9MX*1002120A**
EN(A,D,W)4X42*21**	0.99	0.97	*9MX*1002120A**
EN(A,D,W)4X48*21**	1.00	0.97	*9MX*1002120A**
ENH4X42*21**	0.99	0.97	*9MX*1002120A**
ENH4X48*21**	1.00	0.97	*9MX*1002120A**
EA*4X42*24A*	1.00	0.98	*9MX*1202422A**
EA*4X48*24A*	1.00	0.98	*9MX*1202422A**
EHD4X42A**	1.00	0.97	*9MX*1202422A**
EHD4X48A**	1.00	0.97	*9MX*1202422A**
EN(A,D)4X48*24**	1.00	0.97	*9MX*1202422A**
EA*4X48*17A*	1.00	1.00	*9MV*0801716A**
EHD4X42A**	1.00	1.00	*9MV*0801716A**
EHD4X48A**	1.00	1.00	*9MV*0801716A**
EA*4X42*21A*	0.99	0.97	*9MV*0802120A**
EA*4X48*21A*	1.00	0.98	*9MV*0802120A**
EHD4X42A**	1.00	0.97	*9MV*0802120A**
EHD4X48A**	1.00	0.97	*9MV*0802120A**
EN(A,D,W)4X42*21**	0.99	0.97	*9MV*0802120A**
EN(A,D,W)4X48*21**	1.00	0.97	*9MV*0802120A**
ENH4X42*21**	0.99	0.97	*9MV*0802120A**
ENH4X48*21**	1.00	0.97	*9MV*0802120A**
EA*4X42*21A*	0.99	0.97	*9MV*1002120A**
EA*4X48*21A*	1.00	0.97	*9MV*1002120A**
EHD4X42A**	1.00	0.97	*9MV*1002120A**

COOLING INDOOR MODEL	CAPACITY	POWER	FURNACE MODEL
EHD4X48A**	1.00	0.97	*9MV*1002120A**
EN(A,D,W)4X42*21**	0.99	0.97	*9MV*1002120A**
EN(A,D,W)4X48*21**	1.00	0.97	*9MV*1002120A**
ENH4X42*21**	0.99	0.97	*9MV*1002120A**
ENH4X48*21**	1.00	0.97	*9MV*1002120A**
EA*4X42*24A*	0.99	0.97	*9MV*1202422A**
EA*4X48*24A*	1.00	0.97	*9MV*1202422A**
EHD4X42A**	1.00	0.97	*9MV*1202422A**
EHD4X48A**	1.00	0.97	*9MV*1202422A**
EN(A,D)4X48*24**	1.00	0.97	*9MV*1202422A**
EHD4X48A**	1.00	1.00	*9MA*0601714A**
EA*4X48*17A*	1.00	1.00	*9MA*0801714A**
EHD4X42A**	1.00	1.00	*9MA*0801714A**
EHD4X48A**	1.00	0.98	*9MA*0801714A**
EA*4X42*21A*	0.98	0.96	*9MA*0802120A**
EA*4X48*21A*	1.00	0.98	*9MA*0802120A**
EHD4X42A**	1.00	0.97	*9MA*0802120A**
EHD4X48A**	1.00	0.97	*9MA*0802120A**
EN(A,D,W)4X42*21**	0.99	0.97	*9MA*0802120A**
EN(A,D,W)4X48*21**	1.00	0.97	*9MA*0802120A**
ENH4X42*21**	0.99	0.97	*9MA*0802120A**
ENH4X48*21**	1.00	0.97	*9MA*0802120A**
EA*4X42*21A*	0.99	0.97	*9MA*1002122A**
EA*4X48*21A*	1.00	0.97	*9MA*1002122A**
EHD4X42A**	1.00	0.97	*9MA*1002122A**
EHD4X48A**	1.00	0.97	*9MA*1002122A**
EN(A,D,W)4X42*21**	0.99	0.97	*9MA*1002122A**
EN(A,D,W)4X48*21**	1.00	0.97	*9MA*1002122A**
ENH4X42*21**	0.99	0.97	*9MA*1002122A**
ENH4X48*21**	1.00	0.97	*9MA*1002122A**
EA*4X42*24A*	0.99	0.97	*9MA*1202422A**
EA*4X48*24A*	1.00	0.97	*9MA*1202422A**
EHD4X42A**	1.00	0.97	*9MA*1202422A**
EHD4X48A**	1.00	0.97	*9MA*1202422A**
EN(A,D)4X48*24**	1.00	0.97	*9MA*1202422A**
EA*4X48*21A*	0.99	0.99	*9MA*0602120A**
EHD4X42A**	1.00	0.98	*9MA*0602120A**
EHD4X48A**	1.00	0.98	*9MA*0602120A**
EN(A,D,W)4X48*21**	1.00	0.98	*9MA*0602120A**
ENH4X48*21**	1.00	0.98	*9MA*0602120A**
EA*4X42*21A*	0.99	0.97	NOMV156E19*
EA*4X48*21A*	1.00	0.98	NOMV156E19*
EHD4X42A**	1.00	0.97	NOMV156E19*
EHD4X48A**	1.00	0.97	NOMV156E19*
EN(A,D,W)4X42*21**	0.99	0.97	NOMV156E19*
EN(A,D,W)4X48*21**	1.00	0.97	NOMV156E19*

COOLING INDOOR MODEL	CAPACITY	POWER	FURNACE MODEL
ENH4X42*21**	0.99	0.97	NOMV156E19*
ENH4X48*21**	1.00	0.97	NOMV156E19*
EN(A,D,W)4X48*21**	1.00	1.00	OLV112A16A
EA*4X42*24A*	1.00	0.97	OLV154F20A
EA*4X48*24A*	1.00	0.97	OLV154F20A
EN(A,D)4X48*24**	1.00	0.96	OLV154F20A
EA*4X48*17A*	1.00	1.00	OMV112K14A
EHD4X42A**	1.00	1.00	OMV112K14A
EHD4X48A**	1.00	1.00	OMV112K14A
EA*4X42*24A*	0.99	0.96	OMV154L20A
EA*4X48*24A*	1.00	0.96	OMV154L20A
EHD4X42A**	1.00	0.96	OMV154L20A
EHD4X48A**	1.00	0.96	OMV154L20A
EN(A,D)4X48*24**	1.00	0.96	OMV154L20A
EA*4X42*21A*	1.00	0.97	MV16**21C*
EA*4X42*24A*	0.99	0.96	MV20**24C*
EA*4X48*17A*	1.00	0.97	MV12**17C*
EA*4X48*21A*	1.00	0.97	MV16**21C*
EA*4X48*24A*	1.00	0.96	MV20**24C*
EHD4X42A**	1.00	0.97	MV12**17C*
EHD4X42A**	1.00	0.96	MV16**21C*
EHD4X42A**	1.00	0.96	MV20**24C*
EHD4X48A**	1.00	0.97	MV12**17C*
EHD4X48A**	1.00	0.96	MV16**21C*
EHD4X48A**	1.00	0.96	MV20**24C*
EN(A,D)4X48*24**	1.00	0.96	MV20**24C*
EN(A,D,W)4X42*21**	1.00	0.98	MV16**21C*
EN(A,D,W)4X48*21**	1.00	0.96	MV16**21C*
END4X42*17**	1.00	0.98	MV12**17C*
ENH4X42*21**	1.00	0.98	MV16**21C*
ENH4X48*21**	1.00	0.96	MV16**21C*

HEATING

HEATING INDOOR MODEL	CAPACITY	POWER	FURNACE MODEL
*FEM4P42**A*	1.00	1.00	
FCM4X36****	0.97	1.00	
FCM4X48****	0.99	0.96	
FEM4P48**A*	0.99	0.98	
FEM4X42**A*	1.00	1.00	
FEM4X42**B*	0.99	0.99	
FEM4X48**A*	1.00	0.96	
FEM4X48**B*	0.99	0.98	
FVM4X36****	0.99	1.01	
FVM4X48****	0.99	0.96	
FXM4X42**A*	0.99	0.98	
FXM4X48**A*	0.99	0.94	
EA*4X42*21A*	0.97	1.00	*8MX*0902116**
EA*4X48*21A*	0.99	0.98	*8MX*0902116**

HEATING INDOOR MODEL	CAPACITY	POWER	FURNACE MODEL
EHD4X42A**	0.99	0.98	*8MX*0902116**
EHD4X48A**	0.99	0.98	*8MX*0902116**
EN(A,D,W)4X42*21**	0.97	1.00	*8MX*0902116**
EN(A,D,W)4X48*21**	0.99	0.98	*8MX*0902116**
ENH4X42*21**	0.97	1.00	*8MX*0902116**
ENH4X48*21**	0.99	0.98	*8MX*0902116**
EA*4X42*21A*	0.97	0.99	*8MX*1102120**
EA*4X48*21A*	0.97	0.97	*8MX*1102120**
EHD4X42A**	0.97	0.96	*8MX*1102120**
EHD4X48A**	0.99	0.97	*8MX*1102120**
EN(A,D,W)4X42*21**	0.97	1.00	*8MX*1102120**
EN(A,D,W)4X48*21**	0.97	0.96	*8MX*1102120**
ENH4X42*21**	0.97	1.00	*8MX*1102120**
ENH4X48*21**	0.97	0.96	*8MX*1102120**
EA*4X42*24A*	0.97	0.99	*8MX*1352420**
EA*4X48*24A*	0.99	0.98	*8MX*1352420**
EHD4X42A**	0.99	0.98	*8MX*1352420**
EHD4X48A**	0.99	0.98	*8MX*1352420**
EN(A,D)4X48*24**	0.99	0.98	*8MX*1352420**
EHD4X42A**	0.99	1.00	*8MV*0701412**
EHD4X48A**	0.99	1.00	*8MV*0701412**
EA*4X48*17A*	0.99	0.97	*8MV*0901716**
EHD4X42A**	0.97	0.97	*8MV*0901716**
EHD4X48A**	0.99	0.98	*8MV*0901716**
END4X42*17**	0.97	0.99	*8MV*0901716**
EA*4X42*21A*	0.97	1.00	*8MV*1102120**
EA*4X48*21A*	0.97	0.97	*8MV*1102120**
EHD4X42A**	0.99	0.99	*8MV*1102120**
EHD4X48A**	0.99	0.98	*8MV*1102120**
EN(A,D,W)4X42*21**	0.97	1.01	*8MV*1102120**
EN(A,D,W)4X48*21**	0.97	0.97	*8MV*1102120**
ENH4X42*21**	0.97	1.01	*8MV*1102120**
ENH4X48*21**	0.97	0.97	*8MV*1102120**
EA*4X42*24A*	0.96	0.98	*8MV*1352422**
EA*4X48*24A*	0.97	0.96	*8MV*1352422**
EHD4X42A**	0.97	0.97	*8MV*1352422**
EHD4X48A**	0.97	0.96	*8MV*1352422**
EN(A,D)4X48*24**	0.97	0.96	*8MV*1352422**
EHD4X48A**	1.00	1.01	*9MX*0601714A**
EA*4X48*17A*	1.00	0.99	*9MX*0801716A**
EHD4X42A**	0.99	1.00	*9MX*0801716A**
EHD4X48A**	0.99	0.99	*9MX*0801716A**
EA*4X42*21A*	0.97	1.00	*9MX*0802120A**
EA*4X48*21A*	0.99	0.98	*9MX*0802120A**
EHD4X42A**	0.99	0.98	*9MX*0802120A**
EHD4X48A**	0.99	0.98	*9MX*0802120A**
EN(A,D,W)4X42*21**	0.97	1.00	*9MX*0802120A**

HEATING INDOOR MODEL	CAPACITY	POWER	FURNACE MODEL
EN(A,D,W)4X48*21**	0.99	0.98	*9MX*0802120A**
ENH4X42*21**	0.97	1.00	*9MX*0802120A**
ENH4X48*21**	0.99	0.98	*9MX*0802120A**
EA*4X42*21A*	0.97	1.00	*9MX*1002120A**
EA*4X48*21A*	0.97	0.97	*9MX*1002120A**
EHD4X42A**	0.97	0.97	*9MX*1002120A**
EHD4X48A**	0.99	0.98	*9MX*1002120A**
EN(A,D,W)4X42*21**	0.97	1.01	*9MX*1002120A**
EN(A,D,W)4X48*21**	0.97	0.97	*9MX*1002120A**
ENH4X42*21**	0.97	1.01	*9MX*1002120A**
ENH4X48*21**	0.97	0.97	*9MX*1002120A**
EA*4X42*24A*	0.99	1.00	*9MX*1202422A**
EA*4X48*24A*	0.99	0.98	*9MX*1202422A**
EHD4X42A**	0.99	0.98	*9MX*1202422A**
EHD4X48A**	0.99	0.97	*9MX*1202422A**
EN(A,D)4X48*24**	0.99	0.97	*9MX*1202422A**
EA*4X48*17A*	1.00	1.00	*9MV*0801716A**
EHD4X42A**	0.99	1.00	*9MV*0801716A**
EHD4X48A**	0.99	1.00	*9MV*0801716A**
EA*4X42*21A*	0.99	1.02	*9MV*0802120A**
EA*4X48*21A*	0.99	0.99	*9MV*0802120A**
EHD4X42A**	0.99	0.99	*9MV*0802120A**
EHD4X48A**	1.00	0.99	*9MV*0802120A**
EN(A,D,W)4X42*21**	0.99	1.02	*9MV*0802120A**
EN(A,D,W)4X48*21**	0.99	0.99	*9MV*0802120A**
ENH4X42*21**	0.99	1.02	*9MV*0802120A**
ENH4X48*21**	0.99	0.99	*9MV*0802120A**
EA*4X42*21A*	0.99	1.02	*9MV*1002120A**
EA*4X48*21A*	0.99	0.99	*9MV*1002120A**
EHD4X42A**	0.99	0.99	*9MV*1002120A**
EHD4X48A**	0.99	0.98	*9MV*1002120A**
EN(A,D,W)4X42*21**	0.97	1.01	*9MV*1002120A**
EN(A,D,W)4X48*21**	0.99	0.98	*9MV*1002120A**
ENH4X42*21**	0.99	1.02	*9MV*1002120A**
ENH4X48*21**	0.99	0.98	*9MV*1002120A**
EA*4X42*24A*	0.97	1.00	*9MV*1202422A**
EA*4X48*24A*	0.99	0.99	*9MV*1202422A**
EHD4X42A**	0.99	0.99	*9MV*1202422A**
EHD4X48A**	1.00	0.99	*9MV*1202422A**
EN(A,D)4X48*24**	0.99	0.98	*9MV*1202422A**
EHD4X48A**	0.99	1.02	*9MA*0601714A**
EA*4X48*17A*	0.97	0.99	*9MA*0801714A**
EHD4X42A**	0.99	1.01	*9MA*0801714A**
EHD4X48A**	0.99	1.00	*9MA*0801714A**
EA*4X42*21A*	0.96	1.00	*9MA*0802120A**
EA*4X48*21A*	0.97	0.99	*9MA*0802120A**
EHD4X42A**	0.97	0.99	*9MA*0802120A**

HEATING INDOOR MODEL	CAPACITY	POWER	FURNACE MODEL
EHD4X42A**	0.97	0.97	OMV154L20A
EHD4X48A**	0.99	0.97	OMV154L20A
EN(A,D)4X48*24**	0.97	0.96	OMV154L20A
EA*4X42*21A*	0.99	1.00	MV16**21C*
EA*4X42*24A*	0.97	0.99	MV20**24C*
EA*4X48*17A*	0.99	0.96	MV12**17C*
EA*4X48*21A*	0.99	0.97	MV16**21C*
EA*4X48*24A*	0.99	0.98	MV20**24C*
EHD4X42A**	1.00	0.99	MV12**17C*
EHD4X42A**	0.99	0.97	MV16**21C*
EHD4X42A**	0.99	0.98	MV20**24C*
EHD4X48A**	1.00	0.98	MV12**17C*
EHD4X48A**	0.99	0.97	MV16**21C*
EHD4X48A**	0.99	0.97	MV20**24C*
EN(A,D)4X48*24**	0.99	0.98	MV20**24C*
EN(A,D,W)4X42*21**	0.99	1.00	MV16**21C*
EN(A,D,W)4X48*21**	0.99	0.97	MV16**21C*
END4X42*17**	0.99	1.00	MV12**17C*
ENH4X42*21**	0.99	1.00	MV16**21C*
ENH4X48*21**	0.99	0.97	MV16**21C*

HEATING INDOOR MODEL	CAPACITY	POWER	FURNACE MODEL
EHD4X48A**	0.97	0.99	*9MA*0602120A**
EN(A,D,W)4X48*21**	0.97	1.00	*9MA*0602120A**
ENH4X48*21**	0.97	1.00	*9MA*0602120A**
EA*4X42*21A*	0.97	1.01	NOMV156E19*
EA*4X48*21A*	0.97	0.99	NOMV156E19*
EHD4X42A**	0.97	0.98	NOMV156E19*
EHD4X48A**	0.97	0.97	NOMV156E19*
EN(A,D,W)4X42*21**	0.97	1.01	NOMV156E19*
EN(A,D,W)4X48*21**	0.97	0.98	NOMV156E19*
ENH4X42*21**	0.97	1.01	NOMV156E19*
ENH4X48*21**	0.97	0.98	NOMV156E19*
EN(A,D,W)4X48*21**	1.00	1.01	OLV112A16A
EA*4X42*24A*	0.99	0.98	OLV154F20A
EA*4X48*24A*	1.00	0.97	OLV154F20A
EN(A,D)4X48*24**	1.00	0.97	OLV154F20A
EA*4X48*17A*	1.00	1.00	OMV112K14A
EHD4X42A**	0.99	1.00	OMV112K14A
EHD4X48A**	0.99	0.99	OMV112K14A
EA*4X42*24A*	0.97	0.99	OMV154L20A
EA*4X48*24A*	0.97	0.97	OMV154L20A

HEATING INDOOR MODEL	CAPACITY	POWER	FURNACE MODEL
EHD4X48A**	0.97	0.98	*9MA*0802120A**
EN(A,D,W)4X42*21**	0.97	1.01	*9MA*0802120A**
EN(A,D,W)4X48*21**	0.97	0.99	*9MA*0802120A**
ENH4X42*21**	0.97	1.01	*9MA*0802120A**
ENH4X48*21**	0.97	0.99	*9MA*0802120A**
EA*4X42*21A*	0.97	1.00	*9MA*1002122A**
EA*4X48*21A*	0.97	0.97	*9MA*1002122A**
EHD4X42A**	0.99	0.98	*9MA*1002122A**
EHD4X48A**	0.99	0.98	*9MA*1002122A**
EN(A,D,W)4X42*21**	0.97	1.00	*9MA*1002122A**
EN(A,D,W)4X48*21**	0.97	0.97	*9MA*1002122A**
ENH4X42*21**	0.97	1.00	*9MA*1002122A**
ENH4X48*21**	0.97	0.97	*9MA*1002122A**
EA*4X42*24A*	0.96	1.00	*9MA*1202422A**
EA*4X48*24A*	0.97	0.99	*9MA*1202422A**
EHD4X42A**	0.97	0.99	*9MA*1202422A**
EHD4X48A**	0.97	0.98	*9MA*1202422A**
EN(A,D)4X48*24**	0.97	0.98	*9MA*1202422A**
EA*4X48*21A*	0.97	1.00	*9MA*0602120A**
EHD4X42A**	0.97	1.00	*9MA*0602120A**

EXPANDED DATA (4 tons)

Cooling

EVAPORATOR AIR		CONDENSER ENTERING AIR TEMPERATURES deg F (C)																	
		75 (24)			85 (29)			95 (35)			105 (41)			115 (46)			125 (52)		
		Capacity MBtuh		Total System KW	Capacity MBtuh		Total System KW	Capacity MBtuh		Total System KW	Capacity MBtuh		Total System KW	Capacity MBtuh		Total System KW	Capacity MBtuh		Total System KW
CFM	EWB	Total	Sens		Total	Sens		Total	Sens		Total	Sens		Total	Sens		Total	Sens	
N4H348A(G)KF, N4H349GH(L)F Outdoor Section With FEM4P48**A Indoor Section																			
1400	57	44.84	44.84	3.32	42.92	42.92	3.70	40.93	40.93	4.11	38.86	38.86	4.55	36.60	36.60	5.05	33.56	33.56	5.57
	62	46.76	41.67	3.34	44.30	40.49	3.72	41.77	39.25	4.12	39.24	37.92	4.56	36.66	36.66	5.06	33.63	33.63	5.57
	63	47.74	33.97	3.34	45.20	32.83	3.73	42.56	31.66	4.13	39.87	30.49	4.57	36.99	29.25	5.06	32.84	27.47	5.54
	67	51.68	35.32	3.36	48.96	34.23	3.77	46.17	33.09	4.19	43.26	31.91	4.64	40.24	30.71	5.14	37.01	29.42	5.71
	72	56.56	28.54	3.38	54.12	27.70	3.82	51.31	26.67	4.26	48.25	25.56	4.72	45.02	24.40	5.24	41.51	23.12	5.82
1600	57	46.75	46.75	3.40	44.70	44.70	3.78	42.55	42.55	4.20	40.36	40.36	4.65	38.00	38.00	5.16	35.38	35.38	5.73
	62	47.86	44.58	3.40	45.34	43.30	3.79	42.77	42.42	4.20	40.41	40.41	4.65	38.05	38.05	5.16	35.43	35.43	5.73
	63	48.79	36.07	3.41	46.10	34.88	3.80	43.34	33.68	4.21	40.55	32.48	4.65	37.59	31.21	5.14	33.69	29.53	5.64
	67	52.69	37.40	3.43	50.00	36.46	3.84	47.00	35.27	4.27	43.99	34.06	4.73	40.86	32.83	5.22	37.56	31.51	5.79
	72	57.44	29.66	3.45	55.02	28.92	3.89	52.17	27.93	4.33	49.07	26.85	4.80	45.76	25.71	5.31	42.25	24.50	5.89
1800	57	48.37	48.37	3.47	46.18	46.18	3.87	43.93	43.93	4.29	41.59	41.59	4.74	39.13	39.13	5.25	36.47	36.47	5.83
	62	48.85	47.20	3.47	46.29	46.29	3.87	43.99	43.99	4.29	41.64	41.64	4.74	39.18	39.18	5.25	36.52	36.52	5.83
	63	49.60	38.01	3.47	46.81	36.86	3.87	43.97	35.64	4.28	41.05	34.39	4.73	38.05	33.09	5.22	34.69	31.59	5.77
	67	53.47	39.41	3.49	50.73	38.51	3.91	47.66	37.39	4.34	44.54	36.15	4.80	41.34	34.87	5.30	37.99	33.50	5.87
	72	58.09	30.71	3.52	55.69	30.04	3.95	52.82	29.12	4.40	49.68	28.08	4.87	46.32	26.95	5.38	42.74	25.74	5.96

Heating

INDOOR AIR		OUTDOOR COIL ENTERING AIR TEMPERATURES deg F (C)																							
		-3 (–19)			7 (–14)			17 (–18)			27 (–3)			37 (3)			47 (8)			57 (14)			67 (19)		
		Capacity MBtuh		Total Sys-tem KW	Capacity MBtuh		Total Sys-tem KW	Capacity MBtuh		Total Sys-tem KW	Capacity MBtuh		Total Sys-tem KW	Capacity MBtuh		Total Sys-tem KW	Capacity MBtuh		Total Sys-tem KW	Capacity MBtuh		Total Sys-tem KW	Capacity MBtuh		Total Sys-tem KW
EDB	CFM	Total	Integ		Total	Integ		Total	Integ		Total	Integ		Total	Integ		Total	Integ		Total	Integ		Total	Integ	
N4H348A(G)KF, N4H3GH(L)F Outdoor Section With FEM4P48**A Indoor Section																									
65	1400	18.42	16.95	3.14	23.65	21.74	3.21	28.90	26.35	3.28	35.25	31.31	3.40	40.02	36.42	3.48	45.07	45.07	3.56	50.81	50.81	3.66	57.16	57.16	3.81
	1600	18.80	17.30	3.19	24.10	22.15	3.24	29.38	26.79	3.30	35.74	31.74	3.40	40.52	36.87	3.46	45.69	45.69	3.53	51.59	51.59	3.61	58.17	58.17	3.72
	1800	19.15	17.61	3.24	24.47	22.49	3.28	29.81	27.18	3.33	36.14	32.10	3.41	40.97	37.28	3.46	46.22	46.22	3.52	52.24	52.24	3.59	58.97	58.97	3.66
70	1400	17.61	16.20	3.27	22.86	21.00	3.34	28.11	25.63	3.42	33.56	29.80	3.50	39.44	35.89	3.63	44.40	44.40	3.71	50.01	50.01	3.82	56.20	56.20	3.97
	1600	17.99	16.55	3.31	23.30	21.41	3.37	28.60	26.08	3.43	34.24	30.41	3.51	39.94	36.35	3.61	45.00	45.00	3.68	50.76	50.76	3.77	57.15	57.15	3.90
	1800	18.34	16.87	3.36	23.68	21.76	3.41	29.03	26.47	3.46	35.39	31.43	3.55	40.40	36.76	3.61	45.52	45.52	3.67	51.40	51.40	3.74	58.01	58.01	3.83
75	1400	16.74	15.40	3.41	22.00	20.22	3.48	27.27	24.87	3.56	32.66	29.01	3.65	38.91	35.41	3.79	43.75	43.75	3.87	49.22	49.22	3.98	55.27	55.27	4.15
	1600	17.12	15.75	3.45	22.44	20.62	3.51	27.77	25.32	3.57	33.25	29.53	3.65	39.42	35.87	3.77	44.33	44.33	3.84	49.95	49.95	3.93	56.19	56.19	4.07
	1800	17.47	16.07	3.50	22.83	20.98	3.55	28.20	25.71	3.60	33.75	29.98	3.66	39.83	36.24	3.77	44.84	44.84	3.83	50.57	50.57	3.90	57.03	57.03	4.01

MULTIPLIERS FOR COMBINATION RATINGS

COOLING			
COOLING INDOOR MODEL	CAPACITY	POWER	FURNACE MODEL
*FEM4P48**A*	1.00	1.00	
FCM4X48****	1.02	0.94	
FCM4X60****	1.02	0.92	
FEM4X48**A*	1.02	0.98	
FEM4X48**B*	1.00	0.98	
FEM4X60**A*	1.02	0.96	
FEM4X60**B*	1.02	0.98	
FS(M,U)4P48**A*	1.01	0.98	
FVM4X48****	1.01	0.95	
FVM4X60****	1.02	0.94	
FXM4X48**A*	1.02	0.96	
FXM4X60**A*	1.02	0.96	
EA*4X48*21A*	0.99	0.96	*8MX*0902116**
EA*4X60*21A*	1.01	0.97	*8MX*0902116**
EHD4X48A**	1.00	0.96	*8MX*0902116**
EHD4X60A**	1.02	0.98	*8MX*0902116**
EN(A,D,W)4X48*21**	1.00	0.97	*8MX*0902116**
ENH4X48*21**	1.00	0.97	*8MX*0902116**
EA*4X48*21A*	0.99	0.95	*8MX*1102120**
EA*4X60*21A*	1.01	0.95	*8MX*1102120**
EHD4X48A**	1.00	0.94	*8MX*1102120**
EHD4X60A**	1.02	0.96	*8MX*1102120**
EN(A,D,W)4X48*21**	1.00	0.94	*8MX*1102120**
ENH4X48*21**	1.00	0.94	*8MX*1102120**
EA*4X48*24A*	0.99	0.95	*8MX*1352420**
EA*4X60*24A*	1.01	0.97	*8MX*1352420**
EHD4X48A**	1.00	0.96	*8MX*1352420**
EHD4X60A**	1.02	0.96	*8MX*1352420**
EN(A,D)4X48*24**	1.00	0.96	*8MX*1352420**
EN(A,D,W)4X60*24**	1.01	0.95	*8MX*1352420**
ENH4X60*24**	1.01	0.95	*8MX*1352420**
EA*4X48*17A*	0.99	0.96	*8MV*0901716**
EHD4X48A**	1.00	0.97	*8MV*0901716**
EHD4X60A**	1.01	0.97	*8MV*0901716**
EA*4X48*21A*	0.99	0.96	*8MV*1102120**
EA*4X60*21A*	1.01	0.97	*8MV*1102120**
EHD4X48A**	1.00	0.97	*8MV*1102120**
EHD4X60A**	1.01	0.95	*8MV*1102120**
EN(A,D,W)4X48*21**	0.99	0.95	*8MV*1102120**
ENH4X48*21**	0.99	0.95	*8MV*1102120**
EA*4X48*24A*	0.99	0.95	*8MV*1352422**
EA*4X60*24A*	1.01	0.95	*8MV*1352422**
EHD4X48A**	1.00	0.96	*8MV*1352422**
EHD4X60A**	1.01	0.95	*8MV*1352422**
EN(A,D)4X48*24**	0.99	0.95	*8MV*1352422**

COOLING INDOOR MODEL	CAPACITY	POWER	FURNACE MODEL
EN(A,D,W)4X60*24**	1.01	0.95	*8MV*1352422**
ENH4X60*24**	1.01	0.95	*8MV*1352422**
EHD4X60A**	1.01	0.99	*9MX*0801716A**
EA*4X48*21A*	0.99	0.96	*9MX*0802120A**
EA*4X60*21A*	1.01	0.97	*9MX*0802120A**
EHD4X48A**	1.00	0.97	*9MX*0802120A**
EHD4X60A**	1.02	0.98	*9MX*0802120A**
EN(A,D,W)4X48*21**	0.99	0.96	*9MX*0802120A**
ENH4X48*21**	0.99	0.96	*9MX*0802120A**
EA*4X48*21A*	0.99	0.96	*9MX*1002120A**
EA*4X60*21A*	1.01	0.97	*9MX*1002120A**
EHD4X48A**	1.00	0.96	*9MX*1002120A**
EHD4X60A**	1.02	0.96	*9MX*1002120A**
EN(A,D,W)4X48*21**	0.99	0.95	*9MX*1002120A**
ENH4X48*21**	0.99	0.95	*9MX*1002120A**
EA*4X48*24A*	0.99	0.96	*9MX*1202422A**
EA*4X60*24A*	1.01	0.97	*9MX*1202422A**
EHD4X48A**	1.00	0.97	*9MX*1202422A**
EHD4X60A**	1.02	0.96	*9MX*1202422A**
EN(A,D)4X48*24**	1.00	0.97	*9MX*1202422A**
EN(A,D,W)4X60*24**	1.01	0.97	*9MX*1202422A**
ENH4X60*24**	1.01	0.97	*9MX*1202422A**
EHD4X60A**	1.01	0.99	*9MV*0801716A**
EA*4X48*21A*	0.98	0.95	*9MV*0802120A**
EA*4X60*21A*	1.01	0.97	*9MV*0802120A**
EHD4X48A**	1.00	0.96	*9MV*0802120A**
EHD4X60A**	1.01	0.95	*9MV*0802120A**
EN(A,D,W)4X48*21**	0.99	0.96	*9MV*0802120A**
ENH4X48*21**	0.99	0.96	*9MV*0802120A**
EA*4X48*21A*	0.99	0.96	*9MV*1002120A**
EA*4X60*21A*	1.01	0.97	*9MV*1002120A**
EHD4X48A**	1.00	0.96	*9MV*1002120A**
EHD4X60A**	1.01	0.95	*9MV*1002120A**
EN(A,D,W)4X48*21**	0.99	0.95	*9MV*1002120A**
ENH4X48*21**	0.99	0.95	*9MV*1002120A**
EA*4X48*24A*	0.99	0.96	*9MV*1202422A**
EA*4X60*24A*	1.01	0.97	*9MV*1202422A**
EHD4X48A**	1.00	0.96	*9MV*1202422A**
EHD4X60A**	1.01	0.95	*9MV*1202422A**
EN(A,D)4X48*24**	0.99	0.96	*9MV*1202422A**
EN(A,D,W)4X60*24**	1.01	0.97	*9MV*1202422A**
ENH4X60*24**	1.01	0.97	*9MV*1202422A**
EA*4X48*21A*	0.98	0.95	*9MA*0802120A**
EA*4X60*21A*	1.00	0.96	*9MA*0802120A**
EHD4X48A**	0.99	0.95	*9MA*0802120A**
EHD4X60A**	1.00	0.94	*9MA*0802120A**

COOLING INDOOR MODEL	CAPACITY	POWER	FURNACE MODEL
EN(A,D,W)4X48*21**	0.98	0.94	*9MA*0802120A**
ENH4X48*21**	0.98	0.94	*9MA*0802120A**
EA*4X48*21A*	0.99	0.96	*9MA*1002122A**
EA*4X60*21A*	1.01	0.95	*9MA*1002122A**
EHD4X48A**	1.00	0.96	*9MA*1002122A**
EHD4X60A**	1.01	0.95	*9MA*1002122A**
EN(A,D,W)4X48*21**	0.99	0.95	*9MA*1002122A**
ENH4X48*21**	0.99	0.95	*9MA*1002122A**
EA*4X48*24A*	0.98	0.95	*9MA*1202422A**
EA*4X60*24A*	1.00	0.96	*9MA*1202422A**
EHD4X48A**	0.99	0.95	*9MA*1202422A**
EHD4X60A**	1.00	0.94	*9MA*1202422A**
EN(A,D)4X48*24**	0.98	0.94	*9MA*1202422A**
EN(A,D,W)4X60*24**	1.00	0.94	*9MA*1202422A**
ENH4X60*24**	1.00	0.94	*9MA*1202422A**
EA*4X48*21A*	0.97	0.95	*9MA*0602120A**
EA*4X60*21A*	0.99	0.96	*9MA*0602120A**
EHD4X48A**	0.98	0.96	*9MA*0602120A**
EHD4X60A**	1.00	0.97	*9MA*0602120A**
EN(A,D,W)4X48*21**	0.98	0.96	*9MA*0602120A**
ENH4X48*21**	0.98	0.96	*9MA*0602120A**
EA*4X48*21A*	0.98	0.96	NOMV156E19*
EA*4X60*21A*	1.00	0.96	NOMV156E19*
EHD4X48A**	1.00	0.97	NOMV156E19*
EHD4X60A**	1.01	0.97	NOMV156E19*
EN(A,D,W)4X48*21**	0.99	0.96	NOMV156E19*
ENH4X48*21**	0.99	0.96	NOMV156E19*
EA*4X48*24A*	1.01	0.98	OLV154F20A
EA*4X60*24A*	1.02	0.98	OLV154F20A
EN(A,D)4X48*24**	1.01	0.98	OLV154F20A
EN(A,D,W)4X60*24**	1.02	0.98	OLV154F20A
EA*4X48*24A*	0.99	0.93	OMV154L20A
EA*4X60*24A*	1.02	0.96	OMV154L20A
EHD4X48A**	1.00	0.94	OMV154L20A
EHD4X60A**	1.02	0.94	OMV154L20A
EN(A,D)4X48*24**	1.00	0.94	OMV154L20A
EN(A,D,W)4X60*24**	1.02	0.96	OMV154L20A
ENH4X60*24**	1.02	0.96	OMV154L20A
EA*4X48*21A*	0.99	0.95	MV16**21C*
EA*4X48*24A*	1.00	0.96	MV16**21C*
EA*4X48*24A*	0.99	0.95	MV20**24C*
EA*4X60*21A*	1.01	0.95	MV16**21C*
EA*4X60*24A*	1.01	0.95	MV16**21C*
EA*4X60*24A*	1.01	0.95	MV20**24C*
EHD4X48A**	1.01	0.97	MV16**21C*
EHD4X48A**	1.00	0.94	MV20**24C*

COOLING INDOOR MODEL	CAPACITY	POWER	FURNACE MODEL
EHD4X60A**	1.02	1.00	
EHD4X60A**	1.02	0.96	MV16**21C*
EHD4X60A**	1.01	0.95	MV20**24C*
EN(A,D)4X48*24**	1.00	0.94	MV16**21C*
EN(A,D)4X48*24**	0.99	0.93	MV20**24C*
EN(A,D,W)4X48*21**	1.00	0.94	MV16**21C*
EN(A,D,W)4X60*24**	1.01	0.95	MV16**21C*
EN(A,D,W)4X60*24**	1.01	0.95	MV20**24C*
ENH4X48*21**	1.00	0.94	MV16**21C*
ENH4X60*24**	1.01	0.95	MV16**21C*
ENH4X60*24**	1.01	0.95	MV20**24C*
HEATING			
HEATING INDOOR MODEL	**CAPACITY**	**POWER**	**FURNACE MODEL**
*FEM4P48**A*	1.00	1.00	
FCM4X48****	0.99	0.96	
FCM4X60****	0.99	0.93	
FEM4X48**A*	1.00	0.97	
FEM4X48**B*	1.00	1.00	
FEM4X60**A*	1.01	0.95	
FEM4X60**B*	1.01	0.98	
FS(M,U)4P48**A*	1.01	0.99	
FVM4X48****	1.00	0.97	
FVM4X60****	1.00	0.94	
FXM4X48**A*	1.00	0.96	
FXM4X60**A*	1.01	0.94	
EA*4X48*21A*	0.99	0.99	*8MX*0902116**
EA*4X60*21A*	1.00	0.98	*8MX*0902116**
EHD4X48A**	0.99	0.98	*8MX*0902116**
EHD4X60A**	1.00	0.97	*8MX*0902116**
EN(A,D,W)4X48*21**	0.99	0.98	*8MX*0902116**
ENH4X48*21**	0.99	0.98	*8MX*0902116**
EA*4X48*21A*	0.98	0.97	*8MX*1102120**
EA*4X60*21A*	0.99	0.96	*8MX*1102120**
EHD4X48A**	0.99	0.97	*8MX*1102120**
EHD4X60A**	0.99	0.95	*8MX*1102120**
EN(A,D,W)4X48*21**	0.99	0.97	*8MX*1102120**
ENH4X48*21**	0.99	0.97	*8MX*1102120**
EA*4X48*24A*	0.99	0.98	*8MX*1352420**
EA*4X60*24A*	0.99	0.97	*8MX*1352420**
EHD4X48A**	0.99	0.98	*8MX*1352420**
EHD4X60A**	1.00	0.96	*8MX*1352420**
EN(A,D)4X48*24**	0.99	0.98	*8MX*1352420**
EN(A,D,W)4X60*24**	0.99	0.96	*8MX*1352420**
ENH4X60*24**	0.99	0.96	*8MX*1352420**
EA*4X48*17A*	0.99	0.99	*8MV*0901716**
EHD4X48A**	0.99	0.99	*8MV*0901716**
EHD4X60A**	0.99	0.97	*8MV*0901716**

HEATING INDOOR MODEL	CAPACITY	POWER	FURNACE MODEL
EA*4X48*21A*	0.99	0.99	*8MV*1102120**
EA*4X60*21A*	0.99	0.98	*8MV*1102120**
EHD4X48A**	0.99	0.98	*8MV*1102120**
EHD4X60A**	0.99	0.97	*8MV*1102120**
EN(A,D,W)4X48*21**	0.99	0.99	*8MV*1102120**
ENH4X48*21**	0.99	0.99	*8MV*1102120**
EA*4X48*24A*	0.98	0.97	*8MV*1352422**
EA*4X60*24A*	0.99	0.97	*8MV*1352422**
EHD4X48A**	0.99	0.98	*8MV*1352422**
EHD4X60A**	0.99	0.96	*8MV*1352422**
EN(A,D)4X48*24**	0.98	0.97	*8MV*1352422**
EN(A,D,W)4X60*24**	0.99	0.97	*8MV*1352422**
ENH4X60*24**	0.99	0.97	*8MV*1352422**
EHD4X60A**	1.00	1.00	*9MX*0801716A**
EA*4X48*21A*	0.99	0.99	*9MX*0802120A**
EA*4X60*21A*	1.00	0.98	*9MX*0802120A**
EHD4X48A**	0.99	0.98	*9MX*0802120A**
EHD4X60A**	1.00	0.97	*9MX*0802120A**
EN(A,D,W)4X48*21**	0.99	0.98	*9MX*0802120A**
ENH4X48*21**	0.99	0.98	*9MX*0802120A**
EA*4X48*21A*	0.99	0.99	*9MX*1002120A**
EA*4X60*21A*	0.99	0.97	*9MX*1002120A**
EHD4X48A**	0.99	0.98	*9MX*1002120A**
EHD4X60A**	1.00	0.97	*9MX*1002120A**
EN(A,D,W)4X48*21**	0.99	0.98	*9MX*1002120A**
ENH4X48*21**	0.99	0.98	*9MX*1002120A**
EA*4X48*24A*	0.99	0.98	*9MX*1202422A**
EA*4X60*24A*	1.00	0.98	*9MX*1202422A**
EHD4X48A**	0.99	0.98	*9MX*1202422A**
EHD4X60A**	1.00	0.97	*9MX*1202422A**
EN(A,D)4X48*24**	0.99	0.98	*9MX*1202422A**
EN(A,D,W)4X60*24**	1.00	0.98	*9MX*1202422A**
ENH4X60*24**	1.00	0.98	*9MX*1202422A**
EHD4X60A**	1.00	1.00	*9MV*0801716A**
EA*4X48*21A*	1.00	1.01	*9MV*0802120A**
EA*4X60*21A*	1.00	0.99	*9MV*0802120A**
EHD4X48A**	1.00	0.99	*9MV*0802120A**
EHD4X60A**	0.99	0.97	*9MV*0802120A**
EN(A,D,W)4X48*21**	1.00	1.00	*9MV*0802120A**
ENH4X48*21**	1.00	1.00	*9MV*0802120A**
EA*4X48*21A*	1.00	1.01	*9MV*1002120A**
EA*4X60*21A*	1.00	0.98	*9MV*1002120A**
EHD4X48A**	1.00	0.99	*9MV*1002120A**
EHD4X60A**	1.00	0.97	*9MV*1002120A**
EN(A,D,W)4X48*21**	1.00	0.99	*9MV*1002120A**
ENH4X48*21**	1.00	0.99	*9MV*1002120A**
EA*4X48*24A*	1.00	1.00	*9MV*1202422A**

HEATING INDOOR MODEL	CAPACITY	POWER	FURNACE MODEL
EA*4X60*24A*	1.00	0.98	*9MV*1202422A**
EHD4X48A**	1.00	0.99	*9MV*1202422A**
EHD4X60A**	1.00	0.97	*9MV*1202422A**
EN(A,D)4X48*24**	1.00	0.99	*9MV*1202422A**
EN(A,D,W)4X60*24**	1.00	0.98	*9MV*1202422A**
ENH4X60*24**	0.99	0.97	*9MV*1202422A**
EA*4X48*21A*	0.98	0.99	*9MA*0802120A**
EA*4X60*21A*	0.99	0.98	*9MA*0802120A**
EHD4X48A**	0.98	0.98	*9MA*0802120A**
EHD4X60A**	0.99	0.98	*9MA*0802120A**
EN(A,D,W)4X48*21**	0.98	0.99	*9MA*0802120A**
ENH4X48*21**	0.98	0.99	*9MA*0802120A**
EA*4X48*21A*	0.99	0.99	*9MA*1002122A**
EA*4X60*21A*	0.99	0.97	*9MA*1002122A**
EHD4X48A**	0.99	0.98	*9MA*1002122A**
EHD4X60A**	0.99	0.96	*9MA*1002122A**
EN(A,D,W)4X48*21**	0.99	0.98	*9MA*1002122A**
ENH4X48*21**	0.99	0.98	*9MA*1002122A**
EA*4X48*24A*	0.98	0.99	*9MA*1202422A**
EA*4X60*24A*	0.99	0.98	*9MA*1202422A**
EHD4X48A**	0.99	0.99	*9MA*1202422A**
EHD4X60A**	0.99	0.98	*9MA*1202422A**
EN(A,D)4X48*24**	0.98	0.98	*9MA*1202422A**
EN(A,D,W)4X60*24**	0.98	0.97	*9MA*1202422A**
ENH4X60*24**	0.98	0.97	*9MA*1202422A**
EA*4X48*21A*	0.99	1.02	*9MA*0602120A**
EA*4X60*21A*	0.99	1.00	*9MA*0602120A**
EHD4X48A**	0.99	1.01	*9MA*0602120A**
EHD4X60A**	0.99	0.99	*9MA*0602120A**
EN(A,D,W)4X48*21**	0.98	1.00	*9MA*0602120A**
ENH4X48*21**	0.98	1.00	*9MA*0602120A**
EA*4X48*21A*	0.99	1.00	NOMV156E19*
EA*4X60*21A*	0.99	0.98	NOMV156E19*
EHD4X48A**	0.99	0.99	NOMV156E19*
EHD4X60A**	0.99	0.97	NOMV156E19*
EN(A,D,W)4X48*21**	0.99	0.99	NOMV156E19*
ENH4X48*21**	0.99	0.99	NOMV156E19*
EA*4X48*24A*	1.02	1.00	OLV154F20A
EA*4X60*24A*	1.02	0.98	OLV154F20A
EN(A,D)4X48*24**	1.02	1.00	OLV154F20A
EN(A,D,W)4X60*24**	1.02	0.99	OLV154F20A
EA*4X48*24A*	0.99	0.98	OMV154L20A
EA*4X60*24A*	1.00	0.98	OMV154L20A
EHD4X48A**	1.00	0.98	OMV154L20A
EHD4X60A**	1.00	0.97	OMV154L20A
EN(A,D)4X48*24**	0.99	0.98	OMV154L20A
EN(A,D,W)4X60*24**	0.99	0.97	OMV154L20A

HEATING INDOOR MODEL	CAPACITY	POWER	FURNACE MODEL
EN(A,D)4X48*24**	0.99	0.98	MV20**24C*
EN(A,D,W)4X48*21**	1.00	0.98	MV16**21C*
EN(A,D,W)4X60*24**	1.00	0.97	MV16**21C*
EN(A,D,W)4X60*24**	0.99	0.97	MV20**24C*
ENH4X48*21**	1.00	0.98	MV16**21C*
ENH4X60*24**	1.00	0.97	MV16**21C*
ENH4X60*24**	0.99	0.97	MV20**24C*

HEATING INDOOR MODEL	CAPACITY	POWER	FURNACE MODEL
EA*4X60*24A*	1.00	0.96	MV20**24C*
EHD4X48A**	1.00	0.98	MV16**21C*
EHD4X48A**	1.00	0.98	MV20**24C*
EHD4X60A**	1.01	0.99	
EHD4X60A**	1.00	0.96	MV16**21C*
EHD4X60A**	1.00	0.97	MV20**24C*
EN(A,D)4X48*24**	1.00	0.98	MV16**21C*

HEATING INDOOR MODEL	CAPACITY	POWER	FURNACE MODEL
ENH4X60*24**	0.99	0.97	OMV154L20A
EA*4X48*21A*	1.00	0.99	MV16**21C*
EA*4X48*24A*	1.00	0.98	MV16**21C*
EA*4X48*24A*	0.99	0.98	MV20**24C*
EA*4X60*21A*	1.00	0.97	MV16**21C*
EA*4X60*24A*	1.00	0.97	MV16**21C*

Specifications subject to change without notice.

EXPANDED DATA (5 tons)

Cooling

EVAPORATOR AIR		CONDENSER ENTERING AIR TEMPERATURES deg F (C)																	
		75 (24)			85 (29)			95 (35)			105 (41)			115 (46)			125 (52)		
		Capacity MBtuh		Total System KW	Capacity MBtuh		Total System KW	Capacity MBtuh		Total System KW	Capacity MBtuh		Total System KW	Capacity MBtuh		Total System KW	Capacity MBtuh		Total System KW
CFM	EWB	Total	Sens		Total	Sens		Total	Sens		Total	Sens		Total	Sens		Total	Sens	
N4H360A(G)KF, N4H360GH(L)F Outdoor Section With FS(M,U)4X60**A* Indoor Section																			
1750	57	57.16	57.16	4.38	54.99	54.99	4.83	52.69	52.69	5.33	50.18	50.18	5.91	47.44	47.44	6.57	44.45	44.45	7.32
	62	59.15	52.45	4.41	56.47	51.18	4.85	53.63	49.82	5.35	50.65	48.37	5.92	47.54	47.30	6.57	44.51	44.51	7.32
	63	60.11	42.61	4.42	57.31	41.34	4.86	54.35	40.02	5.36	51.18	38.61	5.92	47.79	37.14	6.57	44.16	35.59	7.32
	67	64.72	44.22	4.47	61.70	42.95	4.92	58.50	41.62	5.42	55.07	40.20	5.98	51.41	38.74	6.63	47.49	37.18	7.36
	72	71.01	35.89	4.55	67.67	34.62	5.00	64.16	33.30	5.50	60.39	31.90	6.07	56.34	30.42	6.71	52.00	28.86	7.44
2000	57	59.49	59.49	4.50	57.16	57.16	4.95	54.68	54.68	5.45	52.00	52.00	6.03	49.06	49.06	6.69	45.86	45.86	7.43
	62	60.51	56.18	4.51	57.75	54.84	4.96	54.89	53.32	5.46	52.07	52.07	6.03	49.12	49.12	6.69	45.91	45.91	7.43
	63	61.25	45.11	4.52	58.34	43.82	4.96	55.23	42.47	5.46	51.97	41.05	6.02	48.46	39.57	6.68	44.70	37.96	7.41
	67	65.90	46.91	4.58	62.75	45.62	5.02	59.40	44.26	5.52	55.83	42.82	6.08	52.07	41.35	6.73	48.02	39.75	7.46
	72	72.25	37.51	4.66	68.77	36.22	5.11	65.08	34.87	5.61	61.18	33.45	6.17	56.96	31.94	6.81	52.49	30.36	7.54
2250	57	61.41	61.41	4.61	58.94	58.94	5.06	56.30	56.30	5.57	53.46	53.46	6.14	50.35	50.35	6.80	46.98	46.98	7.54
	62	61.74	59.59	4.62	58.94	58.94	5.06	56.37	56.37	5.57	53.52	53.52	6.14	50.39	50.39	6.80	47.03	47.03	7.54
	63	62.12	47.48	4.62	59.10	46.18	5.06	55.93	44.82	5.56	52.55	43.38	6.12	48.95	41.84	6.77	45.12	40.18	7.51
	67	66.78	49.46	4.68	63.51	48.15	5.12	60.08	46.79	5.62	56.44	45.35	6.19	52.54	43.80	6.83	48.41	42.16	7.56
	72	73.16	39.03	4.76	69.54	37.71	5.21	65.76	36.35	5.71	61.72	34.91	6.27	57.39	33.38	6.91	52.81	31.78	7.63

Heating

INDOOR AIR		OUTDOOR COIL ENTERING AIR TEMPERATURES deg F (C)																							
		-3 (–19)			7 (–14)			17 (–18)			27 (–3)			37 (3)			47 (8)			57 (14)			67 (19)		
		Capacity MBtuh		Total Sys-tem KW	Capacity MBtuh		Total Sys-tem KW	Capacity MBtuh		Total Sys-tem KW	Capacity MBtuh		Total Sys-tem KW	Capacity MBtuh		Total Sys-tem KW	Capacity MBtuh		Total Sys-tem KW	Capacity MBtuh		Total Sys-tem KW	Capacity MBtuh		Total Sys-tem KW
EDB	CFM	Total	Integ		Total	Integ		Total	Integ		Total	Integ		Total	Integ		Total	Integ		Total	Integ		Total	Integ	
N4H360A(G)KF, N4H360GH(L)F Outdoor Section With FS(M,U)4X60**A* Indoor Section																									
65	1750	24.86	22.87	3.95	31.48	28.93	4.06	38.08	34.72	4.17	45.28	40.21	4.30	52.48	47.76	4.47	58.88	58.88	4.62	66.42	66.42	4.80	73.43	73.43	4.96
	2000	25.43	23.40	4.01	32.04	29.45	4.10	38.76	35.34	4.19	46.95	41.70	4.35	53.15	48.37	4.46	59.73	59.73	4.59	67.34	67.34	4.73	73.99	73.99	4.87
	2250	25.95	23.87	4.08	32.60	29.95	4.16	39.33	35.86	4.23	47.49	42.18	4.37	53.73	48.90	4.46	60.46	60.46	4.59	67.94	67.94	4.70	74.27	74.27	4.82
70	1750	23.67	21.78	4.10	30.33	27.87	4.22	37.00	33.74	4.34	44.01	39.08	4.48	51.73	47.07	4.67	58.00	58.00	4.83	65.43	65.43	5.01	72.49	72.49	5.17
	2000	24.22	22.28	4.16	30.94	28.43	4.27	37.68	34.36	4.36	44.80	39.79	4.49	52.40	47.68	4.65	58.81	58.81	4.79	66.40	66.40	4.93	73.04	73.04	5.08
	2250	24.72	22.74	4.23	31.51	28.95	4.32	38.28	34.90	4.41	45.52	40.43	4.51	52.96	48.19	4.66	59.54	59.54	4.78	67.06	67.06	4.91	73.39	73.39	5.03
75	1750	22.37	20.58	4.27	29.13	26.77	4.39	35.90	32.74	4.52	42.85	38.05	4.66	51.00	46.41	4.89	57.17	57.17	5.05	64.41	64.41	5.23	71.54	71.54	5.39
	2000	22.91	21.08	4.33	29.73	27.32	4.44	36.57	33.34	4.55	43.63	38.75	4.67	51.62	46.97	4.86	57.93	57.93	5.00	65.46	65.46	5.15	72.12	72.12	5.29
	2250	23.41	21.54	4.40	30.29	27.84	4.50	37.15	33.87	4.59	44.29	39.34	4.70	52.19	47.49	4.86	58.63	58.63	4.99	66.17	66.17	5.11	72.48	72.48	5.24

MULTIPLIERS FOR COMBINATION RATINGS

COOLING

COOLING INDOOR MODEL	CAPACITY	POWER	FURNACE MODEL
*FS(M,U)4X60**A*	1.00	1.00	
FCM4X60****	1.02	0.97	
FEM4X60**A*	1.01	0.96	
FEM4X60**B*	0.99	0.97	
FVM4X60****	1.02	0.97	
FXM4X60**A*	1.01	0.95	
EA*4X60*21A*	0.99	0.97	*8MX*1102120**
EHD4X60A**	1.00	0.96	*8MX*1102120**
EA*4X60*24A*	0.99	0.97	*8MX*1352420**
EHD4X60A**	1.00	0.96	*8MX*1352420**
EN(A,D,W)4X60*24**	0.99	0.97	*8MX*1352420**
ENH4X60*24**	0.99	0.97	*8MX*1352420**
EA*4X60*21A*	0.99	0.99	*8MV*1102120**
EHD4X60A**	1.00	0.98	*8MV*1102120**
EA*4X60*24A*	0.99	0.97	*8MV*1352422**
EHD4X60A**	1.00	0.96	*8MV*1352422**
EN(A,D,W)4X60*24**	0.99	0.96	*8MV*1352422**
ENH4X60*24**	0.99	0.96	*8MV*1352422**
EA*4X60*21A*	0.98	0.97	*9MX*0802120A**
EHD4X60A**	0.99	0.97	*9MX*0802120A**
EA*4X60*21A*	0.99	1.00	*9MX*1002120A**
EHD4X60A**	1.00	0.98	*9MX*1002120A**
EA*4X60*24A*	0.99	0.97	*9MX*1202422A**
EHD4X60A**	1.00	0.98	*9MX*1202422A**
EN(A,D,W)4X60*24**	0.99	0.97	*9MX*1202422A**
ENH4X60*24**	0.99	0.97	*9MX*1202422A**
EHD4X60A**	0.99	0.99	*9MV*0802120A**
EA*4X60*21A*	0.99	0.99	*9MV*1002120A**
EHD4X60A**	1.00	0.98	*9MV*1002120A**
EHD4X60A**	1.00	1.00	*9MV*1202422A**
EN(A,D,W)4X60*24**	0.99	1.00	*9MV*1202422A**
ENH4X60*24**	0.99	1.00	*9MV*1202422A**
EHD4X60A**	0.99	0.97	*9MA*0802120A**
EA*4X60*21A*	0.99	0.97	*9MA*1002122A**
EHD4X60A**	1.00	0.98	*9MA*1002122A**
EA*4X60*24A*	0.99	0.97	*9MA*1202422A**
EHD4X60A**	0.99	0.96	*9MA*1202422A**
EN(A,D,W)4X60*24**	0.99	0.97	*9MA*1202422A**
ENH4X60*24**	0.99	0.97	*9MA*1202422A**
EHD4X60A**	0.99	1.00	OMV154L20A
EA*4X60*21A*	0.99	0.99	
EA*4X60*21A*	1.00	0.98	MV16**21C*
EA*4X60*24A*	0.99	0.99	
EA*4X60*24A*	0.99	0.97	MV20**24C*
EHD4X60A**	1.00	1.00	

COOLING INDOOR MODEL	CAPACITY	POWER	FURNACE MODEL
EHD4X60A**	1.01	0.97	MV16**21C*
EHD4X60A**	1.00	0.96	MV20**24C*
EN(A,D,W)4X60*24**	0.99	0.99	
EN(A,D,W)4X60*24**	0.99	0.97	MV20**24C*
ENH4X60*24**	0.99	0.99	
ENH4X60*24**	0.99	0.97	MV20**24C*

HEATING

HEATING INDOOR MODEL	CAPACITY	POWER	FURNACE MODEL
*FS(M,U)4X60**A*	1.00	1.00	
FCM4X60****	1.00	0.96	
FEM4X60**A*	0.99	0.95	
FEM4X60**B*	1.00	1.00	
FVM4X60****	0.98	0.94	
FXM4X60**A*	0.99	0.95	
EA*4X60*21A*	0.99	0.98	*8MX*1102120**
EHD4X60A**	0.98	0.95	*8MX*1102120**
EA*4X60*24A*	0.99	0.99	*8MX*1352420**
EHD4X60A**	1.00	0.98	*8MX*1352420**
EN(A,D,W)4X60*24**	0.99	0.99	*8MX*1352420**
ENH4X60*24**	1.00	0.99	*8MX*1352420**
EA*4X60*21A*	1.00	1.00	*8MV*1102120**
EHD4X60A**	0.99	0.97	*8MV*1102120**
EA*4X60*24A*	0.99	0.98	*8MV*1352422**
EHD4X60A**	0.99	0.96	*8MV*1352422**
EN(A,D,W)4X60*24**	0.99	0.98	*8MV*1352422**
ENH4X60*24**	1.00	0.99	*8MV*1352422**
EA*4X60*21A*	0.99	1.00	*9MX*0802120A**
EHD4X60A**	1.00	0.99	*9MX*0802120A**
EA*4X60*21A*	1.01	1.01	*9MX*1002120A**
EHD4X60A**	0.99	0.97	*9MX*1002120A**
EA*4X60*24A*	1.00	1.00	*9MX*1202422A**
EHD4X60A**	0.99	0.97	*9MX*1202422A**
EN(A,D,W)4X60*24**	0.99	0.99	*9MX*1202422A**
ENH4X60*24**	0.99	0.99	*9MX*1202422A**
EHD4X60A**	0.99	0.98	*9MV*0802120A**
EA*4X60*21A*	0.99	0.99	*9MV*1002120A**
EHD4X60A**	0.99	0.97	*9MV*1002120A**
EHD4X60A**	1.00	0.98	*9MV*1202422A**
EN(A,D,W)4X60*24**	0.99	0.99	*9MV*1202422A**
ENH4X60*24**	0.99	0.99	*9MV*1202422A**
EHD4X60A**	0.99	0.99	*9MA*0802120A**
EA*4X60*21A*	0.99	0.99	*9MA*1002122A**
EHD4X60A**	0.99	0.97	*9MA*1002122A**
EA*4X60*24A*	1.00	1.00	*9MA*1202422A**
EHD4X60A**	0.99	0.97	*9MA*1202422A**

HEATING INDOOR MODEL	CAPACITY	POWER	FURNACE MODEL
EN(A,D,W)4X60*24**	0.99	0.99	*9MA*1202422A**
ENH4X60*24**	0.99	0.99	*9MA*1202422A**
EHD4X60A**	1.00	0.99	OMV154L20A
EA*4X60*21A*	1.00	0.99	
EA*4X60*21A*	0.99	0.97	MV16**21C*
EA*4X60*24A*	1.00	0.99	
EA*4X60*24A*	0.98	0.97	MV20**24C*
EHD4X60A**	0.99	0.97	
EHD4X60A**	0.99	0.95	MV16**21C*
EHD4X60A**	0.99	0.96	MV20**24C*
EN(A,D,W)4X60*24**	1.00	1.00	
EN(A,D,W)4X60*24**	0.98	0.97	MV20**24C*
ENH4X60*24**	1.01	1.01	
ENH4X60*24**	0.98	0.97	MV20**24C*

COOLING & HEATING PERFORMANCE FOR COMBINATION RATINGS Indoor Models

For complete ratings information, use the AHRI website directory search: www.AHRIdirectory.org. New ratings may be listed online before Specification Sheets are updated.

Outdoor Model	Indoor Model *Tested Model	Furnace Model	Factory Installed	Cooling 95°F (35°C) Capacity BTU/hr	SEER Standard	SEER W/ field TDR	EER	Heat 47°F (8.3°C) Capacity BTU/hr	Heat 47°F (8.3°C) COP	Heat 17°F (-8.3°C) BTU/hr	Heat 17°F (-8.3°C) COP	HSPF
N4H318A(G)KF	*FEM4P18**A*		TDR	17,400	13.00		11.00	16,700	3.60	9,400	2.24	7.7
N4H324A(G)KF	*FEM4P24**A*		TDR	23,400	13.00		11.00	22,000	3.48	13,000	2.28	7.7
N4H330A(G)KF N4H330GHF	*FEM4P30**A*		TDR	28,600	13.00		11.00	29,600	3.50	17,700	2.34	7.7
N4H336A(G)KF N4H336GHF N4H336GLF	*FEM4P36**A*		TDR	33,600	13.00		11.00	33,000	3.54	20,200	2.40	7.7
N4H342A(G)KF N4H342GHF	*FEM4P42**A*		TDR	42,000	13.00		11.00	39,500	3.62	24,000	2.44	8.0
N4H348A(G)KF N4H348GHF N4H348GLF	*FEM4P48**A*		TDR	47,000	13.00		11.00	45,000	3.58	28,200	2.50	8.0
N4H360A(G)KFN 4H360GHF N4H360GLF	*FS(M,U)4X60**A*		TDR&TXV	58,500	13.00		10.80	57,000	3.52	37,000	2.50	7.7

* Tested Combo

TESTED AHRI COMBINATION RATINGS*

NOTE: Ratings contained in this document are subject to change at any time.

For AHRI ratings certificates, please refer to the AHRI directory. **www.ahridirectory.org**

Additional ratings and system combinations can be accessed via the Comfortmaker database:
http://www.icpeqp.com/AHRIratings/ratings.aspx?Brand=Comfortmaker

Or scan this QR code:

ACCESSORY USAGE GUIDELINES			
Accessory	**Required for applications in snow belt region**	**Required for Low–Ambient Cooling Applications {Below 55°F (13°C)}**	**Required for Long Line Applications* {Over 80 Ft. (24.4m)}**
Crankcase Heater	Standard (if required)	Yes	Yes
Evaporator Freeze Thermostat	No	Yes	No
Accumulator	Standard	Standard	Standard
Compressor Start Assist Capacitor and Relay	No	Yes**	Yes**
Low-ambient Control	No	Yes***	No
Support Feet	Yes	Recommended	No
Liquid Line Solenoid Valve	No	No	See Long-Line Application Guideline
* For Tubing Set lengths between 80 and 200 ft (24.4 and 61m) horizontal or 20 ft (6.1m)vertical differential, refer to the Application Guideline and Service Manual-Air Conditioners and Heat Pumps using R–410A			

** Single Phase only
*** For heat pump application, isolation relay required (see kit below)

ACCESSORIES		
Part Number	**Description**	**Used On Model Size**
NASA001SC	Start Component – PTC Device	ALL
NASA001FS	Evaporator Freeze Thermostat	ALL
NASA001LS	Liquid Line Solenoid Valve, HP, R–22 or R–410A	ALL
NASA001TD	Time Delay Relay, Indoor Blower	ALL
NASA001AC	Anti–Cycle Timer (5 minute delay)	ALL
NASA005SC	Hard Start Kit (Capacitor & Relay)	ALL
NASA401LA	Low Ambient Pressure Switch	ALL
NASA00101IK	Low Ambient Isolation Relay Kit	ALL
NASA00201SF	Support Feet, 4” (102mm) tall (5 blocks)	18, 24
NASA001SF	Support Feet, 4” (102mm) tall (4 blocks)	30, 36, 42, 48, 60
NASA00106SS	Snow Stand Kit	ALL
NASA00501CH	Crankcase Heater for Scroll Compressor (208/230 V)	42 (factory installed on 48, 60)
NASA00601CH	Crankcase Heater for Scroll Compressor (208/230 V)	18, 24, 30, 36
NASA001SJ	Sound Jacket, Compressor	18, 24, 30, 36, 42, 48
NASA003SJ	Sound Jacket, Compressor	60
EBAC05TXVX	TXV Kit, R–410A – 2005–2009 R–22 TXV Fancoils (air handlers)	18, 24, 30
EBAC06TXVX	TXV Kit, R–410A – 2005–2009 R–22 TXV Fancoils (air handlers)	36, 42
EBAC07TXVX	TXV Kit, R–410A – 2005–2009 R–22 TXV Fancoils (air handlers)	48, 60

Copyright 2014 International Comfort Products
Lewisburg, Tennessee 37091 USA
www.GoComfortmaker.com