HEATING & COOLING PRODUCTS

# N4A4–C

**Performance Series**

## Product Specifications

# COASTAL 14 SEER AIR CONDITIONER

## 14 SEER/11.5–12.5 EER
## R–410A REFRIGERANT

### 1–1/2 THRU 5 TONS SPLIT SYSTEM

### 208 / 230 Volt, 1–phase, 60 Hz

**REFRIGERATION CIRCUIT**

- Scroll compressors on all models
- Filter–drier included for field installation
- Copper tube / aluminum fin coil

**EASY TO INSTALL AND SERVICE**

- Easy Access service valves on all models
- External high and low refrigerant service ports
- Only two screws to access control panel
- Factory charged with R–410A refrigerant

**BUILT TO LAST**

- Baked–on powder coat finish on all sides
- Corrosion protection epoxy phenolic coated aluminum fins
- Coated, weather–resistant cabinet screws
- Coastal coated inlet grille with 3/8 (10mm) grille spacing for extra protection

**WARRANTY***

- 5 year parts limited warranty (including compressor and coil)
  - With timely registration, an additional 5 year parts limited warranty (including compressor and coil)

AHRI CERTIFIED™ www.ahridirectory.org

Use of the AHRI Certified TM Mark indicates a manufacturer's participation in the program. For verification of certification for individual products, go to www.ahridirectory.org .

c UL US LISTED

* For residential applications only. See warranty certificate for complete details and restrictions, including warranty coverage for other applications.

| Model Number | Size (tons) | Nominal Btu/hr | Min. Circuit Ampacity | Max. Fuse or Breaker | Operating Dimensions height x length/width (sq.) inches (mm) | Operating/ Ship Weight lbs. (kg) |
|---|---|---|---|---|---|---|
| N4A418CKA | 1–1/2 | 18,000 | 11.7 | 20 | 28–7/16 x 23–1/8 (722 x 587) | 111/133 (50/60) |
| N4A424CKA | 2 | 24,000 | 14.1 | 25 | 28–7/16 x 31–3/16 (722 x 792) | 136/170 (62/77) |
| N4A430CKA | 2–1/2 | 30,000 | 16.8 | 25 | 24–13/16 x 31–3/16 (630 x 792) | 152/183 (69/83) |
| N4A436CKA | 3 | 36,000 | 17.8 | 30 | 24–13/16 x 31–3/16 (630 x 792) | 155/186 (70/84) |
| N4A442CKA | 3–1/2 | 42,000 | 22.3 | 35 | 28–7/16 x 31–3/16 (722 x 792) | 189/220 (86/100) |
| N4A448CKA | 4 | 48,000 | 24.5 | 40 | 35–3/4 x 31–3/16 (908 x 792) | 199/233 (90/106) |
| N4A460CKA | 5 | 60,000 | 31.7 | 50 | 39–1/8 x 35 (994 x 889) | 248/289 (113/131) |

## OUTDOOR UNIT MODEL NUMBER IDENTIFICATION GUIDE (single phase)

| Digit Position: | 1 | 2 | 3 | 4 | 5, 6 | 7 | 8 | 9 | 10 | 11 | 12 |
|---|---|---|---|---|---|---|---|---|---|---|---|
| Example Part Number: | **N** | **4** | **A** | **4** | **18** | **C** | **K** | **A** | **1** | **0** | **1** |

**BRANDING**
- H = Heil Mainline
- N = Heil Entry

**REFRIGERANT**
- 4 = R–410A

**TYPE**
- A = Air Conditioner
- H = Heat Pump

**NOMINAL EFFICIENCY**
- 4 = 14 SEER

**NOMINAL CAPACITY**
- 18 = 18,000 BTUH = 1–1/2 tons
- 24 = 24,000 BTUH = 2 tons
- 30 = 30,000 BTUH = 2–1/2 tons
- 36 = 36,000 BTUH = 3 tons
- 42 = 42,000 BTUH = 3–1/2 tons
- 48 = 48,000 BTUH = 4 tons
- 60 = 60,000 BTUH = 5 tons

**FEATURES**
- C = Coastal Unit

**VOLTAGE**
- K = 208/230–1–60

Sales Code

Engineering Revision

Extra Digit

Extra Digit

## ACCESSORIES PART NUMBER IDENTIFICATION GUIDE

| Digit Position: | 1 | 2 | 3 | 4 | 5 | 6, 7 | 8, 9 | 10, 11 |
|---|---|---|---|---|---|---|---|---|
| Example Part Number: | **N** | **A** | **S** | **A** | **0** | **0 1** | **01** | **C H** |

**BRANDING**
- N = Non–Branded

**PRODUCT GROUP**
- A = Accessory

**KIT USAGE**
- S = Split System (AC & HP)

**MAJOR SERIES**
- A = Original
- B = 2nd Generation

**REFRIGERANT**
- 0 = Generic or Not Applicable
- 2 = R–22
- 4 = R–410A

Product Identifier Number

Package Quantity

Type of Kit(Example: CH = Crankcase Heater)

# PHYSICAL DATA

| UNIT SIZE SERIES | 18 | 24 | 30 | 36 | 42 | 48 | 60 |
|---|---|---|---|---|---|---|---|
| Operating Weight (lb) | 111 | 136 | 151.5 | 155 | 189 | 199 | 248 |
| Shipping Weight (lb) | 133 | 170 | 183 | 186 | 220 | 233 | 289 |
| Compressor Type | Scroll | | | | | | |
| REFRIGERANT | R−410A | | | | | | |
| Charge (lb) | 4 | 6.30 | 7.07 | 6.77 | 8.07 | 9.92 | 13.20 |
| COND FAN | Propeller Type, Direct Drive | | | | | | |
| Air Discharge | Vertical | | | | | | |
| Air Qty (CFM) | 1792 | 2200 | 2600 | 2600 | 3937 | 3600 | 4209 |
| Motor HP | 1/12 | 1/12 | 1/10 | 1/10 | 1/4 | 1/4 | 1/4 |
| Motor RPM | 1100 | 850 | 1100 | 1100 | 1100 | 1100 | 800 |
| COND COIL | | | | | | | |
| Face Area (Sq ft) | 9.8 | 15.1 | 12.9 | 12.9 | 15.1 | 19.4 | 25.1 |
| Fins per In. | 20 | 20 | 20 | 20 | 20 | 20 | 20 |
| Rows | 1 | 1 | 2 | 2 | 2 | 2 | 2 |
| Circuits | 3 | 4 | 5 | 5 | 6 | 7 | 10 |
| VALVE CONNECT. (In. ID) | | | | | | | |
| Vapor | 3/4” | 3/4” | 3/4” | 7/8” | 7/8” | 7/8” | 7/8” |
| Liquid | 3/8” | | | | | | |
| REFRIGERANT TUBES* (In. OD) | | | | | | | |
| Vapor (0−80 Ft Tube Length) | 3/4” | 3/4” | 3/4” | 7/8” | 7/8” | 7/8” | 1 1/8” |
| Liquid (0−80 Ft Tube Length) | 3/8” | | | | | | |

*Units are rated with 25 ft (7.6 m) of lineset length. See *Vapor Line Sizing and Cooling Capacity Loss* table when using other sizes and lengths of lineset.

**Note**: See unit Installation Instruction for proper installation.

# VAPOR LINE SIZING AND COOLING CAPACITY LOSS

Acceptable vapor line diameters provide adequate oil return to the compressor while avoiding excessive capacity loss. The suction line diameters shown in the chart below are acceptable for AC systems with R−410A refrigerant:

**Vapor Line Sizing and Cooling Capacity Losses − R−410A Refrigerant 1− Stage Air Conditioner Applications**

| Unit Nominal Size (Btuh) | Acceptable Vapor Line Diameters (In. OD) | Cooling Capacity Loss (%) Total Equivalent Line Length (ft) | | | | | | | | | | |
|---|---|---|---|---|---|---|---|---|---|---|---|---|
| | | Standard Application | | | | Long Line Application Requires Accessories | | | | | | |
| | | 25 (7.62) | 50 (15.2) | 80 (24.4) | 80+ (24.4+) | 100 (30.48) | 125 (38.10) | 150 (45.72) | 175 (53.34) | 200 (60.96) | 225 (68.58) | 250 (76.20) |
| 18000 1−Stage R−410A AC | 1/2 | 1 | 2 | 3 | 3 | 4 | 6 | 7 | 8 | 9 | 10 | 12 |
| | 5/8 | 0 | 0 | 1 | 1 | 1 | 1 | 2 | 2 | 3 | 3 | 3 |
| 24000 1−Stage R−410A AC | 5/8 | 0 | 1 | 1 | 1 | 2 | 3 | 3 | 4 | 4 | 5 | 6 |
| | 3/4 | 0 | 0 | 0 | 0 | 0 | 1 | 1 | 1 | 1 | 1 | 2 |
| 30000 1−Stage R−410A AC | 5/8 | 1 | 2 | 3 | 3 | 3 | 4 | 5 | 6 | 7 | 8 | 9 |
| | 3/4 | 0 | 0 | 1 | 1 | 1 | 1 | 2 | 2 | 2 | 3 | 3 |
| | 7/8 | 0 | 0 | 0 | 0 | 0 | 1 | 1 | 1 | 1 | 1 | 1 |
| 36000 1−Stage R−410A AC | 5/8 | 1 | 2 | 4 | 4 | 5 | 6 | 7 | 9 | 10 | 11 | 13 |
| | 3/4 | 0 | 0 | 1 | 1 | 1 | 2 | 2 | 3 | 3 | 4 | 4 |
| | 7/8 | 0 | 0 | 0 | 0 | 0 | 1 | 1 | 1 | 1 | 2 | 2 |
| 42000 1−Stage R−410A AC | 3/4 | 0 | 1 | 2 | 2 | 2 | 3 | 4 | 4 | 5 | 6 | 6 |
| | 7/8 | 0 | 0 | 1 | 1 | 1 | 1 | 2 | 2 | 2 | 3 | 3 |
| 48000 1−Stage R−410A AC | 3/4 | 0 | 1 | 2 | 2 | 3 | 4 | 5 | 5 | 6 | 7 | 8 |
| | 7/8 | 0 | 0 | 1 | 1 | 1 | 2 | 2 | 2 | 3 | 3 | 4 |
| 60000 1−Stage R−410A AC | 3/4 | 1 | 2 | 4 | 4 | 5 | 6 | 7 | 9 | 10 | 11 | 12 |
| | 7/8 | 0 | 1 | 2 | 2 | 2 | 3 | 4 | 4 | 5 | 5 | 6 |
| | 1 1/8 | 0 | 0 | 0 | 0 | 1 | 1 | 1 | 1 | 1 | 1 | 2 |

Standard Length = 80 ft. (24.4 m) or less total equivalent length

Applications in this area are long line. Accessories are required as shown recommended on Long Line Application Guidelines

Applications in this area may have height restrictions that limit allowable total equivalent length, when outdoor unit is below indoor unit See Long Line Application Guidelines

LONG LINE APPLICATION − An application is considered Long Line, when the refrigerant level in the system requires the use of accessories to maintain acceptable refrigerant management for systems reliability. See Accessory Usage Guideline table for required accessories. Defining a system as long line depends on the liquid line diameter, actual length of the tubing, and vertical separation between the indoor and outdoor units. See Long Line Applications Guideline for details.

## ELECTRICAL DATA

| UNIT SIZE | V/PH | OPER VOLTS* | | COMPR | | FAN | MCA | MIN WIRE SIZE† | MIN WIRE SIZE† | MAX LENGTH (FT)‡ | MAX LENGTH (FT)‡ | MAX FUSE** or CKT BRK AMPS |
|---|---|---|---|---|---|---|---|---|---|---|---|---|
| | | MAX | MIN | LRA | RLA | FLA | | 60° C | 75° C | 60° C | 75° C | |
| 18 | 208/230/1 | 253 | 197 | 47.5 | 9 | 0.4 | 11.7 | 14 | 14 | 62 | 59 | 20 |
| 24 | | | | 62.9 | 10.9 | 0.5 | 14.1 | 14 | 14 | 56 | 53 | 25 |
| 30 | | | | 67.8 | 12.8 | 0.75 | 16.8 | 12 | 14 | 74 | 45 | 25 |
| 36 | | | | 78 | 13.6 | 0.75 | 17.8 | 12 | 14 | 70 | 42 | 30 |
| 42 | | | | 109 | 16.7 | 1.4 | 22.3 | 10 | 12 | 90 | 53 | 35 |
| 48 | | | | 124 | 18.5 | 1.4 | 24.5 | 10 | 10 | 82 | 78 | 40 |
| 60 | | | | 144.2 | 24.4 | 1.2 | 31.7 | 8 | 10 | 98 | 60 | 50 |

* Permissible limits of the voltage range at which the unit will operate satisfactorily

** Time−Delay fuse.

† If wire is applied at ambient greater than 30° C (86° F), consult table 310−16 of the NEC (ANSI/NFPA 70). The ampacity of non−metallic−sheathed cable (NM), trade name ROMEX, shall be that of 60° C (140° F) conditions, per the NEC (ANSI/NFPA 70) Article 336−26. If other than uncoated (no−plated), 60 or 75° C (140 or 167° C) insulation, copper wire (solid wire for 10 AWG or smaller, stranded wire for larger than 10 AWG) is used, consult applicable tables of the NEC (ANSI/NFPA 70).

‡ Length shown is as measured 1 way along wire path between unit and service panel for voltage drop not to exceed 2%.

**FLA** − Full Load Amps

**LRA** − Locked Rotor Amps

**MCA −** Minimum Circuit Amps

**RLA** − Rated Load Amps

**NOTE**: Control circuit is 24−V on all units and requires external power source. Copper wire must be used from service disconnect to unit.

All motors/compressors contain internal overload protection.

Complies with 2007 requirements of ASHRAE Standards 90.1

## A−WEIGHTED SOUND POWER (dBA) WITHOUT SOUND SHIELD

| UNIT SIZE | STANDARD RATING (dBA) | TYPICAL OCTAVE BAND SPECTRUM (dBA, without tone adjustment) | | | | | | |
|---|---|---|---|---|---|---|---|---|
| | | 125 | 250 | 500 | 1000 | 2000 | 4000 | 8000 |
| 18 | 76 | 50.3 | 58.1 | 63.6 | 73.5 | 69.3 | 65.1 | 54.0 |
| 24 | 73 | 53.2 | 61.6 | 65.2 | 69.8 | 65.0 | 61.4 | 53.8 |
| 30 | 76 | 57.0 | 64.5 | 70.3 | 72.5 | 68.4 | 64.1 | 57.8 |
| 36 | 77 | 53.8 | 64.4 | 69.9 | 73.5 | 69.5 | 66.2 | 59.7 |
| 42 | 76 | 58.7 | 68.0 | 69.7 | 70.1 | 67.6 | 64.5 | 57.1 |
| 48 | 75 | 53 | 67 | 62 | 69 | 62 | 58 | 50 |
| 60 | 73 | 52 | 57 | 61 | 66 | 59 | 57 | 51 |

**NOTE**: Tested in accordance with AHRI Standard 270−08 (not listed in AHRI).

## A−WEIGHTED SOUND POWER WITH SOUND HOOD

| UNIT SIZE | STANDARD RATING (dBA) | TYPICAL OCTAVE BAND SPECTRUM (dBA, without tone adjustment) | | | | | | |
|---|---|---|---|---|---|---|---|---|
| | | 125 | 250 | 500 | 1000 | 2000 | 4000 | 8000 |
| 18 | 72 | 51.0 | 57.7 | 63.1 | 69.7 | 64.7 | 59.5 | 53.2 |
| 24 | 72 | 54.4 | 62.0 | 65.0 | 67.7 | 64.1 | 60.8 | 53.1 |
| 30 | 76 | 56.2 | 64.7 | 69.9 | 71.7 | 68.2 | 63.8 | 57.1 |
| 36 | 76 | 53.7 | 64.5 | 69.5 | 72.3 | 68.5 | 65.2 | 59.3 |
| 42 | 75 | 58.9 | 67.0 | 69.4 | 69.7 | 66.7 | 61.9 | 53.5 |
| 48 | 74 | 52 | 66 | 62 | 68 | 62 | 56 | 48 |
| 60 | 72 | 51 | 57 | 60 | 65 | 59 | 55 | 48 |

**NOTE**: Tested in accordance with AHRI Standard 270−08 (not listed in AHRI).

## CHARGING SUBCOOLING (TXV−TYPE EXPANSION DEVICE)

| UNIT SIZE−SERIES | REQUIRED SUBCOOLING °F (°C) |
|---|---|
| 18 | 11 (6.1) |
| 24 | 11 (6.1) |
| 30 | 8 (4.4) |
| 36 | 8 (4.4) |
| 42 | 10 (5.6) |
| 48 | 11 (6.1) |
| 60 | 15 (8.3) |

# DIMENSIONS – ENGLISH

| UNIT | SERIES | ELECTRICAL CHARACTERISTICS | | | | A | B | C | D | E | F | G | K | L | M | N | P | OPERATING WEIGHT (lbs) | SHIPPING WEIGHT (lbs) | SHIPPING DIMENSIONS (L x W x H) |
|---|---|---|---|---|---|---|---|---|---|---|---|---|---|---|---|---|---|---|---|---|
| N4A418CKA | 1 | X | O | O | O | 23 1/8" | 28 7/16" | 3 3/4" | 3/4" | 4 7/16" | 18 1/16" | 7 13/16" | 2 13/16" | 1/2" | 12" | 12 1/2" | 13 3/4" | 111 | 133 | 24 1/8" X 24 1/8" X 30 5/8" |
| N4A424CKA | 1 | X | O | O | O | 31 3/16" | 28 7/16" | 3 3/4" | 3/4" | 6 9/16" | 24 11/16" | 9 1/8" | 2 13/16" | 1/2" | 15" | 16" | 14 1/4" | 136 | 170 | 33 3/8" X 33 3/8" X 30 5/8" |
| N4A430CKA | 1 | X | O | O | O | 31 3/16" | 24 13/16" | 3 3/4" | 3/4" | 6 9/16" | 24 11/16" | 9 1/8" | 2 13/16" | 1/2" | 16" | 16 1/2" | 12 1/4" | 151.5 | 183 | 33 3/8" X 33 3/8" X 27 3/16" |
| N4A436CKA | 1 | X | O | O | O | 31 3/16" | 24 13/16" | 3 7/8" | 7/8" | 6 9/16" | 24 11/16" | 9 1/8" | 2 15/16" | 5/8" | 17" | 15" | 12" | 155 | 186 | 33 3/8" X 33 3/8" X 27 3/16" |
| N4A442CKA | 1 | X | O | O | O | 31 3/16" | 28 7/16" | 3 7/8" | 7/8" | 6 9/16" | 24 11/16" | 9 1/8" | 2 15/16" | 5/8" | 15 3/4" | 17 3/4" | 14 1/2" | 189 | 220 | 33 3/8" X 33 3/8" X 30 5/8" |
| N4A448CKA | 1 | X | O | O | O | 31 3/16" | 35 3/4" | 3 7/8" | 7/8" | 6 9/16" | 24 11/16" | 9 1/8" | 2 15/16" | 5/8" | 16 5/8" | 15 1/4" | 16 1/4" | 199 | 233 | 33 3/8" X 33 3/8" X 40" |
| N4A460CKA | 1 | X | O | O | O | 35" | 39 1/8" | 3 7/8" | 7/8" | 6 9/16" | 28 7/16" | 9 1/8" | 2 15/16" | 5/8" | 16" | 17 3/4" | 19 1/2" | 248 | 289 | 36 1/8" X 36 1/8" X 42 3/4" |
| | | 208-230-1-60 | 230-1-60 | 208/230-3-60 | 460-3-60 | | | | | | | | | | | | | | | |

X = YES
O = NO

| UNIT SIZE | "X" MIN GROUND MOUNTING PAD APPLICATION DIMENSIONS | "Y" MIN ROOF-TOP MOUNTING PAD APPLICATION DIMENSIONS |
|---|---|---|
| 18 | 23 1/8" | 17 3/4" |
| - | 25 3/4" | 20 7/16" |
| 24 THRU 48 | 31 3/16" | 23" |
| 60 | 35" | 26 3/4" |

NOTES:

1. ALLOW 30" CLEARANCE TO SERVICE SIDE OF UNIT, 48" ABOVE UNIT, 6" ON ONE SIDE, 12" ON REMAINING SIDE, AND 24" BETWEEN UNITS FOR PROPER AIRFLOW.
2. MINIMUM OUTDOOR OPERATING AMBIENT IN COOLING MODE IS 55°F, MAX. 125°F.
3. SERIES DESIGNATION IS THE 10TH POSITION OF THE UNIT MODEL NUMBER.
4. CENTER OF GRAVITY ⊕.
5. ALL DIMENSIONS ARE IN "INCHES" UNLESS NOTED.

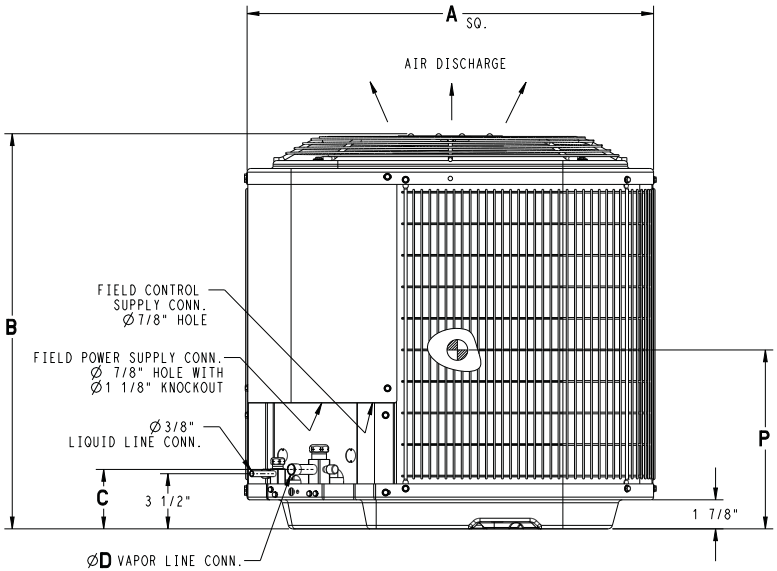


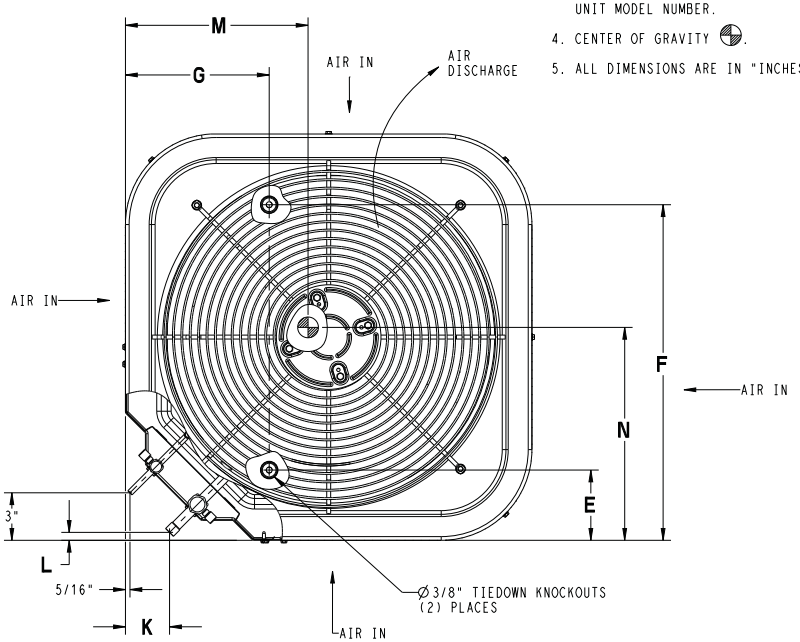


SD5341–4 REV A

# DIMENSIONS – SI

| UNIT | SERIES | ELECTRICAL CHARACTERISTICS | | | | A | B | C | D | E | F | G | K | L | M | N | P | OPERATING WEIGHT (Kgs) | SHIPPING WEIGHT (Kgs) | SHIPPING DIMENSIONS (L x W x H) |
|---|---|---|---|---|---|---|---|---|---|---|---|---|---|---|---|---|---|---|---|---|
| | | 208-230-1-60 | 230-1-60 | 208/230-3-60 | 460-3-60 | | | | | | | | | | | | | | | |
| N4A430CKA | 1 | X | O | O | O | 587.4 | 722.3 | 95.2 | 19.0 | 112.7 | 458.8 | 198.4 | 71.4 | 12.7 | 304.8 | 317.5 | 349.3 | 50.3 | 60.3 | 612.8 X 612.8 X 777.9 |
| N4A424CKA | 1 | X | O | O | O | 792.2 | 722.3 | 95.2 | 19.0 | 166.7 | 627.7 | 231.8 | 71.4 | 12.7 | 381.0 | 406.4 | 362.0 | 61.7 | 77.1 | 846.6 X 846.6 X 777.9 |
| N4A430CKA | 1 | X | O | O | O | 792.2 | 630.2 | 95.2 | 19.0 | 166.7 | 627.7 | 231.8 | 71.4 | 12.7 | 406.4 | 419.1 | 311.2 | 68.7 | 83.0 | 846.6 X 846.6 X 690.6 |
| N4A436CKA | 1 | X | O | O | O | 792.2 | 630.2 | 98.4 | 22.2 | 166.7 | 627.7 | 231.8 | 74.6 | 15.9 | 431.8 | 381.0 | 304.8 | 70.3 | 84.4 | 846.6 X 846.6 X 690.6 |
| N4A442CKA | 1 | X | O | O | O | 792.2 | 722.3 | 98.4 | 22.2 | 166.7 | 627.7 | 231.8 | 74.6 | 15.9 | 400.1 | 438.2 | 368.3 | 85.7 | 99.8 | 846.6 X 846.6 X 777.9 |
| N4A448CKA | 1 | X | O | O | O | 792.2 | 908.0 | 98.4 | 22.2 | 166.7 | 627.7 | 231.8 | 74.6 | 15.9 | 422.3 | 387.4 | 412.8 | 90.3 | 105.7 | 846.6 X 846.6 X 1016.9 |
| N4A460CKA | 1 | X | O | O | O | 889.0 | 993.8 | 98.4 | 22.2 | 166.7 | 722.3 | 231.8 | 74.6 | 15.9 | 406.4 | 450.9 | 495.3 | 112.5 | 131.1 | 917.6 X 917.6 X 1085.8 |

X = YES
O = NO

| UNIT SIZE | "X" MIN GROUND MOUNTING PAD APPLICATION DIMENSIONS | "Y" MIN ROOF-TOP MOUNTING PAD APPLICATION DIMENSIONS |
|---|---|---|
| 18 | 587.3 | 451.3 |
| - | 654.0 | 518.5 |
| 24 THRU 48 | 792.2 | 583.2 |
| 60 | 889.0 | 679.7 |

NOTES:

1. ALLOW 762.0 CLEARANCE TO SERVICE SIDE OF UNIT, 1219.2 ABOVE UNIT, 152.4 ON ONE SIDE, 304.8 ON REMAINING SIDE, AND 609.6 BETWEEN UNITS FOR PROPER AIRFLOW.
2. MINIMUM OUTDOOR OPERATING AMBIENT IN COOLING MODE IS 13°C, MAX. 52°C.
3. SERIES DESIGNATION IS THE 10TH POSITION OF THE UNIT MODEL NUMBER.
4. CENTER OF GRAVITY ⊕.
5. ALL DIMENSIONS ARE IN "MM" UNLESS NOTED.

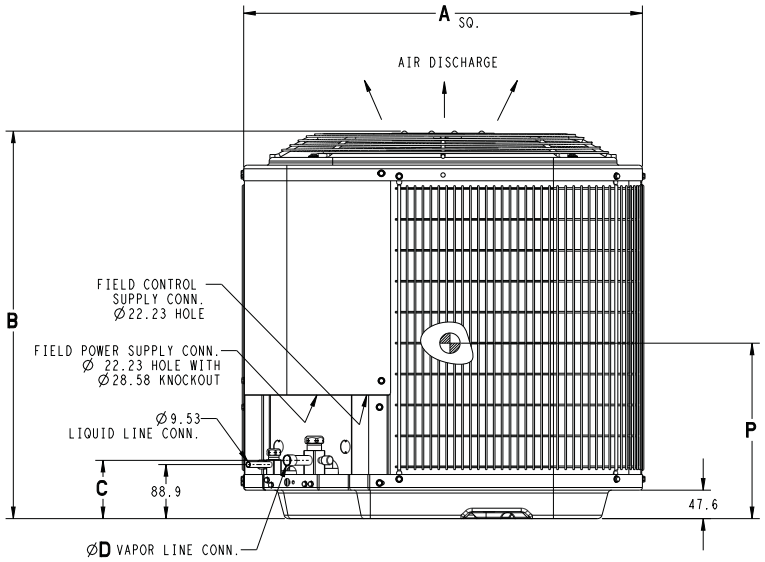


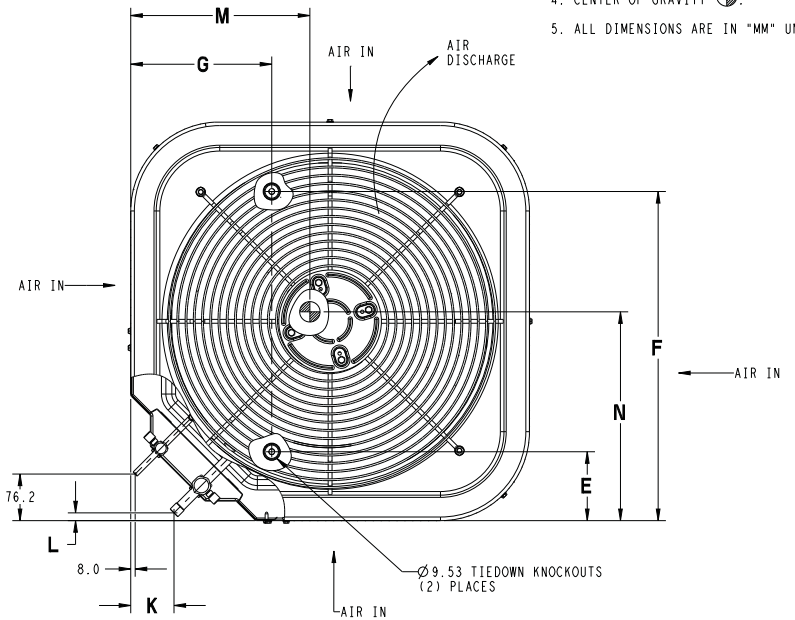


SD5341—4 REV A



Specifications subject to change without notice.

# DETAILED COOLING CAPACITIES#

| EVAPORATOR AIR | | CONDENSER ENTERING AIR TEMPERATURES deg F | | | | | | | | | | | | | | | | | |
|---|---|---|---|---|---|---|---|---|---|---|---|---|---|---|---|---|---|---|---|
| | | 75 | | | 85 | | | 95 | | | 105 | | | 115 | | | 125 | | |
| CFM | EWB | Capacity MBtuh | | Total System KW | Capacity MBtuh | | Total System KW | Capacity MBtuh | | Total System KW | Capacity MBtuh | | Total System KW | Capacity MBtuh | | Total System KW | Capacity MBtuh | | Total System KW |
| | | Total | Sens | | Total | Sens | | Total | Sens | | Total | Sens | | Total | Sens | | Total | Sens | |
| **N4A418CKG Size Outdoor With EA*4X19L17A* Indoor Cooling** | | | | | | | | | | | | | | | | | | | |
| 525 | 57 | 16.93 | 16.93 | 1.22 | 16.34 | 16.34 | 1.36 | 15.71 | 15.71 | 1.52 | 15.01 | 15.01 | 1.70 | 14.22 | 14.22 | 1.90 | 13.32 | 13.32 | 2.14 |
| | 62 | 17.34 | 15.33 | 1.22 | 16.61 | 15.01 | 1.36 | 15.83 | 14.65 | 1.52 | 15.04 | 15.04 | 1.70 | 14.24 | 14.24 | 1.90 | 13.35 | 13.35 | 2.14 |
| | 63 | 17.70 | 12.46 | 1.22 | 16.95 | 12.14 | 1.36 | 16.14 | 11.81 | 1.52 | 15.26 | 11.44 | 1.70 | 14.23 | 11.03 | 1.91 | 13.10 | 10.58 | 2.14 |
| | 67 | 18.99 | 12.91 | 1.21 | 18.22 | 12.62 | 1.35 | 17.40 | 12.30 | 1.51 | 16.49 | 11.95 | 1.69 | 15.45 | 11.57 | 1.90 | 14.25 | 11.12 | 2.14 |
| | 72 | 20.79 | 10.44 | 1.20 | 20.01 | 10.16 | 1.34 | 19.16 | 9.87 | 1.51 | 18.22 | 9.54 | 1.69 | 17.14 | 9.18 | 1.90 | 15.88 | 8.75 | 2.14 |
| 600 | 57 | 17.65 | 17.65 | 1.25 | 17.03 | 17.03 | 1.39 | 16.37 | 16.37 | 1.54 | 15.64 | 15.64 | 1.72 | 14.81 | 14.81 | 1.93 | 13.86 | 13.86 | 2.17 |
| | 62 | 17.72 | 17.63 | 1.25 | 17.06 | 17.06 | 1.39 | 16.40 | 16.40 | 1.54 | 15.67 | 15.67 | 1.72 | 14.83 | 14.83 | 1.93 | 13.88 | 13.88 | 2.17 |
| | 63 | 18.03 | 13.32 | 1.25 | 17.25 | 13.01 | 1.39 | 16.43 | 12.67 | 1.55 | 15.51 | 12.30 | 1.73 | 14.47 | 11.88 | 1.94 | 13.30 | 11.42 | 2.17 |
| | 67 | 19.31 | 13.84 | 1.24 | 18.53 | 13.54 | 1.38 | 17.68 | 13.23 | 1.54 | 16.74 | 12.88 | 1.72 | 15.68 | 12.48 | 1.93 | 14.46 | 12.03 | 2.17 |
| | 72 | 21.14 | 11.01 | 1.23 | 20.33 | 10.74 | 1.37 | 19.46 | 10.44 | 1.54 | 18.49 | 10.12 | 1.72 | 17.38 | 9.75 | 1.93 | 16.08 | 9.32 | 2.17 |
| 675 | 57 | 18.25 | 18.25 | 1.27 | 17.61 | 17.61 | 1.41 | 16.92 | 16.92 | 1.57 | 16.16 | 16.16 | 1.75 | 15.30 | 15.30 | 1.96 | 14.30 | 14.30 | 2.20 |
| | 62 | 18.27 | 18.27 | 1.27 | 17.63 | 17.63 | 1.41 | 16.95 | 16.95 | 1.57 | 16.18 | 16.18 | 1.75 | 15.32 | 15.32 | 1.96 | 14.32 | 14.32 | 2.20 |
| | 63 | 18.27 | 14.16 | 1.27 | 17.48 | 13.84 | 1.42 | 16.63 | 13.50 | 1.57 | 15.71 | 13.13 | 1.76 | 14.64 | 12.71 | 1.96 | 13.46 | 12.22 | 2.20 |
| | 67 | 19.55 | 14.75 | 1.26 | 18.75 | 14.45 | 1.41 | 17.89 | 14.13 | 1.57 | 16.93 | 13.78 | 1.75 | 15.86 | 13.38 | 1.96 | 14.61 | 12.92 | 2.20 |
| | 72 | 21.38 | 11.58 | 1.25 | 20.56 | 11.30 | 1.40 | 19.67 | 11.01 | 1.56 | 18.67 | 10.68 | 1.75 | 17.54 | 10.31 | 1.96 | 16.21 | 9.88 | 2.20 |
| **N4A424CKA Size Outdoor With EAM4X25L17 Indoor Cooling** | | | | | | | | | | | | | | | | | | | |
| 700 | 57 | 22.60 | 22.60 | 1.58 | 21.79 | 21.79 | 1.74 | 20.95 | 20.95 | 1.93 | 20.03 | 20.03 | 2.15 | 19.04 | 19.04 | 2.40 | 17.93 | 17.93 | 2.70 |
| | 62 | 23.23 | 20.43 | 1.58 | 22.21 | 19.98 | 1.74 | 21.14 | 19.51 | 1.93 | 20.06 | 20.06 | 2.15 | 19.07 | 19.07 | 2.40 | 17.96 | 17.96 | 2.70 |
| | 63 | 23.72 | 16.63 | 1.58 | 22.67 | 16.19 | 1.74 | 21.57 | 15.73 | 1.93 | 20.40 | 15.25 | 2.15 | 19.14 | 14.73 | 2.40 | 17.75 | 14.18 | 2.70 |
| | 67 | 25.49 | 17.26 | 1.58 | 24.38 | 16.83 | 1.74 | 23.21 | 16.37 | 1.93 | 21.97 | 15.89 | 2.15 | 20.63 | 15.39 | 2.40 | 19.14 | 14.84 | 2.69 |
| | 72 | 27.98 | 14.00 | 1.57 | 26.78 | 13.57 | 1.74 | 25.51 | 13.13 | 1.93 | 24.16 | 12.66 | 2.15 | 22.70 | 12.17 | 2.40 | 21.11 | 11.63 | 2.69 |
| 800 | 57 | 23.60 | 23.60 | 1.61 | 22.74 | 22.74 | 1.78 | 21.83 | 21.83 | 1.97 | 20.84 | 20.84 | 2.19 | 19.78 | 19.78 | 2.44 | 18.59 | 18.59 | 2.73 |
| | 62 | 23.75 | 22.07 | 1.61 | 22.77 | 22.77 | 1.78 | 21.86 | 21.86 | 1.97 | 20.88 | 20.88 | 2.19 | 19.81 | 19.81 | 2.44 | 18.62 | 18.62 | 2.73 |
| | 63 | 24.18 | 17.77 | 1.61 | 23.09 | 17.33 | 1.78 | 21.94 | 16.86 | 1.97 | 20.73 | 16.37 | 2.19 | 19.42 | 15.85 | 2.44 | 17.99 | 15.28 | 2.74 |
| | 67 | 25.97 | 18.49 | 1.61 | 24.81 | 18.05 | 1.78 | 23.59 | 17.59 | 1.97 | 22.29 | 17.10 | 2.19 | 20.90 | 16.59 | 2.44 | 19.38 | 16.03 | 2.73 |
| | 72 | 28.48 | 14.77 | 1.61 | 27.23 | 14.34 | 1.78 | 25.90 | 13.89 | 1.97 | 24.49 | 13.42 | 2.18 | 22.98 | 12.91 | 2.44 | 21.34 | 12.37 | 2.72 |
| 900 | 57 | 24.44 | 24.44 | 1.65 | 23.52 | 23.52 | 1.82 | 22.55 | 22.55 | 2.01 | 21.51 | 21.51 | 2.22 | 20.39 | 20.39 | 2.48 | 19.13 | 19.13 | 2.77 |
| | 62 | 24.48 | 24.48 | 1.65 | 23.55 | 23.55 | 1.82 | 22.59 | 22.59 | 2.01 | 21.54 | 21.54 | 2.22 | 20.42 | 20.42 | 2.48 | 19.15 | 19.15 | 2.77 |
| | 63 | 24.53 | 18.89 | 1.65 | 23.39 | 18.43 | 1.82 | 22.21 | 17.96 | 2.01 | 20.97 | 17.46 | 2.23 | 19.63 | 16.93 | 2.48 | 18.16 | 16.33 | 2.77 |
| | 67 | 26.32 | 19.69 | 1.65 | 25.12 | 19.24 | 1.82 | 23.86 | 18.77 | 2.01 | 22.53 | 18.28 | 2.22 | 21.11 | 17.76 | 2.48 | 19.55 | 17.18 | 2.77 |
| | 72 | 28.83 | 15.52 | 1.65 | 27.54 | 15.09 | 1.82 | 26.17 | 14.63 | 2.01 | 24.72 | 14.16 | 2.22 | 23.17 | 13.65 | 2.47 | 21.48 | 13.10 | 2.76 |
| **N4A430CKA Size Outdoor With EAM4X37L21 Indoor Cooling** | | | | | | | | | | | | | | | | | | | |
| 875 | 57 | 28.18 | 28.18 | 1.89 | 27.13 | 27.13 | 2.08 | 26.02 | 26.02 | 2.29 | 24.83 | 24.83 | 2.53 | 23.54 | 23.54 | 2.81 | 22.12 | 22.12 | 3.14 |
| | 62 | 28.80 | 26.55 | 1.89 | 27.49 | 25.95 | 2.08 | 26.13 | 26.00 | 2.29 | 24.87 | 24.87 | 2.53 | 23.57 | 23.57 | 2.81 | 22.15 | 22.15 | 3.14 |
| | 63 | 29.39 | 21.55 | 1.89 | 28.03 | 20.96 | 2.08 | 26.60 | 20.35 | 2.29 | 25.10 | 19.71 | 2.53 | 23.49 | 19.04 | 2.81 | 21.75 | 18.32 | 3.14 |
| | 67 | 31.59 | 22.38 | 1.89 | 30.13 | 21.79 | 2.08 | 28.60 | 21.19 | 2.29 | 26.98 | 20.55 | 2.53 | 25.25 | 19.88 | 2.81 | 23.39 | 19.16 | 3.14 |
| | 72 | 34.68 | 18.09 | 1.89 | 33.08 | 17.51 | 2.07 | 31.40 | 16.91 | 2.29 | 29.63 | 16.28 | 2.53 | 27.73 | 15.62 | 2.81 | 25.70 | 14.92 | 3.14 |
| 1000 | 57 | 29.40 | 29.40 | 1.94 | 28.27 | 28.27 | 2.13 | 27.07 | 27.07 | 2.34 | 25.79 | 25.79 | 2.58 | 24.40 | 24.40 | 2.86 | 22.88 | 22.88 | 3.19 |
| | 62 | 29.47 | 29.43 | 1.94 | 28.31 | 28.31 | 2.13 | 27.11 | 27.11 | 2.34 | 25.83 | 25.83 | 2.58 | 24.43 | 24.43 | 2.86 | 22.91 | 22.91 | 3.19 |
| | 63 | 29.93 | 23.04 | 1.94 | 28.52 | 22.44 | 2.13 | 27.03 | 21.82 | 2.34 | 25.46 | 21.16 | 2.58 | 23.80 | 20.48 | 2.86 | 22.00 | 19.74 | 3.19 |
| | 67 | 32.15 | 23.99 | 1.94 | 30.62 | 23.39 | 2.12 | 29.03 | 22.77 | 2.33 | 27.35 | 22.12 | 2.58 | 25.55 | 21.43 | 2.86 | 23.64 | 20.70 | 3.19 |
| | 72 | 35.25 | 19.10 | 1.94 | 33.59 | 18.52 | 2.12 | 31.84 | 17.90 | 2.33 | 29.99 | 17.26 | 2.58 | 28.03 | 16.60 | 2.86 | 25.93 | 15.89 | 3.19 |
| 1125 | 57 | 30.42 | 30.42 | 1.99 | 29.21 | 29.21 | 2.17 | 27.93 | 27.93 | 2.38 | 26.57 | 26.57 | 2.62 | 25.10 | 25.10 | 2.91 | 23.50 | 23.50 | 3.24 |
| | 62 | 30.46 | 30.46 | 1.99 | 29.25 | 29.25 | 2.17 | 27.97 | 27.97 | 2.38 | 26.61 | 26.61 | 2.62 | 25.13 | 25.13 | 2.91 | 23.52 | 23.52 | 3.24 |
| | 63 | 30.34 | 24.49 | 1.99 | 28.87 | 23.88 | 2.17 | 27.34 | 23.24 | 2.38 | 25.73 | 22.58 | 2.63 | 24.02 | 21.87 | 2.91 | 22.20 | 21.08 | 3.24 |
| | 67 | 32.56 | 25.55 | 1.98 | 30.99 | 24.94 | 2.17 | 29.34 | 24.31 | 2.38 | 27.61 | 23.64 | 2.62 | 25.78 | 22.94 | 2.91 | 23.83 | 22.17 | 3.24 |
| | 72 | 35.66 | 20.09 | 1.98 | 33.94 | 19.49 | 2.17 | 32.13 | 18.87 | 2.38 | 30.24 | 18.23 | 2.62 | 28.22 | 17.55 | 2.91 | 26.07 | 16.83 | 3.24 |

Specifications subject to change without notice.

# DETAILED COOLING CAPACITIES# CONTINUED

| EVAPORATOR AIR | | CONDENSER ENTERING AIR TEMPERATURES deg F | | | | | | | | | | | | | | | | | |
|---|---|---|---|---|---|---|---|---|---|---|---|---|---|---|---|---|---|---|---|
| | | 75 | | | 85 | | | 95 | | | 105 | | | 115 | | | 125 | | |
| CFM | EWB °F (°C) | Capacity MBtuh Total | Capacity MBtuh Sens | Total System KW | Capacity MBtuh Total | Capacity MBtuh Sens | Total System KW | Capacity MBtuh Total | Capacity MBtuh Sens | Total System KW | Capacity MBtuh Total | Capacity MBtuh Sens | Total System KW | Capacity MBtuh Total | Capacity MBtuh Sens | Total System KW | Capacity MBtuh Total | Capacity MBtuh Sens | Total System KW |
| N4A436CKA Size Outdoor With EAM4X37L21 Indoor Cooling | | | | | | | | | | | | | | | | | | | |
| 1050 | 57 | 33.25 | 33.25 | 2.27 | 32.03 | 32.03 | 2.52 | 30.75 | 30.75 | 2.78 | 29.33 | 29.33 | 3.07 | 27.70 | 27.70 | 3.43 | 25.82 | 25.82 | 3.86 |
| | 62 | 33.81 | 31.48 | 2.27 | 32.31 | 30.77 | 2.52 | 30.80 | 30.80 | 2.78 | 29.38 | 29.38 | 3.07 | 27.74 | 27.74 | 3.43 | 25.85 | 25.85 | 3.86 |
| | 63 | 34.45 | 25.48 | 2.27 | 32.89 | 24.81 | 2.52 | 31.26 | 24.12 | 2.78 | 29.49 | 23.37 | 3.07 | 27.48 | 22.53 | 3.42 | 25.20 | 21.59 | 3.85 |
| | 67 | 37.03 | 26.49 | 2.28 | 35.36 | 25.82 | 2.53 | 33.60 | 25.12 | 2.80 | 31.67 | 24.37 | 3.10 | 29.52 | 23.53 | 3.45 | 27.07 | 22.60 | 3.88 |
| | 72 | 40.65 | 21.36 | 2.29 | 38.82 | 20.70 | 2.56 | 36.88 | 20.01 | 2.83 | 34.76 | 19.26 | 3.14 | 32.38 | 18.44 | 3.50 | 29.72 | 17.53 | 3.94 |
| 1200 | 57 | 34.65 | 34.65 | 2.33 | 33.34 | 33.34 | 2.58 | 31.96 | 31.96 | 2.85 | 30.43 | 30.43 | 3.14 | 28.67 | 28.67 | 3.50 | 26.66 | 26.66 | 3.94 |
| | 62 | 34.70 | 34.70 | 2.33 | 33.39 | 33.39 | 2.59 | 32.00 | 32.00 | 2.85 | 30.47 | 30.47 | 3.15 | 28.71 | 28.71 | 3.50 | 26.70 | 26.70 | 3.94 |
| | 63 | 35.06 | 27.25 | 2.33 | 33.44 | 26.57 | 2.59 | 31.74 | 25.86 | 2.85 | 29.89 | 25.09 | 3.14 | 27.82 | 24.23 | 3.49 | 25.48 | 23.26 | 3.92 |
| | 67 | 37.65 | 28.39 | 2.34 | 35.91 | 27.70 | 2.60 | 34.08 | 26.99 | 2.86 | 32.08 | 26.22 | 3.16 | 29.85 | 25.37 | 3.52 | 27.35 | 24.41 | 3.95 |
| | 72 | 41.28 | 22.56 | 2.36 | 39.39 | 21.89 | 2.63 | 37.36 | 21.18 | 2.90 | 35.16 | 20.42 | 3.21 | 32.70 | 19.59 | 3.57 | 29.96 | 18.66 | 4.01 |
| 1350 | 57 | 35.82 | 35.82 | 2.39 | 34.43 | 34.43 | 2.65 | 32.95 | 32.95 | 2.92 | 31.32 | 31.32 | 3.22 | 29.46 | 29.46 | 3.57 | 27.34 | 27.34 | 4.01 |
| | 62 | 35.87 | 35.87 | 2.39 | 34.47 | 34.47 | 2.65 | 32.99 | 32.99 | 2.92 | 31.36 | 31.36 | 3.22 | 29.50 | 29.50 | 3.57 | 27.37 | 27.37 | 4.01 |
| | 63 | 35.52 | 28.96 | 2.39 | 33.84 | 28.26 | 2.65 | 32.09 | 27.54 | 2.91 | 30.20 | 26.75 | 3.20 | 28.08 | 25.86 | 3.55 | 25.73 | 25.53 | 3.98 |
| | 67 | 38.11 | 30.23 | 2.40 | 36.32 | 29.54 | 2.66 | 34.43 | 28.81 | 2.93 | 32.38 | 28.02 | 3.23 | 30.10 | 27.14 | 3.58 | 27.57 | 26.11 | 4.02 |
| | 72 | 41.74 | 23.70 | 2.42 | 39.77 | 23.03 | 2.69 | 37.69 | 22.31 | 2.97 | 35.42 | 21.54 | 3.28 | 32.90 | 20.70 | 3.64 | 30.09 | 19.76 | 4.08 |
| N4A442CKA Size Outdoor With EA*4X43L21A* Indoor Cooling | | | | | | | | | | | | | | | | | | | |
| 1250 | 57 | 39.42 | 39.42 | 2.77 | 38.01 | 38.01 | 3.03 | 36.54 | 36.54 | 3.32 | 34.94 | 34.94 | 3.67 | 33.18 | 33.18 | 4.07 | 31.18 | 31.18 | 4.54 |
| | 62 | 40.19 | 36.52 | 2.77 | 38.44 | 35.71 | 3.03 | 36.68 | 36.45 | 3.32 | 35.00 | 35.00 | 3.67 | 33.23 | 33.23 | 4.07 | 31.23 | 31.23 | 4.54 |
| | 63 | 40.88 | 29.60 | 2.77 | 39.07 | 28.82 | 3.03 | 37.20 | 28.03 | 3.32 | 35.20 | 27.20 | 3.67 | 33.02 | 26.30 | 4.07 | 30.60 | 25.31 | 4.54 |
| | 67 | 43.99 | 30.77 | 2.78 | 42.03 | 29.99 | 3.04 | 40.00 | 29.20 | 3.33 | 37.84 | 28.36 | 3.68 | 35.49 | 27.46 | 4.08 | 32.90 | 26.48 | 4.55 |
| | 72 | 48.32 | 24.89 | 2.80 | 46.14 | 24.11 | 3.05 | 43.88 | 23.31 | 3.34 | 41.51 | 22.48 | 3.69 | 38.93 | 21.60 | 4.09 | 36.10 | 20.63 | 4.56 |
| 1400 | 57 | 40.85 | 40.85 | 2.83 | 39.34 | 39.34 | 3.09 | 37.77 | 37.77 | 3.38 | 36.07 | 36.07 | 3.73 | 34.19 | 34.19 | 4.13 | 32.08 | 32.08 | 4.60 |
| | 62 | 41.02 | 40.70 | 2.83 | 39.40 | 39.40 | 3.09 | 37.83 | 37.83 | 3.39 | 36.12 | 36.12 | 3.73 | 34.24 | 34.24 | 4.13 | 32.12 | 32.12 | 4.60 |
| | 63 | 41.52 | 31.30 | 2.83 | 39.63 | 30.50 | 3.09 | 37.69 | 29.70 | 3.38 | 35.64 | 28.85 | 3.73 | 33.38 | 27.93 | 4.13 | 30.91 | 26.92 | 4.60 |
| | 67 | 44.65 | 32.60 | 2.84 | 42.60 | 31.80 | 3.10 | 40.50 | 30.99 | 3.39 | 38.28 | 30.14 | 3.74 | 35.86 | 29.22 | 4.14 | 33.20 | 28.22 | 4.61 |
| | 72 | 48.99 | 26.03 | 2.86 | 46.72 | 25.23 | 3.11 | 44.39 | 24.43 | 3.40 | 41.94 | 23.59 | 3.75 | 39.27 | 22.69 | 4.15 | 36.37 | 21.72 | 4.61 |
| 1575 | 57 | 42.20 | 42.20 | 2.91 | 40.58 | 40.58 | 3.17 | 38.91 | 38.91 | 3.46 | 37.10 | 37.10 | 3.81 | 35.11 | 35.11 | 4.21 | 32.89 | 32.89 | 4.68 |
| | 62 | 42.26 | 42.26 | 2.91 | 40.64 | 40.64 | 3.17 | 38.96 | 38.96 | 3.46 | 37.15 | 37.15 | 3.81 | 35.16 | 35.16 | 4.21 | 32.92 | 32.92 | 4.68 |
| | 63 | 42.05 | 33.19 | 2.91 | 40.11 | 32.38 | 3.17 | 38.11 | 31.56 | 3.46 | 35.98 | 30.69 | 3.81 | 33.69 | 29.74 | 4.21 | 31.17 | 28.66 | 4.68 |
| | 67 | 45.19 | 34.65 | 2.92 | 43.08 | 33.83 | 3.18 | 40.92 | 33.01 | 3.47 | 38.62 | 32.13 | 3.81 | 36.15 | 31.18 | 4.22 | 33.46 | 30.14 | 4.68 |
| | 72 | 49.54 | 27.30 | 2.94 | 47.20 | 26.50 | 3.19 | 44.79 | 25.68 | 3.48 | 42.25 | 24.82 | 3.82 | 39.53 | 23.92 | 4.22 | 36.55 | 22.94 | 4.69 |
| N4A448CKA Size Outdoor With EA*4X60L24A* Indoor Cooling | | | | | | | | | | | | | | | | | | | |
| 1400 | 57 | 44.69 | 44.69 | 3.13 | 43.10 | 43.10 | 3.43 | 41.40 | 41.40 | 3.77 | 39.55 | 39.55 | 4.17 | 37.50 | 37.50 | 4.62 | 35.22 | 35.22 | 5.13 |
| | 62 | 45.72 | 42.76 | 3.14 | 43.76 | 41.81 | 3.43 | 41.71 | 40.78 | 3.78 | 39.60 | 39.60 | 4.17 | 37.55 | 37.55 | 4.62 | 35.27 | 35.27 | 5.13 |
| | 63 | 46.45 | 34.73 | 3.14 | 44.39 | 33.80 | 3.43 | 42.24 | 32.85 | 3.78 | 39.91 | 31.83 | 4.17 | 37.37 | 30.72 | 4.62 | 34.62 | 29.53 | 5.12 |
| | 67 | 50.04 | 36.11 | 3.14 | 47.83 | 35.19 | 3.44 | 45.50 | 34.22 | 3.79 | 42.99 | 33.20 | 4.19 | 40.26 | 32.10 | 4.64 | 37.30 | 30.91 | 5.14 |
| | 72 | 55.01 | 29.34 | 3.15 | 52.60 | 28.43 | 3.46 | 50.04 | 27.47 | 3.81 | 47.28 | 26.45 | 4.21 | 44.28 | 25.36 | 4.67 | 41.02 | 24.19 | 5.17 |
| 1600 | 57 | 46.53 | 46.53 | 3.21 | 44.82 | 44.82 | 3.51 | 42.99 | 42.99 | 3.86 | 41.00 | 41.00 | 4.26 | 38.81 | 38.81 | 4.71 | 36.38 | 36.38 | 5.22 |
| | 62 | 46.81 | 45.90 | 3.21 | 44.86 | 44.86 | 3.51 | 43.05 | 43.05 | 3.86 | 41.06 | 41.06 | 4.26 | 38.86 | 38.86 | 4.71 | 36.42 | 36.42 | 5.22 |
| | 63 | 47.29 | 36.94 | 3.22 | 45.17 | 36.01 | 3.51 | 42.91 | 35.03 | 3.86 | 40.50 | 33.98 | 4.26 | 37.88 | 32.85 | 4.70 | 35.04 | 31.62 | 5.21 |
| | 67 | 50.90 | 38.48 | 3.22 | 48.62 | 37.56 | 3.52 | 46.20 | 36.58 | 3.87 | 43.58 | 35.53 | 4.27 | 40.78 | 34.40 | 4.72 | 37.71 | 33.18 | 5.23 |
| | 72 | 55.94 | 30.83 | 3.23 | 53.43 | 29.90 | 3.54 | 50.75 | 28.92 | 3.89 | 47.88 | 27.88 | 4.29 | 44.79 | 26.77 | 4.75 | 41.40 | 25.58 | 5.25 |
| 1800 | 57 | 48.03 | 48.03 | 3.29 | 46.22 | 46.22 | 3.59 | 44.28 | 44.28 | 3.94 | 42.17 | 42.17 | 4.34 | 39.85 | 39.85 | 4.80 | 37.29 | 37.29 | 5.30 |
| | 62 | 48.09 | 48.09 | 3.29 | 46.28 | 46.28 | 3.59 | 44.34 | 44.34 | 3.94 | 42.22 | 42.22 | 4.34 | 39.90 | 39.90 | 4.80 | 37.33 | 37.33 | 5.30 |
| | 63 | 47.93 | 39.06 | 3.29 | 45.73 | 38.10 | 3.59 | 43.42 | 37.10 | 3.94 | 40.94 | 36.03 | 4.34 | 38.26 | 34.85 | 4.78 | 35.38 | 33.56 | 5.29 |
| | 67 | 51.57 | 40.77 | 3.30 | 49.20 | 39.82 | 3.60 | 46.70 | 38.82 | 3.95 | 44.03 | 37.75 | 4.35 | 41.15 | 36.58 | 4.80 | 38.03 | 35.30 | 5.31 |
| | 72 | 56.62 | 32.23 | 3.31 | 54.02 | 31.29 | 3.61 | 51.26 | 30.29 | 3.97 | 48.31 | 29.24 | 4.37 | 45.11 | 28.12 | 4.83 | 41.65 | 26.91 | 5.33 |

See notes on page 9

# DETAILED COOLING CAPACITIES# CONTINUED

| EVAPORATOR AIR | | CONDENSER ENTERING AIR TEMPERATURES deg F | | | | | | | | | | | | | | | | | |
|---|---|---|---|---|---|---|---|---|---|---|---|---|---|---|---|---|---|---|---|
| | | 75 | | | 85 | | | 95 | | | 105 | | | 115 | | | 125 | | |
| CFM | EWB | Capacity MBtuh | | Total System KW | Capacity MBtuh | | Total System KW | Capacity MBtuh | | Total System KW | Capacity MBtuh | | Total System KW | Capacity MBtuh | | Total System KW | Capacity MBtuh | | Total System KW |
| | | Total | Sens | | Total | Sens | | Total | Sens | | Total | Sens | | Total | Sens | | Total | Sens | |
| N4A460CKA Size Outdoor With EAM4X60L24 Indoor Cooling | | | | | | | | | | | | | | | | | | | |
| 1750 | 57 | 57.13 | 57.13 | 3.82 | 55.13 | 55.13 | 4.20 | 52.98 | 52.98 | 4.64 | 50.62 | 50.62 | 5.15 | 48.02 | 48.02 | 5.72 | 45.10 | 45.10 | 6.36 |
| | 62 | 58.66 | 54.17 | 3.83 | 56.19 | 52.99 | 4.21 | 53.58 | 51.69 | 4.64 | 50.83 | 50.22 | 5.15 | 48.08 | 48.08 | 5.72 | 45.16 | 45.16 | 6.36 |
| | 63 | 59.58 | 44.09 | 3.84 | 57.01 | 42.93 | 4.21 | 54.24 | 41.69 | 4.65 | 51.27 | 40.38 | 5.15 | 48.03 | 38.97 | 5.72 | 44.47 | 37.42 | 6.35 |
| | 67 | 64.25 | 45.85 | 3.86 | 61.48 | 44.68 | 4.24 | 58.50 | 43.44 | 4.68 | 55.28 | 42.12 | 5.19 | 51.78 | 40.71 | 5.76 | 47.95 | 39.17 | 6.39 |
| | 72 | 70.70 | 37.43 | 3.88 | 67.65 | 36.25 | 4.27 | 64.37 | 35.01 | 4.72 | 60.83 | 33.69 | 5.23 | 56.96 | 32.28 | 5.80 | 52.74 | 30.74 | 6.44 |
| 2000 | 57 | 59.42 | 59.42 | 3.93 | 57.27 | 57.27 | 4.31 | 54.97 | 54.97 | 4.75 | 52.44 | 52.44 | 5.26 | 49.65 | 49.65 | 5.83 | 46.55 | 46.55 | 6.47 |
| | 62 | 60.03 | 58.04 | 3.93 | 57.54 | 56.70 | 4.31 | 55.03 | 55.03 | 4.75 | 52.50 | 52.50 | 5.26 | 49.71 | 49.71 | 5.83 | 46.60 | 46.60 | 6.48 |
| | 63 | 60.69 | 46.79 | 3.93 | 57.99 | 45.60 | 4.31 | 55.13 | 44.35 | 4.75 | 52.03 | 43.01 | 5.25 | 48.68 | 41.56 | 5.82 | 45.02 | 39.97 | 6.46 |
| | 67 | 65.42 | 48.75 | 3.95 | 62.50 | 47.56 | 4.34 | 59.40 | 46.30 | 4.78 | 56.07 | 44.96 | 5.29 | 52.44 | 43.51 | 5.86 | 48.50 | 41.93 | 6.50 |
| | 72 | 71.94 | 39.24 | 3.98 | 68.74 | 38.04 | 4.37 | 65.33 | 36.79 | 4.82 | 61.63 | 35.44 | 5.33 | 57.63 | 33.99 | 5.90 | 53.26 | 32.43 | 6.54 |
| 2250 | 57 | 61.31 | 61.31 | 4.03 | 59.03 | 59.03 | 4.41 | 56.59 | 56.59 | 4.85 | 53.92 | 53.92 | 5.36 | 50.97 | 50.97 | 5.94 | 47.70 | 47.70 | 6.58 |
| | 62 | 61.35 | 61.35 | 4.03 | 59.11 | 59.11 | 4.41 | 56.66 | 56.66 | 4.86 | 53.98 | 53.98 | 5.36 | 51.03 | 51.03 | 5.94 | 47.75 | 47.75 | 6.58 |
| | 63 | 61.52 | 49.35 | 4.03 | 58.74 | 48.15 | 4.41 | 55.78 | 46.86 | 4.85 | 52.61 | 45.49 | 5.35 | 49.17 | 43.99 | 5.92 | 45.44 | 42.32 | 6.56 |
| | 67 | 66.26 | 51.51 | 4.05 | 63.27 | 50.31 | 4.43 | 60.08 | 49.03 | 4.88 | 56.65 | 47.65 | 5.39 | 52.93 | 46.16 | 5.96 | 48.91 | 44.47 | 6.59 |
| | 72 | 72.86 | 40.94 | 4.07 | 69.55 | 39.73 | 4.46 | 66.01 | 38.45 | 4.91 | 62.20 | 37.07 | 5.43 | 58.08 | 35.61 | 6.00 | 53.59 | 34.03 | 6.64 |

† Total and sensible capacities are net capacities. Blower motor heat has been subtracted.
‡ Sensible capacities shown are based on 80°F (27°C) entering air at the indoor coil. For sensible capacities at other than 80°F (27°C), deduct 835 Btuh (245 kW) per 1000 CFM (480 L/S) of indoor coil air for each degree below 80°F (27°C), or add 835 Btuh (245 kW) per 1000 CFM (480 L/S) of indoor coil air per degree above 80°F (27°C).
# Detailed cooling capacities are based on indoor and outdoor unit at the same elevation per AHRI standard 210/240–2008. If additional tubing length and/or indoor unit is located above outdoor unit, a slight variation in capacity may occur.
** Sys. kw is total of indoor and outdoor unit kilowatts.
†† At TVA rating indoor condition (75°F edb/63°F ewb). All other indoor air temperatures are at 80°F edb.
**NOTE**: When the required data falls between the published data, interpolation may be performed. Extrapolation is not an acceptable practice.
**EWB** — Entering Wet Bulb



Specifications subject to change without notice.

**TESTED AHRI COMBINATION RATINGS***

NOTE: Ratings contained in this document are subject to change at any time.

For AHRI ratings certificates, please refer to the AHRI directory. **www.ahridirectory.org**

Additional ratings and system combinations can be accessed via the Heil database:
http://www.icpeqp.com/AHRIratings/ratings.aspx?Brand=Heil

Or scan this QR code:

| UNIT SIZE | INDOOR MODEL | AHRI STANDARD RATINGS | | | | | | FURNACE MODEL |
|---|---|---|---|---|---|---|---|---|
| | | COOLING | | | | | | |
| | | CAPACITY | FACTORY ENHANCE | SEER | | | EER | |
| | | | | STANDARD | TDR | TXV | | |
| **18** | EA*4X19L17A* | 17,400 | TXV | | 14.00 | | 11.50 | |
| **24** | EA*4X25L17A* | 23,400 | TXV | | 14.00 | | 12.00 | |
| **30** | EA*4X37L21A* | 28,600 | TXV | | 14.50 | | 12.50 | |
| **36** | EA*4X37L21A* | 33,600 | TXV | | 14.00 | | 12.00 | |
| **42** | EA*4X43L21A* | 40,000 | TXV | | 14.00 | | 12.00 | |
| **48** | EA*4X60L24A* | 45,500 | TXV | | 14.00 | | 12.00 | |
| **60** | EA*4X60L24A* | 57,500 | TXV | | 14.00 | | 11.70 | |

**AHRI** — Air Conditioning, Heating & Refrigeration Institute
**EER** — Energy Efficiency Ratio – 80°F (26.6°C) indoor db/67°F (19.4°C) indoor wb & 95°F (35°C) outdoor wb.
**SEER**— Seasonal Energy Efficiency Ratio
**TDR** —Time−Delay Relay. In most cases, only one method should be used to achieve TDR function. Using more than one method in a system may cause degradation in performance. Use either the accessory Time−Delay Relay or a furnace equipped with TDR. Most ICP furnaces are equipped with TDR.

**NOTES:**
1. Ratings are net values reflecting the effects of circulating fan motor heat. Supplemental electric heat is not included.
2. Tested outdoor/indoor combinations have been tested in accordance with DOE test procedures for central air conditioners. Ratings for other combinations are determined under DOE computer simulation procedures.
3. Determine actual CFM values obtainable for your system by referring to fan performance data in fan coil or furnace coil literature.
4. Do not apply with capillary tube coils as performance and reliability are significantly affected.

## CONDENSER RATING ONLY

| SST deg F | | CONDENSER ENTERING AIR TEMPERATURES deg F | | | | | | | |
|---|---|---|---|---|---|---|---|---|---|
| | | 55 | 65 | 75 | 85 | 95 | 105 | 115 | 125 |
| **N4A418CKA** | | | | | | | | | |
| **30** | TCG | 15.60 | 14.50 | 13.50 | 12.60 | 11.70 | 10.70 | 9.70 | 8.70 |
| | SDT | 69.20 | 78.40 | 87.70 | 97.10 | 106.40 | 115.80 | 125.10 | 134.40 |
| | KW | 0.80 | 0.91 | 1.02 | 1.15 | 1.30 | 1.46 | 1.65 | 1.86 |
| **35** | TCG | 17.20 | 16.00 | 15.00 | 14.00 | 13.00 | 12.00 | 10.90 | 9.70 |
| | SDT | 70.40 | 79.60 | 88.90 | 98.20 | 107.50 | 116.80 | 126.00 | 135.10 |
| | KW | 0.80 | 0.91 | 1.02 | 1.16 | 1.30 | 1.47 | 1.65 | 1.87 |
| **40** | TCG | 18.80 | 17.60 | 16.50 | 15.40 | 14.40 | 13.30 | 12.10 | 10.90 |
| | SDT | 71.70 | 80.80 | 90.10 | 99.30 | 108.50 | 117.70 | 126.90 | 136.00 |
| | KW | 0.79 | 0.90 | 1.02 | 1.16 | 1.30 | 1.47 | 1.66 | 1.87 |
| **45** | TCG | 20.40 | 19.20 | 18.10 | 17.00 | 15.90 | 14.70 | 13.40 | 12.10 |
| | SDT | 73.00 | 82.10 | 91.20 | 100.40 | 109.60 | 118.70 | 127.80 | 136.90 |
| | KW | 0.78 | 0.90 | 1.02 | 1.15 | 1.30 | 1.47 | 1.66 | 1.88 |
| **50** | TCG | 22.20 | 21.00 | 19.80 | 18.60 | 17.40 | 16.10 | 14.80 | 13.40 |
| | SDT | 74.30 | 83.30 | 92.40 | 101.60 | 110.70 | 119.80 | 128.90 | 137.90 |
| | KW | 0.77 | 0.89 | 1.02 | 1.15 | 1.30 | 1.47 | 1.67 | 1.89 |
| **55** | TCG | 24.10 | 22.80 | 21.50 | 20.30 | 19.00 | 17.70 | 16.30 | 14.70 |
| | SDT | 75.60 | 84.60 | 93.70 | 102.80 | 111.90 | 121.00 | 130.00 | 138.90 |
| | KW | 0.76 | 0.88 | 1.01 | 1.15 | 1.30 | 1.48 | 1.67 | 1.89 |
| **N4A424CKA** | | | | | | | | | |
| **30** | TCG | 21.10 | 19.90 | 18.70 | 17.60 | 16.40 | 15.20 | 14.10 | 12.80 |
| | SDT | 69.20 | 78.60 | 87.90 | 97.30 | 106.80 | 116.20 | 125.50 | 134.80 |
| | KW | 1.02 | 1.17 | 1.32 | 1.48 | 1.67 | 1.88 | 2.12 | 2.41 |
| **35** | TCG | 23.20 | 21.90 | 20.60 | 19.40 | 18.10 | 16.90 | 15.50 | 14.20 |
| | SDT | 70.50 | 79.80 | 89.10 | 98.40 | 107.80 | 117.00 | 126.30 | 135.60 |
| | KW | 1.03 | 1.17 | 1.32 | 1.49 | 1.67 | 1.88 | 2.13 | 2.41 |
| **40** | TCG | 25.40 | 24.00 | 22.70 | 21.30 | 20.00 | 18.60 | 17.10 | 15.60 |
| | SDT | 71.80 | 81.10 | 90.30 | 99.60 | 108.80 | 118.00 | 127.20 | 136.40 |
| | KW | 1.03 | 1.17 | 1.32 | 1.49 | 1.67 | 1.88 | 2.13 | 2.41 |
| **45** | TCG | 27.90 | 26.40 | 24.90 | 23.40 | 21.90 | 20.40 | 18.80 | 17.20 |
| | SDT | 73.30 | 82.40 | 91.50 | 100.70 | 109.90 | 119.00 | 128.10 | 137.20 |
| | KW | 1.03 | 1.18 | 1.33 | 1.49 | 1.67 | 1.89 | 2.13 | 2.41 |
| **50** | TCG | 30.40 | 28.80 | 27.30 | 25.70 | 24.00 | 22.40 | 20.60 | 18.80 |
| | SDT | 74.70 | 83.70 | 92.80 | 101.90 | 111.00 | 120.10 | 129.10 | 138.20 |
| | KW | 1.04 | 1.18 | 1.33 | 1.49 | 1.68 | 1.89 | 2.13 | 2.41 |
| **55** | TCG | 33.20 | 31.50 | 29.80 | 28.00 | 26.20 | 24.40 | 22.50 | 20.50 |
| | SDT | 76.20 | 85.20 | 94.20 | 103.20 | 112.20 | 121.20 | 130.20 | 139.20 |
| | KW | 1.04 | 1.18 | 1.33 | 1.49 | 1.68 | 1.89 | 2.13 | 2.41 |

## CONDENSER RATING ONLY (CONT.)

| SST deg F | | CONDENSER ENTERING AIR TEMPERATURES deg F | | | | | | | |
|---|---|---|---|---|---|---|---|---|---|
| | | 55 | 65 | 75 | 85 | 95 | 105 | 115 | 125 |
| **N4A430CKA** | | | | | | | | | |
| 30 | TCG | 24.90 | 23.60 | 22.30 | 20.90 | 19.60 | 18.20 | 16.70 | 15.20 |
| | SDT | 66.80 | 76.20 | 85.70 | 95.20 | 104.60 | 114.10 | 123.50 | 132.80 |
| | KW | 1.27 | 1.45 | 1.63 | 1.83 | 2.05 | 2.30 | 2.59 | 2.92 |
| 35 | TCG | 27.40 | 26.00 | 24.50 | 23.10 | 21.60 | 20.10 | 18.50 | 16.80 |
| | SDT | 68.00 | 77.30 | 86.70 | 96.20 | 105.60 | 114.90 | 124.20 | 133.50 |
| | KW | 1.28 | 1.45 | 1.64 | 1.83 | 2.05 | 2.30 | 2.59 | 2.93 |
| 40 | TCG | 30.10 | 28.60 | 27.00 | 25.40 | 23.80 | 22.10 | 20.40 | 18.60 |
| | SDT | 69.20 | 78.50 | 87.90 | 97.20 | 106.50 | 115.80 | 125.00 | 134.30 |
| | KW | 1.28 | 1.46 | 1.64 | 1.84 | 2.06 | 2.31 | 2.60 | 2.94 |
| 45 | TCG | 33.10 | 31.40 | 29.60 | 27.90 | 26.20 | 24.30 | 22.40 | 20.50 |
| | SDT | 70.60 | 79.80 | 89.10 | 98.30 | 107.50 | 116.70 | 125.90 | 135.10 |
| | KW | 1.29 | 1.47 | 1.65 | 1.84 | 2.06 | 2.31 | 2.60 | 2.95 |
| 50 | TCG | 36.20 | 34.40 | 32.50 | 30.60 | 28.70 | 26.70 | 24.60 | 22.40 |
| | SDT | 72.10 | 81.20 | 90.30 | 99.50 | 108.60 | 117.70 | 126.90 | 135.90 |
| | KW | 1.30 | 1.47 | 1.65 | 1.84 | 2.06 | 2.32 | 2.61 | 2.95 |
| 55 | TCG | 39.60 | 37.60 | 35.50 | 33.50 | 31.40 | 29.20 | 26.90 | 24.60 |
| | SDT | 73.60 | 82.60 | 91.60 | 100.70 | 109.80 | 118.80 | 127.90 | 136.80 |
| | KW | 1.30 | 1.47 | 1.65 | 1.85 | 2.07 | 2.32 | 2.61 | 2.96 |
| **N4A436CKA** | | | | | | | | | |
| 30 | TCG | 36.20 | 34.20 | 32.30 | 30.50 | 28.70 | 26.70 | 24.60 | 22.20 |
| | SDT | 67.10 | 76.40 | 85.90 | 95.30 | 104.70 | 114.10 | 123.50 | 132.70 |
| | KW | 1.80 | 2.03 | 2.27 | 2.54 | 2.84 | 3.18 | 3.57 | 4.03 |
| 35 | TCG | 39.90 | 37.60 | 35.60 | 33.60 | 31.60 | 29.50 | 27.20 | 24.60 |
| | SDT | 68.40 | 77.60 | 86.90 | 96.30 | 105.60 | 114.90 | 124.20 | 133.40 |
| | KW | 1.83 | 2.05 | 2.29 | 2.55 | 2.85 | 3.19 | 3.58 | 4.05 |
| 40 | TCG | 43.80 | 41.40 | 39.10 | 36.90 | 34.70 | 32.40 | 29.90 | 27.10 |
| | SDT | 69.70 | 78.80 | 88.00 | 97.20 | 106.50 | 115.80 | 125.00 | 134.20 |
| | KW | 1.85 | 2.07 | 2.30 | 2.56 | 2.86 | 3.20 | 3.60 | 4.06 |
| 45 | TCG | 48.00 | 45.40 | 42.90 | 40.50 | 38.00 | 35.50 | 32.70 | 29.70 |
| | SDT | 71.00 | 80.00 | 89.10 | 98.30 | 107.50 | 116.70 | 125.90 | 135.00 |
| | KW | 1.87 | 2.08 | 2.31 | 2.57 | 2.87 | 3.21 | 3.61 | 4.07 |
| 50 | TCG | 52.50 | 49.60 | 46.90 | 44.20 | 41.60 | 38.80 | 35.80 | 32.50 |
| | SDT | 72.40 | 81.30 | 90.30 | 99.40 | 108.60 | 117.70 | 126.80 | 135.80 |
| | KW | 1.90 | 2.10 | 2.33 | 2.58 | 2.88 | 3.22 | 3.62 | 4.08 |
| 55 | TCG | 57.30 | 54.10 | 51.10 | 48.20 | 45.30 | 42.20 | 38.90 | 35.40 |
| | SDT | 73.90 | 82.70 | 91.60 | 100.60 | 109.70 | 118.70 | 127.70 | 136.60 |
| | KW | 1.93 | 2.12 | 2.34 | 2.60 | 2.89 | 3.23 | 3.63 | 4.09 |
| **N4A448CKA** | | | | | | | | | |
| 30 | TCG | 41.60 | 39.40 | 37.20 | 35.00 | 32.70 | 30.40 | 27.90 | 25.20 |
| | SDT | 69.10 | 78.30 | 87.60 | 96.90 | 106.30 | 115.60 | 124.80 | 134.00 |
| | KW | 2.16 | 2.36 | 2.59 | 2.88 | 3.21 | 3.59 | 4.02 | 4.51 |
| 35 | TCG | 45.80 | 43.30 | 41.00 | 38.60 | 36.10 | 33.50 | 30.80 | 27.90 |
| | SDT | 70.50 | 79.60 | 88.80 | 98.10 | 107.30 | 116.50 | 125.70 | 134.80 |
| | KW | 2.17 | 2.37 | 2.61 | 2.89 | 3.23 | 3.61 | 4.05 | 4.54 |
| 40 | TCG | 50.20 | 47.60 | 45.00 | 42.40 | 39.80 | 36.90 | 34.00 | 30.70 |
| | SDT | 71.90 | 81.00 | 90.10 | 99.30 | 108.40 | 117.60 | 126.70 | 135.70 |
| | KW | 2.18 | 2.38 | 2.62 | 2.91 | 3.25 | 3.63 | 4.07 | 4.56 |
| 45 | TCG | 55.00 | 52.20 | 49.40 | 46.60 | 43.60 | 40.60 | 37.30 | 33.80 |
| | SDT | 73.50 | 82.50 | 91.50 | 100.60 | 109.60 | 118.70 | 127.70 | 136.60 |
| | KW | 2.18 | 2.38 | 2.63 | 2.92 | 3.26 | 3.65 | 4.09 | 4.59 |
| 50 | TCG | 60.10 | 57.10 | 54.10 | 51.00 | 47.80 | 44.40 | 40.80 | 37.00 |
| | SDT | 75.20 | 84.00 | 93.00 | 102.00 | 110.90 | 119.90 | 128.80 | 137.60 |
| | KW | 2.18 | 2.39 | 2.64 | 2.94 | 3.28 | 3.68 | 4.12 | 4.61 |
| 55 | TCG | 65.70 | 62.40 | 59.10 | 55.70 | 52.20 | 48.50 | 44.50 | 40.40 |
| | SDT | 76.90 | 85.70 | 94.60 | 103.50 | 112.40 | 121.20 | 130.00 | 138.70 |
| | KW | 2.18 | 2.39 | 2.65 | 2.95 | 3.30 | 3.70 | 4.15 | 4.64 |

**CONDENSER RATING ONLY (CONT.)**

| SST deg F | | CONDENSER ENTERING AIR TEMPERATURES deg F | | | | | | | |
|---|---|---|---|---|---|---|---|---|---|
| | | 55 | 65 | 75 | 85 | 95 | 105 | 115 | 125 |
| N4A460CKA | | | | | | | | | |
| 30 | TCG | 54.20 | 51.50 | 48.70 | 45.90 | 43.00 | 39.90 | 36.60 | 33.10 |
| | SDT | 71.00 | 80.30 | 89.60 | 98.90 | 108.20 | 117.50 | 126.60 | 135.70 |
| | KW | 2.72 | 2.99 | 3.31 | 3.69 | 4.13 | 4.63 | 5.21 | 5.86 |
| 35 | TCG | 59.70 | 56.70 | 53.70 | 50.70 | 47.50 | 44.20 | 40.60 | 36.70 |
| | SDT | 72.60 | 81.80 | 91.10 | 100.30 | 109.50 | 118.60 | 127.70 | 136.70 |
| | KW | 2.75 | 3.02 | 3.34 | 3.73 | 4.17 | 4.68 | 5.26 | 5.91 |
| 40 | TCG | 65.60 | 62.30 | 59.10 | 55.80 | 52.30 | 48.60 | 44.80 | 40.60 |
| | SDT | 74.30 | 83.40 | 92.60 | 101.70 | 110.80 | 119.90 | 128.90 | 137.80 |
| | KW | 2.77 | 3.05 | 3.38 | 3.77 | 4.21 | 4.73 | 5.31 | 5.97 |
| 45 | TCG | 71.90 | 68.40 | 64.80 | 61.20 | 57.40 | 53.40 | 49.20 | 44.70 |
| | SDT | 76.20 | 85.20 | 94.20 | 103.20 | 112.20 | 121.20 | 130.10 | 138.90 |
| | KW | 2.79 | 3.08 | 3.41 | 3.80 | 4.26 | 4.78 | 5.36 | 6.02 |
| 50 | TCG | 78.70 | 74.80 | 71.00 | 67.00 | 62.90 | 58.50 | 53.90 | 49.00 |
| | SDT | 78.10 | 87.00 | 95.90 | 104.80 | 113.80 | 122.60 | 131.40 | 140.10 |
| | KW | 2.81 | 3.10 | 3.44 | 3.84 | 4.30 | 4.83 | 5.42 | 6.08 |
| 55 | TCG | 85.90 | 81.70 | 77.50 | 73.20 | 68.60 | 63.90 | 58.90 | 53.50 |
| | SDT | 80.10 | 88.90 | 97.70 | 106.60 | 115.40 | 124.10 | 132.80 | 141.30 |
| | KW | 2.82 | 3.12 | 3.47 | 3.88 | 4.34 | 4.87 | 5.47 | 6.13 |

## ACCESSORY USAGE GUIDELINE

| Accessory | REQUIRED FOR LOW−AMBIENT COOLING APPLICATIONS (Below 55°F / 12.8°C) | REQUIRED FOR LONG LINE APPLICATIONS* | REQUIRED FOR SEA COAST APPLICATIONS (Within 2 miles / 3.22 km) |
|---|---|---|---|
| Compressor Start Assist Capacitor and Relay | Yes | Yes | No |
| Crankcase Heater | Yes | Yes | No |
| Evaporator Freeze Thermostat | Yes | No | No |
| Hard Shutoff TXV | Yes | Yes‡ | No |
| Liquid Line Solenoid Valve | No | See Long−Line Application Guideline | No |
| Low Ambient Switch | Yes | No | No |
| Support Feet | Recommended | No | Recommended |
| Winter Start Control | Yes | No | No |

* For tubing line sets between 80 and 200 ft. (24.38 and 60.96 m) and/or 20 ft. (6.09 m) vertical differential, refer to Residential Split−System Longline Application Guideline.
‡ TXV required beyond 20 ft. (6.1 m) vertical separation or 50 ft. (15.2 m) total length.

## ACCESSORIES

| Part Number | Description | Used On Model Size | | | | | | |
|---|---|---|---|---|---|---|---|---|
| | | 18 | 24 | 30 | 36 | 42 | 48 | 60 |
| NASA001AC | Anti−Cycle Timer (5 minute delay) | X | X | X | X | X | X | X |
| NASA001TD | Time Delay Relay, Indoor Blower | X | X | X | X | X | X | X |
| NASA001CH | Crankcase Heater for Compressor | | | | | X | X | |
| NASA003CH | Crankcase Heater for Compressor | X | X | X | X | | | |
| NASA00201FS | Evaporator Freeze Thermostat | X | X | X | X | X | X | X |
| NASA003SC | Hard Start Kit (Capacitor & Relay) | | | | | X | | |
| NASA005SC | Hard Start Kit (Capacitor & Relay) | X | X | X | X | | X | X |
| NASA001SC | Start Component − PTC Device | | X | X | X | X | X | X |
| NASA401LS | Solenoid Valve Kit | X | X | X | X | X | X | X |
| NASA401LA | Low Ambient Kit (Pressure Switch) | X | X | X | X | X | X | X |
| NASA403PS | Low Pressure Switch Kit | X | X | X | X | X | X | X |
| NASA404PS | High Pressure Switch Kit | X | X | X | X | X | X | X |
| NASA00201WS* | Winter Start Kit | X | X | X | X | X | X | X |
| NASA001SJ | Sound Jacket, Compressor | X | X | X | X | X | X | |
| NASA003SJ | Sound Jacket, Compressor | | | | | | | X |
| NASA001SF | Support Feet | | X | X | X | X | X | X |
| NASA00201SF | Support Feet | X | | | | | | |
| EBAC05TXVX | TXV Kit, R−410A − 2005−2009 R−22 TXV Fancoils (air handlers) | X | X | | | | | |
| EBAC06TXVX | TXV Kit, R−410A − 2005−2009 R−22 TXV Fancoils (air handlers) | | | X | X | X | | |
| EBAC07TXVX | TXV Kit, R−410A − 2005−2009 R−22 TXV Fancoils (air handlers) | | | | | | X | X |

* Use in conjunction with Low Pressure Switch

Copyright 2015 International Comfort Products
Lewisburg, Tennessee 37091 USA
www.GoHeil.com
Specifications subject to change without notice.