G9MVT

Product Specifications

96% AFUE, Communicating, Two–Stage Gas Furnace

EASIER TO SELL

- 96% AFUE, all models, all positions
- All Models have earned the ENERGY STAR®
- Two–stage heating operation
- Observer™ Communicating Control System
- Xtra SEER Variable speed ECM blower motor
- Supports single– and two–stage cooling units
- Dehumidification feature in cooling
- California NOx approved
- Certified to leak 2% or less of nominal air conditioning CFM delivered when pressurized to 1–inch water column with all present air inlets, air outlets, and condensate drain port(s) sealed

TSTAT0101SC Recommended (order separately)

Illustrations and photographs are only representative. Some product models may vary.

TOUGHER

- Flame roll–out sensors standard
- Adjustable heating blower OFF delay
- Factory set blower ON delay
- Stainless steel RPJ® primary heat exchanger
- Stainless steel secondary heat exchanger
- High temperature limit control prevents overheating
- Direct ignition with Silicon Nitride ignitor

QUIETER

- Operates quieter at lower heating rates
- Two–speed induced draft combustion blower
- Variable speed ECM blower motor
- Fully insulated steel cabinet

⚠ WARNING

CARBON MONOXIDE POISONING AND FIRE HAZARD
Failure to follow this warning could result in personal injury, death, and/or property damage.
This furnace is not designed for use in recreation vehicles, manufactured (mobile) homes or outdoors.
Failure to follow this warning could result in personal injury, death, and/or property damage.

EASIER TO INSTALL AND SERVICE

- Direct vent (2–pipe), single–pipe venting or ventilated combustion air
- 24 VAC humidifier terminal
- Electronic air cleaner terminal
- 35” (889mm) high, for ease of installation
- Innovative knobs for easy door removal and secure attachment
- Factory shipped for natural gas, with propane gas conversion kits available
- Four position – upflow/downflow/horizontal (left/right) installation
- At least twelve different venting configurations
- Through the casing flue pipe for counterflow or horizontal applications with accessory (order separately)
- Self–configuring and communicating control
- Concentric vent available
- Slide out heat exchanger assembly and blower assembly

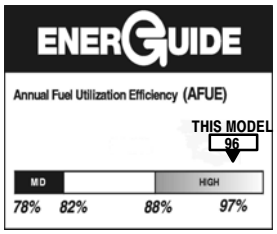

Use of the AHRI Certified TM Mark indicates a manufacturer’s participation in the program. For verification of certification for individual products, go to www.ahridirectory.org .

WARRANTY *

- 10 year No Hassle Replacement™ limited warranty
- Lifetime heat exchanger limited warranty with timely registration
- 5 year parts limited warranty
  - With timely registration, an additional 5 year parts limited warranty

* Applies to original purchaser/homeowner, some limitations may apply. See warranty certificate for complete details.

Model Number	Input (MBTUH)	Efficiency AFUE	Cooling Capacity CFM range @ .5 in. w.c. (125 Pa)	Dimensions H x W x D Inches (Millimeters)	Shipping Wt. Lbs (Kg)
G9MVT0401410A	40,000	96%	440–905	35 x 14–3/16 x 29–1/2 (889 x 361 x 750)	121 (54)
G9MVT0601714A	60,000	96%	435–1475	35 x 17–1/2 x 29–1/2 (889 x 445 x 750)	142 (64)
G9MVT0801716A	80,000	96%	555–1610	35 x 17–1/2 x 29–1/2 (889 x 445 x 750)	152 (68)
G9MVT0802120A	80,000	96%	440–2005	35 x 21 x 29–1/2 (889 x 533 x 750)	156 (71)
G9MVT1002120A	100,000	96%	405–2005	35 x 21 x 29–1/2 (889 x 533 x 750)	166 (75)
G9MVT1202422A	120,000	96%	480–2115	35 x 24–1/2 x 29–1/2 (889 x 622 x 750)	190 (86)

MODEL NUMBER IDENTIFICATION GUIDE

DIGIT POSITION	1	2	3	4	5	6,7,8	9,10	11,12	13	14
	G	**9**	**M**	**V**	**T**	**060**	**17**	**14**	**A**	**1**

G = Mainline
N = Entry

9 = 90+% AFUE — **EFFICIENCY**

M = Multiposition — **POSITION**

A = Modulating ECM Variable Speed Blower
V = ECM Variable Speed
X = ECM Blower
S = Single–stage
T = Two–stage — **TYPE**

C = Communicating
E = Extra AFUE Efficiency
T = Two–Stage — **FEATURE**

040 = 40,000 BTU/hr
060 = 60,000 BTU/hr
080 = 80,000 BTU/hr
100 = 100,000 BTU/hr
120 = 120,000 BTU/hr — **HEAT INPUT**

14 = 14–3/16”
17 = 17–1/2”
21 = 21”
24 = 24–1/2” — **CABINET WIDTH**

08 = 800 CFM
10 = 1000 CFM
12 = 1200 CFM
14 = 1400 CFM
16 = 1600 CFM
20 = 2000 CFM
22 = 2200 CFM — **NOMINAL MAXIMUM COOLING AIRFLOW @ .5 IN. W.C.**

SALES (MAJOR) REVISION DIGIT

ENGINEERING (MINOR) REVISION DIGIT

ECM—Electronically Commutated Motor

ACCESSORIES PART NUMBER IDENTIFICATION GUIDE

DIGIT POSITION	1	2	3	4	5, 6, 7	8, 9	10, 11
	N	**A**	**H**	**A**	**001**	**01**	**DH**

N = Non–Branded — **BRANDING**

A = Accessory — **PRODUCT GROUP**

H = Heating — **KIT USAGE**

A = Original
B = 2nd Generation — **MAJOR SERIES**

Product Identifier Number

Package Quantity

Type of Kit (Example: DH = Draft Hood – Chimney Adapter)

PHYSICAL DATA

UNIT SIZE (NATURAL GAS Ratings)			0401410A	0601714A	0801716A	0802120A	1002120A	1202422A
Input	High Heat	(BTUH)	40,000	60,000	80,000	80,000	100,000	120,000
	Low Heat	(BTUH)	26,000	39,000	52,000	52,000	65,000	78,000
Output	High Heat	(BTUH)	39,000	58,000	78,000	78,000	97,000	117,000
	Low Heat	(BTUH)	25,000	38,000	50,000	51,000	63,000	76,000
Efficiency	AFUE % (ICS)		96.0					
Certified Temperature Rise Range ºF (ºC)		High Heat	40–70 (22–39)	40–70 (22–39)	40–70 (22–39)	40–70 (22–39)	40–70 (22–39)	40–70 (22–39)
		Low Heat	30–60 (17–33)	30–60 (17–33)	30–60 (17–33)	30–60 (17–33)	30–60 (17–33)	30–60 (17–33)

ICS — Isolated Combustion System

AIRFLOW CAPACITY AND BLOWER DATA

UNIT SIZE		0401410A	0601714A	0801716A	0802120A	1002120A	1202422A
Rated External Static Pressure in. w.c.(kPa)	Heating	.10 (.025)	.12 (.030)	.15 (.038)	.15 (.038)	.20 (.050)	.20 (.050)
	Cooling	.5 (.125)					
Airflow Delivery @ Rated ESP (CFM)	High Heating	815	1135	1505	1555	1865	2375
	Low Heating	660	860	1160	1200	1435	1675
	Cooling	905	1475	1610	2005	2005	2115
Cooling Capacity (tons) @ 400, 350 CFM/ton	400 CFM/ton	2	3.5	4	5	5	5
	350 CFM/ton	2.5	4	4.5	5.5	5.5	6
Direct–Drive Motor Type		Electronically Communicated Motor (ECM)					
Direct–Drive Motor HP		1/2	3/4	3/4	1	1	1
Motor Full Load Amps		6.8	8.4	8.4	10.9	10.9	10.9
RPM Range		600–1200					
Speed Selections		PWM – Variable					
Blower Wheel Dia x Width	inches	11 x 7	11 x 8	11 x 8	11 x 10	11 x 10	11 x 11
Air Filtration System		Field Supplied					
Filter Used for Certified Watt Data		NAHA00506FB			NAHA00706FB		

CONTROLS

UNIT SIZE		0401410A	0601714A	0801716A	0802120A	1002120A	1202422A
Gas Connection Size		1/2” – NPT					
Burners (Monoport)		2	3	4	4	5	6
Gas Valve (Redundant)	Manufacturer	White Rogers™					
Minimum Inlet Gas pressure in. w.c. (kPa)		4.5 (1.1)					
Maximum Inlet Gas pressure in. w.c. (kPa)		13.6 (3.4)					
Gas Conversion Kit – Natural to Propane		NAHA01001LP					
Gas Conversion Kit – Propane to Natural		NAHA01001NG					
Ignition Device		Silicon Nitride					
Limit Control		165	180	170	200	180	160
Heating Blower Control (Heating Off–Delay)		Adjustable: 90, 120, 150, 180 seconds					
Cooling Blower Control (Time Delay Relay)		90 seconds					
Communication System		Observer Control System – TSTAT0101SC					
Thermostat Connections		R, W/W1, W2, Y1,Y/Y2, DHUM, G, Com24V					
Accessory Connections		EAC (115vac); HUM (24vac); 1–Stg. AC (via Y/Y2)					

ELECTRICAL DATA

UNIT SIZE		0401410A	0601714A	0801716A	0802120A	1002120A	1202422A
Input Voltage (Volts–Hertz–Phase)		115–60–1					
Operating Voltage Range	Min.–Max.	104 – 127					
Maximum Input Amps	Amps	7.5	9.2	9.2	11.7	11.8	11.8
Unit Ampacity	Amps	10.3	12.4	12.4	15.5	15.6	15.6
Minimum Wire Size	AWG	14	14	14	12	12	12
Maximum Wire Length @ Minimum Wire Size	Feet (M)	36 (11.0)	29 (8.8)	29 (8.8)	37 (11.3)	36(11.0)	36 (11.0)
Maximum Fuse/Circuit Breaker (Time–Delay Type Recommended)	Amps	15	15	15	20	20	20
Transformer Capacity (24 vac Output)		40 VA					
External Control Power Available	Heating	24.3 VA					
	Cooling	34.6 VA					

UNIT DIMENSIONS

NOTES:
1. Doors may vary by model.
2. Minimum return-air openings at furnace, based on metal duct. If flex duct is used, see flex duct manufacturer's recommendations for equivalent diameters.
   a. For 800 CFM-16-in. (406 mm) round or 14 1/2 x 12-in. (368 x 305 mm) rectangle.
   b. For 1200 CFM-20-in. (508 mm) round or 14 1/2 x 19 1/2-in. (368 x 495 mm) rectangle.
   c. For 1600 CFM-22-in. (559 mm) round or 14 1/2 x 22 1/16-in. (368 x 560mm) rectangle.
   d. Return air above 1800 CFM at 0.5 in. w.c. ESP on 24.5" casing, requires one of the following configurations: 2 sides, 1 side and a bottom or bottom only. See Air Delivery table in this document for specific use to allow for sufficient airflow to the furnace.
3. Vent and Combustion air pipes through blower compartment must use accessory "Vent Kit - Through the Cabinet". See accessory list for current part number.

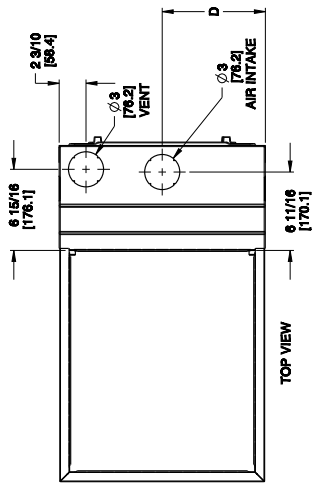

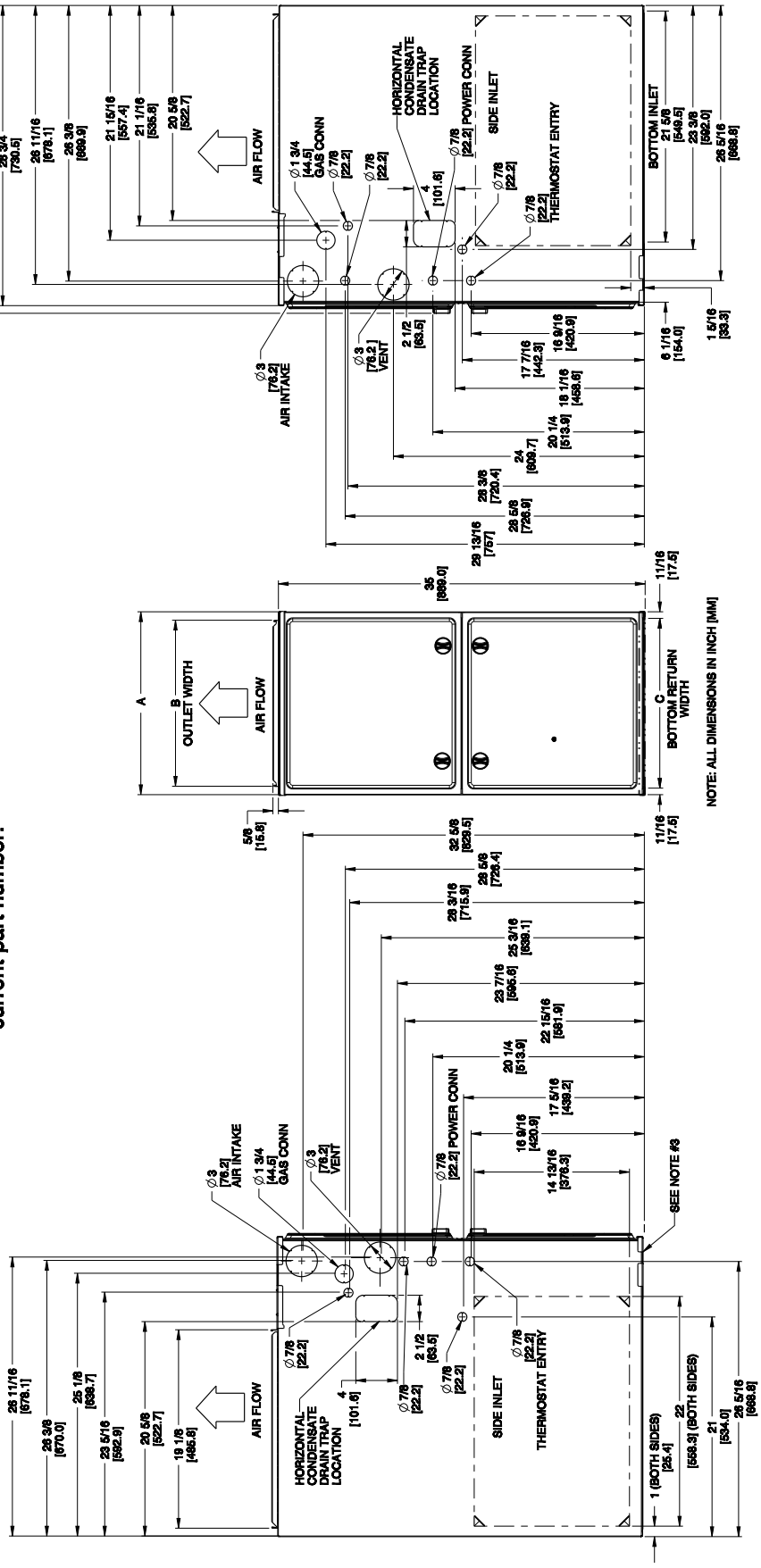

SD5060–4 Rev F

FURNACE SIZE	A CABINET WIDTH	B OUTLET WIDTH	C BOTTOM INLET WIDTH	D AIR INTAKE	SHIP WT. LB (KG)
0401410	14–3/16 (361)	12–1/2 (319)	12–9/16 (322)	7–1/8 (181)	121 (54)
0601714	17–1/2 (445)	15–7/8 (403)	16 (406)	8–3/4 (222)	142 (64)
0801716	17–1/2 (445)	15–7/8 (403)	16 (406)	8–3/4 (222)	152 (68)
0802120	21 (533)	19–3/8 (492)	19–1/2 (495)	10–1/2 (267)	156 (71)
1002120	21 (533)	19–3/8 (492)	19–1/2 (495)	10–1/2 (267)	166 (75)
1202422	24–1/2 (622)	22–7/8 (581)	23 (584)	12–1/4 (311)	190 (86)

MINIMUM CLEARANCES TO COMBUSTIBLE MATERIALS FOR ALL UNITS	
POSITION	CLEARANCE in.(mm)
REAR	0
FRONT (Combustion air openings in furnace and in structure)	1 (25)
Required for service	*24 (610)
All Sides of Supply Plenum	*1 (25)
Sides	0
Vent	0
Top of Furnace	1 (25)

* Consult your local building codes.

AIR DELIVERY – CFM (with filter)													
COOLING[4] AND HEATING AIR DELIVERY - CFM (Bottom Return[5] with filter)													
(SW1-5 and SW4-3 set to OFF, except as indicated. See notes 1 and 2)													
Unit Size	Cooling Switch Settings			External Static Pressure (ESP)									
	SW2-3	SW2-2	SW2-1	0.1	0.2	0.3	0.4	0.5	0.6	0.7	0.8	0.9	1.0
040-10													
Clg Default:	OFF	OFF	OFF	1125	1080	1020	970	905	855	805	755	700	635
Cooling (SW2)	OFF	OFF	ON	615	555	510	475	440	395	355	270	230	note 8
	OFF	ON	OFF	785	740	695	665	630	590	565	520	485	450
	OFF	ON	ON	990	950	910	875	850	815	770	720	670	615
	ON	OFF	OFF	1125	1080	1020	970	905	855	805	755	700	635
	ON	OFF	ON	1125	1080	1020	970	905	855	805	755	700	635
	ON	ON	OFF	1125	1080	1020	970	905	855	805	755	700	635
	ON	ON	ON	1125	1080	1020	970	905	855	805	755	700	635
Clg SW2:	Maximum Clg Airflow [2]			1125	1080	1020	970	905	855	805	755	700	635
Heating (SW1)	High Heat Airflow [3]			815	770	725	695	660	625	595	550	510	475
	Low Heat Airflow [3]			660	605	560	530	495	450	415	340	300	note 7

AIR DELIVERY – CFM (with filter) – continued

COOLING[4] AND HEATING AIR DELIVERY - CFM (Bottom Return[5] with filter)

(SW1-5 and SW4-3 set to OFF, except as indicated. See notes 1 and 2)

Unit Size	Cooling Switch Settings			External Static Pressure (ESP)									
	SW2-3	SW2-2	SW2-1	0.1	0.2	0.3	0.4	0.5	0.6	0.7	0.8	0.9	1.0
060-14													
Clg Default:	OFF	OFF	OFF	1330	1295	1260	1220	1190	1150	1110	1075	1045	1005
Cooling (SW2)	OFF	OFF	ON	725	660	600	520	435	See note 4				
	OFF	ON	OFF	780	725	660	615	540	See note 4				
	OFF	ON	ON	975	925	875	835	785	750	690	655	610	570
	ON	OFF	OFF	1160	1120	1090	1045	1010	970	920	885	840	800
	ON	OFF	ON	1330	1295	1260	1220	1190	1150	1110	1075	1045	1005
	ON	ON	OFF	1705	1650	1595	1545	1475	1415	1340	1275	1200	1105
	ON	ON	ON	1705	1650	1595	1545	1475	1415	1340	1275	1200	1105
Clg SW2:	Maximum Clg Airflow [2]			1705	1650	1595	1545	1475	1415	1340	1275	1200	1105
Heating (SW1)	High Heat Airflow [3]			1145	1105	1075	1030	995	955	905	870	825	785
	Low Heat Airflow [3]			870	820	760	720	655	620	560	525	470	435
080-16													
Clg Default:	OFF	OFF	OFF	1805	1765	1720	1665	1610	1540	1475	1400	1315	1235
Cooling (SW2)	OFF	OFF	ON	775	635	455	230	See note 8					
	OFF	ON	OFF	840	740	675	625	555	See note 4				
	OFF	ON	ON	995	955	910	860	815	770	720	660	620	585
	ON	OFF	OFF	1175	1140	1090	1060	1025	980	940	905	855	815
	ON	OFF	ON	1325	1280	1245	1210	1180	1140	1105	1070	1025	990
	ON	ON	OFF	1545	1515	1480	1445	1410	1380	1350	1315	1245	1175
	ON	ON	ON	1805	1765	1720	1665	1610	1540	1475	1400	1315	1235
Clg SW2:	Maximum Clg Airflow [2]			1805	1765	1720	1665	1610	1540	1475	1400	1315	1235
Heating (SW1)	High Heat Airflow [3]			1520	1490	1455	1420	1385	1355	1320	1285	1220	1155
	Low Heat Airflow [3]			1180	1145	1095	1065	1030	985	945	910	860	820
080-20													
Clg Default:	OFF	OFF	OFF	1905	1870	1825	1785	1750	1700	1665	1625	1560	1460
Cooling (SW2)	OFF	OFF	ON	950	770	620	515	440	365	See note 4			
	OFF	ON	OFF	1015	935	880	825	765	690	625	580	See note 4	
	OFF	ON	ON	1155	1105	1040	990	920	875	815	755	710	645
	ON	OFF	OFF	1335	1290	1245	1190	1145	1085	1040	990	930	890
	ON	OFF	ON	1520	1485	1435	1390	1340	1300	1255	1200	1160	1115
	ON	ON	OFF	1905	1870	1825	1785	1750	1700	1665	1625	1560	1460
	ON	ON	ON	2290	2230	2160	2085	2005	1915	1820	1730	1640	1525
Clg SW2:	Maximum Clg Airflow [2]			2290	2230	2160	2085	2005	1915	1820	1730	1640	1525
Heating (SW1)	High Heat Airflow [3]			1575	1535	1485	1445	1400	1350	1310	1260	1215	1170
	Low Heat Airflow [3]			1230	1170	1125	1065	1015	955	900	855	795	755

AIR DELIVERY – CFM (with filter) – continued

COOLING[4] AND HEATING AIR DELIVERY - CFM (Bottom Return[5] with filter)

Unit Size	Cooling Switch Settings			External Static Pressure (ESP)									
	SW2-3	SW2-2	SW2-1	0.1	0.2	0.3	0.4	0.5	0.6	0.7	0.8	0.9	1.0
100-20													
Clg Default:	OFF	OFF	OFF	1890	1845	1800	1755	1700	1655	1610	1560	1510	1460
Cooling (SW2)	OFF	OFF	ON	1015	825	630	485	405	325	See note 4			
	OFF	ON	OFF	1080	895	815	740	690	615	555	475	See note 4	
	OFF	ON	ON	1155	1080	1020	940	890	825	785	710	660	590
	ON	OFF	OFF	1310	1260	1195	1140	1075	1025	970	925	875	810
	ON	OFF	ON	1520	1475	1425	1365	1315	1255	1210	1155	1110	1055
	ON	ON	OFF	1890	1845	1800	1755	1700	1655	1610	1560	1510	1460
	ON	ON	ON	2290	2230	2160	2085	2005	1915	1820	1730	1640	1525
Clg SW2:	Maximum Clg Airflow [2]			2290	2230	2160	2085	2005	1915	1820	1730	1640	1525
Heating (SW1)	High Heat Airflow [3]			1905	1865	1825	1775	1730	1685	1640	1590	1545	1490
	Low Heat Airflow [3]			1480	1435	1375	1330	1265	1215	1160	1115	1060	1005
120-22													
Clg Default:	OFF	OFF	OFF	2010	1960	1910	1850	1800	1750	1690	1645	1565	1480
Cooling (SW2)	OFF	OFF	ON	1015	805	645	550	480	See note 4				
	OFF	ON	OFF	1075	975	915	835	765	See note 4				
	OFF	ON	ON	1205	1135	1055	1000	935	See note 4				
	ON	OFF	OFF	1400	1330	1260	1190	1145	1080	1035	970	905	845
	ON	OFF	ON	1615	1550	1500	1435	1370	1325	1265	1215	1160	1110
	ON	ON	OFF	2010	1960	1910	1850	1800	1750	1690	1645	1565	1480
	ON	ON	ON	note 8	2375	2300	2205	2115	2010	1890	1750	1645	1550
Clg SW2:	Maximum Clg Airflow [2]			note 8	2375	2300	2205	2115	2010	1890	1750	1645	1550
Heating (SW1)	High Heat Airflow [3]			note 8	2375	2300	2205	2115	2010	1890	1750	1645	1550
	Low Heat Airflow [3]			1735	1675	1625	1560	1500	1455	1395	1345	1285	1225

*See Notes following table.

NOTE:

1. Nominal 350 CFM/ton cooling airflow is delivered with SW1–5 and SW4–3 set to OFF.
   Set both SW1–5 and SW4–3 to ON for +7% airflow (nominal 370 CFM/ton).
   Set SW1–5 to ON and SW4–3 to OFF for +15% airflow (nominal 400 CFM/ton).
   Set SW4–3 to ON and SW1–5 to OFF for –7% airflow (nominal 325 CFM/ton).
   The above adjustments in airflow are subject to motor horsepower range/capacity.
2. Maximum cooling airflow is achieved when switches SW2–1, SW2–2, SW2–3 and SW1–5 are set to ON, and SW4–3 is set to OFF.
3. All heating CFM's are when low heat rise adjustment switch (SW1–3) and comfort/efficiency adjustment switch (SW1–4) are both set to OFF.
4. Ductwork must be sized for high–heating CFM within the operational range of ESP. Operation within the blank areas of the chart is not recommended because high–heat operation will be above 1.0 ESP.
5. All airflows of 1880 CFM or less on 21" and 24.5" casing size furnaces are 5% less on side return only installations.
6. Airflows over 1800 CFM require bottom return, two–side return, or bottom and side return. A minimum filter size of 20" x 25" is required.
7. For upflow applications, air entering from one side into both the side of the furnace and a return air base counts as a side and bottom return.
8. Airflow not stable at this ESP.

ACCESSORIES								
PART NUMBER	COMPONENT NAME	DESCRIPTION	0401410	0601714	0801716	0802120	1002120	1202422
NAHA00101CT	EXTERNAL DRAIN KIT	CONDENSATE TRAP	X	X	X	X	X	X
NAHA00110DA	DRAIN ACCESSORY	1/2" CPVC TO 3/4" PVC (10 PACK)	X	X	X	X	X	X
NAHA002CV	VENT TERMINATION KIT	2" CONCENTRIC VENT	X	X	X	X	X	
NAHA001CV		3" CONCENTRIC VENT		X	X	X	X	X
NAHA00101VC	INTERNAL VENT KIT	THROUGH THE CABINET	X	X	X	X	X	X
NAHA00301VT	DIRECT VENT TERMINATION KIT	2" BRACKET	X	X	X	X	X	
NAHA00401VT		3" BRACKET		X	X	X	X	X
NAHA00101CK	INLET AIR PIPE COUPLING	COUPLING FOR POLYPROPYLENE VENT SYSTEMS	X	X	X	X	X	X
NAHA00101HV	HORIZONTAL INSTALLATION KIT	TRAP GROMMET (DIRECT VENT APPLICATION ONLY)	X	X	X	X	X	X
NAHA00101HH	FREEZE PROTECT KIT	CONDENSATE DRAIN LINE – TAPE	X	X	X	X	X	X
NAHA01101SB	FLOOR BASE KIT	COMBUSTIBLE FLOOR	X	X	X	X	X	X
NAHA01001LP*	GAS CONVERSION KIT	NATURAL TO PROPANE	X	X	X	X	X	X
NAHA01001NG*		PROPANE TO NATURAL	X	X	X	X	X	X
NAHA00506FB†	WASHABLE FILTER PACK	WASHABLE FILTER 1" X 16" X 25" (6 PACK)	X	X	X			
NAHA00706FB		WASHABLE FILTER 1" X 24" X 25" (6 PACK)				X	X	X
NAHB00501FF	EXTERNAL BOTTOM FILTER RACK	14" X 25" WASHABLE FILTER INCLUDED	X					
NAHB00601FF		17–1/2" X 25" WASHABLE FILTER INCLUDED		X	X			
NAHB00701FF		21" X 25" WASHABLE FILTER INCLUDED				X	X	
NAHB00801FF		24–1/2" X 25" WASHABLE FILTER INCLUDED						X
NAHA00901FF	ADJUSTABLE SIDE OR BOTTOM FILTER RACK	1" INCH WASHABLE FILTER INCLUDED	X	X	X	X	X	X
NAHB00101CA	COIL ADAPTER KIT	WITH NO OFFSET	X	X	X	X	X	X
NAHB00201CA		WITH SINGLE OFFSET	X	X	X	X	X	X
NAHB00301CA		WITH DOUBLE OFFSET	X	X	X	X	X	X
NAHA01401RA	RETURN AIR KIT	14–3/16" WIDE	X					
NAHA01701RA		17–1/2" WIDE		X	X			
NAHA02101RA		21" WIDE				X	X	
NAHA02401RA		24–1/2" WIDE						X
TSTAT0101SC	OBSERVER CONTROL SYSTEM	SELF–CONFIGURATING COMMUNICATING CONTROL	X	X	X	X	X	X
NAHA001NK	CONDENSATE NEUTRALIZER KIT	NEUTRALIZES CONDENSATE	X	X	X	X	X	X

X Accessory available
† Suitable for side return filter rack and 17 inch external bottom filter rack.
* Factory authorized and field installed. Gas conversion kits are CSA recognized.

Part Number	Gas Type	Orifice Size
1185612	Natural	42
1176928	Natural	43
1185574	Natural	44
1177213	Natural	45

Part Number	Gas Type	Orifice Size
1183809	Natural	46
1185613	Natural	47
1185614	Natural	48

Part Number	Gas Type	Orifice Size
1184256	Propane	54
1185615	Propane	55
1185616	Propane	56
1185617	Propane	1.25 mm
1185618	Propane	1.30 mm