G80CTL
80% Variable-Speed, Two-Stage Heating Gas Furnace

ICP COMMERCIAL

Product Specifications

SYST0101CW Recommended (sold separately)

A200433

⚠ WARNING

This furnace is not designed for use in mobile homes, trailers, or recreational vehicles. Such use could result in property damage and/or death.

DESIGN CERTIFIED

AHRI CERTIFIED™ www.ahridirectory.org

Use of the AHRI Certified TM Mark indicates a manufacturer's participation in the program. For verification of certification for individual products, go to www.ahridirectory.org .

Certified System ISO 9001 Quality

A200115

EASIER TO SELL

- 80% AFUE
- Cabinet air leakage less than 2.0% at 1.0 in. W.C. and cabinet air leakage less than 1.4% at 0.5 in. W.C. when tested in accordance with ASHRAE standard 193
- Supports two-stage cooling units
- ION™ Communicating Control System
- Flame roll-out sensors standard
- Category I venting
- Blocked vent switch
- Dehumidification feature in cooling
- 24 VAC humidifier terminal
- Electronic air cleaner terminal
- Low NOx units are designed for California installations and meet 40 ng/J NOx emissions. Can be installed in air quality management districts with a 40 ng/J NOx emissions requirement.

TOUGHER

- Variable speed ECM blower motor
- Adjustable heating blower OFF delay
- Factory set blower ON delay
- RPJ aluminized steel heat exchanger
- High temperature limit control prevents overheating
- Direct ignition with Silicon Nitride ignitor
- One piece prepainted steel cabinet

QUIETER

- Two-stage heating operation
- Two-stage induced draft blower
- In-shot burners
- Insulated blower compartment

EASIER TO INSTALL AND SERVICE

- 33-1/3" (847mm) high, for ease of installation
- Innovative knobs for easy door removal and secure attachment
- Factory shipped for natural gas, with propane gas conversion kits available
- Four position - upflow/downflow/horizontal (left/right) installation
- Three position vent elbow capability
- Through the casing flue pipe for counterflow applications
- Common venting with other Category I appliances
- Masonry chimney adapter available
- Self diagnostics
- Slide out blower assembly

LIMITED WARRANTY*

- 10 year No Hassle Replacement™ limited warranty
- Lifetime heat exchanger limited warranty with timely registration
- 5 year parts limited warranty

- With timely registration, an additional 5 year parts limited warranty

* For residential applications only, See warranty certificate for complete details and restrictions, including warranty coverage of other applications.

Model Number	Input (BTUH)	Efficiency AFUE	Cooling Capacity CFM range @ .5 in. w.c. (125 Pa)	Dimensions H x W x D Inches (Millimeters)	Shipping Wt. Lbs (Kg)
G80CTL0451712	44,000	80%	550 - 1345	33-1/3 x 17-1/2 x 29 (847 x 445 x 737)	126 (57)
G80CTL0701412	66,000	80%	485 - 1395	33-1/3 x 14-3/16 x 29 (847 x 360 x 737)	107 (49)
G80CTL0701716	66,000	80%	505 - 1375	33-1/3 x 17-1/2 x 29 (847 x 445 x 737)	126 (57)
G80CTL0702120	66,000	80%	790 - 2150	33-1/3 x 21 x 29 (847 x 533 x 737)	146 (66)
G80CTL0901716	88,000	80%	475 - 1595	33-1/3 x 17-1/2 x 29 (847 x 445 x 737)	126 (57)
G80CTL0902120	88,000	80%	730 - 2330	33-1/3 x 21 x 29 (847 x 533 x 737)	146 (66)
G80CTL1102120	110,000	80%	700 - 2155	33-1/3 x 21 x 29 (847 x 533 x 737)	152 (69)
G80CTL1352422	132,000	80%	690 - 2265	33-1/3 x 24-1/2 x 29 (847 x 622 x 737)	163 (74)

NOMENCLATURE

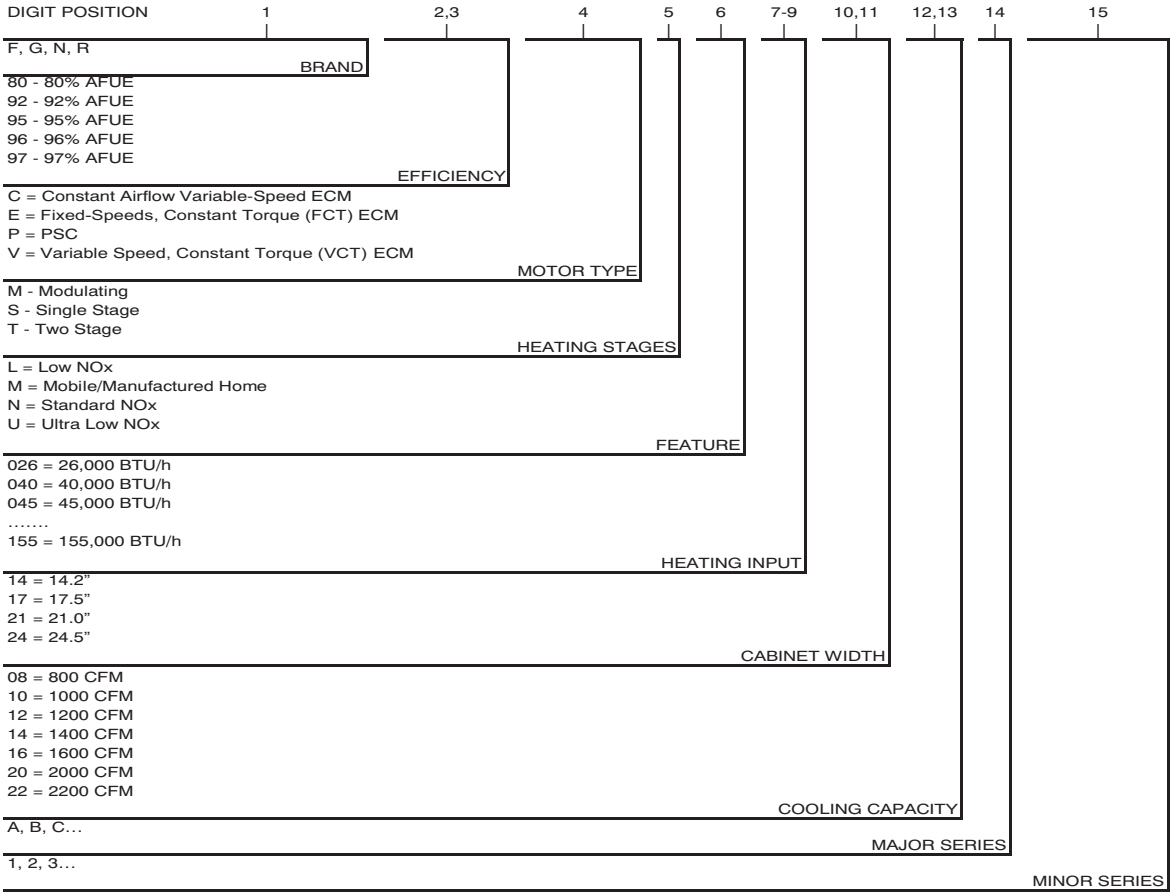

A190043

For California Residents:

For installation in SCAQMD only: This furnace does not meet the SCAQMD Rule 1111 14 ng/J NOx emission limit, and thus is subject to a mitigation fee of up to $450. This furnace is not eligible for the Clean Air Furnace Rebate Program: www.CleanAirFurnaceRebate.com

MINIMUM CLEARANCES TO COMBUSTIBLE MATERIALS FOR ALL UNITS

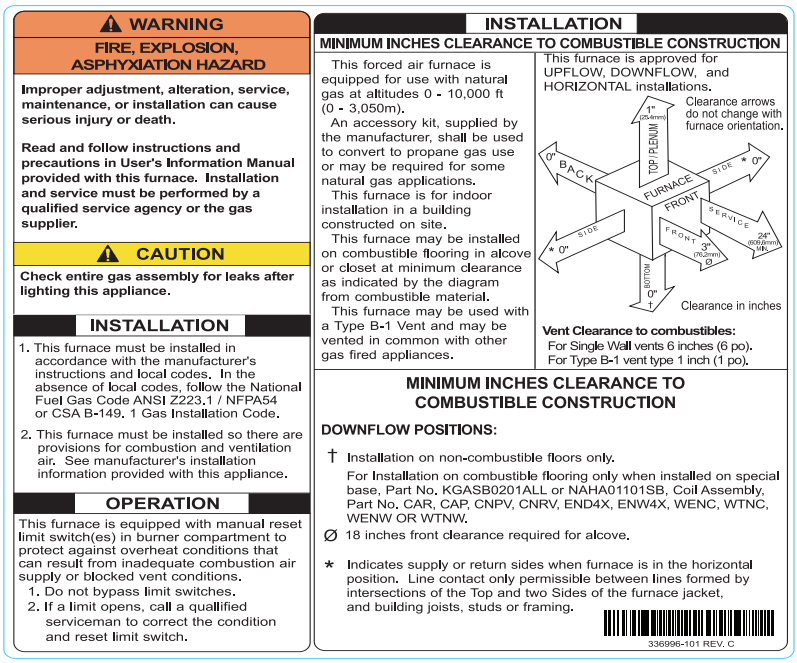

WARNING

FIRE, EXPLOSION, ASPHYXIATION HAZARD

Improper adjustment, alteration, service, maintenance, or installation can cause serious injury or death.

Read and follow instructions and precautions in User's Information Manual provided with this furnace. Installation and service must be performed by a qualified service agency or the gas supplier.

CAUTION

Check entire gas assembly for leaks after lighting this appliance.

INSTALLATION

1. This furnace must be installed in accordance with the manufacturer's instructions and local codes. In the absence of local codes, follow the National Fuel Gas Code ANSI Z223.1 / NFPA54 or CSA B-149. 1 Gas Installation Code.
2. This furnace must be installed so there are provisions for combustion and ventilation air. See manufacturer's installation information provided with this appliance.

OPERATION

This furnace is equipped with manual reset limit switch(es) in burner compartment to protect against overheat conditions that can result from inadequate combustion air supply or blocked vent conditions.

1. Do not bypass limit switches.
2. If a limit opens, call a quallified serviceman to correct the condition and reset limit switch.

INSTALLATION

MINIMUM INCHES CLEARANCE TO COMBUSTIBLE CONSTRUCTION

This forced air furnace is equipped for use with natural gas at altitudes 0 - 10,000 ft (0 - 3,050m).

An accessory kit, supplied by the manufacturer, shall be used to convert to propane gas use or may be required for some natural gas applications.

This furnace is for indoor installation in a building constructed on site.

This furnace may be installed on combustible flooring in alcove or closet at minimum clearance as indicated by the diagram from combustible material.

This furnace may be used with a Type B-1 Vent and may be vented in common with other gas fired appliances.

This furnace is approved for UPFLOW, DOWNFLOW, and HORIZONTAL installations.

Clearance arrows do not change with furnace orientation.

Clearance in inches

Vent Clearance to combustibles:
For Single Wall vents 6 inches (6 po).
For Type B-1 vent type 1 inch (1 po).

MINIMUM INCHES CLEARANCE TO COMBUSTIBLE CONSTRUCTION

DOWNFLOW POSITIONS:

† Installation on non-combustible floors only.
For Installation on combustible flooring only when installed on special base, Part No. KGASB0201ALL or NAHA01101SB, Coil Assembly, Part No. CAR, CAP, CNPV, CNRV, END4X, ENW4X, WENC, WTNC, WENW OR WTNW.

Ø 18 inches front clearance required for alcove.

* Indicates supply or return sides when furnace is in the horizontal position. Line contact only permissible between lines formed by intersections of the Top and two Sides of the furnace jacket, and building joists, studs or framing.

336996-101 REV. C

A10269

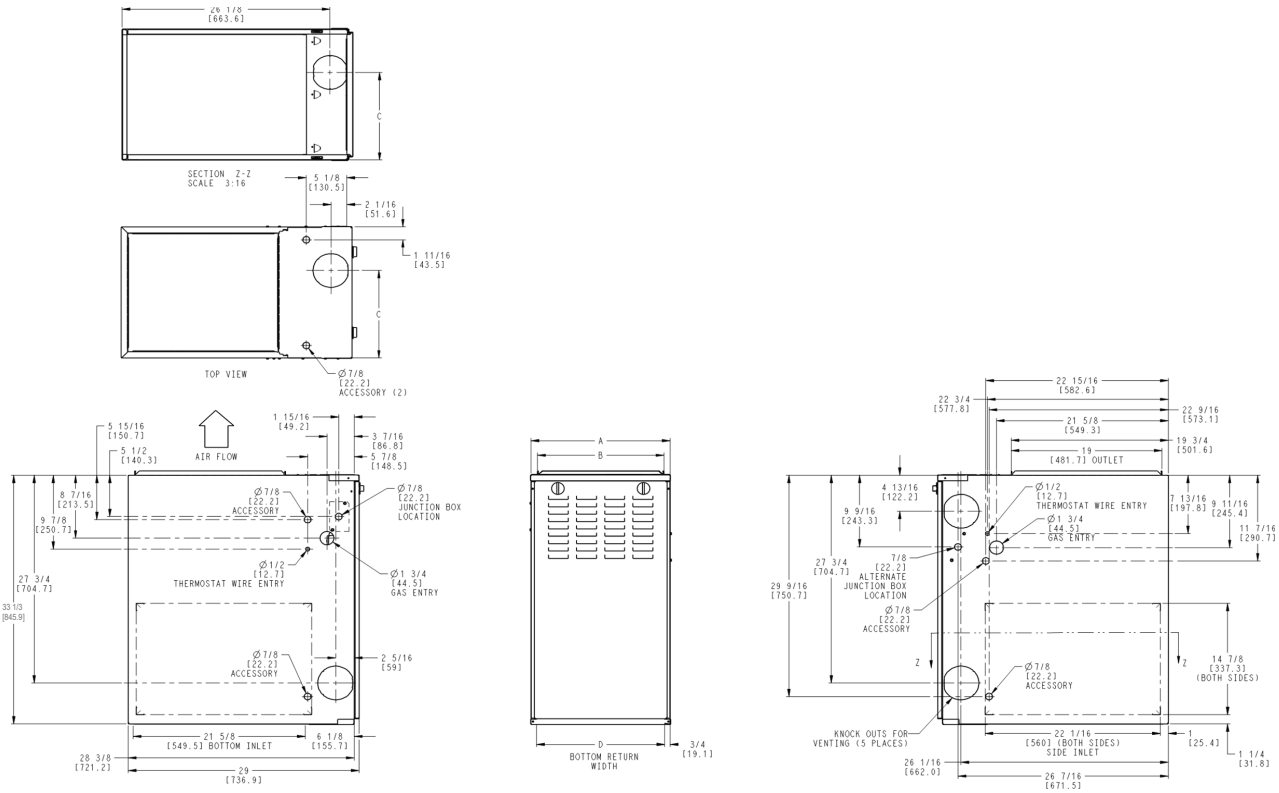

A190084

FURNACE SIZE	A CABINET WIDTH in (mm)	B OUTLET WIDTH in (mm)	C TOP AND BOTTOM FLUE COLLAR in (mm)	D BOTTOM INLET WIDTH in (mm)	FLUE COLLAR* in (mm)	SHIPPING WT. LB (KG)
G80CTL0451712	17-1/2 (445)	15-7/8 (403)	11-9/16 (294)	16 (406)	4 (102)	118 (53.5)
G80CTL0701412	14-3/16 (360)	12-9/16 (319)	9-5/16 (237)	12-11/16 (322)	4 (102)	118 (53.5)
G80CTL0701716	17-1/2 (445)	15-7/8 (403)	11-9/16 (294)	16 (406)	4 (102)	126 (57.1)
G80CTL0702120	21 (533)	19-3/8 (492)	13-5/16 (338)	19-1/2 (495)	4 (102)	147 (66.7)
G80CTL0901716	17-1/2 (445)	15-7/8 (403)	11-9/16 (294)	16 (406)	4 (102)	134 (60.8)
G80CTL0902120	21 (533)	19-3/8 (492)	13-5/16 (338)	19-1/2 (495)	4 (102)	153 (69.4)
G80CTL1102120	21 (533)	19-3/8 (492)	13-5/16 (338)	19-1/2 (495)	4 (102)	156 (70.7)
G80CTL1352422	24-1/2 (622)	22-7/8 (581)	15-1/16 (383)	23 (584)	4 (102)*	169 (76.6)

*. 135 size furnace require a 5 or 6-in. (127 or 152 mm) vent. Use a vent adapter between furnace and vent stack. See Installation Instructions for complete installation requirements.

SPECIFICATIONS

Unit Size			0451712	0701412	0701716	0702120
RATINGS AND PERFORMANCE						
Input Btuh* Nonweatherized ICS	All Standard, Low NOx Upflow	High	44,000	66,000	66,000	66,000
		Low	29,000	43,500	43,500	43500
Input Btuh* Nonweatherized ICS	All Low NOx Downflow/ Horizontal	High	42,000	63,000	63,000	63,000
		Low	29,000	43,500	43,500	43500
Output Capacity (Btuh) Nonweatherized ICS†	All Standard, Low NOx Upflow	High	35,000	54,000	53,000	53,000
		Low	23,000	35,000	35,000	35,000
Output Capacity (Btuh) Nonweatherized ICS†	All Low NOx Downflow/ Horizontal	High	34,000	51,000	51,000	51,000
		Low	23,000	35,000	35,000	35,000
AFUE			80%			
Certified Temperature Rise Range - °F (°C)		High	30-60 (17-33)	30-60 (17-33)	25-55 (14-30)	25-55 (14-30)
		Low	20-50 (11-28)	30-60 (17-33)	15-45 (8-25)	15-45 (8-25)
Certified External Static Pressure	Heat/Cool		0.10/0.50	0.12/0.50	0.12/0.50	0.12/0.50
Airflow CFM ‡	Heating High/Low		730/605	1160/735	1245/1040	1195/1085
	Max Cooling		1345	1395	1380	2150
ELECTRICAL						
Unit Volts-Hertz-Phase			115-60-1			
Operating Voltage Range	Min/Max		104/127			
Maximum Unit Amps			9.00	9.00	9.80	14.10
Maximum Wire Length (Measure 1 Way in Ft. (M))			30 (9.4)	30 (9.4)	28 (8.7)	31 (9.5)
Minimum Wire Size			14	14	14	12
Maximum Fuse or Ckt Bkr Size (Amps)**			15	15	15	20
Transformer (24v)			40va			
External Control Power Available	Heating		12va			
	Cooling		35va			
Air Conditioning Blower Relay			Standard			
CONTROLS						
Limit Control			SPST			
Heating Blower Control			Solid State Time Operation			
Burners (Monoport)			2	3	3	3
Gas Connection Size			½-in. NPT			
GAS CONTROLS						
Gas Valve (Redundant)	Mfr.		WhiteRodgers			
	Min. inlet pressure (In. W.C.)		4.5 (Natural Gas)			
	Max. inlet pressure (In. W.C.)		13.6 (Natural Gas)			
Ignition Device			Hot Surface			
Factory installed orifice			Size 43			
BLOWER DATA						
Direct-Drive Motor HP (ECM)			1/2	1/2	1/2	1
Motor Full Load Amps			7.7	7.7	8.5	12.8
RPM (Nominal)			1200	1200	1200	1200
Blower Wheel Diameter x Width - In. (mm)			11 x 8 (279x203)	10 x 6 (254x152)	11 x 8 (279x203)	11 x 10 (254x279)

*. Gas input ratings are certified for elevations to 2000 ft. (610 M) In USA for elevations above 2000 ft (610 M), reduce ratings 4 percent for each 1000 ft (305 M) above sea level. Refer to National Fuel Gas Code NFPA 54/ANSI Z223.1 or furnace installation instructions

†. Capacity in accordance with U.S. Government DOE test procedures.

‡. Airflow shown is for bottom only return air supply for Max Cooling Airflow and heating airflows (efficiency setting) at certified external static pressure. For air delivery above 1800 CFM, see Air Delivery table for other options. A filter is required for each return air supply. An airflow reduction of up to 7 percent may occur.

**. Time-delay type is recommended.

ICS Isolated Combustion System

SPECIFICATIONS (continued)

Unit Size			0901716	0902120	1102120	1352422
RATINGS AND PERFORMANCE						
Input Btuh* Nonweatherized ICS	All Standard, Low NOx Upflow	High	88,000	88,000	110,000	132,000
		Low	58,000	58,000	72,500	87,000
Input Btuh* Nonweatherized ICS	All Low NOx Downflow/ Horizontal	High	84,000	84,000	105,000	126,000
		Low	58,000	58,000	72,500	87,000
Output Capacity (Btuh) Nonweatherized ICS†	All Standard, Low NOx Upflow	High	71,000	71,000	89,000	107,000
		Low	47,000	47,000	59,000	70,000
Output Capacity (Btuh) Nonweatherized ICS†	All Low NOx Downflow/ Horizontal	High	68,000	68,000	85,000	102,000
		Low	47,000	47,000	59,000	70,000
AFUE			80%			
Certified Temperature Rise Range - °F (°C)		High	40-70 (22-39)	25-55 (14-30)	40-70 (22-39)	40-70 (22-39)
		Low	30-60 (17-33)	15-45 (8-25)	25-55 (14-31)	25-55 (14-31)
Certified External Static Pressure	Heat/Cool		0.15/0.50	0.15/0.50	0.20/0.50	0.20/0.50
Airflow CFM ‡	Heating High/Low		1195/960	1600/1435	1465/1295	1835/1660
	Max Cooling		1595	2330	2155	2265
ELECTRICAL						
Unit Volts-Hertz-Phase			115-60-1			
Operating Voltage Range	Min/Max		104/127			
Maximum Unit Amps			9.60	14.70	15.00	15.00
Maximum Wire Length (Measure 1 Way in Ft. (M))			29 (9.0)	30 (9.2)	29 (9.1)	29 (9.1)
Minimum Wire Size			14	12	12	12
Maximum Fuse or Ckt Bkr Size (Amps)**			15	20	20	20
Transformer (24v)			40va			
External Control	Heating		12va			
Power Available	Cooling		35va			
Air Conditioning Blower Relay			Standard			
CONTROLS						
Limit Control			SPST			
Heating Blower Control			Solid State Time Operation			
Burners (Monoport)			4	4	5	6
Gas Connection Size			½-in. NPT			
GAS CONTROLS						
Gas Valve (Redundant)	Mfr.		WhiteRodgers			
	Min. inlet pressure (In. W.C.)		4.5 (Natural Gas)			
	Max. inlet pressure (In. W.C.)		13.6 (Natural Gas)			
Ignition Device			Hot Surface			
Factory installed orifice			Size 43			
BLOWER DATA						
Direct-Drive Motor HP (ECM)			1/2	1	1	1
Motor Full Load Amps			7.7	12.8	12.8	12.8
RPM (Nominal)			1200	1200	1200	1200
Blower Wheel Diameter x Width - In. (mm)			10 x 8 (254x203)	11 x 11 (279x279)	11 x 10 (254x279)	11 x 11 (279x279)

*. Gas input ratings are certified for elevations to 2000 ft. (610 M) In USA for elevations above 2000 ft (610 M), reduce ratings 4 percent for each 1000 ft (305 M) above sea level. Refer to National Fuel Gas Code NFPA 54/ANSI Z223.1 or furnace installation instructions.

†. Capacity in accordance with U.S. Government DOE test procedures.

‡. Airflow shown is for bottom only return air supply for Max Cooling Airflow and heating airflows (efficiency setting) at certified external static pressure. For air delivery above 1800 CFM, see Air Delivery table for other options. A filter is required for each return air supply. An airflow reduction of up to 7 percent may occur.

**. Time-delay type is recommended.

ICS Isolated Combustion System

AIR DELIVERY - CFM (with Filter)*

(SW1-5 and SW4-3 set to OFF, except as indicated. See notes 1 and 2.)													
Unit Size: 0451712	**Clg/CF Switch settings**			**External Static Pressure (ESP)**									
Clg Switches	**SW2-3**	**SW2-2**	**SW2-1**	**0.1**	**0.2**	**0.3**	**0.4**	**0.5**	**0.6**	**0.7**	**0.8**	**0.9**	**1.0**
Clg Default:	OFF	OFF	OFF	1070	1080	1085	1095	1095	1100	1095	1090	1080	1070
CF Switches	**SW3-3**	**SW3-2**	**SW3-1**										
Low-Clg Default:	OFF	OFF	OFF	525	540	540	550	550	See note 4				
Cooling Airflow (SW2) Low-Cooling Airflow (SW3)	OFF	OFF	ON	525	540	540	550	550	See note 4				
	OFF	ON	OFF	700	720	715	730	735	745	745	745	735	725
	OFF	ON	ON	885	905	920	925	920	910	905	900	895	885
	ON	OFF	OFF	1070	1080	1085	1095	1095	1100	1095	1090	1080	1070
	ON	OFF	ON	1250	1265	1275	1280	1275	1265	1255	1240	1205	1170
	ON	ON	OFF	1425	1425	1410	1380	1340	1305	1270	1235	1200	1165
	ON	ON	ON	1425	1425	1410	1380	1340	1305	1270	1235	1200	1165
	Maximum Clg Airflow[2]			1480	1445	1415	1380	1345	1310	1275	1235	1200	1165
CF Switches	**SW3-3**	**SW3-2**	**SW3-1**										
Cont. Fan Default:	OFF	OFF	OFF	525	540	540	550	550	See note 4				
Continuous Fan Airflow (SW3)	OFF	OFF	ON	525	540	540	550	550	See note 4				
	OFF	ON	OFF	700	720	715	730	735	745	745	745	735	725
	OFF	ON	ON	885	905	920	925	920	910	905	900	895	885
	ON	OFF	OFF	1070	1080	1085	1095	1095	1100	1095	1090	1080	1070
	ON	OFF	ON	1070	1080	1085	1095	1095	1100	1095	1090	1080	1070
	ON	ON	OFF	1070	1080	1085	1095	1095	1100	1095	1090	1080	1070
	ON	ON	ON	1070	1080	1085	1095	1095	1100	1095	1090	1080	1070
Heating (SW1)	High Heat Airflow[3]			730	730	735	750	765	770	770	770	760	750
	Low Heat Airflow[3]			605	625	635	630	635	635	630	625	615	605
Unit Size: 0701412	**Clg/CF Switch settings**			**External Static Pressure (ESP)**									
Clg Switches	**SW2-3**	**SW2-2**	**SW2-1**	**0.1**	**0.2**	**0.3**	**0.4**	**0.5**	**0.6**	**0.7**	**0.8**	**0.9**	**1.0**
Clg Default:	OFF	OFF	OFF	1050	1050	1050	1050	1050	1050	1045	1035	1020	1000
CF Switches	**SW3-3**	**SW3-2**	**SW3-1**										
Low-Clg Default:	OFF	OFF	OFF	515	500	500	490	485	See note 4				
Cooling Airflow (SW2) Low-Cooling Airflow (SW3)	OFF	OFF	ON	515	500	500	490	485	See note 4				
	OFF	ON	OFF	690	680	675	680	675	See note 4				
	OFF	ON	ON	875	875	875	870	865	855	850	835	825	820
	ON	OFF	OFF	1050	1050	1050	1050	1050	1050	1045	1035	1020	1000
	ON	OFF	ON	1220	1225	1225	1225	1225	1220	1205	1190	1185	1170
	ON	ON	OFF	1220	1225	1225	1225	1225	1220	1205	1190	1185	1170
	ON	ON	ON	1220	1225	1225	1225	1225	1220	1205	1190	1185	1170
	Maximum Clg Airflow[2]			1395	1400	1400	1400	1395	1385	1370	1340	1300	1245
CF Switches	**SW3-3**	**SW3-2**	**SW3-1**										
Cont. Fan Default:	OFF	OFF	OFF	515	500	500	490	485	See note 4				
Continuous Fan Airflow (SW3)	OFF	OFF	ON	515	500	500	490	485	See note 4				
	OFF	ON	OFF	690	680	675	680	675	See note 4				
	OFF	ON	ON	875	875	875	870	865	855	850	835	825	820
	ON	OFF	OFF	1050	1050	1050	1050	1050	1050	1045	1035	1020	1000
	ON	OFF	ON	1220	1225	1225	1225	1225	1220	1205	1190	1185	1170
	ON	ON	OFF	1220	1225	1225	1225	1225	1220	1205	1190	1185	1170
	ON	ON	ON	1220	1225	1225	1225	1225	1220	1205	1190	1185	1170
Heating (SW1)	High Heat Airflow[3]			1160	1165	1175	1180	1180	1180	1180	1180	1180	1175
	Low Heat Airflow[3]			735	735	735	735	725	See note 4				

AIR DELIVERY - CFM (with Filter)* (continued)

(SW1-5 and SW4-3 set to OFF, except as indicated. See notes 1 and 2.)													
Unit Size: 0701716	**Clg/CF Switch settings**			**External Static Pressure (ESP)**									
Clg Switches	**SW2-3**	**SW2-2**	**SW2-1**	**0.1**	**0.2**	**0.3**	**0.4**	**0.5**	**0.6**	**0.7**	**0.8**	**0.9**	**1.0**
Clg Default:	OFF	OFF	OFF	1435	1435	1435	1420	1380	1345	1310	1270	1235	1200
CF Switches	**SW3-3**	**SW3-2**	**SW3-1**										
Low-Clg Default:	OFF	OFF	OFF	705	715	720	720	715	705	700	690	680	665
Cooling Airflow (SW2) Low-Cooling Airflow (SW3)	OFF	OFF	ON	530	535	530	520	505	See note 4				
	OFF	ON	OFF	705	715	720	720	715	705	700	690	680	665
	OFF	ON	ON	870	885	890	895	895	895	890	885	875	865
	ON	OFF	OFF	1110	1110	1110	1105	1100	1090	1085	1075	1065	1050
	ON	OFF	ON	1240	1240	1245	1245	1240	1235	1230	1225	1215	1210
	ON	ON	OFF	1435	1435	1435	1420	1380	1345	1310	1270	1235	1200
	ON	ON	ON	1435	1435	1435	1420	1380	1345	1310	1270	1235	1200
	Maximum Clg Airflow[2]			1510	1480	1445	1410	1375	1340	1305	1270	1235	1200
CF Switches	**SW3-3**	**SW3-2**	**SW3-1**										
Cont. Fan Default:	OFF	OFF	OFF	805	800	795	790	775	765	750	735	715	700
Continuous Fan Airflow (SW3)	OFF	OFF	ON	520	520	515	510	495	See note 4				
	OFF	ON	OFF	635	630	625	620	605	595	580	565	550	535
	OFF	ON	ON	805	800	795	790	775	765	750	735	715	700
	ON	OFF	OFF	805	800	795	790	775	765	750	735	715	700
	ON	OFF	ON	805	800	795	790	775	765	750	735	715	700
	ON	ON	OFF	805	800	795	790	775	765	750	735	715	700
	ON	ON	ON	805	800	795	790	775	765	750	735	715	700
Heating (SW1)	High Heat Airflow[3]			1245	1250	1250	1240	1235	1230	1225	1215	1205	1200
	Low Heat Airflow[3]			1040	1040	1035	1030	1030	1020	1010	1000	990	980
Unit Size: 0702120	**Clg/CF Switch settings**			**External Static Pressure (ESP)**									
Clg Switches	**SW2-3**	**SW2-2**	**SW2-1**	**0.1**	**0.2**	**0.3**	**0.4**	**0.5**	**0.6**	**0.7**	**0.8**	**0.9**	**1.0**
Clg Default:	OFF	OFF	OFF	1785	1815	1825	1825	1825	1820	1810	1805	1795	1755
CF Switches	**SW3-3**	**SW3-2**	**SW3-1**										
Low-Clg Default:	OFF	OFF	OFF	855	905	925	950	970	970	960	955	970	965
Cooling Airflow (SW2) Low-Cooling Airflow (SW3)	OFF	OFF	ON	670	735	765	775	790	See note 4				
	OFF	ON	OFF	855	905	925	950	970	970	960	955	970	965
	OFF	ON	ON	1040	1040	1050	1085	1085	1095	1100	1090	1080	1090
	ON	OFF	OFF	1235	1255	1290	1300	1315	1310	1310	1310	1295	1285
	ON	OFF	ON	1495	1475	1490	1490	1495	1490	1485	1470	1460	1455
	ON	ON	OFF	1785	1815	1825	1825	1825	1820	1810	1805	1795	1755
	ON	ON	ON	2145	2140	2135	2125	2110	2090	2040	1965	1875	1800
	Maximum Clg Airflow[2]			2225	2215	2205	2190	2150	2110	2045	1970	1880	1800
CF Switches	**SW3-3**	**SW3-2**	**SW3-1**										
Cont. Fan Default:	OFF	OFF	OFF	855	905	925	950	970	970	960	955	970	965
Continuous Fan Airflow (SW3)	OFF	OFF	ON	670	735	765	775	790	See note 4				
	OFF	ON	OFF	855	905	925	950	970	970	960	955	970	965
	OFF	ON	ON	1040	1040	1050	1085	1085	1095	1100	1090	1080	1090
	ON	OFF	OFF	1040	1040	1050	1085	1085	1095	1100	1090	1080	1090
	ON	OFF	ON	1040	1040	1050	1085	1085	1095	1100	1090	1080	1090
	ON	ON	OFF	1040	1040	1050	1085	1085	1095	1100	1090	1080	1090
	ON	ON	ON	1040	1040	1050	1085	1085	1095	1100	1090	1080	1090
Heating (SW1)	High Heat Airflow[3]			1195	1215	1240	1250	1255	1270	1265	1260	1255	1245
	Low Heat Airflow[3]			1085	1090	1115	1135	1160	1160	1155	1150	1150	1140

AIR DELIVERY - CFM (with Filter)* (continued)

(SW1-5 and SW4-3 set to OFF, except as indicated. See notes 1 and 2.)													
Unit Size: 0901716	**Clg/CF Switch settings**			**External Static Pressure (ESP)**									
Clg Switches	**SW2-3**	**SW2-2**	**SW2-1**	**0.1**	**0.2**	**0.3**	**0.4**	**0.5**	**0.6**	**0.7**	**0.8**	**0.9**	**1.0**
Clg Default:	OFF	OFF	OFF	1350	1370	1390	1390	1400	1390	1380	1380	1360	1340
CF Switches	**SW3-3**	**SW3-2**	**SW3-1**										
Low-Clg Default:	OFF	OFF	OFF	680	680	680	675	670	See note 4				
Cooling Airflow (SW2) Low-Cooling Airflow (SW3)	OFF	OFF	ON	525	520	525	495	475	See note 4				
	OFF	ON	OFF	680	680	680	675	670	See note 4				
	OFF	ON	ON	815	845	845	855	850	850	845	835	820	805
	ON	OFF	OFF	1005	1005	1015	1035	1040	1040	1035	1030	1025	1010
	ON	OFF	ON	1190	1200	1200	1205	1205	1215	1205	1200	1185	1170
	ON	ON	OFF	1350	1370	1390	1390	1400	1390	1380	1380	1360	1340
	ON	ON	ON	1350	1370	1390	1390	1400	1390	1380	1380	1360	1340
	Maximum Clg Airflow[2]			1595	1600	1600	1600	1595	1555	1505	1465	1430	1390
CF Switches	SW3-3	SW3-2	SW3-1										
Cont. Fan Default:	OFF	OFF	OFF	680	680	680	675	670	See note 4				
Continuous Fan Airflow (SW3)	OFF	OFF	ON	525	520	525	495	475	See note 4				
	OFF	ON	OFF	680	680	680	675	670	See note 4				
	OFF	ON	ON	815	845	845	855	850	850	845	835	820	805
	ON	OFF	OFF	1005	1005	1015	1035	1040	1040	1035	1030	1025	1010
	ON	OFF	ON	1190	1200	1200	1205	1205	1215	1205	1200	1185	1170
	ON	ON	OFF	1190	1200	1200	1205	1205	1215	1205	1200	1185	1170
	ON	ON	ON	1190	1200	1200	1205	1205	1215	1205	1200	1185	1170
Heating (SW1)	High Heat Airflow[3]			1190	1205	1210	1210	1210	1210	1210	1210	1210	1200
	Low Heat Airflow[3]			950	970	985	985	985	985	985	985	985	980
Unit Size: 0902120	**Clg/CF Switch settings**			**External Static Pressure (ESP)**									
Clg Switches	**SW2-3**	**SW2-2**	**SW2-1**	**0.1**	**0.2**	**0.3**	**0.4**	**0.5**	**0.6**	**0.7**	**0.8**	**0.9**	**1.0**
Clg Default:	OFF	OFF	OFF	1785	1805	1815	1835	1840	1855	1860	1850	1845	1835
CF Switches	**SW3-3**	**SW3-2**	**SW3-1**										
Low-Clg Default:	OFF	OFF	OFF	925	935	945	960	980	965	940	925	920	900
Cooling Airflow (SW2) Low-Cooling Airflow (SW3)	OFF	OFF	ON	715	715	735	730	730	See note 4				
	OFF	ON	OFF	925	935	945	960	980	965	940	925	920	900
	OFF	ON	ON	1040	1045	1030	1055	1060	1045	1060	1045	1030	1005
	ON	OFF	OFF	1295	1320	1285	1335	1350	1340	1350	1335	1310	1300
	ON	OFF	ON	1505	1525	1480	1480	1490	1475	1465	1455	1450	1445
	ON	ON	OFF	1785	1805	1815	1835	1840	1855	1860	1850	1845	1835
	ON	ON	ON	2250	2265	2270	2265	2255	2245	2220	2175	2120	2060
	Maximum Clg Airflow2			2375	2375	2375	2365	2330	2285	2235	2185	2140	2075
CF Switches	**SW3-3**	**SW3-2**	**SW3-1**										
Cont. Fan Default:	OFF	OFF	OFF	925	935	945	960	980	965	940	925	920	900
Continuous Fan Airflow (SW3)	OFF	OFF	ON	715	715	735	730	730	See note 4				
	OFF	ON	OFF	925	935	945	960	980	965	940	925	920	900
	OFF	ON	ON	1040	1045	1030	1055	1060	1045	1060	1045	1030	1005
	ON	OFF	OFF	1295	1320	1285	1335	1350	1340	1350	1335	1310	1300
	ON	OFF	ON	1505	1525	1480	1480	1490	1475	1465	1455	1450	1445
	ON	ON	OFF	1505	1525	1480	1480	1490	1475	1465	1455	1450	1445
	ON	ON	ON	1505	1525	1480	1480	1490	1475	1465	1455	1450	1445
Heating (SW1)	High Heat Airflow[3]			1590	1610	1605	1605	1600	1605	1610	1610	1615	1620
	Low Heat Airflow[3]			1425	1450	1440	1465	1470	1455	1450	1440	1435	1430

AIR DELIVERY - CFM (with Filter)* (continued)

(SW1-5 and SW4-3 set to OFF, except as indicated. See notes 1 and 2.)													
Unit Size: 1102120	**Clg/CF Switch settings**			**External Static Pressure (ESP)**									
Clg Switches	**SW2-3**	**SW2-2**	**SW2-1**	**0.1**	**0.2**	**0.3**	**0.4**	**0.5**	**0.6**	**0.7**	**0.8**	**0.9**	**1.0**
Clg Default:	OFF	OFF	OFF	1750	1750	1750	1750	1750	1750	1750	1750	1740	1725
CF Switches	**SW3-3**	**SW3-2**	**SW3-1**										
Low-Clg Default:	OFF	OFF	OFF	875	875	875	875	875	See note 4				
Cooling Airflow (SW2) Low-Cooling Airflow (SW3)	OFF	OFF	ON	700	700	700	700	700	See note 4				
	OFF	ON	OFF	875	875	875	875	875	See note 4				
	OFF	ON	ON	1050	1050	1050	1050	1050	See note 4				
	ON	OFF	OFF	1225	1225	1225	1225	1225	1225	1225	1225	1225	1225
	ON	OFF	ON	1400	1400	1400	1400	1400	1400	1400	1400	1400	1400
	ON	ON	OFF	1750	1750	1750	1750	1750	1750	1750	1750	1740	1725
	ON	ON	ON	2100	2100	2100	2100	2090	2075	2055	2040	2005	1970
	Maximum Clg Airflow[2]			2200	2190	2190	2180	2155	2145	2125	2100	2080	2020
CF Switches	**SW3-3**	**SW3-2**	**SW3-1**										
Cont. Fan Default:	OFF	OFF	OFF	875	875	875	875	875	See note 4				
Continuous Fan Airflow (SW3)	OFF	OFF	ON	700	700	700	700	700	See note 4				
	OFF	ON	OFF	875	875	875	875	875	See note 4				
	OFF	ON	ON	1050	1050	1050	1050	1050	See note 4				
	ON	OFF	OFF	1225	1225	1225	1225	1225	1225	1225	1225	1225	1225
	ON	OFF	ON	1400	1400	1400	1400	1400	1400	1400	1400	1400	1400
	ON	ON	OFF	1400	1400	1400	1400	1400	1400	1400	1400	1400	1400
	ON	ON	ON	1400	1400	1400	1400	1400	1400	1400	1400	1400	1400
Heating (SW1)	High Heat Airflow[3]			1460	1465	1475	1475	1475	1475	1475	1475	1465	1465
	Low Heat Airflow[3]			1275	1295	1315	1320	1320	1320	1320	1320	1320	1315
Unit Size: 1352422	**Clg/CF Switch settings**			**External Static Pressure (ESP)**									
Clg Switches	**SW2-3**	**SW2-2**	**SW2-1**	**0.1**	**0.2**	**0.3**	**0.4**	**0.5**	**0.6**	**0.7**	**0.8**	**0.9**	**1.0**
Clg Default:	OFF	OFF	OFF	1750	1765	1765	1775	1780	1785	1785	1775	1770	1765
CF Switches	**SW3-3**	**SW3-2**	**SW3-1**										
Low-Clg Default:	OFF	OFF	OFF	860	880	895	900	905	900	890	865	845	825
Cooling Airflow (SW2) Low-Cooling Airflow (SW3)	OFF	OFF	ON	690	710	715	710	690	See note 4				
	OFF	ON	OFF	860	880	895	900	905	900	890	865	845	825
	OFF	ON	ON	1015	1050	1070	1080	1085	1095	1095	1090	1085	1075
	ON	OFF	OFF	1185	1220	1245	1260	1270	1275	1280	1280	1285	1280
	ON	OFF	ON	1400	1415	1420	1425	1425	1420	1415	1410	1400	1390
	ON	ON	OFF	1750	1765	1765	1775	1780	1785	1785	1775	1770	1765
	ON	ON	ON	2080	2095	2100	2110	2105	2115	2125	2115	2120	2090
	Maximum Clg Airflow[2]			2240	2255	2265	2270	2265	2255	2220	2175	2135	2085
CF Switches	**SW3-3**	**SW3-2**	**SW3-1**										
Cont. Fan Default:	OFF	OFF	OFF	860	880	895	900	905	900	890	865	845	825
Continuous Fan Airflow (SW3)	OFF	OFF	ON	690	710	715	710	690	See note 4				
	OFF	ON	OFF	860	880	895	900	905	900	890	865	845	825
	OFF	ON	ON	1015	1050	1070	1080	1085	1095	1095	1090	1085	1075
	ON	OFF	OFF	1185	1220	1245	1260	1270	1275	1280	1280	1285	1280
	ON	OFF	ON	1400	1415	1420	1425	1425	1420	1415	1410	1400	1390
	ON	ON	OFF	1400	1415	1420	1425	1425	1420	1415	1410	1400	1390
	ON	ON	ON	1400	1415	1420	1425	1425	1420	1415	1410	1400	1390
Heating (SW1)	High Heat Airflow[3]			1825	1835	1850	1855	1860	1860	1855	1850	1845	1840
	Low Heat Airflow[3]			1645	1660	1670	1675	1675	1675	1675	1670	1665	1660

1. Nominal 350 CFM/ton cooling airflow is delivered with SW1-5 and SW4-3 set to OFF.
   Set SW1-5 to ON for nominal 400 CFM/ton (+15% airflow).
   Set SW4-3 to ON for nominal 325 CFM/ton (-7% airflow).
   Set both SW1-5 and SW4-3 on ON for nominal 370 CFM/ton (+7% airflow).
   This applies to Cooling and Low-Cooling airflow, but does not affect continuous fan airflow.
   The above adjustments in airflow are subject to motor horsepower range/capacity.
2. Maximum cooling airflow is achieved when switches SW2-1, SW2-2, SW2-3 and SW1-5 are set to ON, and SW4-3 is set to OFF.
3. All heating CFM's are when comfort/efficiency adjustment switch (SW1-4) is set to OFF
4. Ductwork must be sized for high-heating CFM within the operational range of ESP. Operation within the blank areas of the chart is not recommended because high-heat operation will be above 1.0 ESP.
5. All airflows on 21" casing size furnaces are 5% less on side return only installations.

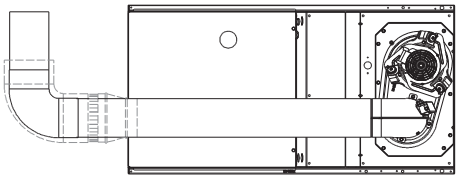

SEE NOTES: 1,2,4,5,7,8,9

HORIZONTAL RIGHT

A02068

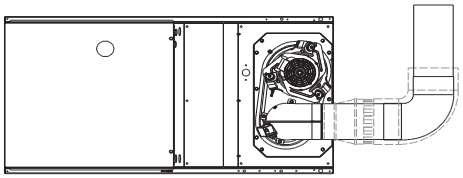

SEE NOTES: 1,2,4,7,8,9

HORIZONTAL RIGHT

A02069

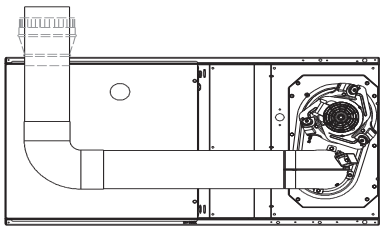

SEE NOTES: 1,2,4,5,7,8,9

HORIZONTAL RIGHT

A02070

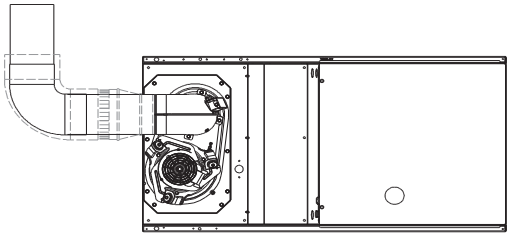

SEE NOTES: 1,2,4,7,8,9

HORIZONTAL LEFT

A02064

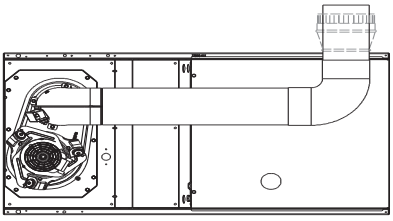

SEE NOTES: 1,2,4,5,7,8,9

HORIZONTAL LEFT

A02065

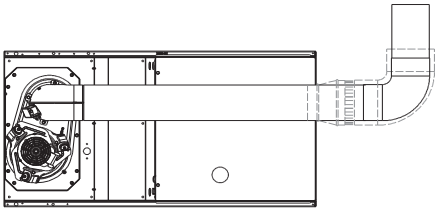

SEE NOTES: 1,2,4,5,7,8,9

HORIZONTAL LEFT

A02067

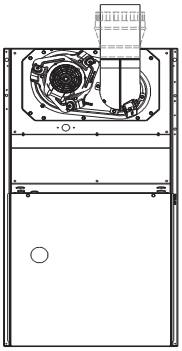

SEE NOTES: 1,2,4,7,8,9

UPFLOW

A02058

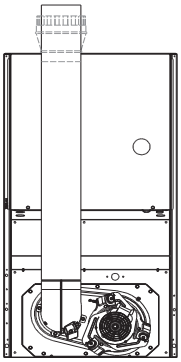

SEE NOTES: 1,2,4,5,7,8,9

DOWNFLOW

A02061

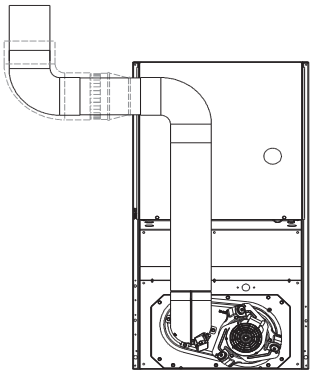

SEE NOTES:1,2,3,4,5,7,8,9

DOWNFLOW

A02060

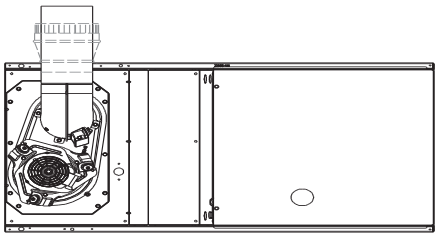

SEE NOTES: 1,2,4,5,7,8,9

HORIZONTAL LEFT

A02066

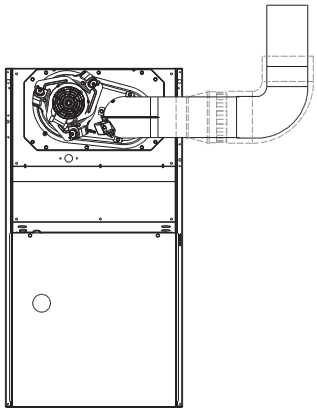

SEE NOTES: 1,2,3,4,7,8,9

UPFLOW

A02059

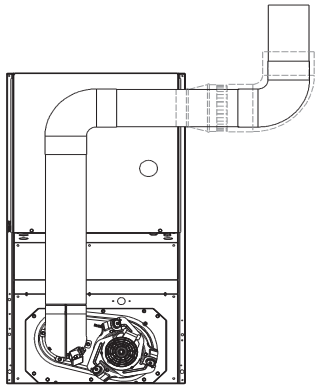

SEE NOTES: 1,2,3,4,7,8,9

DOWNFLOW

A02063

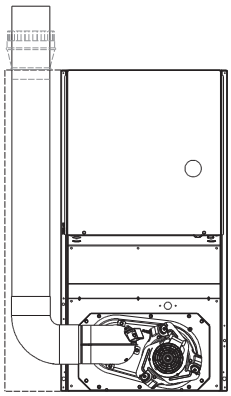

SEE NOTES: 1,2,4,5,6,7,8,9

DOWNFLOW

A02062

VENTING NOTES

1. For common vent, vent connector sizing and vent material: United States, latest edition of the National Fuel Gas Code (NFGC), ANSI Z223.1/NFPA 54.
2. Immediately increase to 5-in. (127 mm) vent connector outside furnace casing when 5-in. (127 mm) vent connector required, refer to Note 1.
3. Side outlet vent for upflow and downflow installations must use Type B vent immediately after exiting the furnace, except when Downflow Vent Guard is used in downflow position.
4. Type B vent where required, refer to Note 1.
5. 4-in. (102 mm) single wall vent must be used inside furnace casing and the Downflow Vent Guard Kit.
6. Accessory Downflow Vent Guard Kit required in downflow installations with bottom vent configuration.
7. Chimney Adapter Kit required for exterior masonry chimney applications. Refer to Chimney Adapter Kits for sizing and complete application details.
8. Secure vent connector to furnace elbow with (2) corrosion-resistant sheet metal screws, space approximately 180 apart.
9. Secure all other single wall vent connector joints with (3) corrosion-resistant screws spaced approximately 120 apart. Secure Type B vent connectors per vent connector manufacturer’s recommendations.

ACCESSORIES

PART NUMBER	DESCRIPTION	0451712	0701412	0701716	0702120
FHG1425-2*	Bottom Filter Rack, 14 inch	-	X	-	-
FHG1625-2*	Bottom Filter Rack, 17 inch	X	-	X	-
FHG2025-2*	Bottom Filter Rack, 21 inch	-	-	-	X
325531-402*	Washable filter, 3/4 inch 16 X 25	X	X	X	-
325531-403*	Washable filter, 3/4 inch 21 X 25	-	-	-	X
325531-404*	Washable filter, 3/4 inch 24 X 25	-	-	-	X
NAHA01101SB	Combustible Floor Base (Not required when evaporator coil case is used for downflow)	X	X	X	X
NAHB00301VC	Downflow Vent Guard (Not required when vent is routed through cabinet)	X	X	X	X
NAHA00401DH	Chimney Adapter Kit 4-in. vent	X	X	X	X
NAHA00301DH	Chimney Adapter Kit 5-in. vent	-	-	-	-
AGAGC8NPS01A†	Natural-to-Propane Conversion Kit *	X	X	X	X
AGAGC8PNS01A†	Propane-to-Natural Conversion Kit *	X	X	X	X
NAHA00201HL	High Altitude Kit	X	X	X	X
TSTAT0201CW	Observer Control System - Self Configuring Communicating Control	X	X	X	X
SYST0101CW	ION™ Control System - Self Configuring Communicating Control	X	X	X	X

PART NUMBER	DESCRIPTION	0901716	0902120	1102120	1352422
FHG1625-2*	Bottom Filter Rack, 17 inch	X	-	-	-
FHG2025-2*	Bottom Filter Rack, 21 inch	-	X	X	-
FHG2424-2*	Bottom Filter Rack, 24 inch	-	-	-	X
325531-402*	Washable filter, 3/4 inch 16 X 25	X	-	-	-
325531-403*	Washable filter, 3/4 inch 21 X 25	-	X	X	-
325531-404*	Washable filter, 3/4 inch 24 X 25	-	-	-	X
NAHA01101SB	Combustible Floor Base (Not required when evaporator coil case is used for downflow)	X	X	X	X
NAHB00301VC	Downflow Vent Guard (Not required when vent is routed through cabinet)	X	X	X	X
NAHA00401DH	Chimney Adapter Kit 4-in. vent	X	X	X	-
NAHA00301DH	Chimney Adapter Kit 5-in. vent	-	-	-	X
AGAGC8NPS01A†	Natural-to-Propane Conversion Kit	X	X	X	X
AGAGC8PNS01A†	Propane-to-Natural Conversion Kit	X	X	X	X
NAHA00201HL	High Altitude Kit	X	X	X	X
SYST0101CW	ION™ Control System - Self Configuring Communicating Control	X	X	X	X

*. Purchased through FAST Parts
†. Factory authorized and field installed. Gas conversion kits are CSA recognized.
X Accessory available

© 2020 Carrier. All rights reserved.

Manufacturer reserves the right to change, at any time, specifications and designs without notice and without obligations.