N80VSL (Series B)
80% AFUE, Non-Communicating, Single Stage, Variable 25-Speed ECM Motor, 4-Way Multipoise, Non-Condensing Gas Furnace

TEMPSTAR®
Heating and Cooling Products

Product Data

A200116

Representative drawing only. Some product models may vary.

⚠ WARNING

This furnace is not designed for use in mobile homes, trailers, or recreational vehicles. Such use could result in property damage and/or death.

DESIGN CERTIFIED

AHRI CERTIFIED™ www.ahridirectory.org

Use of the AHRI Certified TM Mark indicates a manufacturer's participation in the program. For verification of certification for individual products, go to www.ahridirectory.org .

Certified System ISO 9001 Quality

A200115

•

EASIER TO SELL

- Variable 25-speed, constant torque (VCT) ECM blower motor
- Enhanced diagnostics with easy to read 3 digit display for faults and status
- 80% AFUE
- Flame roll-out sensors standard
- Category I venting
- Blocked vent switch
- Louvered door
- 24 VAC humidifier terminal
- Electronic air cleaner terminal
- Select sizes approved for twinning, refer to accessory kit listing
- Low NOx units can be installed in air quality management districts with a 40ng/J NOx emissions limit
- Cabinet air leakage less than 2.0% at 1.0 in. w.c. and cabinet air leakage less than 1.4% at 0.5 in. w.c. when tested in accordance with ASHRAE standard 193

TOUGHER

- Adjustable heating blower OFF delay
- Factory set blower ON delay

EASIER TO INSTALL AND SERVICE

- On-board NFC antenna makes setup a tap away when using the service technician app
- 33-1/3" (847mm) high, for ease of installation
- Quarter turn knobs for easy door removal and secure attachment
- Convertible to propane gas conversion accessory kit
- Twinning capable with accessory kit
- Four position - upflow/downflow/horizontal (left/right) installation
- Three position vent elbow capability
- Through the casing flue pipe for counterflow applications
- Common venting with other Category I appliances
- Masonry chimney adapter available
- Slide out blower assembly

LIMITED WARRANTY*

- Default 5-year parts limited warranty
- 20-year heat exchanger limited warranty
- 10-year parts limited warranty with timely registration* Equipment must be registered within 90 days of original installation, except in jurisdictions where warranty benefits cannot be conditioned on registration.

* Applies to original purchaser/homeowner and not available to subsequent owners, except in jurisdictions where laws dictate otherwise.

UNIT PERFORMANCE DATA

Unit Size	Heating Input	Efficiency AFUE	Cooling Capacity CFM range @ .5 in. w.c. (125 Pa)	Operating Dimensions Height x Width x Depth in (mm)	Shipping Weight lbs(kg)
0451412	44,000	80%	185-1345	33-1/3 x 14-3/16 x 29 (847 x 360x 737)	111 (50.3)
0701412	66,000	80%	220-1340	33-1/3 x 14-3/16 x 29 (847 x 360x 737)	118 (53.5)
0701716	66,000	80%	245-1680	33-1/3 x 17-1/2 x 29 (847 x 445 x 737)	129 (58.5)
0901716	88,000	80%	340-1480	33-1/3 x 17-1/2 x 29 (847 x 445 x 737)	134 (60.8)
0902120	88,000	80%	330-2285	33-1/3 x 21 x 29 (847 x 533 x 737)	149 (67.6)
1102122	110,000	80%	375-2345	33-1/3 x 21 x 29 (847 x 533 x 737)	155 (70.3)
1352422	132,000	80%	340-2330	33-1/3 x 24-1/2 x 29 (847 x 622x 737)	170 (77.1)

DIMENSIONAL DATA

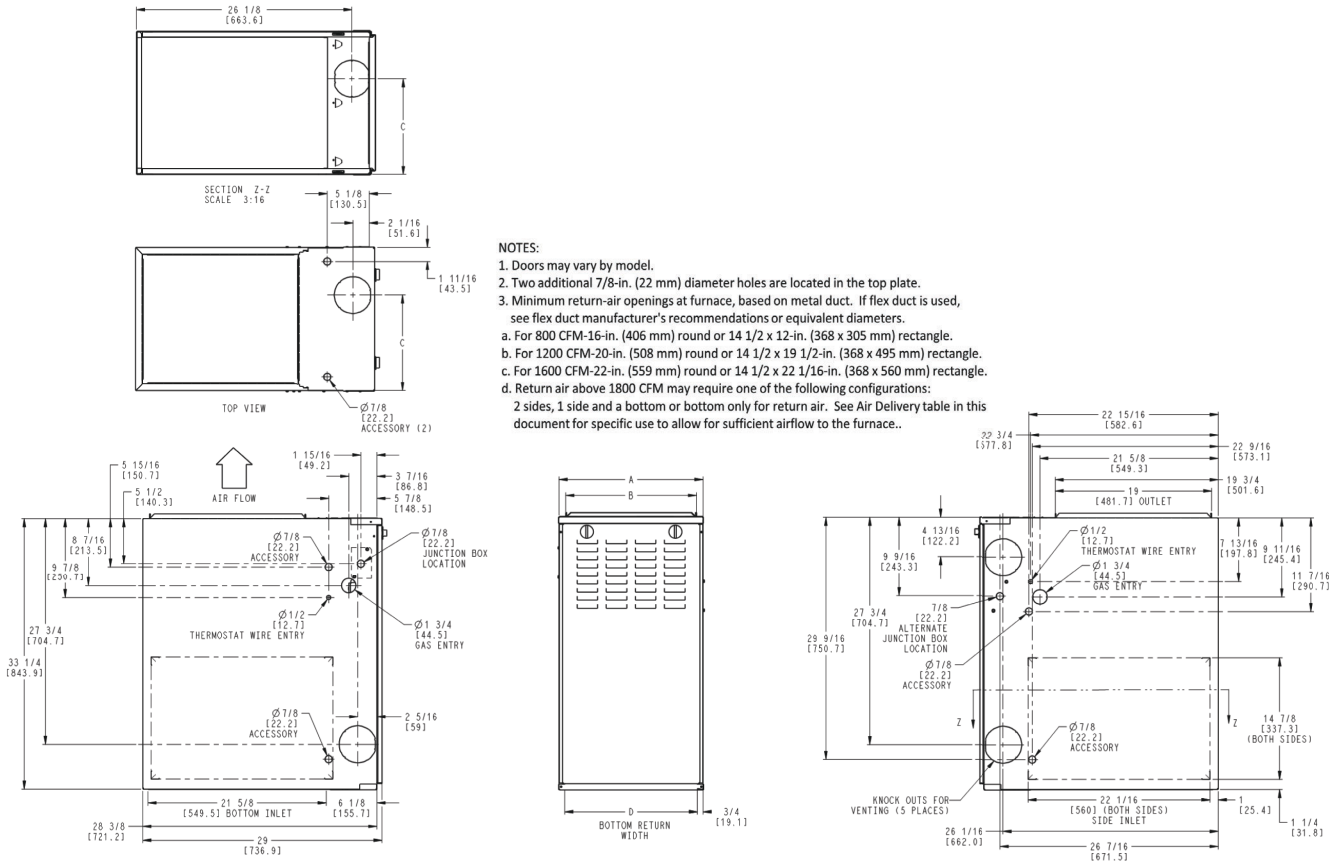

NOTES:
1. Doors may vary by model.
2. Two additional 7/8-in. (22 mm) diameter holes are located in the top plate.
3. Minimum return-air openings at furnace, based on metal duct. If flex duct is used, see flex duct manufacturer's recommendations or equivalent diameters.
a. For 800 CFM-16-in. (406 mm) round or 14 1/2 x 12-in. (368 x 305 mm) rectangle.
b. For 1200 CFM-20-in. (508 mm) round or 14 1/2 x 19 1/2-in. (368 x 495 mm) rectangle.
c. For 1600 CFM-22-in. (559 mm) round or 14 1/2 x 22 1/16-in. (368 x 560 mm) rectangle.
d. Return air above 1800 CFM may require one of the following configurations: 2 sides, 1 side and a bottom or bottom only for return air. See Air Delivery table in this document for specific use to allow for sufficient airflow to the furnace..

NOTE: ALL DIMENSIONS IN INCH (MM)

U.S. ECCN: Not Subject to Regulation (N.S.R.)

A210785

Dimensions

Unit Size	A CABINET WIDTH	B OUTLET WIDTH	C TOP AND BOTTOM FLUE COLLAR	D BOTTOM INLET WIDTH	VENT CONNECTION SIZE	SHIP WT. LB. (KG)
0451412	14-3/16 (360)	12-9/16 (319)	9-5/16 (237)	12-11/16 (322)	4 (102)	111 (50.3)
0701412	14-3/16 (360)	12-9/16 (319)	9-5/16 (237)	12-11/16 (322)	4 (102)	118 (53.5)
0701716	17-1/2 (445)	15-7/8 (403)	11-9/16 (294)	16 (406)	4 (102)	129 (58.5)
0901716	17-1/2 (445)	15-7/8 (403)	11-9/16 (294)	16 (406)	4 (102)	134 (60.8)
0902120	21 (533)	19-3/8 (492)	13-5/16 (338)	19-1/2 (495)	4 (102)	149 (67.6)
1102122	21 (533)	19-3/8 (492)	13-5/16 (338)	19-1/2 (495)	4 (102)	155 (70.3)
1352422	24-1/2 (622)	22-7/8 (581	15-1/16 (383)	23 (584)	4 (102)*	170 (77.1)

*. 135 size furnaces require a 5 or 6-in. (127 or 152 mm) vent. Use a vent adapter between furnace and vent stack. See Installation Instructions for complete installation requirements.

Manufacturer reserves the right to change, at any time, specifications and designs without notice and without obligations.

MODEL NUMBER NOMENCLATURE

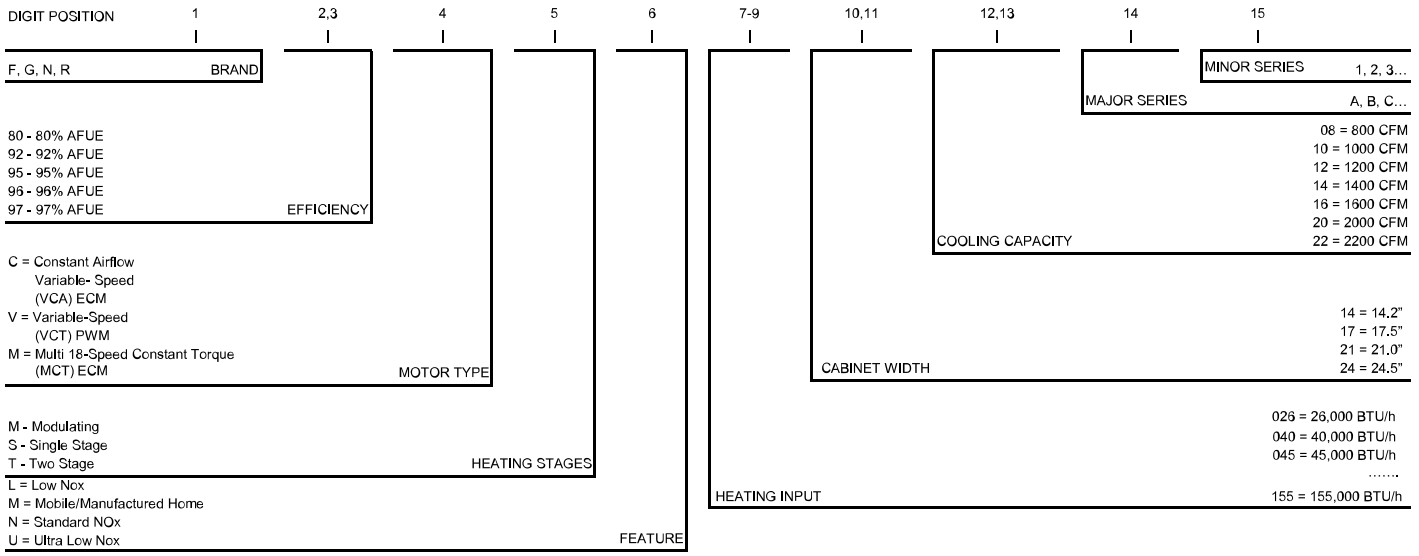

A221575

FURNACE COMPONENTS

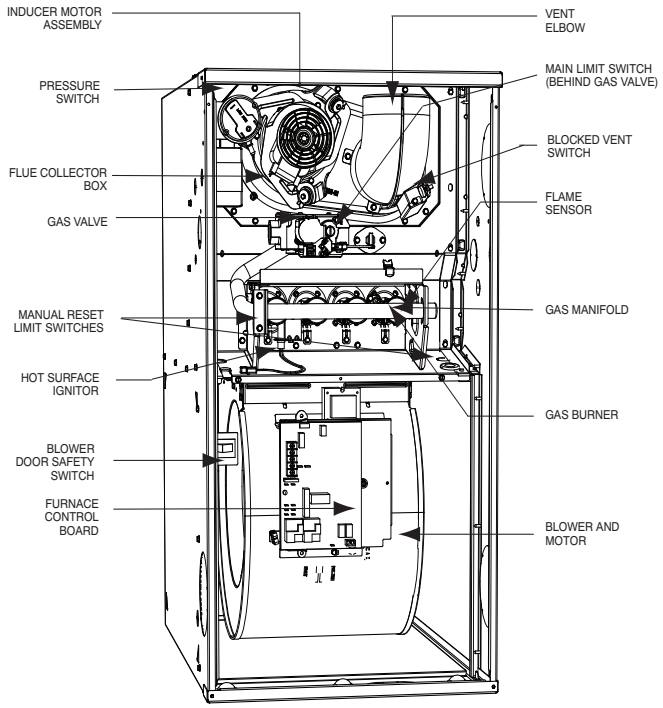

A190086

NOTE: The furnaces are factory shipped for use with natural gas. These furnaces can be field-converted for propane gas with a factory-authorized and listed accessory conversion kit.

CLEARANCES

⚠ WARNING — **ELECTRIC SHOCK AND MOVING PARTS HAZARD**
High voltage and rotating fan blades may be present in blower compartment when door switch is pressed. Keep hands clear.

⚠ WARNING
FIRE, EXPLOSION, ASPHYXIATION HAZARD

Improper adjustment, alteration, service, maintenance, or installation can cause serious injury or death.

Read and follow instructions and precautions in User's Information Manual provided with this furnace. Installation and service must be performed by a qualified service agency or the gas supplier.

⚠ CAUTION

Check entire gas assembly for leaks after lighting this appliance.

INSTALLATION

1. This furnace must be installed in accordance with the manufacturer's instructions and local codes. In the absence of local codes, follow the National Fuel Gas Code ANSI Z223.1 / NFPA54 or CSA B-149. 1 Gas Installation Code.
2. This furnace must be installed so there are provisions for combustion and ventilation air. See manufacturer's installation information provided with this appliance.

OPERATION

This furnace is equipped with manual reset limit switch(es) in burner compartment to protect against overheat conditions that can result from inadequate combustion air supply or blocked vent conditions.

1. Do not bypass limit switches.
2. If a limit opens, call a quallified serviceman to correct the condition and reset limit switch.

INSTALLATION

MINIMUM INCHES CLEARANCE TO COMBUSTIBLE CONSTRUCTION

This forced air furnace is equipped for use with natural gas at altitudes 0 - 10,000 ft (0 - 3,050m).

An accessory kit, supplied by the manufacturer, shall be used to convert to propane gas use or may be required for some natural gas applications.

This furnace is for indoor installation in a building constructed on site.

This furnace may be installed on combustible flooring in alcove or closet at minimum clearance as indicated by the diagram from combustible material.

This furnace may be used with a Type B-1 Vent and may be vented in common with other gas fired appliances.

This furnace is approved for UPFLOW, DOWNFLOW, and HORIZONTAL installations.

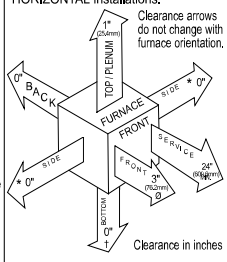

Vent Clearance to combustibles:
For Single Wall vents 6 inches (6 po).
For Type B-1 vent type 1 inch (1 po).

MINIMUM INCHES CLEARANCE TO COMBUSTIBLE CONSTRUCTION

DOWNFLOW POSITIONS:

† Installation on non-combustible floors only. For installation on combustible flooring only when installed on a manufacturer approved special base kit or manufacturer recommended coil assembly.

Ø 18 inches front clearance required for alcove.

* Indicates supply or return sides when furnace is in the horizontal position. Line contact only permissible between lines formed by intersections of the Top and two Sides of the furnace jacket, and building joists, studs or framing.

336996-101 REV.F

A220231

SPECIFICATIONS

UNIT SIZE		0451412	0701412	0701716	0901716
HEATING AND CAPACITY AND EFFICIENCY					
Input BTUh*	All Standard All Low NOx Upflow	44,000	66,000	66,000	88,000
	All Low NOx Downflow/ Horizontal	42,000	63,000	63,000	84,000
Output Capacity (BTUh)†	All Standard All Low NOx Upflow	36,000	54,000	54,000	71,000
	All Low NOx Downflow/ Horizontal	34,000	51,000	51,000	68,000
Certified Temperature Rise Range - °F (°C)		30 - 60 (17 - 33)	30 - 60 (17 - 33)	25 - 55 (14 - 31)	40 - 70 (22 - 39)
AFUE†		80	80	80	80
AIRFLOW CAPACITY AND BLOWER DATA					
Rated Certified External Static Pressure	Heating	0.1	0.12	0.12	0.15
	Cooling	0.5	0.5	0.5	0.5
Airflow CFM @ Rated ESP (CFM)‡	Heating	770	1090	1300	1220
	Cooling	185-1345	220-1340	245-1680	340-1480
Cooling Capacity (tons)	400 CFM/ton	3	3	4	3.5
	350 CFM/ton	3.5	3.5	4.5	4
Direct Drive Motor Type		Electronically Commutated Motor (ECM)			
Direct Drive Motor HP		1/2	1/2	3/4	1/2
Motor Full Load Amps		6.7	6.7	8.8	6.7
Heating Blower Control (Htg Off-Delay)		Adjustable: 90, 120, 150, 180 seconds			
Cooling Blower Control (Time Delay Relay)		90 seconds			
Blower Wheel Diameter x Width - In. (mm)		10 x 6	10 x 6	11 x 8	10 x 8
Air Filtration System		Field Supplied Filter			
Filter used for Certified Watt Data		325531-40**			
ELECTRICAL DATA					
Unit Volts-Hertz-Phase		115-60-1			
Operating Voltage Range	Min-Max	104-127			
Maximum Unit Amps		7.9	7.9	10.4	8.2
Unit Ampacity		10.7	10.7	13.8	11
Maximum Wire Length					
Measure 1 way in Ft	Feet	34	34	26	34
(M)	Meters	10.6	10.6	8.2	10.3
Minimum Wire Size	AWG	14	14	14	14
Max. Fuse/Ckt Bkr Size (Time-Delay Type Recommended)	Amps	15	15	15	15
Transformer Capacity (24 VAC output)		40VA			
External Control Power Available	Heating	12VA			
	Cooling	35VA			
GAS CONTROLS					
Burners		2	3	3	4
Gas Connection Size		1/2in. NPT			
Gas Valve (Redundant)	Mfr	WhiteRodgers™			
Min. inlet pressure	(in.w.c.)	4.5 (Natural Gas)			
Max. inlet pressure	(in.w.c.)	13.6 (Natural Gas)			
Ignition Device		Silicon Nitride			
Factory installed orifice		43	43	43	43
CONNECTIONS					
Communication System		None			
Thermostat Connections		G, C, W, Y/Y2, Y1, R, DHUM			
Accessory Connections		EAC-1 (115 VAC); HUM (24 VAC); 1-STG AC (via Y/Y2); 2-STG AC (via Y/Y2 and Y1)			

*. Gas input ratings are certified for elevations to 2000 ft. (610 M). In USA, For elevations above 2000 ft (610 M), reduce ratings 4 percent for each 1000 ft (305 M) above sea level. Refer to National Fuel Gas Code NFPA 54/ANSI Z223.1 Table F.4 or furnace installation instructions.

†. Capacity in accordance with U.S. Government DOE test procedures.

‡. Airflow shown is for bottom only return-air supply for the as-shipped speed tap. For air delivery above 1800 CFM, see Air Delivery table for other options. A filter is required for each return-air supply. An airflow reduction of up to 7 percent may occur when using the factory-specified 4-5/16-in. (110 mm) wide, high efficiency media filter.

**. See Accessory List for part numbers available.

UNIT SIZE		0902120	1102122	1352422
HEATING AND CAPACITY AND EFFICIENCY				
Input BTUh*	All Standard All Low NOx Upflow	88,000	110,000	132,000
	All Low NOx Downflow/ Horizontal	84,000	105,000	126,000
Output Capacity (BTUh)†	All Standard All Low NOx Upflow	71,000	90,000	107,000
	All Low NOx Downflow/ Horizontal	68,000	85,000	102,000
Certified Temperature Rise Range - °F (°C)		25 - 55 (14 - 31)	30 - 60 (17 - 33)	40 - 70 (22 - 39)
AFUE†		80	80	80
AIRFLOW CAPACITY AND BLOWER DATA				
Rated Certified External Static Pressure	Heating	0.15	0.2	0.2
	Cooling	0.5	0.5	0.5
Airflow CFM @ Rated ESP (CFM)‡	Heating	1690	1880	1930
	Cooling	330-2285	375-2345	340-2330
Cooling Capacity (tons)	400 CFM/ton	5	5	5
	350 CFM/ton	5.5	5.5	5.5
Direct Drive Motor Type		Electronically Commutated Motor (ECM)		
Direct Drive Motor HP		1	1	1
Motor Full Load Amps		11.5	11.5	11.5
Heating Blower Control (Htg Off-Delay)		Adjustable: 90, 120, 150, 180 seconds		
Cooling Blower Control (Time Delay Relay)		90 seconds		
Blower Wheel Diameter x Width - In. (mm)		11 x 11	11 x 11	11 x 11
Air Filtration System		Field Supplied Filter		
Filter used for Certified Watt Data		325531-40**		
ELECTRICAL DATA				
Unit Volts-Hertz-Phase		115-60-1		
Operating Voltage Range	Min-Max	104-127		
Maximum Unit Amps		13.9	14.4	14.4
Unit Ampacity		18.1	18.6	18.6
Maximum Wire Length				
Measure 1 way in Ft	Feet	31	30	30
(M)	Meters	9.6	9.4	9.4
Minimum Wire Size	AWG	12	12	12
Max. Fuse/Ckt Bkr Size (Time-Delay Type Recommended)	Amps	20	20	20
Transformer Capacity (24 VAC output)		40VA		
External Control Power Available	Heating	12VA		
	Cooling	35VA		
GAS CONTROLS				
Burners		4	5	6
Gas Connection Size		1/2in. NPT		
Gas Valve (Redundant)	Mfr	WhiteRodgers™		
Min. inlet pressure	(in.w.c.)	4.5 (Natural Gas)		
Max. inlet pressure	(in.w.c.)	13.6 (Natural Gas)		
Ignition Device		Silicon Nitride		
Factory installed orifice		43	43	43
CONNECTIONS				
Communication System		None		
Thermostat Connections		G, C, W, Y/Y2, Y1, R, DHUM		
Accessory Connections		EAC-1 (115 VAC); HUM (24 VAC); 1-STG AC (via Y/Y2); 2-STG AC (via Y/Y2 and Y1)		

*. Gas input ratings are certified for elevations to 2000 ft. (610 M). In USA, For elevations above 2000 ft (610 M), reduce ratings 4 percent for each 1000 ft (305 M) above sea level. Refer to National Fuel Gas Code NFPA 54/ANSI Z223.1 Table F.4 or furnace installation instructions.

†. Capacity in accordance with U.S. Government DOE test procedures.

‡. Airflow shown is for bottom only return-air supply for the as-shipped speed tap. For air delivery above 1800 CFM, see Air Delivery table for other options. A filter is required for each return-air supply. An airflow reduction of up to 7 percent may occur when using the factory-specified 4-5/16-in. (110 mm) wide, high efficiency media filter.

**. See Accessory List for part numbers available.

ICS = Isolated Combustion System

AIR DELIVERY (WITH FILTER)

Table 1 – Air Delivery - CFM (with filter)*

Unit Size	Airflow Setting	Default Setting	External Static Pressure (in. w.c.)									
			0.1	0.2	0.3	0.4	0.5	0.6	0.7	0.8	0.9	1
0451412	1	Cont. Fan	455	390	325	255	185	115	-	-	-	-
	2		500	440	380	320	255	185	120	-	-	-
	3		565	510	450	395	340	285	220	145	-	-
	4		600	550	495	440	390	340	285	225	145	-
	5		655	605	555	505	455	410	365	310	255	190
	6		720	675	630	585	535	490	450	405	360	310
	7	Heating	770	725	680	640	595	550	505	465	425	380
	8		795	755	715	670	630	585	540	500	460	425
	9		825	785	745	705	660	620	575	535	500	460
	10		880	840	800	765	725	685	645	605	565	530
	11		910	875	835	800	760	725	685	645	605	570
	12		935	900	865	830	795	755	720	685	645	610
	13	Low Cooling	985	950	915	885	850	815	780	745	710	675
	14		1015	980	950	920	885	850	820	785	750	715
	15		1045	1010	980	945	915	885	850	815	785	750
	16		1075	1045	1015	980	950	920	890	855	825	790
	17		1110	1080	1045	1015	985	955	925	895	860	830
	18		1160	1130	1100	1070	1040	1015	985	955	920	890
	19		1190	1160	1130	1100	1075	1045	1015	990	960	930
	20		1220	1190	1160	1135	1105	1075	1050	1020	990	960
	21		1250	1225	1195	1165	1140	1115	1085	1060	1030	1000
	22		1280	1255	1225	1200	1175	1145	1120	1095	1065	1040
	23	High Cooling	1325	1295	1270	1245	1220	1190	1165	1140	1115	1085
	24		1400	1375	1350	1325	1300	1275	1250	1225	1180	1095
	25		1485	1460	1420	1380	1345	1305	1260	1225	1180	1100
0701412	1	Cont. Fan	480	420	355	285	220	160	115	-	-	-
	2		525	470	410	340	280	225	170	-	-	-
	3		565	510	455	395	340	275	225	175	135	-
	4		620	570	520	465	410	360	300	250	205	160
	5		650	605	560	510	460	405	355	300	250	210
	6		700	655	615	565	520	470	420	375	325	275
	7		715	675	630	585	540	495	440	395	345	300
	8		760	720	680	640	595	550	505	455	410	365
	9		815	780	740	700	660	620	580	535	490	450
	10		870	830	795	760	725	685	645	605	565	525
	11		920	885	850	815	780	745	710	675	635	595
	12		980	950	915	885	850	815	780	745	710	675
	13	Low Cooling	1035	1005	975	940	910	880	850	815	780	750
	14		1070	1040	1010	980	945	915	885	855	820	790
	15	Heating	1100	1070	1040	1010	980	950	920	890	860	830
	16		1130	1100	1070	1045	1015	985	955	925	895	865
	17		1160	1130	1105	1075	1045	1020	990	960	930	900
	18		1190	1160	1135	1105	1080	1050	1025	995	965	940
	19		1220	1190	1165	1135	1110	1080	1055	1025	1000	970
	20		1250	1225	1200	1170	1145	1115	1090	1065	1035	1010
	21		1285	1255	1230	1205	1180	1150	1125	1100	1070	1045
	22		1315	1290	1265	1235	1210	1185	1160	1135	1110	1085
	23	High Cooling	1345	1320	1295	1270	1245	1215	1190	1165	1140	1115
	24		1385	1360	1335	1310	1285	1260	1235	1215	1180	1140
	25		1470	1445	1415	1375	1340	1300	1260	1225	1180	1140

Manufacturer reserves the right to change, at any time, specifications and designs without notice and without obligations.

Table 1 – Air Delivery - CFM (with filter)* (Continued)

Unit Size	Airflow Setting	Default Setting	External Static Pressure (in. w.c.)									
			0.1	0.2	0.3	0.4	0.5	0.6	0.7	0.8	0.9	1
0701716	1	Cont. Fan	560	480	395	315	245	165	-	-	-	-
	2		615	540	465	385	320	255	175	-	-	-
	3		670	600	530	460	385	325	265	190	-	-
	4		745	680	615	550	485	415	360	305	245	165
	5		810	750	690	630	570	505	445	395	340	285
	6		875	815	760	705	645	590	530	470	420	375
	7		955	900	845	795	740	685	630	580	525	470
	8		1025	970	920	870	825	775	725	675	625	575
	9		1090	1045	995	945	900	855	805	760	715	665
	10		1170	1125	1080	1035	990	950	905	860	815	775
	11		1215	1170	1125	1080	1040	995	950	910	870	825
	12		1260	1220	1175	1135	1095	1055	1010	970	930	890
	13	Heating	1310	1270	1230	1190	1150	1110	1070	1030	990	955
	14	Low Cooling	1345	1305	1265	1225	1190	1150	1110	1070	1035	995
	15		1385	1345	1305	1265	1225	1185	1150	1110	1075	1040
	16		1420	1380	1345	1305	1270	1230	1195	1155	1120	1085
	17		1460	1420	1385	1345	1310	1275	1235	1205	1165	1135
	18		1495	1460	1425	1385	1350	1315	1280	1245	1210	1180
	19		1535	1500	1460	1425	1395	1355	1320	1290	1255	1225
	20		1575	1540	1505	1475	1440	1405	1370	1340	1305	1275
	21		1620	1585	1550	1515	1485	1450	1420	1390	1360	1330
	22		1655	1620	1585	1555	1525	1490	1460	1430	1400	1370
	23		1690	1655	1625	1595	1565	1535	1500	1475	1445	1420
	24		1750	1720	1690	1660	1630	1600	1570	1540	1500	1460
	25	High Cooling	1825	1795	1760	1720	1680	1635	1595	1555	1510	1470
0901716	1	Cont. Fan	660	580	480	410	340	265	210	150	-	-
	2		700	625	525	455	395	320	255	205	145	-
	3		750	685	585	520	460	395	325	270	220	165
	4		805	740	670	580	520	465	405	335	280	235
	5		855	795	730	640	580	520	465	405	345	295
	6		900	845	785	695	635	580	525	470	410	355
	7		945	890	835	770	685	630	575	530	475	415
	8		975	925	865	810	725	665	615	565	515	460
	9		1015	965	915	860	775	715	665	615	570	520
	10		1070	1020	970	920	865	785	730	680	630	590
	11		1130	1085	1040	990	945	865	805	755	710	665
	12		1170	1125	1080	1030	985	930	855	805	760	710
	13	Low Cooling	1200	1155	1115	1070	1020	975	900	845	800	755
	14	Heating	1240	1200	1160	1115	1070	1025	980	905	855	810
	15		1260	1220	1180	1140	1095	1050	1005	935	880	840
	16		1295	1255	1215	1175	1130	1090	1045	980	925	880
	17		1325	1285	1250	1210	1170	1125	1085	1035	965	920
	18		1360	1325	1285	1245	1210	1165	1125	1085	1015	960
	19		1395	1360	1320	1285	1245	1205	1165	1125	1075	1010
	20		1430	1390	1355	1320	1285	1245	1205	1165	1125	1060
	21		1460	1425	1390	1355	1320	1280	1245	1205	1165	1115
	22		1500	1465	1430	1395	1360	1320	1285	1245	1210	1170
	23		1535	1500	1465	1430	1400	1360	1325	1290	1255	1215
	24		1575	1540	1505	1475	1440	1405	1370	1335	1285	1225
	25	High Cooling	1615	1580	1545	1515	1480	1450	1410	1350	1285	1225

Manufacturer reserves the right to change, at any time, specifications and designs without notice and without obligations.

Table 1 – Air Delivery - CFM (with filter)* (Continued)

Unit Size	Airflow Setting	Default Setting	External Static Pressure (in. w.c.)									
			0.1	0.2	0.3	0.4	0.5	0.6	0.7	0.8	0.9	1
0902120	1	Cont. Fan	780	660	545	440	330	210	-	-	-	-
	2		860	740	645	535	440	340	220	-	-	-
	3		930	820	725	625	530	440	350	230	-	-
	4		1030	930	835	755	655	570	485	400	310	185
	5		1125	1035	935	860	785	690	610	530	450	370
	6		1210	1125	1035	955	880	805	725	645	570	495
	7		1285	1210	1125	1040	975	905	830	750	675	610
	8		1385	1310	1235	1150	1085	1020	955	885	815	745
	9		1475	1410	1340	1265	1190	1130	1065	1010	940	875
	10		1565	1500	1435	1365	1290	1230	1175	1115	1060	995
	11		1670	1605	1550	1485	1415	1350	1295	1240	1180	1130
	12	Heating/Low Cooling	1720	1660	1605	1540	1475	1410	1350	1300	1245	1195
	13		1765	1710	1655	1595	1530	1465	1405	1355	1305	1255
	14		1815	1760	1705	1650	1585	1525	1460	1410	1360	1310
	15		1860	1805	1755	1700	1640	1580	1515	1465	1415	1370
	16		1915	1865	1815	1760	1705	1645	1585	1530	1480	1435
	17		1970	1915	1865	1815	1760	1705	1645	1590	1540	1495
	18		2020	1965	1920	1870	1820	1765	1710	1650	1605	1560
	19		2070	2025	1975	1930	1880	1830	1775	1720	1670	1625
	20		2120	2075	2030	1985	1935	1885	1835	1785	1730	1685
	21		2170	2125	2080	2035	1990	1945	1895	1845	1795	1750
	22		2220	2175	2130	2090	2045	2000	1955	1910	1860	1815
	23	High Cooling	2270	2225	2185	2145	2100	2055	2015	1970	1920	1875
	24		2355	2315	2275	2240	2200	2160	2115	2075	2020	1965
	25		2470	2425	2385	2335	2285	2230	2175	2115	2050	1985
1102122	1	Cont. Fan	815	690	580	475	375	285	190	-	-	-
	2		890	780	670	570	475	385	300	215	135	-
	3		1000	900	800	700	615	525	440	360	285	210
	4		1100	1005	910	820	735	650	570	490	415	350
	5		1190	1105	1015	930	840	765	685	610	535	465
	6		1280	1195	1110	1025	945	865	795	725	645	575
	7		1385	1305	1225	1150	1070	995	920	860	790	720
	8		1480	1405	1335	1260	1190	1120	1045	975	920	850
	9		1575	1505	1435	1365	1295	1230	1165	1095	1030	975
	10		1685	1620	1555	1485	1420	1360	1295	1230	1165	1105
	11	Low Cooling	1785	1725	1660	1600	1535	1475	1415	1355	1300	1235
	12		1880	1825	1765	1705	1645	1590	1530	1470	1415	1365
	13	Heating	1935	1880	1825	1765	1710	1650	1595	1545	1490	1435
	14		1995	1940	1885	1825	1770	1715	1660	1605	1555	1505
	15		2010	1960	1905	1850	1790	1740	1685	1630	1580	1530
	16		2060	2005	1950	1900	1840	1790	1735	1685	1635	1585
	17		2095	2045	1990	1940	1885	1835	1780	1730	1680	1635
	18		2140	2090	2040	1990	1935	1885	1835	1790	1740	1695
	19		2190	2145	2095	2045	1995	1940	1895	1850	1805	1755
	20		2250	2205	2155	2105	2055	2010	1960	1915	1870	1830
	21	High Cooling	2305	2260	2215	2165	2120	2075	2030	1985	1940	1900
	22		2355	2305	2260	2220	2175	2130	2085	2040	2000	1960
	23		2400	2355	2315	2270	2230	2185	2145	2100	2060	2015
	24		2460	2420	2375	2335	2290	2250	2205	2150	2100	2045
	25		2515	2470	2430	2385	2345	2290	2230	2170	2110	2050

Manufacturer reserves the right to change, at any time, specifications and designs without notice and without obligations.

Table 1 – Air Delivery - CFM (with filter)* (Continued)

Unit Size	Airflow Setting	Default Setting	External Static Pressure (in. w.c.)									
			0.1	0.2	0.3	0.4	0.5	0.6	0.7	0.8	0.9	1
1352422	1	Cont. Fan	805	675	575	445	340	230	115	-	-	-
	2		875	765	660	555	440	340	230	120	-	-
	3		950	840	740	650	540	440	435	290	175	125
	4		1045	945	850	765	675	560	475	385	295	195
	5		1135	1045	950	865	785	700	595	515	430	350
	6		1220	1135	1045	960	885	810	725	630	550	475
	7		1320	1245	1165	1080	1010	940	865	790	690	620
	8		1415	1345	1270	1190	1120	1055	990	920	845	755
	9		1535	1465	1395	1325	1250	1185	1125	1065	1000	930
	10		1615	1555	1485	1420	1350	1285	1225	1170	1110	1050
	11	Low Cooling	1715	1660	1600	1535	1470	1400	1345	1290	1235	1180
	12		1770	1710	1650	1590	1525	1460	1400	1350	1295	1240
	13		1815	1760	1700	1640	1580	1515	1455	1405	1355	1300
	14		1860	1805	1750	1690	1630	1570	1510	1455	1405	1360
	15		1925	1870	1815	1760	1705	1645	1585	1530	1475	1430
	16	Heating	1980	1930	1875	1820	1765	1705	1650	1595	1545	1495
	17		2035	1980	1930	1875	1825	1770	1710	1655	1605	1560
	18		2085	2035	1985	1935	1880	1825	1775	1720	1670	1625
	19		2135	2090	2040	1990	1940	1885	1835	1785	1730	1685
	20		2185	2140	2090	2040	1995	1945	1895	1845	1795	1750
	21		2235	2190	2145	2095	2050	2000	1955	1905	1855	1810
	22	High Cooling	2285	2240	2195	2150	2105	2060	2010	1965	1920	1875
	23		2335	2290	2245	2200	2155	2115	2070	2025	1980	1935
	24		2415	2370	2330	2285	2245	2205	2160	2115	2065	2010
	25		2505	2460	2420	2380	2330	2275	2215	2155	2090	2020

NOTE:

1. A filter is required for each return-air inlet. Airflow performance included 3/4-in. (19 mm) washable filter media such as contained in a factory - authorized accessory filter rack. See accessory list. To determine airflow performance without this filter, assume an additional 0.1-in. w.c. available external static pressure.
2. **Adjust the blower airflow setting as necessary for the proper air temperature rise for each installation.**
3. Airflows over 1800 CFM require bottom return, two-side return, or bottom and side return. A minimum filter size of 20” x 25” (508 x 635 mm) is required.
4. For upflow applications, air entering from one side into both the side of the furnace and a return air base counts as a side and bottom return
5. The - entry indicates unstable operating conditions

Table 2 – Default Airflow Settings

	Default Airflow Settings*			Designated Airflow Settings	
Unit Size	Heating	High Cooling	Low Cooling	Heating	Constant Fan
0451412	7	23	13	(3 - 11)	(1 - 9)
0701412	15	23	13	(10 - 19)	(1 - 9)
0701716	13	25	14	(7 - 15)	(1 - 4)
0901716	14	25	13	(8 - 21)	(1 - 10)
0902120	12	23	12	(7 - 17)	(1 - 9)
1102122	13	21	11	(8 - 18)	(1 - 9)
1352422	16	22	11	(9 - 19)	(1 - 8)

*. Setting #1 is the default setting for Constant Fan

TYPICAL WIRING SCHEMATIC

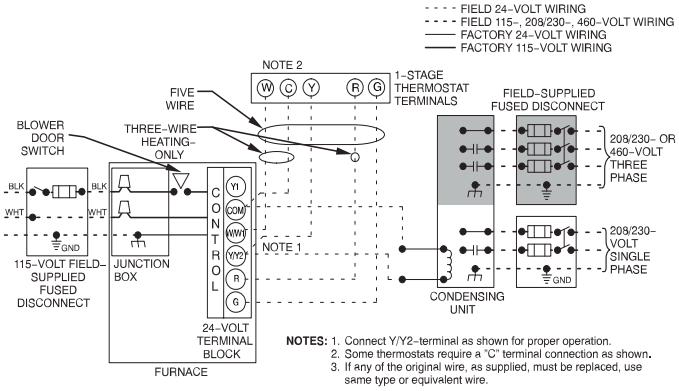

FURNACE CONTROL BOARD

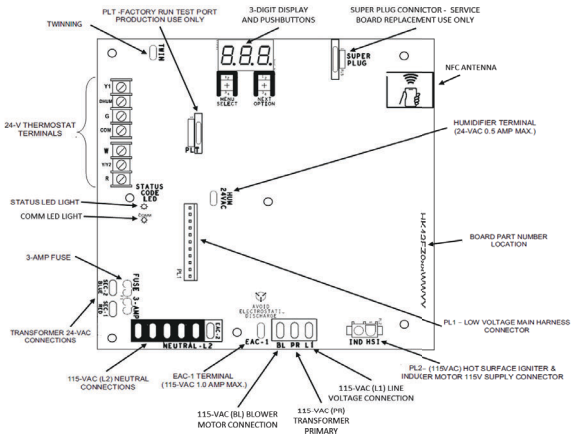

VENTING CONFIGURATIONS

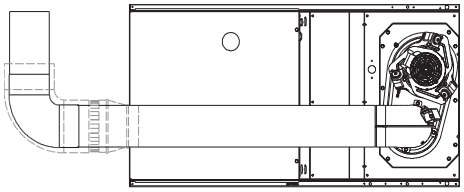

SEE NOTES: 1, 2, 4, 5, 7, 8, 9

HORIZONTAL RIGHT

A02068

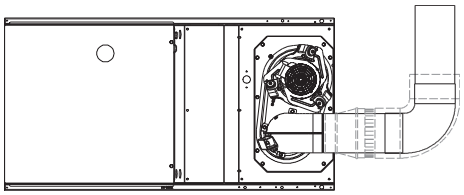

SEE NOTES: 1, 2, 4, 7, 8, 9

HORIZONTAL RIGHT

A02069

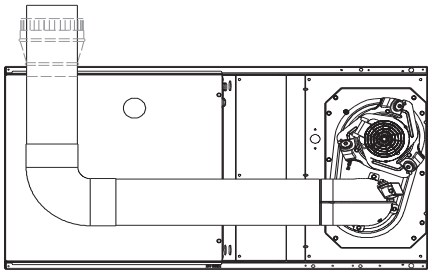

SEE NOTES: 1, 2, 4, 5, 7, 8, 9

HORIZONTAL RIGHT

A02070

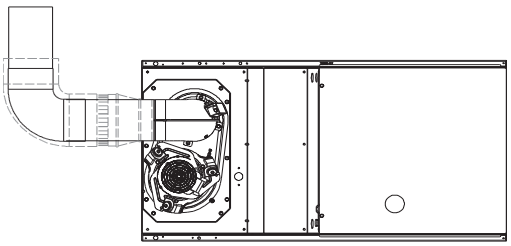

SEE NOTES: 1, 2, 4, 7, 8, 9

HORIZONTAL LEFT

A02064

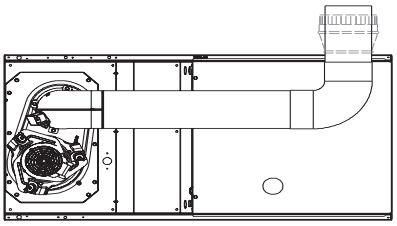

SEE NOTES: 1, 2, 4, 5, 7, 8, 9

HORIZONTAL LEFT

A02065

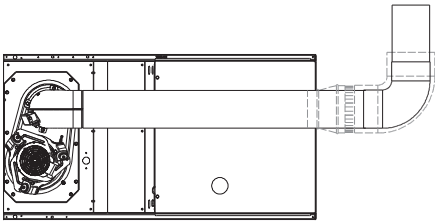

SEE NOTES: 1, 2, 4, 5, 7, 8, 9

HORIZONTAL LEFT

A02067

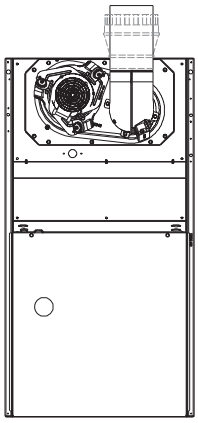

SEE NOTES: 1, 2, 4, 7, 8, 9

UPFLOW

A02058

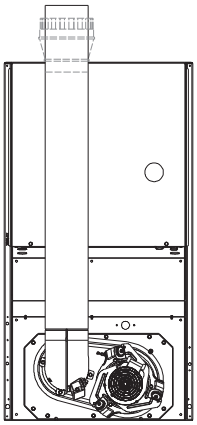

SEE NOTES: 1, 2, 4, 5, 7, 8, 9

DOWNFLOW

A02061

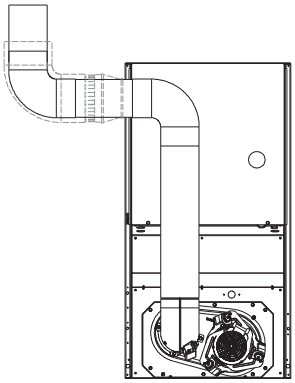

SEE NOTES: 1, 2, 3, 4, 5, 7, 8, 9

DOWNFLOW

A02060

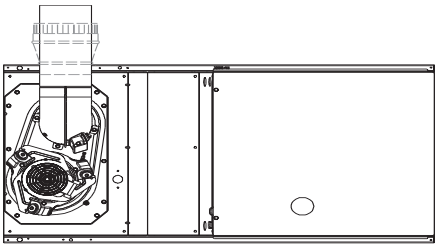

SEE NOTES: 1, 2, 4, 5, 7, 8, 9

HORIZONTAL LEFT

A02066

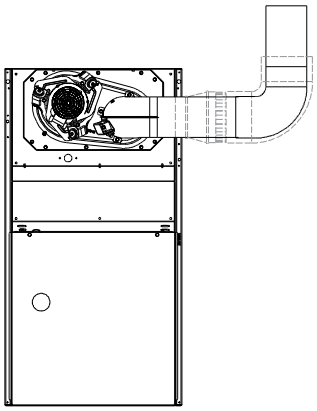

SEE NOTES: 1,2,3,4,7,8,9

UPFLOW

A02059

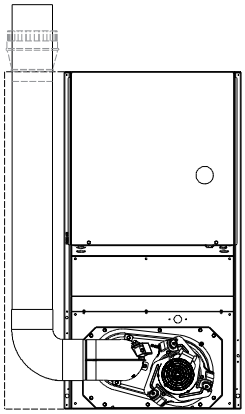

SEE NOTES: 1,2,4,5,6,7,8,9

DOWNFLOW

A02062

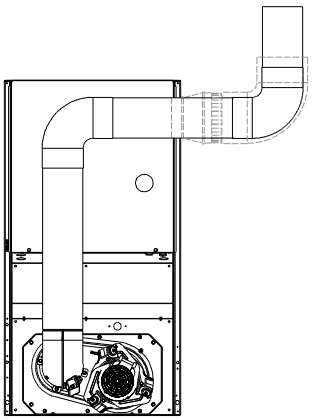

SEE NOTES: 1,2,3,4,7,8,9

DOWNFLOW

A02063

Venting notes

1. For common vent, vent connector sizing and vent material: United States, latest edition of the National Fuel Gas Code (NFGC), ANSI Z223.1/NFPA 54.
2. Immediately increase to 5-in. (127 mm) vent connector outside furnace casing when 5-in. (127 mm) vent connector required, refer to Note 1.
3. Side outlet vent for upflow and downflow installations must use Type B vent immediately after exiting the furnace, except when Downflow Vent Guard is used in downflow position.
4. Type B vent where required, refer to Note 1.
5. 4-in. (102 mm) single wall vent must be used inside furnace casing and the Downflow Vent Guard Kit.
6. Accessory Downflow Vent Guard Kit required in downflow installations with bottom vent configuration.
7. Chimney Adapter Kit required for exterior masonry chimney applications. Refer to Chimney Adapter Kits for sizing and complete application details.
8. Secure vent connector to furnace elbow with (2) corrosion-resistant sheet metal screws, space approximately 180 apart.
9. Secure all other single wall vent connector joints with (3) corrosion-resistant screws spaced approximately 120 apart. Secure Type B vent connectors per vent connector manufacturer's recommendations.

ACCESSORIES

PART NO.	DESCRIPTION	0451412	0701412	0701716	0901716	0902120	1102122	1352422
ACG1425NCB*	External Filter Rack, 14-1/2 x 25”	X	X	X	-	-	-	-
ACG1625NCF*	External Filter Rack, 16 x 25”	-	-	-	X	-	-	X
ACG2025NCJ*	External Filter Rack, 20 x 25”	-	-	-	-	X	X	-
ACG2424NCL*	External Filter Rack, 24-1/2 x 24”	-	-	-	-	-	-	X
325531-402*	Washable filter, 3/4” x 16” x 25”	X	X	X	X	-	-	X
325531-403*	Washable filter, 3/4” x 21” x 25”	-	-	-	-	X	X	-
325531-404*	Washable filter, 3/4” x 24” x 25”	-	-	-	-	-	-	X
NAHB00101CA	Coil Adapter Kits - No Offset	X	X	X	X	X	X	X
NAHB00201CA	Coil Adapter Kits - Single Offset	X	X	X	X	X	X	X
NAHB00301CA	Coil Adapter Kits - Double Offset	X	X	X	X	X	X	X
NAHA01401RA	Return Air Base (Upflow Applications) 14-3/16” wide	X	X	X	-	-	-	-
NAHA01701RA	Return Air Base (Upflow Applications) 17-1/2” wide	-	-	-	X	-	-	X
NAHA02101RA	Return Air Base (Upflow Applications) 21” wide	-	-	-	-	X	X	-
NAHA02401RA	Return Air Base (Upflow Applications) 24-1/2 wide	-	-	-	-	-	-	X
NAHA00401DH	Chimney Adapter Kit, up to or equal to 110K BTUh	X	X	X	X	X	X	-
NAHA00301DH	Chimney Adapter Kit, up to or equal to 135K BTUh	-	-	-	-	-	-	X
NAHA01101SB	Combustible Floor Base (Not required when evaporator coil case is used for downflow)	X	X	X	X	X	X	X
NAHB00301VC	Downflow Vent Guard (Not required when vent is routed through cabinet)	X	X	X	X	X	X	X
AGAGC8NPS01C*	Natural-to-Propane Conversion Kit†	X	X	X	X	X	X	X
AGAGC8PNS01C*	Propane-to-Natural Conversion Kit†	X	X	X	X	X	X	X
AGATWNPUA01A	Twinning Kit	-	-	X	X	X	X	X

*. Purchased through FAST Parts.
†. Factory-authorized and field installed. Fuel conversion kits are CSA recognized.
X = Accessory

ORIFICES

Part Number	Gas Type	Orifice Size
1185612	Natural	42
1176928	Natural	43
1185574	Natural	44
1177213	Natural	45

Part Number	Gas Type	Orifice Size
1183809	Natural	46
1185613	Natural	47
1185614	Natural	48

Part Number	Gas Type	Orifice Size
1184256	Propane	54
1185615	Propane	55
1185616	Propane	56
1185617	Propane	1.25 mm
1185618	Propane	1.30 mm

© 2025 Carrier. All rights reserved.
Edition Date: 01/25
Catalog No: N80VSL2-21-02PD
A Proud Member of the Carrier Family www.GoTempstar.com
Replaces: N80VSL2-21-01
Manufacturer reserves the right to change, at any time, specifications and designs without notice and without obligations.