Installation Instructions

N9MP1
N9MP2
*9MPD

Four Position Condensing Gas Furnace

SAFETY REQUIREMENTS

Recognize safety information. This is the safety-alert symbol ⚠. When you see this symbol on the furnace and in instructions or manuals be alert to the potential for personal injury.

Understand the signal words *DANGER, WARNING,* or *CAUTION.* These words are used with the safety-alert symbol. *DANGER* identifies the most serious hazards, those that **will** result in severe personal injury or death. *WARNING* signifies a hazard that **could** result in personal injury or death. *CAUTION* is used to identify unsafe practices that **could** result in minor personal injury or product and property damage.

Installing and servicing heating equipment can be hazardous due to gas and electrical components. Only trained and qualified personnel should install, repair, or service heating equipment.

Untrained service personnel can perform basic maintenance functions such as cleaning and replacing air filters. All other operations must be performed by trained service personnel. When working on heating equipment, observe precautions in the literature, on tags, and on labels attached to or shipped with the unit and other safety precautions that may apply.

Follow all safety codes. In the United States, follow all safety codes including the current edition National Fuel Gas Code (NFGC) NFPA No. 54/ANSIZ223.1. In Canada, refer to the current edition of the National Standard Canada CAN/CGA-B149.1- and .2-M91 Natural Gas and Propane Installation Codes (NSCNGPIC). Wear safety glasses and work gloves. Have fire extinguisher available during start-up and adjustment procedures and service calls.

These instructions cover minimum requirements and conform to existing national standards and safety codes. In some instances, these instructions exceed certain local codes and ordinances, especially those that may not have kept up with changing residential construction practices. We requre these instructions as a minimum for a safe installation.

DESIGN CERTIFIED

EFFICIENCY RATING CERTIFIED gama

CERTIFIED

Manufactured by:

International Comfort Products Corporation (USA)
Lewisburg, TN USA 37091

Table of Contents

1. Safe Installation Requirements 4
2. Installation 5
3. Combustion & Ventilation Air 8
4. Vent & Combustion Air Piping 10
5. Gas Supply and Piping 26
6. Electrical Wiring 30
7. Ductwork and Filter (Upflow/Horizontal) 31
8. Checks and Adjustments 35
9. Furnace Maintenance 37
10. Sequence of Operation & Diagnostics 37
11. Concentric Vent Termination 42

⚠ DANGER

Electric Shock Hazard.

Turn Off All Power Before Servicing.

Failure to do so can result in death, personal injury and/or property damage.

⚠ WARNING

Fire or Explosion hazard.

This furnace is not designed for use in mobile homes, trailers or recreational vehicles.

Such use could result in death, bodily injury and/or property damage.

N9MP1 - Indoor combustion air (1 pipe only)
N9MP2 - Direct Vent ONLY (2 pipe only)
*9MPD - Dual Certified Venting (1 or 2 pipes)
*Denotes Brand

MODEL NUMBER IDENTIFICATION GUIDE

*	9	M P	D	0 75	F	1 2	A	#

Brand

Brand Identifier
8 = Non-Condensing, 80+% Gas Furnace
9 = Condensing, 90+% Gas Furnace

Installation Configuration
UP = Upflow
DN = Downflow
UH = Upflow/Horizontal
HZ = Horizontal
DH = Downflow/Horizontal
MP = Multiposition, Upflow/Downflow/Horizontal

Major Design Feature

1 = One (Single) Pipe	N = Single Stage
2 = Two Pipe	P = PVC Vent
D = 1 or 2 Pipe	T = Two Stage
L = Low NOx	V = Variable Speed

Engineering Rev.
Denotes minor changes

Marketing Digit
Denotes minor change

Cooling Airflow
08 = 800 CFM
12 = 1200 CFM
14 = 1400 CFM
16 = 1600 CFM
20 = 2000 CFM

Cabinet Width
B = 15.5″ Wide
F = 19.1″ Wide
J = 22.8″ Wide
L = 24.5″ Wide

Input (Nominal MBTUH)

* Denotes Brand

START-UP CHECK SHEET
For 90+ Furnace

(Keep this page for future reference)

Dealer Name:_____

Address:_____

City, State(Province), Zip or Postal Code:_____

_____

Phone:_____

Owner Name:_____

Address:_____

City, State(Province), Zip or Postal Code:_____

_____

Model Number:_____

Serial Number:_____

Type of Gas: Natural: ❑ LP: ❑

Which blower speed tap is used?
(Heating)_____ (Cooling)_____

Temperature of Supply Air: (°F)_____or(°C)_____

Temperature of Return Air: (°F)_____or(°C)_____

Rise (Supply Temp.-Return Temp.): (°F)____or(°C)_____

Filter Type and Size:_____

Fan "Time **ON**" Setting:_____

Fan "Time **OFF**" Setting:_____

Business Card Here

Manual Gas Shut-Off Upstream of Furnace/Drip-Leg? YES ❑ NO ❑

Condensate Drain Connected? YES ❑ NO ❑

Condensate Drain Trapped? YES ❑ NO ❑

Transition Pressure switch hose relocated for U/D/H Application? YES ❑ NO ❑

Blower Speed Checked? YES ❑ NO ❑

All Electrical Connections Tight? YES ❑ NO ❑

Gas Valve OK? YES ❑ NO ❑

Measured Line Pressure When Firing Unit:_____

Calculated Firing Rate:(See *Checks and Adjustments* Section).

Temperature Rise (supply-return temperature):(°F)_____

Measured Manifold Gas Pressure:_____

Static Pressure (Ducts): Supply Air____ Return _____

Date of Start-Up:_____

CO ? _____

CO2 ? _____

Dealer Comments:_____

_____

_____

_____

⚠ WARNING

Installation or repairs made by unqualified persons can result in hazards to you and others. Installation MUST conform with local codes or, in the absence of local codes, with codes of all governmental authorities having jurisdiction.

The information contained in this manual is intended for use by a qualified service technician who is experienced in such work, who is familiar with all precautions and safety procedures required in such work and is equipped with the proper tools and test instruments.

Failure to carefully read and follow all instructions in this manual can result in furnace malfunction, death, personal injury and/or property damage.

NOTE: This furnace is design certified by the Canadian Standards Association (CSA) for installation in the United States and Canada. Refer to the appropriate codes, along with **Figure 1** or **Figure 2** and this manual, for proper installation.

- **This furnace is NOT approved for installation in mobile homes, trailers or recreation vehicles.**
- Do **NOT** use this furnace as a construction heater or to heat a building that is under construction.
- Use only the Type of gas approved for this furnace (see **Rating Plate** on unit). Overfiring will result in failure of heat exchanger and cause dangerous operation. (Furnaces can be converted to L.P. gas with approved kit.)
- Do **NOT** use open flame to test for gas leak.
- Ensure adequate combustion and ventilation air is provided to the furnace.
- Seal around supply and return air ducts.
- The vent system **MUST** be checked to determine that it is the correct type and size.
- Install correct filter type and size.
- Unit **MUST** be installed so electrical components are protected from direct contact with water.

NOTE: It is the personal responsibility and obligation of the end user to contact a qualified installer to ensure that the installation is adequate and conforms to governing codes and ordinances.

Safety Rules

Your unit is built to provide many years of safe and dependable service provided it is properly installed and maintained. However, abuse and/or improper use can shorten the life of the unit and create hazards for you, the owner.

A. The U.S. Consumer Product Safety Commission recommends that users of gas-burning appliances install carbon monoxide detectors. There can be various sources of carbon monoxide in a building or dwelling. The sources could be gas-fired clothes dryers, gas cooking stoves, water heaters, furnaces, gas-fired fireplaces, wood fireplaces, and several other items. Carbon monoxide can cause serious bodily injury and/or death. Therefore, to help alert people of potentially dangerous carbon monoxide levels, you should have carbon monoxide detectors listed by a nationally recognized agency (e.g. Underwriters Laboratories or CSA International) installed and maintained in the building or dwelling (see Note below).

   Carbon monoxide or “CO” is a colorless and odorless gas produced when fuel is not burned completely or when the flame does not receive sufficient oxygen.

B. There can be numerous sources of fire or smoke in a building or dwelling. Fire or smoke can cause serious bodily injury, death, and/or property damage. Therefore, in order to alert people of potentially dangerous fire or smoke, you should have fire and smoke detectors listed by Underwriters Laboratories installed and maintained in the building or dwelling (see Note below).

Note: The manufacturer of your furnace does not test any detectors and makes no representations regarding any brand or type of detector.

C. To ensure safe and efficient operation of your unit, you should do the the following:

1. **Thoroughly read this manual and labels on the unit.** This will help you understand how your unit operates and the hazards involved with gas and electricity.
2. **Do not use this unit if any part has been under water.** Immediately call a qualified service technician to inspect the unit and to replace any part of the control system and any gas control which has been under water.
3. **Never obstruct the vent grilles, or any ducts that provide air to the unit.** Air must be provided for proper combustion and ventilation of flue gases.

Freezing Temperatures and Your Structure

⚠ WARNING

Freeze warning.

Turn off water system.

If your unit remains shut off during cold weather the water pipes could freeze and burst, resulting in serious water damage.

Your unit is equipped with safety devices that may keep it from operating if sensors detect abnormal conditions such as clogged exhaust flues.

If your unit remains shut off during cold weather the water pipes could freeze and burst, resulting in serious water damage.

If the structure will be unattended during cold weather you should take these precautions.

1. Turn off main supply water into the structure and drain the water lines if possible. Open faucets in appropriate areas.
2. Have someone check the structure frequently during cold weather to make sure it is warm enough to prevent pipes from freezing. Suggest they call qualified service agency, if required.

Winter Shutdown

If you go away during the winter months and do not leave the heat on in your home, the plastic transition box and the condensate

trap on the furnace must be protected from freeze damage.**(See Figure 8** trough **Figure 17)**

1. Disconnect the $^5/_8$″ OD rubber hose from the vent drain fitting that is located downstream of the combustion blower. Insert a funnel into the hose and pour four(4) ounces of sanitary type (RV) antifreeze into the condensate trap. Reconnect the $^5/_8$″ OD rubber hose to the stub on the vent drain fitting. Secure with the hose clamp.
2. Disconnect the $^3/_4$″ OD rubber hose from the condensate trap. Insert a funnel into the hose and and pour four(4) ounces of sanitary type (RV) antifreeze into the plastic Transition box. Squeeze the hose together near the end and quickly reconnect the $^3/_4$″ OD rubber hose to the stub on the condensate trap. Secure with the hose clamp.

When you return home, your furnace will be ready to start, as it is not necessary to drain the antifreeze from the furnace.

2. Installation

⚠ WARNING

Poison carbon monoxide gas Hazard.

This furnace can NOT be common vented or connected to any type B, BW or L vent or vent connector, nor to any portion of a factory-built or masonry chimney. If this furnace is replacing a previously common-vented furnace, it may be necessary to resize the existing vent and chimney to prevent oversizing problems for the other remaining appliance(s). See *Venting and Combustion Air Check* in *Gas Vent Installation* section. This furnace MUST be vented to the outside.

Failure to properly vent this furnace or other appliances can result in death, personal injury and/or property damage.

Location and Clearances

1. Refer to **Figure 1** or **Figure 2** for typical installation and basic connecting parts required. Refer to **Figure 4** for typical horizontal direct vent installation and basic connecting parts required. Supply and return air plenums and duct are also required.
2. If furnace is a replacement, it is usually best to install the furnace where the old one was. Choose the location or evaluate the existing location based upon the minimum clearance and furnace dimensions (**Figure 3**).

CAUTION

Special precautions MUST be made if installing furnace in an area which may drop below freezing. This can cause improper operation or damage to equipment. If furnace environment has the potential of freezing, the drain trap and drainline must be protected. The use of electric heat tape or RV antifreeze is recommended for these installations. (See *"Condensate Trap Freeze Protection Section")*

Do NOT operate furnace in a corrosive atmosphere containing chlorine, fluorine or any other damaging chemicals. Refer to *Combustion & Ventilation Air section, Contaminated Combustion Air.*

Figure 1 — **Typical Upflow Installation**

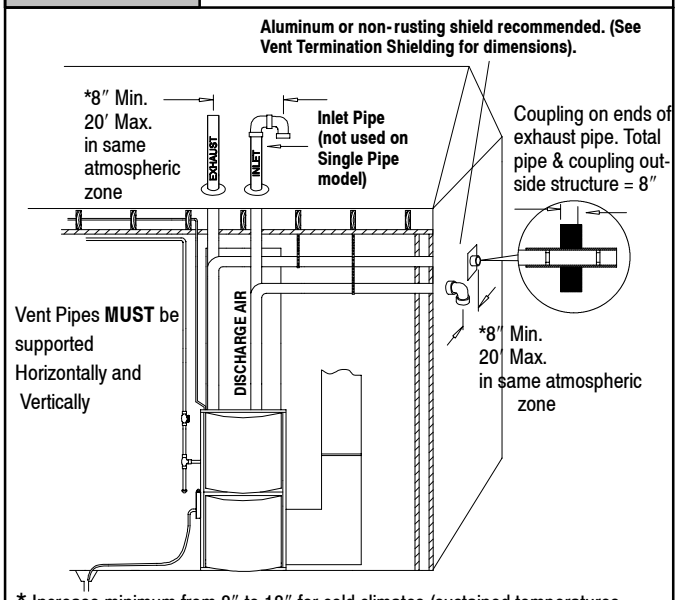

* Increase minimum from 8″ to 18″ for cold climates (sustained temperatures below 0 ° F).

25-23-33

Figure 2 — **Typical Downflow Installation**

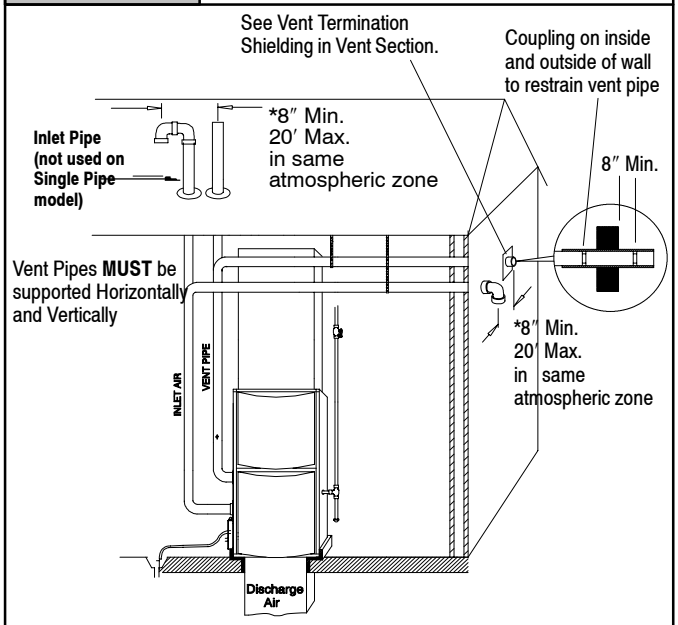

* Increase minimum from 8″ to 18″ for cold climates (sustained temperatures below 0°F).

25-23-33a

Figure 3 Dimensions & Clearances

Cabinet to Combustible Clearances						
TOP	BOT.	RH	LH	BACK	FRONT	FLUE
1″	0″	0″	0″	0″	3″	0″

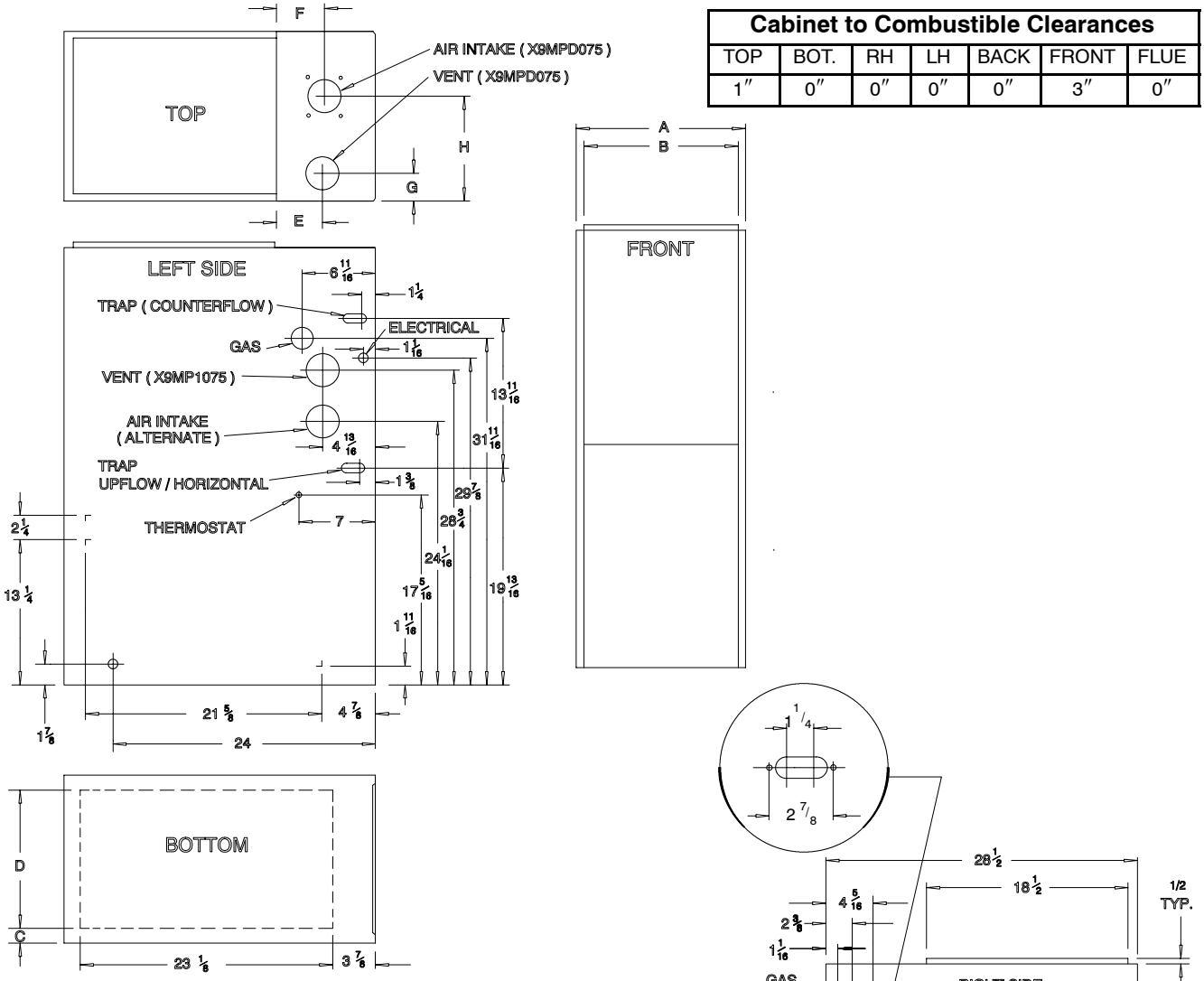

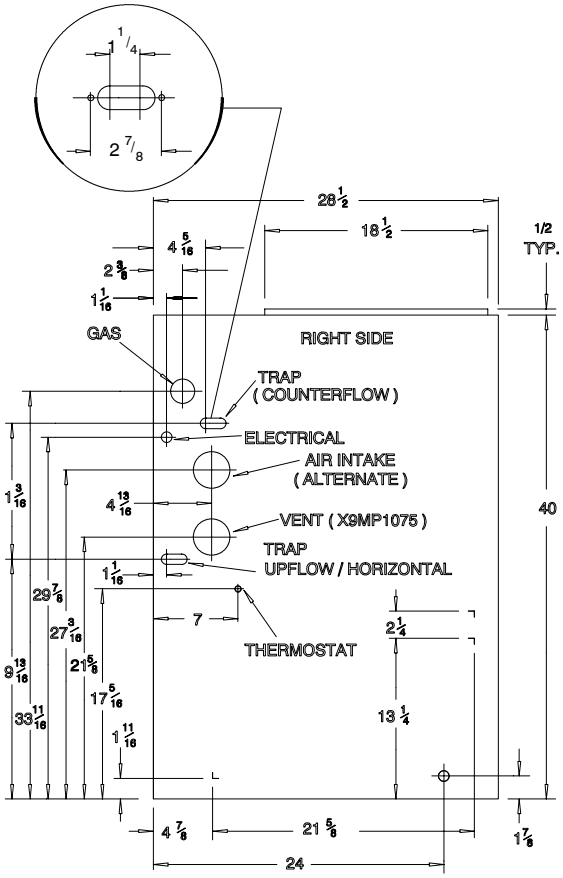

Unit Capacity	Cabinet		Bottom	Top			
	A	B	D	E	F	G	H
N9MP1050B12A	15 1/2	14	12 5/8	--	--	--	--
N9MP1075B12A	15 1/2	14	12 5/8	--	--	--	--
N9MP1080F16A	19 1/8	17 5/8	14 3/4	--	--	--	--
N9MP1100F14A	19 1/8	17 5/8	14 3/4	--	--	--	--
N9MP1100J20A	22 3/4	21 1/4	18 3/4	--	--	--	--
N9MP1125J20A	22 3/4	21 1/4	18 3/4	--	--	--	--
N9MP2050B12A	15 1/2	14	12 5/8	--	4 1/2	--	7 3/4
N9MP2075B12A	15 1/2	14	12 5/8	--	4 1/2	--	7 3/4
N9MP2080F16A	19 1/8	17 5/8	14 3/4	--	4 1/2	--	9 1/2
N9MP2100F14A	19 1/8	17 5/8	14 3/4	--	4 1/2	--	9 1/2
N9MP2100J20A	22 3/4	21 1/4	18 3/4	--	4 1/2	--	11 3/8
N9MP2125J20A	22 3/4	21 1/4	18 3/4	--	4 1/2	--	11 3/8
*9MPD050F12A	19 1/8	17 5/8	14 3/4	4 3/8	4 1/2	2 1/2	9 1/2
*9MPD075F12A	19 1/8	17 5/8	14 3/4	4 3/8	4 1/2	2 1/2	9 1/2
*9MPD080J16A	22 3/4	21 1/4	18 3/4	4 3/8	4 1/2	2 5/8	11 3/8
*9MPD100J14A	22 3/4	21 1/4	18 3/4	4 3/8	4 1/2	2 5/8	11 3/8
*9MPD100J20A	22 3/4	21 1/4	18 3/4	4 3/8	4 1/2	2 5/8	11 3/8
*9MPD125L20A	24 1/2	23	23	4 3/8	4 1/2	2 1/4	12 1/4

25-23-36b

Installation Requirements

1. Install furnace level.
2. This furnace is **NOT** to be used for temporary heat of buildings or structures under construction.
3. Install furnace as centralized as practical with respect to the heat distribution system.
4. Install the vent pipes as short as practical. (See ***Vent and Combustion Air Piping*** section).
5. Maintain clearance for fire safety and servicing. A front clearance of 30″ is recommended for access to the burner, controls and filter.
6. Use a raised base for upflow furnace if the floor is damp or wet at times.
7. For downflow installations, non combustible subbase must be used under the furnace unless installation is on a non combustible floor surface. This requirement applies even when a coil box or cabinet is used.

⚠ WARNING

Fire Hazard.

Place furnace on noncombustible subbase on downflow applications, unless installing on non-combustible flooring.

Failure to install unit on noncombustible subbase can result in death, personal injury and/or property damage.

8. For horizontal installations, line contact is permissible only between lines formed by intersection of back and two sides of furnace jacket, and building joists, studs or framing.
9. Residential garage installations require:

- Burners and ignition sources installed at least 18″ above the floor.
- Located or physically protected from possible damage by a vehicle.

10. Local codes may require a drain pan under the entire furnace and condensate trap when the furnace is installed in attic application.

Installation Positions

This furnace can be installed in an upflow, horizontal (either left or right) or downflow airflow position. DO NOT install this furnace on its back. For the upflow position, the return air ductwork can be attached to either the left or right side panel and/or the bottom. For horizontal and downflow positions, the return air ductwork must be attached to the bottom. The return air ductwork must **never** be attached to the back of the furnace.

Furnace Installation Considerations

The installation of the furnace for a given application will dictate the position of the furnace, the airflow, ductwork connections, vent and combustion air piping. Consideration must be given to the following:

Condensate Trap and Drain Lines

The supplied condensate trap must be attached to the furnace side panel on either the left or right side. For horizontal installations, the drain trap is vertically attached to the side panel below the furnace. A minimum clearance of 6″ below the furnace is required for the condensate trap. Downward slope of the condensate drain line from the condensate trap to the drain location must be provided. Adequate freeze protection of the drain trap and the drain line must be provided. See "*Condensate Drain Trap"* section for further details.

Leveling

Proper leveling of the furnace must be provided to insure proper drainage of the condensate from the furnace. The furnace must be level to within $^1/_4$″ from front to back and from side to side for upflow and downflow installations or top to bottom for horizontal installations.

Vent and Combustion Air Connections

On the Dual Certified furnace, the vent and combustion air pipes attach to the furnace through the top panel for the upflow and horizontal installations. For the downflow installation, the vent and combustion air pipes attach to the furnace through the alternate locations on the furnace side panels.

Note: On the Direct Vent furnace, the vent pipe attaches to the furnace through the side panels. The combustion air pipe attaches to the top panel or to the alternate location on the side panel.
On the Single Pipe furnace, the vent pipe attaches to the furnace through the furnace side panels.

Note: Repositioning of the combustion blower is required for the vent pipe connection to the furnace through the "right side" panel. See "*Vent and Combustion Air Piping"* section for further details.

Horizontal Furnace Installation

This furnace can be installed horizontally in an attic, basement, crawl space, alcove, or suspended from a ceiling in a basement or utility room . See **Figure 4. Do not** install furnace on its back or in the reverse airflow positions as safety control operation will be adversely affected.

Figure 4 **Typical Horizontal Installation**

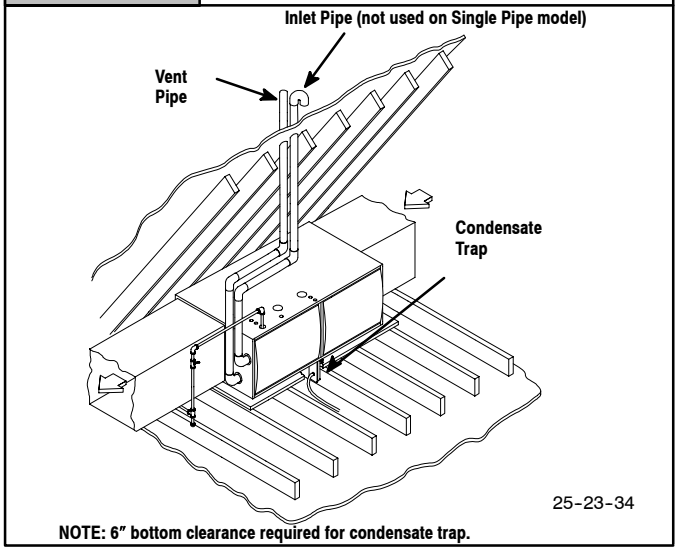

If the furnace is to be suspended from the floor joists in a crawl space or the rafters in an attic, it is necessary to use steel pipe straps or an angle iron frame to rigidly attach the furnace to prevent movement. These straps should be attached to the furnace with sheet metal screws and to the rafters or joists with bolts. The preferred method is to use an angle iron frame bolted to the rafters or joists. (Take caution to allow door panels to be removed for maintenance)

If the furnace is to be installed in a crawl space, consult local codes. A suitable concrete pad or blocks are recommended for crawl space installation on the ground.

NOTE: 6″ bottom clearance required for condensate trap.

Thirty (30) inches between the front of the furnace and adjacent construction or other appliances **MUST** be maintained for service clearance.

Keep all insulating materials clear from louvered door. Insulating materials may be combustible.

The horizontal furnaces may be installed directly on combustible wood flooring or supports as long as all required furnace clearances are met. See **NO TAG.**

This furnace **MUST NOT** be installed directly on carpeting or tile or other combustible material other than wood flooring or supports.

For horizontal installation over a finished living space. A field fabricated auxiliary drain pan with drain pipe is recommended to prevent damage by overflow due to blocked condensate drain.

3. Combustion & Ventilation Air

⚠ WARNING

Poison carbon monoxide gas Hazard.

Use methods described here to provide combustion and ventilation air.

Failure to provide adequate combustion and ventilation air can result in death and/or personal injury.

Venting and Combustion Air Check

NOTE: The following information is supplied to allow the installer to make adjustments to the setup of existing appliances, **IF REQUIRED,** based on good trade practices, local codes, and good judgement of the installer. Manufacturer does **NOT** take responsibility for modifications made to existing equipment.

NOTE: If this installation replaces an existing furnace from a commonly vented system, make sure there is adequate combustion air for all appliances, **MAKE THE FOLLOWING CHECK**.

1. Seal any unused openings in the venting system.
2. Visually inspect the venting system for proper size and horizontal pitch to ensure there is no blockage or restriction, leakage, corrosion or other deficiencies which could cause an unsafe condition.
3. Insofar as is practical, close all doors and windows and all doors between the space in which the appliance(s) remaining connected to the venting system are located and other spaces of the building.
4. Turn on clothes dryers and any appliance not connected to the venting system. Turn on any exhaust fans, such as range hoods and bathroom exhausts, so they will operate at maximum speed. Do not operate a summer exhaust fan. Close fireplace dampers.
5. Follow the lighting instructions for each appliance being inspected. Adjust thermostat so appliance(s) will operate continuously.
6. Allow 5 minutes of main burner operation, then check for spillage at the draft hood relief opening of each appliance. Use the flame of a match or candle (**Figure 5**).

Figure 5 Vent Check

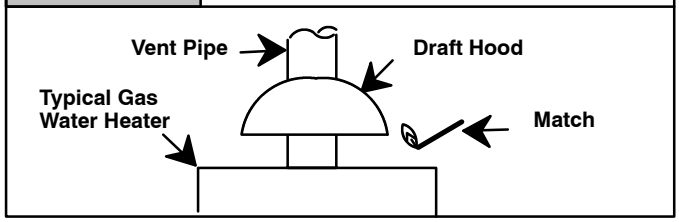

7. After it has been determined that each appliance vents properly, return doors, windows, appliances etc. to their normal condition.
8. If improper venting is observed, the cause **MUST** be corrected using the appropriate tables in code books of country having jurisdiction.

NOTE: If flame pulls towards draft hood, this indicates sufficient venting.

NOTE: Non direct vent appliances occupying same enclosed space as furnace **MUST** have enough air for proper combustion and ventilation. All duct or openings for supplying combustion and ventilation air must comply with the gas and electrical codes of the country having jurisdiction.

When the installation is complete, check that all appliances have adequate combustion air and are venting properly. See *Venting And Combustion Air Check* in this manual.

Air Openings and Connecting Ducts

1. Total input rating for all non direct vent gas appliances **MUST** be considered when determining free area of openings.
2. Connect ducts or openings directly to outside.
3. When screens are used to cover openings, they **MUST** be no less than $^1/_4$″ mesh.
4. The minimum dimension of rectangular air ducts **MUST NOT** be less than 3″.
5. When sizing grille or louver, use the free area of opening. If free area is **NOT** stamped or marked on grill or louver, assume a 20% free area for wood and 60% for metal.

Confined Space Installation

NOTE: A confined space is defined as an area with less than 50 cubic feet per 1,000 BTUH input rating for all gas appliances installed in the area.

Requirements

1. Provide confined space with sufficient air for proper combustion and ventilation of flue gases using horizontal or vertical ducts or openings.

2. **Figure 6** illustrate how to provide combustion and ventilation air. A minimum of two permanent openings, one inlet and one outlet, are required.

3. One opening **MUST** be within 12″ of the floor and the second opening within 12″ of the ceiling.

4. Size openings and ducts per **Table 1.**

5. Horizontal duct openings require 1″ square of free area per 2,000 BTUH of combined input for all gas appliances in area **(**see **Table 1)**.

6. Vertical duct openings or openings directly to outside require 1″ square of free area per 4,000 BTUH for combined input of all gas appliances in area **(**see **Table 1).**

Figure 6 — **Outside Air (This is ONLY a guide. Subject to codes of country having jurisdiction.)**

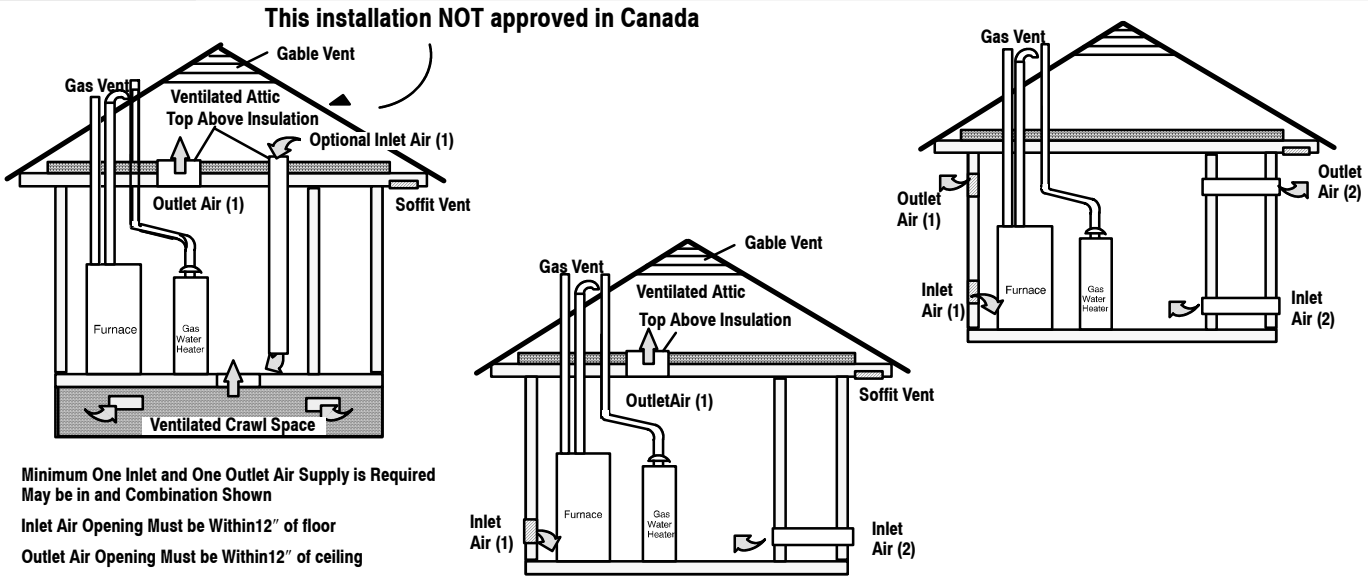

Minimum One Inlet and One Outlet Air Supply is Required
May be in and Combination Shown

Inlet Air Opening Must be Within12″ of floor

Outlet Air Opening Must be Within12″ of ceiling

(1) 1 Square Inch per 4000 BTUH

(2) 1 Square Inch per 2000 BTUH

Table 1 — **Free Area**

BTUH Input Rating	Minimum Free Area Required for Each Opening		
	Horizontal Duct (2,000 BTUH)	Vertical Duct or openings to outside (4,000 BTUH)	Round Duct (4,000 BTUH)
50,000	25 sq. in.	12.5 sq. in.	4″
75,000	37.5 sq. in.	18.75 sq. in.	5″
100,000	50 sq. in.	25 sq. in.	6″
125,000	62.5 sq. in.	31.25 sq. in.	7″
150,000	75 sq. in.	37.5 sq. in.	7″

EXAMPLE: Determining Free Area

Appliance 1 Appliance 2 Total Input

100,000 + 30,000 = (130,000 ÷ 4,000) = 32.5 Sq. In. Vertical

Appliance 1 Appliance 2 Total Input

100,000 + 30,000 = (130,000 ÷ 2,000) = 65 Sq. In. Horizontal

One permanent opening, commencing within 12″ of the top of the enclosure, shall be permitted where the equipment has clearances of at least 1″ from the sides and back and 6″ from the front of the appliance. The opening shall directly communicate with the outdoors or shall communicate through a vertical or horizontal duct to the outdoors or spaces (crawl or attic) that freely communicate with the outdoors, and shall have a minimum free area of:

- 1 sq. in per 3000 Btu per hr. of the total input rating of all equipment located in the enclosure, and
- Not less than the sum of the areas of all vent connectors in the confined space.

Unconfined Space Installation

⚠ WARNING

Poison carbon monoxide gas Hazard.

Most homes will require additional air.

An unconfined space or homes with tight construction may not have adequate air infiltration for proper combustion and ventilation of flue gases.

Failure to supply additional air by means of ventilation grilles or ducts could result in death and/or personal injury.

An unconfined space is defined as an area having a minimum volume of 50 cubic feet per 1,000 Btuh total input rating for all gas appliances in area. Refer to **Table 2** for minimum area required.

Table 2 — **Unconfined Space Minimum Area in Square Feet**

BTUH Input Rating	Minimum Area in Square Feet
50,000	312
78,000	490
114,000	712
155,000	968

EXAMPLE: NOTE: Square feet is based on 8 foot ceilings.

$$\frac{28{,}000\ \text{BTUH}}{1{,}000} \times 50\ \text{Cubic Ft.} = \frac{1{,}400}{8'\ \text{Ceiling Height}} = 175\ \text{Sq. Ft.}$$

NOTE: Refer to definitions in section titled *Unusually Tight Construction.* If any *one* of the conditions apply, the space **MUST** be considered confined space regardless of size.

1. Adjoining rooms can be considered part of an unconfined area if there are openings without doors between rooms.
2. An attic or crawl space may be considered an unconfined space provided there are adequate ventilation openings directly to outdoors. Openings **MUST** remain open and **NOT** have any means of being closed off. Ventilation openings to outdoors **MUST** be at least 1″ square of free area per 4,000 BTUH of total input rating for all gas appliances in area.
3. Install air intake a minimum of 12″ above maximum snow level and clear of any obstruction. Duct or ventilation opening requires one square inch of free area per 4,000 BTUH of total input rating for all gas appliances in area.
4. Air inlet **MUST** be screened with not less than $^1/_4$″ mesh screen.

Unusually Tight Construction

In unconfined spaces, infiltration may be adequate to provide air for combustion, ventilation and dilution of flue gases. However, in buildings with unusually tight construction, additional air **MUST** be provided using the methods described in section titled *Confined Space Installation*:

Unusually tight construction is defined as: Construction with

1. Walls and ceilings exposed to the outside have a continuous, sealed vapor barrier. Openings are gasketed or sealed and
2. Doors and openable windows are weather stripped and
3. Other openings are caulked or sealed. These include joints around window and door frames, between sole plates and floors, between wall-ceiling joints, between wall panels, at penetrations for plumbing, electrical and gas lines, etc.

Ventilation Air

Some provincial codes and local municipalities require ventilation or make-up air be brought into the conditioned space as replacement air. Whichever method is used, the mixed return air temperature across the heat exchanger **MUST** not fall below 60°F or flue gases will condense in the heat exchanger. This will shorten the life of the heat exchanger and possibly void your warranty.

4. Vent and Combustion Air Piping

⚠ WARNING

Poison carbon monoxide gas, fire and explosion hazard.

Read and follow all instructions in this section.

Failure to properly vent this furnace can result in death, personal injury and/or property damage.

Single Pipe (N9MP1 Models)

This furnace is certified as a category IV appliance. This furnace requires ventilation openings to provide air for proper combustion and ventilation of flue gases. All duct or openings for supplying combustion and ventilation air must comply with the gas codes or in absence of local codes, the applicable national codes.

When the installation is complete, see the "***Venting and Combustion Air Check***" in this manual.

Direct Vent (N9MP2 Models)

This furnace is certified as a category IV appliance. This furnace uses outside air for combustion ONLY, it **MUST** be taken from the same atmospheric pressure zone as the vent pipe. See ***Confined Space Installation*** in the ***Combustion and Ventilation Air*** in this manual.

Dual Certified (*9MPD Models)

This furnace is certified as a category IV appliance. This furnace can be installed as a direct vent furnace using outside air for combustion or the furnace can use air from inside the structure for combustion. The **INLET** air pipe is optional. If combustion air comes from inside the structure, adequate make up air **MUST** be provided to compensate for oxygen burned. See ***Confined Space Installation*** in the ***Combustion and Ventilation Air*** chapter. If combustion air is drawn from outside the structure, it **MUST** be taken from the same atmospheric pressure zone as the vent pipe.

Contaminated Combustion Air

Installations in certain areas or types of structures will increase the exposure to chemicals or halogens that may harm the furnace.

The following areas or types of structures may contain or have exposure to the substances listed below. The installation must be evaluated carefully as it may be necessary to provide outside air for combustion.

- Commercial buildings.
- Buildings with indoor pools.
- Furnaces installed in laundry rooms.
- Furnaces installed in hobby or craft rooms.
- Furnaces installed near chemical storage areas.
- Permanent wave solutions for hair.
- Chlorinated waxes and cleaners.
- Chlorine based swimming pool chemicals.
- Water softening chemicals.
- De-icing salts or chemicals.
- Carbon tetrachloride.
- Halogen type refrigerants.
- Cleaning solvents (such as perchloroethylene).
- Printing inks, paint removers, varnishes, etc.
- Hydrochloric acid.
- Sulfuric Acid.
- Solvent cements and glues.
- Antistatic fabric softeners for clothes dryers.
- Masonry acid washing materials.

Vent and Combustion Air Piping Guidelines

NOTE: All vent piping **MUS**T be installed in compliance with local codes or ordinances, these instructions, good trade practices, and codes of country having jurisdiction.

1. Determine the best routing and termination for the vent pipe and air inlet pipe by referring to all of the instructions and guidelines in this Section.
2. Determine the size required for the vent pipe and air inlet pipe.
3. Loosely assemble all venting parts without adhesive (pipe joint cement) for correct fit before final assembly.
4. Use of vertical piping is preferred because there will be some moisture in the flue gases that may condense as it leaves the vent pipe (See *Special Instruction For Horizontal Vents*).
5. The vertical vent pipe **MUST** be supported so that no weight is allowed to rest on the combustion blower.
6. Exhaust vent piping or air inlet piping diameter **MUST NOT** be reduced.
7. All exhaust vent piping from the furnace to termination **MUST** slope upwards. A minimum of $^1/_4$″ per foot of run is required to properly return condensate to the furnace drain system.
8. Use DWV type long radius elbows whenever possible, as they provide for the minimum slope on horizontal runs and they provide less resistance in the vent system. If DWV elbows cannot be used, use two, 45° elbows when possible. On horizontal runs the elbows can be slightly misaligned to provide the correct slope.
9. All horizontal pipe runs **MUST** be supported at least every five feet with galvanized strap or other rust resistant material. **NO** sags or dips are permitted.
10. All vertical pipe runs **MUST** be supported every six feet where accessible.
11. The minimum pipe run length is 2′.
12. The piping can be run in the same chase or adjacent to supply or vent pipe for water supply or waste plumbing. It can also be run in the same chase with a vent from another 90+ furnace.

    NOTE: In **NO** case can the piping be run in a chase where temperatures can exceed 140° F. or where radiated heat from adjacent surfaces would exceed 140° F.
13. The vent outlet **MUST** be installed to terminate in the same atmospheric pressure zone as the combustion air inlet.
14. The vent system can be installed in an existing unused chimney provided that:

- Both the exhaust vent and air intake run the length of the chimney.
- No other gas fired appliance or fireplace (solid fuel) is vented into the chimney.
- The top of the chimney **MUST** be sealed flush or crowned up to seal against rain or melting snow so **ONLY** the piping protrudes.
- The termination clearances shown in **Figure 7** are maintained.

15. Furnace applications with vertical vents requiring vent diameter increaser fittings **must** have increaser fittings installed in vertical portion of the vent. Condensate will be trapped in the vent if the vent diameter is increased prior to having an elbow turned upward. This could cause nuisance tripping of the pressure switch.

Piping Insulation Guidelines

NOTE: Use closed cell, neoprene insulation or equivalent. If Fiberglass or equivalent insulation is used it must have a vapor barrier. Use R values of 7 up to 10′, R–11 if exposure exceeds 10′. If Fiberglass insulation is used, exterior to the structure, the pipe **MUST** be boxed in and sealed against moisture.

1. When the vent or combustion air pipe height above the roof exceeds 30″, or if an exterior vertical riser is used on a horizontal vent to get above snow levels, the exterior portion **MUST** be insulated.
2. When combustion air inlet piping is installed above a suspended ceiling, the pipe **MUST** be insulated with moisture resistant insulation such as Armaflex or other equivalent type of insulation.
3. Insulate combustion air inlet piping when run in warm, humid spaces such as basements.

Sizing Combustion Air and Vent Pipe

Consult Table 3 or Table 4 to select the proper diameter exhaust and combustion air piping. Exhaust and combustion air piping is sized for each furnace Btuh size based on total lineal vent length (on inlet ***or*** outlet side), and number of 90° elbows required. Two 45° elbows can be substituted for one 90° elbow. The elbow or elbows used for vent termination outside the structure **ARE** counted, including elbows needed to bring termination above expected snow levels. The elbow inside the furnace on the *9MPD **IS NOT** included in the count.

Table 3	Pipe Diameter Table N9MP1 & *9MPD Models
50,000, 75,000 & 80,000 Btuh Furnaces	
40′ & (5) 90° elbows with 2″ PVC pipe or **70**′ & (5) 90° elbows with 3″ PVC pipe	
100,000 Btuh Furnace	
40′ & (5) 90° elbows with 3″ PVC pipe or **70**′ & (5) 90° elbows with 3″ PVC pipe & Long Vent Kit (See Tech. Manual)	
125,000 Btuh Furnace	
40′ & (5) 90° elbows with 3″ PVC pipe	
Elbows are DWV Long Radius Type for 2″ and 3″ vents.	

If more than five elbows are required, reduce the length of both the inlet and exhaust pipes 5′ for each additional elbow used.

NOTE: It is allowable to use larger diameter pipe and fitting than shown in the tables but **not** smaller diameters than shown.

Table 4	Pipe Diameter Table N9MP2 Models
50,000 & 80,000 Btuh Furnaces	
40′ & (5) 90° elbows with 2″ PVC pipe or **70**′ & (5) 90° elbows with 3″ PVC pipe	
75,000 Btuh Furnaces	
25′ & (3) 90° elbows with 2″ PVC pipe or **40**′ & (5) 90° elbows with 2″ PVC pipe & Long Vent Kit (See Tech. Manual) or **70**′ & (5) 90° elbows with 3″ PVC pipe	
100,000 Btuh Furnace	
40′ & (5) 90° elbows with 3″ PVC pipe or **70**′ & (5) 90° elbows with 3″ PVC pipe & Long Vent Kit (See Tech. Manual)	
125,000 Btuh Furnace	
40′ & (5) 90° elbows with 3″ PVC pipe	
Elbows are DWV Long Radius Type for 2″ and 3″ vents.	

If more than five elbows are required, reduce the length of both the inlet and exhaust pipes 5′ for each additional elbow used.

For *"Concentric Termination Kit"* Venting table, see "*Section 11"* in this manual.

Vent Termination Clearances

⚠ WARNING

Poison carbon monoxide gas, fire and explosion hazard.

Inlet and outlet pipes may NOT be vented directly above each other.

Failure to properly vent this furnace can result in death, personal injury and/or property damage.

1. Determine termination locations based on clearances specified in following steps and as shown in **Figure 7, Figure 19,** through **Figure 27.**

For *"Concentric Termination Kit"* clearances, see Figure 45, Figure 46, Figure 47, Figure 48 and Figure 49 in "*Section 10"* in this manual.

2. The vent termination must be located at least 12″ above ground or normally expected snow accumulation levels.
3. Do **NOT** terminate over public walkways. Avoid areas where condensate may cause problems such as above planters, patios, or adjacent to windows where steam may cause fogging.
4. The vent termination shall be located at least 4′ horizontally from any electric meter, gas meter, regulator, and any relief equipment. These distances apply **ONLY** to U.S. installations.
5. The vent termination is to be located at least 3′ above any forced air inlet located within 10′ ; and at least 10′ from a combustion air intake of another appliance, except another direct vent furnace intake.
6. In Canada, the *Canadian Fuel Gas Code* takes precedence over the preceding termination instructions.

Figure 7 — **Vent Termination Clearances (United States Only)**

In Canada See Canadian Fuel Gas Code

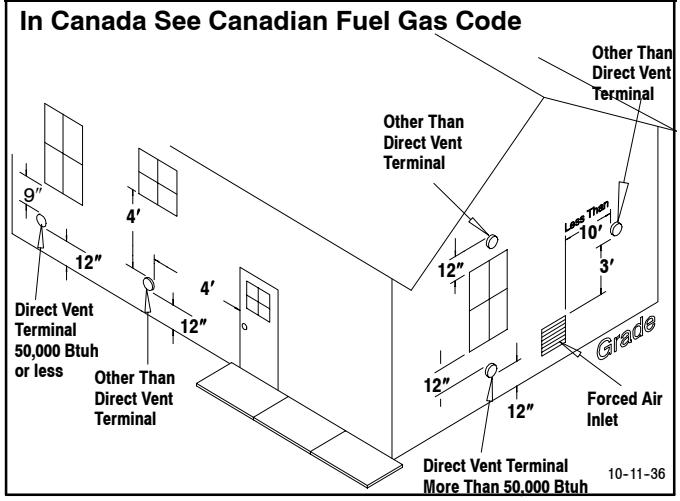

Condensate Drain Trap

This furnace removes both sensible and latent heat from the products of combustion. Removal of the latent heat results in condensation of the water vapor. The condensate is removed from the furnace through the drains in the plastic transition and the vent fitting. The drains connect to the externally mounted condensate drain trap on the left or right side of the furnace.

The startup of a new furnace will involve a cycle or two of the furnace to properly prime the condensate trap with water. Until the trap is fully primed, some condensate will be pulled into the combustion blower. The furnace may cycle on the pressure switch connected to the plastic transition box due to condensate buildup. After the trap is primed, the condensate will start draining from the furnace. The combustion blower will clear out any remaining condensate in the blower housing through the vent fitting downstream of the blower. Note that the condensate trap can also be primed by pouring water into the vent drain side of the trap. Remove the small plastic cap and clamps from the unused drain stub on the vent drain side of the condensate trap. Connect a section of the $^5/_8$″ OD hose with a funnel to the drain stub and pour eight (8) ounces of water into the trap. Remove the hose and replace the plastic cap and clamp. This will prime both the vent and the transition sides of the trap.

The condensate drain trap supplied with the furnace MUST be used. The drain connection on the condensate drain trap is sized for $^3/_4$″ PVC or CPVC pipe. Alternate drain pipes and hoses may be used as allowed by local codes.

The drain line must maintain a $^1/_4$″ per foot downward slope toward the drain.

DO NOT trap the drain line in any other location than at the condensate drain trap supplied with the furnace.

⚠ WARNING

Frozen water pipe hazard.

When activated an auxiliary safety switch will cause a furnace not to operate.

During freezing temperatures the water pipes in your home could freeze and burst causing water damage to the home.

Do not leave the home unattended during freezing temperatures, or shut off the water supply and drain the pipes before leaving.

If possible DO NOT route the drain line where it may freeze. The drain line must terminate at an inside drain to prevent freezing of the condensate and possible property damage.

1. A condensate sump pump **MUST** be used if required by local codes, or if no indoor floor drain is available. The condensate pump must be approved for use with acidic condensate.
2. A plugged condensate drain line or a failed condensate pump will allow condensate to spill. If the furnace is installed where a condensate spill could cause damage, it is recommended that an auxiliary safety switch be installed to prevent operation of the equipment in the event of pump failure or plugged drain line. If used, an auxiliary safety switch should be installed in the R circuit (low voltage) **ONLY**.

Condensate Drain Trap Freeze Protection

Special precautions **MUST** be made if installing furnace in an area which may drop below freezing. This can cause improper operation or damage to the equipment. If the the furnace environment has the potential of freezing, the drain trap and drain line must be protected. Use 3 to 6 watt per foot at 115 volt, 40° F self–regulating shielded and waterproof heat tape. Wrap the drain trap and drain line with the heat tape and secure with the ties. Follow the heat tape manufacturer's recommendations.

Figure 8 Upflow Installations (Dual Certified *9MPD Models)

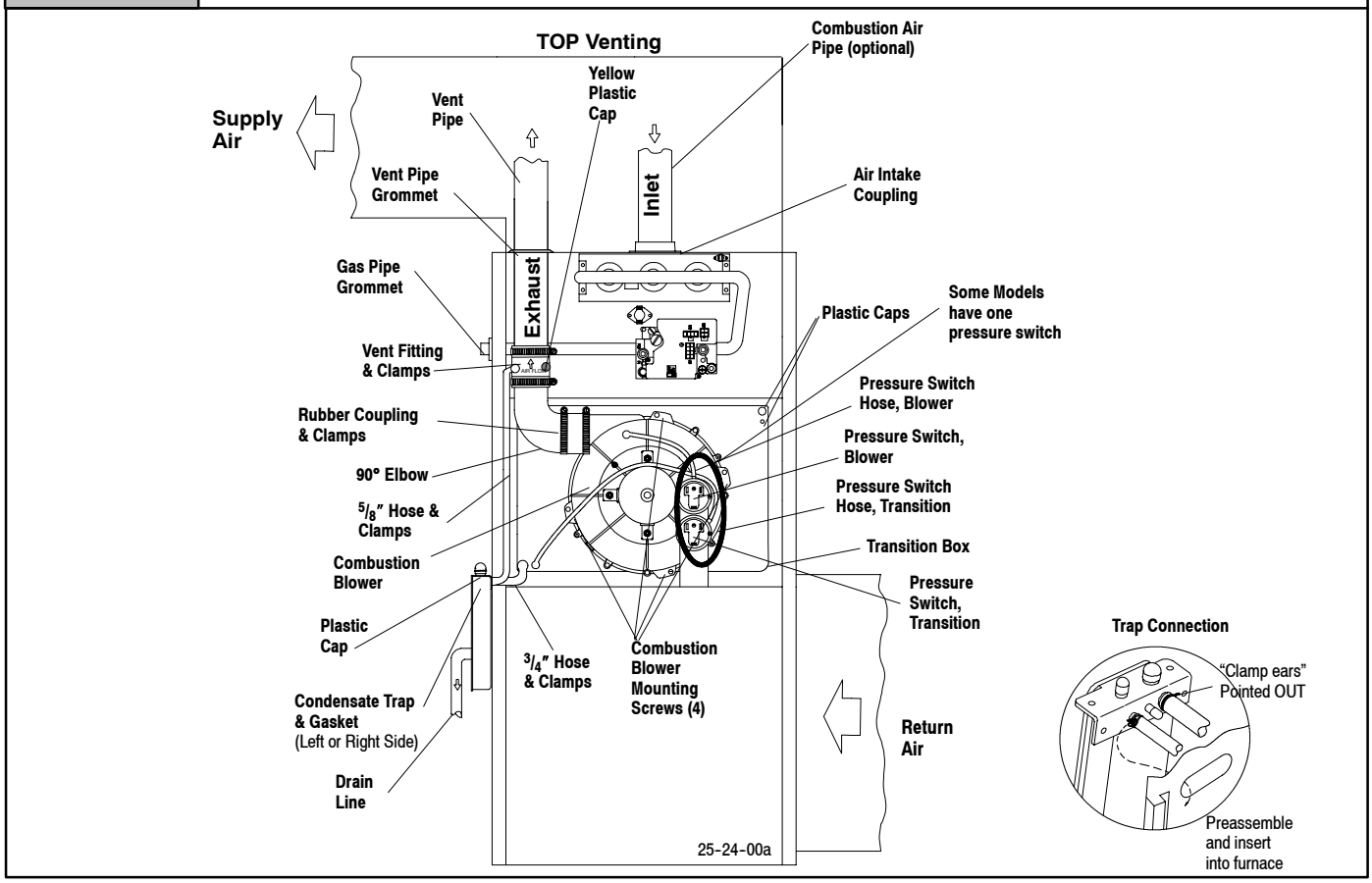

Upflow Installations - (Dual Certified *9MPD)(See Figure 8)

Note: For easier installation of the drain hoses and clamps to the condensate trap, follow the directions outlined below except do not make any clamp connections to any of the drain stubs and hoses until the hose routing and lengths have been determined. Remove the condensate trap and drain hoses from the furnace and secure the drain hoses to the drain stubs on the trap with the hose clamps (position the clamps as shown in **Figure 8).** Install the condensate trap/hose assembly to the furnace casing. Hook one side of the "clamp ears" on the drain stub through the hole in the casing and push the condensate trap into position. Secure with the two screws. Reconnect the drain hoses to the stubs on the vent fitting and the plastic transition and secure with the clamps.

Mount the condensate drain trap in a vertical position to either the left or right side of the furnace using the two screws and gasket that are provided. If needed, remove the hole plugs from the furnace side panel and relocate to the open set of holes in the opposite side panel.

Ensure that the vent fitting and the 90° elbow is securely attached to the combustion blower using the rubber coupling and clamps.

Plug the right drain stub of the vent fitting with the yellow plastic cap.

For left side venting, remove vent fitting assembly from combustion blower. Remove 90° elbow and rubber tubing from the vent fitting by loosening the clamp on the vent fitting. Securely attach vent fitting to combustion blower.

NOTE: For left side venting, the vent fitting MUST be installed with the airflow marking arrow pointed toward the vent pipe, with the drain stub at a 20° to 30° downward slope.

This configuration allows left side venting from the furnace. If right side venting is required, the combustion blower must be relocated on the plastic transition box. Remove the four(4) screws that secure the blower to the transition. Rotate the blower 180° and secure with the four(4) screws. Use caution to not over tighten the screws to prevent stripping out of the plastic mounting holes.

NOTE: For right side venting, the vent fitting MUST be installed with the airflow marking arrow pointed toward the vent pipe, with the drain stub at a 5° to 10° downward slope. (See **Figure 9**)

Plug the upper drain stub on the vent fitting with the yellow plastic cap.

For left side mounted condensate trap, connect the $^3/_4$" OD rubber hose with the 90° bend to the large drain stub on the condensate trap and secure with a $^3/_4$" clamp.

Route the hose to the drain stub on the bottom of the plastic transition box. Cut off excess hose and discard. Connect the hose with the 90° bend to the drain stub on the transition and secure with a $^3/_4$" clamp.

Figure 9 **Upflow Installations (Dual Certified *9MPD Models)**

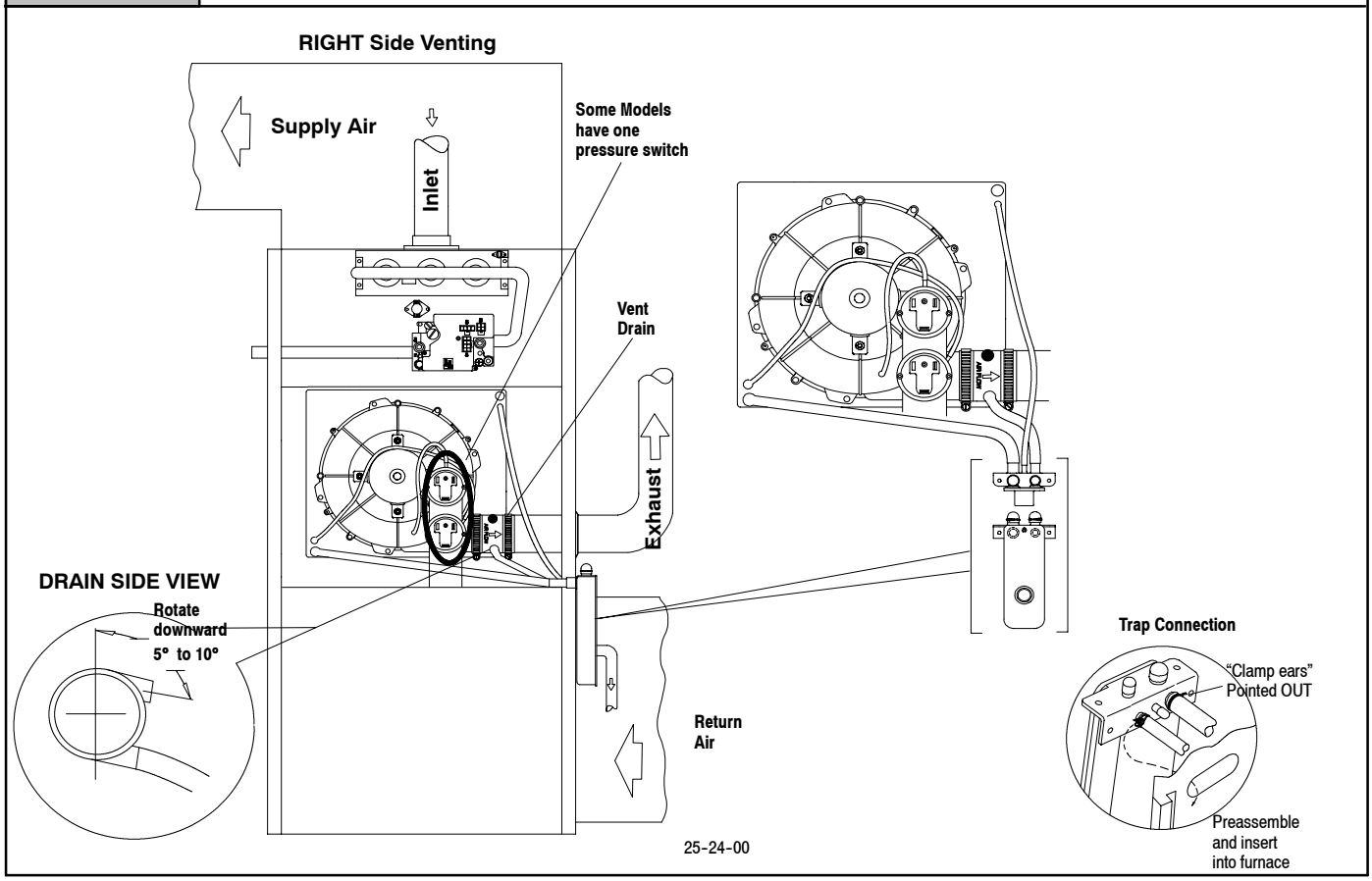

For right side mounted condensate trap, the pressure tap on the condensate trap MUST be connected to the unused pressure tap located on the upper right hand corner of the plastic transition box. Remove the plastic caps from the pressure taps on the condensate trap and the plastic transition and connect with the 14″ length of $^5/_{16}$″ OD rubber hose. (See **Figure 9**)

Connect the $^5/_8$″ OD rubber hose with the 90° bend to the left drain stub on the vent fitting and secure with a $^5/_8$″ clamp.

Route the hose to the small drain stub on the condensate trap. Cut off excess hose and discard. Connect the hose to the drain stub on the trap and secure with a $^5/_8$″ clamp.

NOTE: Ensure hoses maintain a downward slope to the condensate trap with no kinking or binding for proper condensate drainage.

Figure 10 **Horizontal Left Installations (Dual Certified *9MPD)**

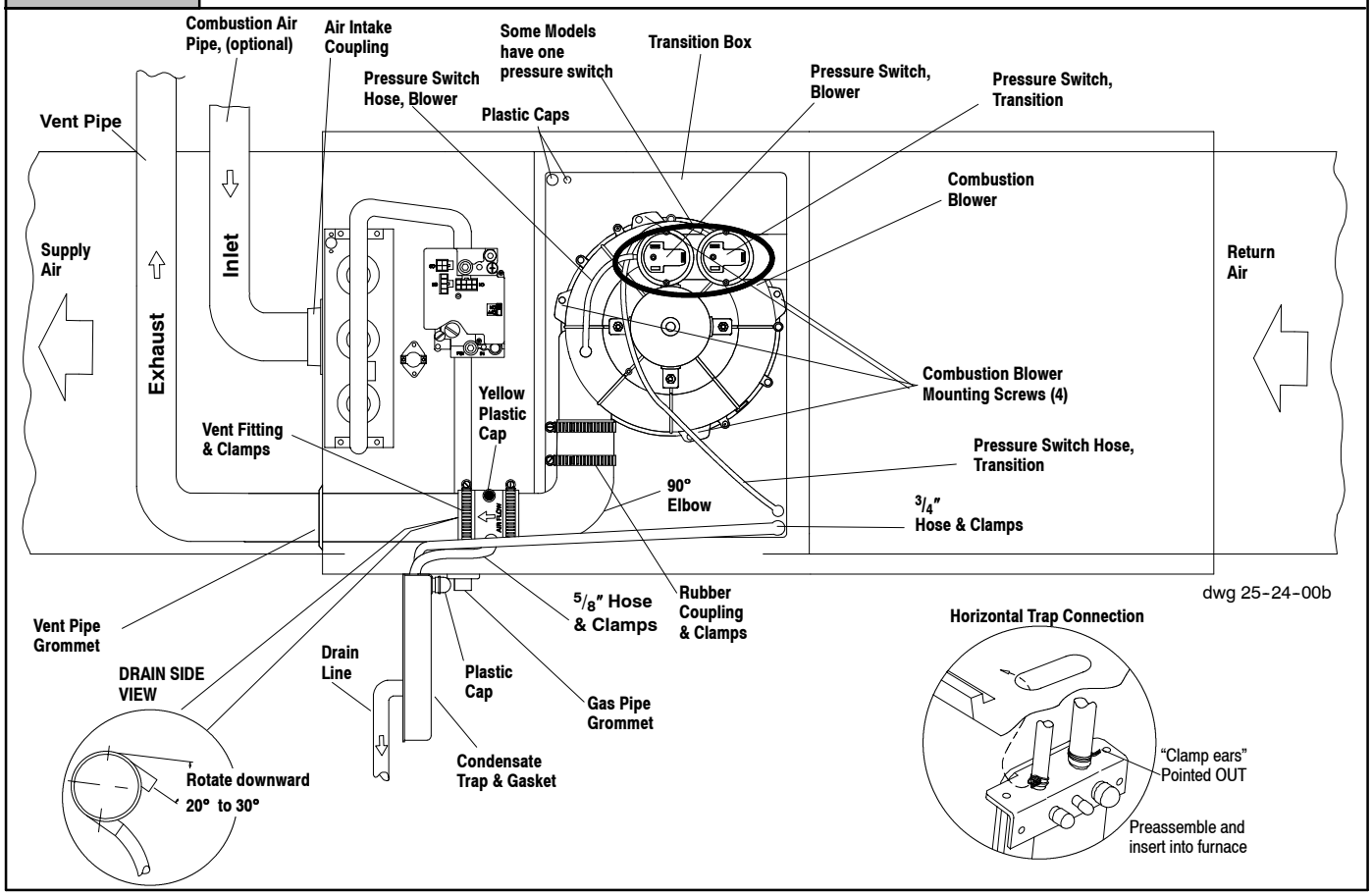

Horizontal Left Installations - (Dual Certified *9MPD) (See Figure 10)

Note: For easier installation of the drain hoses and clamps to the condensate trap, follow the directions outlined below except do not make any clamp connections to any of the drain stubs and hoses until the hose routing and lengths have been determined. Remove the condensate trap and drain hoses from the furnace and secure the drain hoses to the drain stubs on the trap with the hose clamps (position the clamps as shown in **Figure 10).** Install the condensate trap/hose assembly to the furnace casing. Hook one side of the "clamp ears" on the drain stub through the hole in the casing and push the condensate trap into position. Secure with the two screws. Reconnect the drain hoses to the stubs on the vent fitting and the plastic transition and secure with the clamps.

Relocate the plastic caps and clamps on the condensate drain trap from the vertical drain stub to the horizontal drain stubs. Secure the clamps tightly to prevent condensate leakage.

Mount the condensate drain trap in a vertical position to the left side of the furnace using the two screws and gasket that are provided. Note: The condensate trap will be located under the furnace in a vertical position when the furnace is placed horizontally on the left side. If needed, remove the hole plugs from the furnace side panel and relocate to the open set of holes in the opposite side panel.

Connect the vent fitting and the 90° elbow to the combustion blower using the rubber coupling and clamps.

NOTE: The vent fitting **MUST** be installed with the airflow marking arrow pointed toward the vent pipe, with the drain stub at a 20 to 30° downward slope.

Plug the upper drain stub on the vent fitting with the yellow plastic cap.

Connect the $^5/_8$″ OD rubber hose with the 90° bend to the small drain stub on the trap and secure with a $^5/_8$″ clamp.

Route the hose to the lower drain stub on the vent fitting. Cut off excess hoses and discard. Connect the hose to the drain stub on the vent fitting and secure with a $^5/_8$″ clamp.

Connect the $^3/_4$″ OD rubber hose with the 90° bend to the large drain stub on the condensate trap and secure with a $^3/_4$″ clamp.

Route the hose over the top of the $^5/_8$″ OD hose to the drain stub on the bottom of the plastic transition box. Cut off excess hose and discard. Connect the hose to the drain stub on the transition and secure with a $^3/_4$″ clamp.

NOTE: Ensure hoses maintain a downward slope to the condensate trap with no kinking or binding for proper condensate drainage.

Figure 11 **Horizontal Right Installations (Dual Certified *9MPD)**

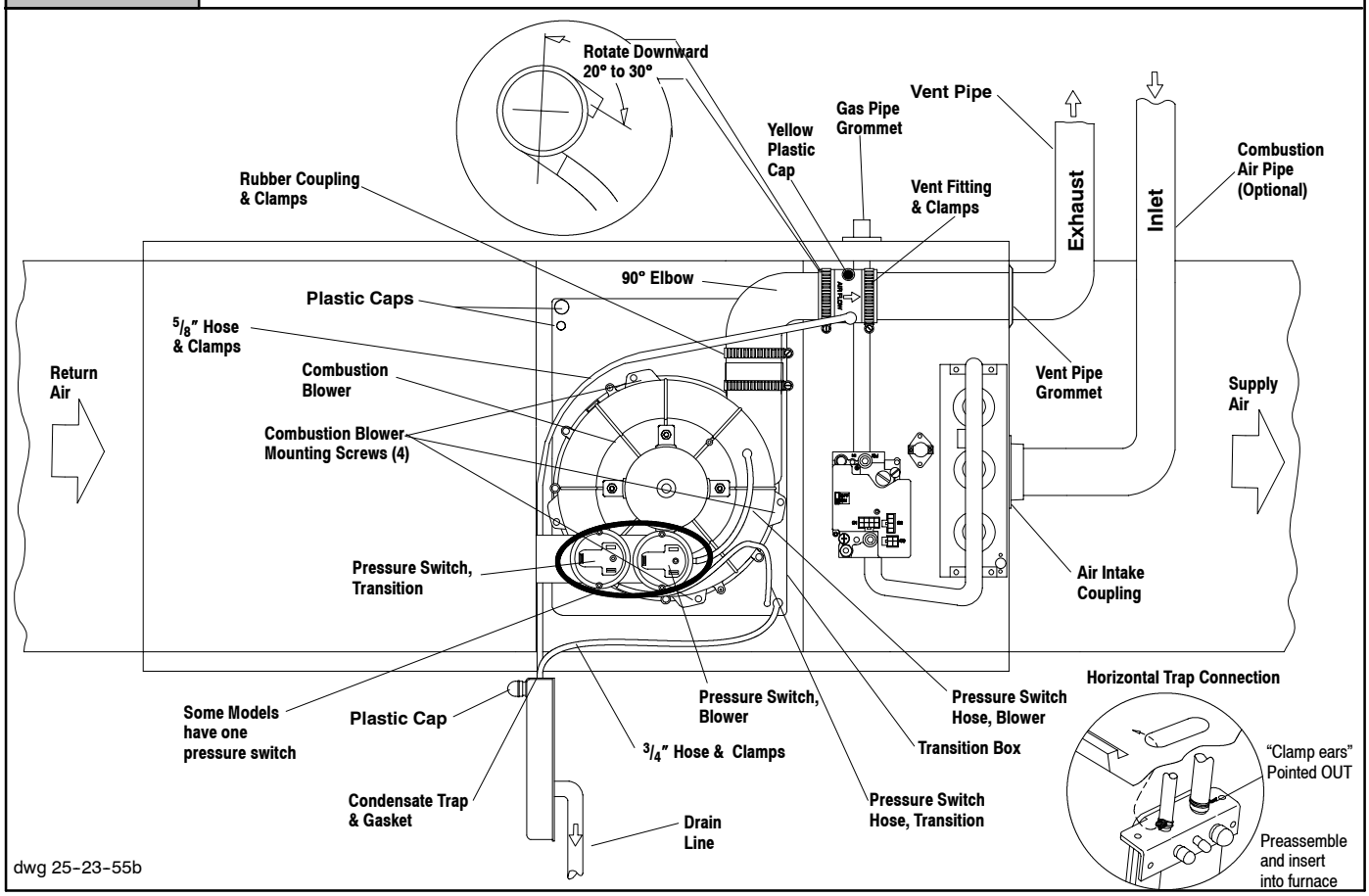

Horizontal Right Installations - (Dual Certified *9MPD) (See Figure 11)

Note: For easier installation of the drain hoses and clamps to the condensate trap, follow the directions outlined below except do not make any clamp connections to any of the drain stubs and hoses until the hose routing and lengths have been determined. Remove the condensate trap and drain hoses from the furnace and secure the drain hoses to the drain stubs on the trap with the hose clamps (position the clamps as shown in **Figure 11).** Install the condensate trap/hose assembly to the furnace casing. Hook one side of the "clamp ears" on the drain stub through the hole in the casing and push the condensate trap into position. Secure with the two screws. Reconnect the drain hoses to the stubs on the vent fitting and the plastic transition and secure with the clamps.

Relocate the plastic caps and clamps on the condensate drain trap from the vertical drain stub to the horizontal drain stubs. Secure the clamps tightly to prevent condensate leakage.

Mount the condensate drain trap in a vertical position to the right side of the furnace using the two screws and gasket that are provided. Note: The condensate trap will be located under the furnace in a vertical position when the furnace is placed horizontally on the right side. If needed, remove the hole plugs from the furnace side panel and relocated to the open set of holes in the opposite side panel.

Connect the vent fitting and the 90° elbow to the combustion blower using the rubber coupling and clamps.

NOTE: The vent fitting MUST be installed with the airflow marking arrow pointed toward the vent pipe, with the drain stub at a 20° to 30° downward slope.

Plug the upper drain stub on the vent fitting with the yellow plastic cap.

Remove the pressure switch hose from the upper stub on the plastic transition box.

Relocate the plastic caps on the stubs of the plastic transition box from the lower stubs to the upper stubs and secure tightly with the clamps.

Route the pressure switch hose to the lower stub on the plastic transition box. Cut off excess hose and discard. Connect the pressure switch hose to the lower stub on the plastic transition box. Ensure that the hose is routed above the stub on the transition box so that condensate does not collect in the hose. NOTE: Failure to correctly install the pressure switch hose to the transition can adversely affect the safety control operation.

Connect the $^3/_4$″ OD rubber hose with the 90° bend to the large drain stub on the condensate trap and secure with a $^3/_4$″ clamp.

Route the hose to the drain stub on the bottom of the plastic transition box. Cut off excess hose and discard. Connect the hose to the drain stub on the transition and secure with a $^3/_4$″ clamp.

Connect the $^5/_8$″ OD rubber hose with the 90° bend to the lower drain stub on the vent fitting and secure with a $^5/_8$″ clamp.

Route the hose to the smaller drain stub on the condensate trap. Cut off excess hose and discard. Connect the hose to the drain stub on the trap and secure with a $^5/_8$″ clamp.

NOTE: Ensure hoses maintain a downward slope to the condensate trap with no kinking or binding for proper condensate drainage.

Figure 12 **Downflow Installations (Dual Certified *9MPD Models)**

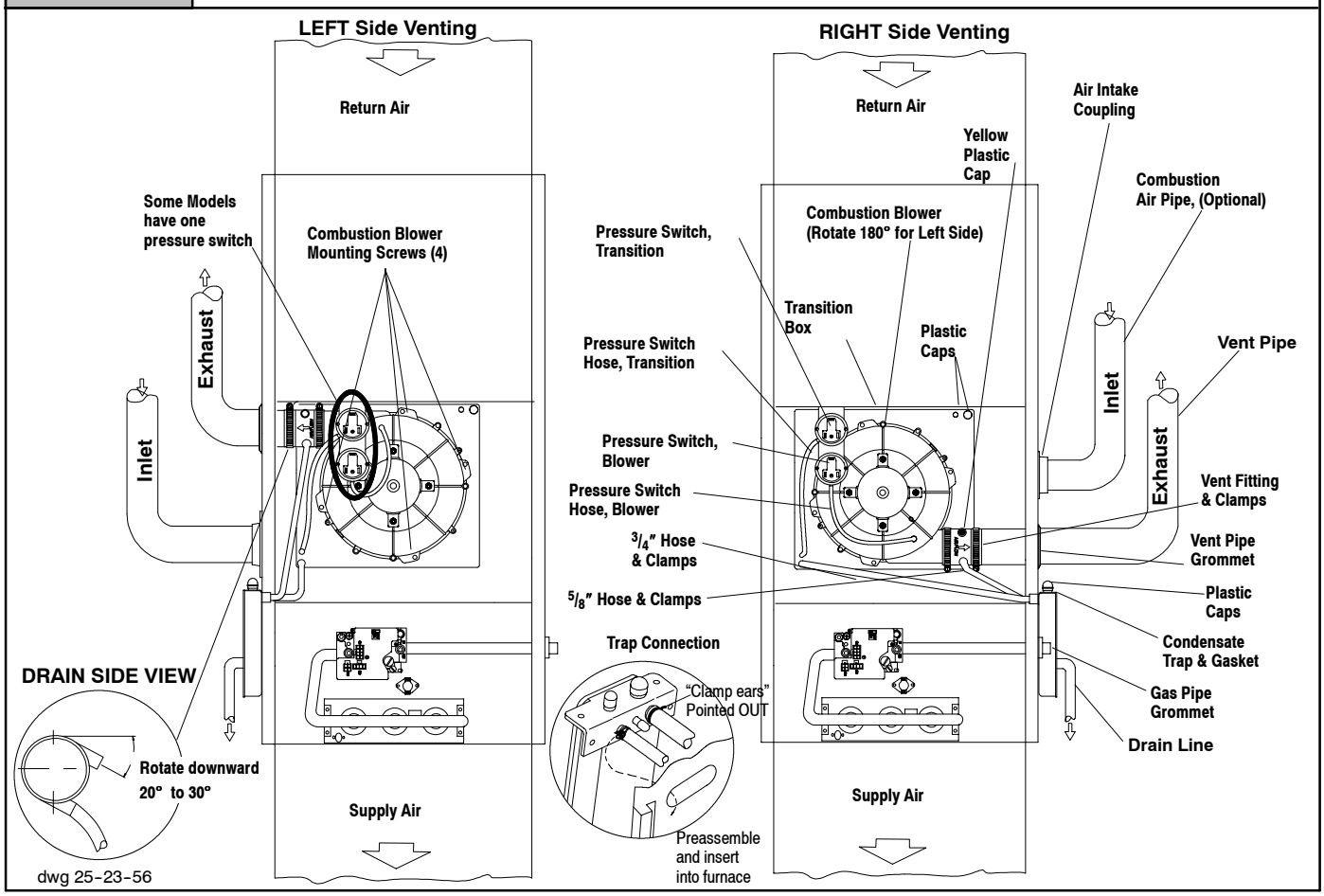

Downflow Installations - (Dual Certified *9MPD Models) (See Figure 12)

Note: For easier installation of the drain hoses and clamps to the condensate trap, follow the directions outlined below except do not make any clamp connections to any of the drain stubs and hoses until the hose routing and lengths have been determined. Remove the condensate trap and drain hoses from the furnace and secure the drain hoses to the drain stubs on the trap with the hose clamps (position the clamps as shown in **Figure 12).** Install the condensate trap/hose assembly to the furnace casing. Hook one side of the "clamp ears" on the drain stub through the hole in the casing and push the condensate trap into position. Secure with the two screws. Reconnect the drain hoses to the stubs on the vent fitting and the plastic transition and secure with the clamps.

Mount the condensate drain trap in a vertical position to either the right or left side of the furnace using the two screws and gasket that are provided. If needed, remove the hole plugs from the furnace side panel and relocated to the open set of holes in the opposite side panel.

Ensure that the vent fitting is securely attached to the combustion blower using the rubber coupling and clamps.

This configuration allows right side venting from the furnace. If the left side venting is required, the combustion blower must be relocated on the plastic transition box. Remove the four(4) screws that secure the blower to the transition. Rotate the blower 180° and secure with the four(4) screws. Use caution to not over tighten the screws to prevent stripping out of the plastic mounting holes.

For right side venting, remove vent fitting assembly from combustion blower. Remove 90° elbow and rubber tubing from the vent fitting by loosening the clamp on the vent fitting. Securely attach vent fitting to combustion blower.

NOTE: The vent fitting **MUST** be installed with the airflow marking arrow pointed toward the vent pipe, with the drain stub at a 20° to 30° downward slope.

Plug the upper drain stub of the vent fitting with the yellow plastic cap.

Remove the pressure switch hose from the upper stub on the plastic transition box.

Relocate the plastic caps on the stubs of the plastic transition box from the lower stubs to the upper stubs and secure tightly with the clamps.

Route the pressure switch hose to the lower stub on the plastic transition box. Cut off excess hose and discard. Connect the pressure switch hose to the lower stub on the plastic transition box. **NOTE:** Failure to correctly install the pressure switch hose to the transition box can adversely affect the safety control operation.

Connect the $^3/_4$″ OD rubber hose with the 90° bend to the drain stub on the bottom of the plastic transition box and secure with a $^3/_4$″ clamp.

Route the hose to the large drain stub on the condensate trap. Cut off excess hose and discard. Connect the hose to the drain stub on the transition and secure with a $^3/_4$″ clamp.

Connect the $^5/_8$″ OD rubber hose with the 90° bend to the left drain stub on the vent fitting and secure with a $^5/_8$″ clamp.

Route the hose to the smaller stub on the condensate trap. Cut off excess hose and discard. Connect the hose to the drain stub on the trap and secure with a $^5/_8$″ clamp.

NOTE: Ensure hoses maintain a downward slope to the condensate trap with no kinking or binding for proper condensate drainage.

Figure 13 Upflow Installations (Single Pipe & Direct Vent N9MP1 & N9MP2 Models)

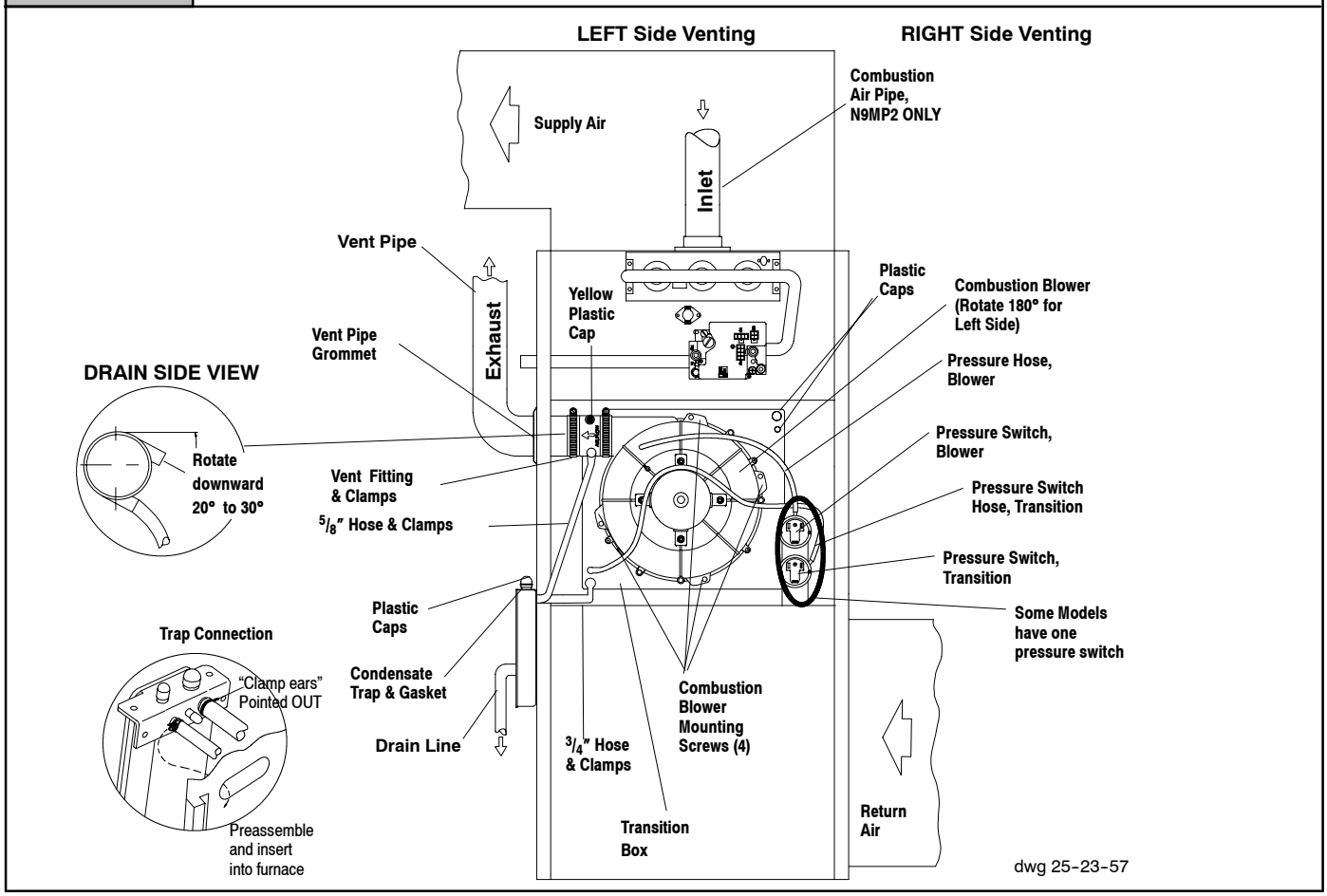

Upflow Installations - (Single Pipe & Direct Vent N9MP1 & N9MP2 Models) (See Figure 13)

Note: For easier installation of the drain hoses and clamps to the condensate trap, follow the directions outlined below except do not make any clamp connections to any of the drain stubs and hoses until the hose routing and lengths have been determined. Remove the condensate trap and drain hoses from the furnace and secure the drain hoses to the drain stubs on the trap with the hose clamps (position the clamps as shown in **Figure 13).** Install the condensate trap/hose assembly to the furnace casing. Hook one side of the "clamp ears" on the drain stub through the hole in the casing and push the condensate trap into position. Secure with the two screws. Reconnect the drain hoses to the stubs on the vent fitting and the plastic transition and secure with the clamps.

Mount the condensate drain trap in a vertical position to either the left or right side of the furnace using the two screws and gasket that are provided. If needed, remove the hole plugs from the furnace side panel and relocate to the open set of holes in the opposite side panel.

Ensure that the vent fitting is securely attached to the combustion blower using the rubber coupling and clamps.

NOTE: For left side venting, the vent fitting **MUST** be installed with the airflow marking arrow pointed toward the vent pipe, with the drain stub at a 20° to 30° downward slope.

This configuration allows left side venting from the furnace. If right side venting is required, the combustion blower must be relocated on the plastic transition box. Remove the four(4) screws that secure the blower to the transition. Rotate the blower 180° and secure with the four(4) screws. Use caution to not over tighten the screws to prevent stripping out of the plastic mounting holes.

NOTE: For right side venting, the vent fitting MUST be installed with the airflow marking arrow pointed toward the vent pipe, with the drain stub at a 5° to 10° downward slope. (See **Figure 14)**

Plug the upper drain stub of the vent fitting with the yellow plastic cap.

For left side mounted condensate trap, connect the $^3/_4$″ OD rubber hose with the 90° bend to the large drain stub on the condensate trap and secure with a $^3/_4$″ clamp.

Route the hose to the drain stub on the bottom of the plastic transition box. Cut off excess hose and discard. Connect the hose with the 90° bend to the drain stub on the transition and secure with a $^3/_4$″ clamp.

Figure 14 **Upflow Installations (Single Pipe & Direct Vent N9MP1 & N9MP2 Models)**

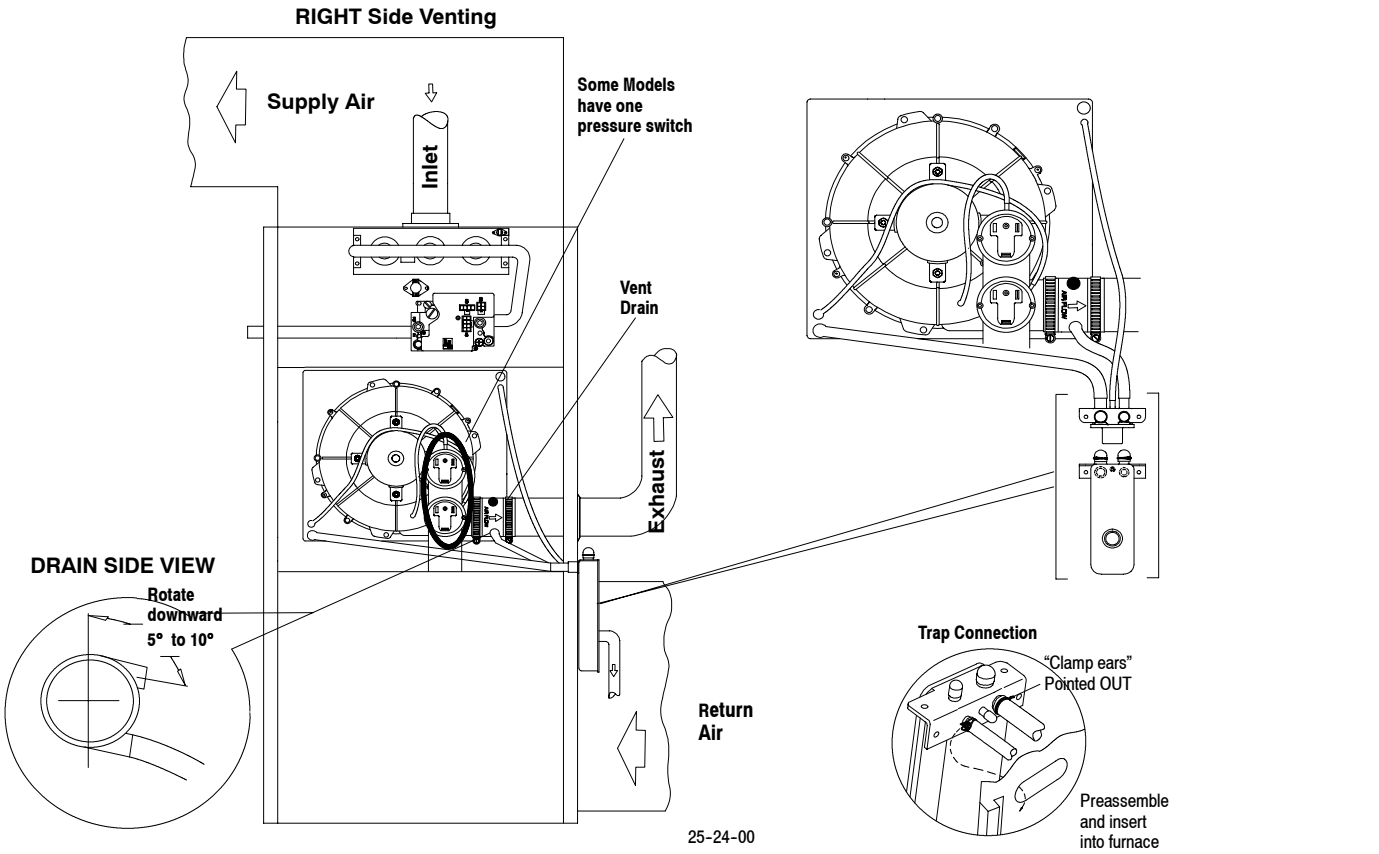

For right side mounted condensate trap, the pressure tap on the condensate trap MUST be connected to the unused pressure tap located on the upper right hand corner of the plastic transition box. Remove the plastic caps from the pressure taps on the condensate trap and the plastic transition and connect with the 14″ length of $^{5}/_{16}$″ OD rubber hose. (See **Figure 14**)

Connect the $^{5}/_{8}$″ OD rubber hose with the 90° bend to the lower drain stub on the vent fitting and secure with a $^{5}/_{8}$″ clamp.

Route the hose to the smaller drain stub on the condensate trap. Cut off excess hose and discard. Connect the hose to the drain stub on the trap and secure with a $^{5}/_{8}$″ clamp.

NOTE: Ensure hoses maintain a downward slope to the condensate trap with no kinking or binding for proper condensate drainage.

Figure 15 **Horizontal Left Installations (Single Pipe & Direct Vent N9MP1 & N9MP2 Models)**

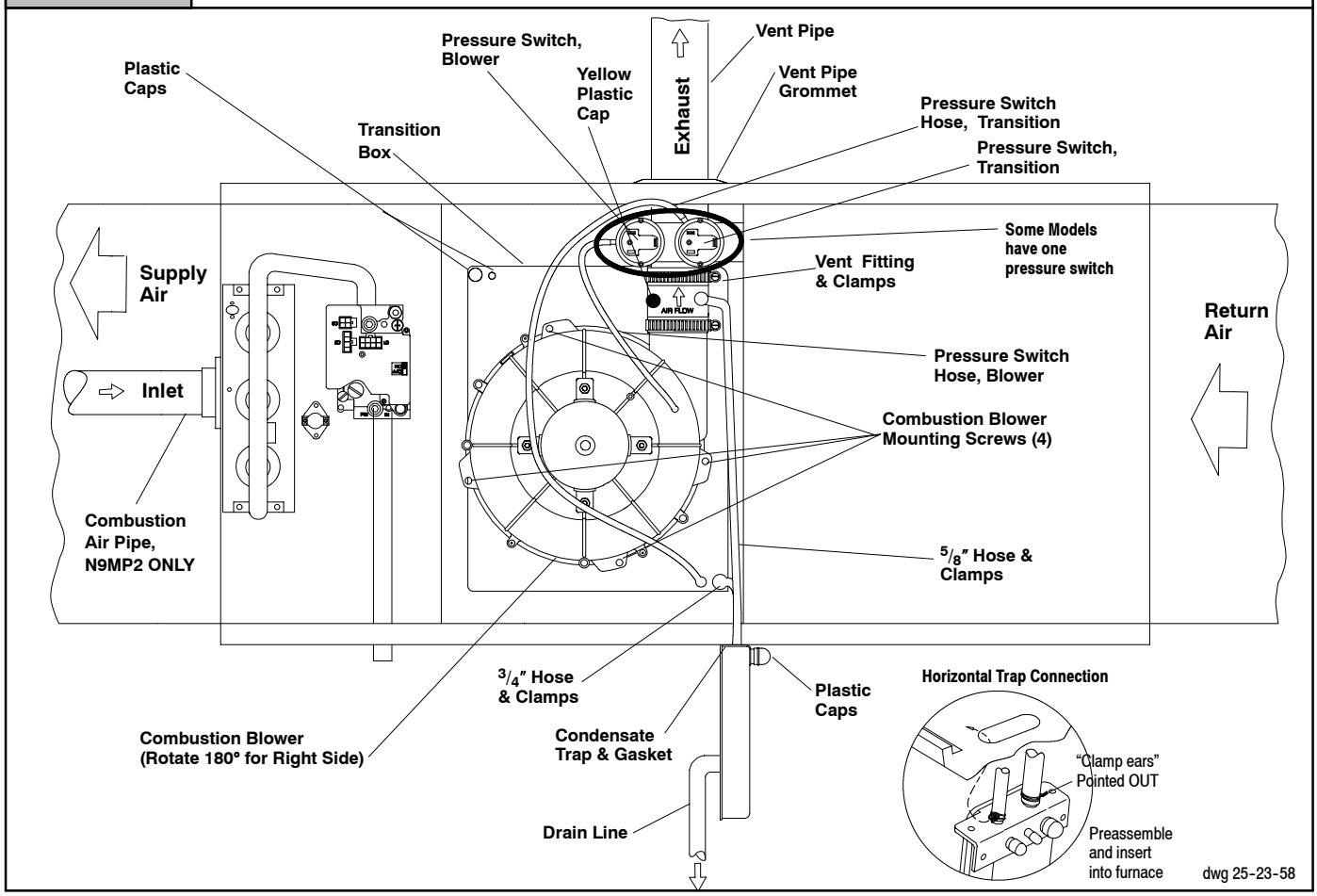

Horizontal Left Installations - (Single Pipe & Direct Vent N9MP1 & N9MP2 Models) (See Figure 15)

Note: For easier installation of the drain hoses and clamps to the condensate trap, follow the directions outlined below except do not make any clamp connections to any of the drain stubs and hoses until the hose routing and lengths have been determined. Remove the condensate trap and drain hoses from the furnace and secure the drain hoses to the drain stubs on the trap with the hose clamps (position the clamps as shown in **Figure 15).** Install the condensate trap/hose assembly to the furnace casing. Hook one side of the "clamp ears" on the drain stub through the hole in the casing and push the condensate trap into position. Secure with the two screws. Reconnect the drain hoses to the stubs on the vent fitting and the plastic transition and secure with the clamps.

Relocate the plastic caps and clamps on the condensate drain trap from the vertical drain stubs to the horizontal drain stubs. Secure the clamps tightly to prevent condensate leakage.

Mount the condensate drain trap in a vertical position to the left side of the furnace using the two screws and gasket that are provided. Note: The condensate trap will be located under the furnace in a vertical position when the furnace is placed horizontally on the left side. If needed, remove the hole plugs from the furnace side panel and relocated to the open set of holes in the opposite side panel.

Relocate the combustion blower on the plastic transition box. Remove the four(4) screws that secure the blower to the transition box. Rotate the blower 180° so the blower snout is pointing up and secure with the four(4) screws. Use caution to not over tighten the screws to prevent stripping out of the plastic mounting holes.

Ensure that the vent fitting is securely attached to the combustion blower using the rubber coupling and clamps.

NOTE: The vent fitting **MUST** be installed with the airflow marking arrow pointed toward the vent pipe.

Plug the left drain stub on the vent fitting with the yellow plastic cap.

Connect the $^3/_4$" OD rubber hose with the 90° bend to the large drain stub on the condensate trap and secure with a $^3/_4$" clamp.

Route the hose to the drain stub on the bottom of the plastic transition box. Cut off excess hose and discard. Connect the hose to the drain stub on the transition and secure with a $^3/_4$" clamp.

Connect the $^5/_8$" OD rubber hose with the 90° bend to the right drain stub on the vent fitting and secure with a $^5/_8$" clamp.

Route the hose to the smaller drain stub on the condensate trap. Cut off excess hose and discard. Connect the hose to the drain stub on the vent fitting and secure with a $^5/_8$" clamp.

NOTE: Ensure hoses maintain a downward slope to the condensate trap with no kinking or binding for proper condensate drainage.

Figure 16 Horizontal Right Installations (Single Pipe & Direct Vent N9MP1 & N9MP2 Models)

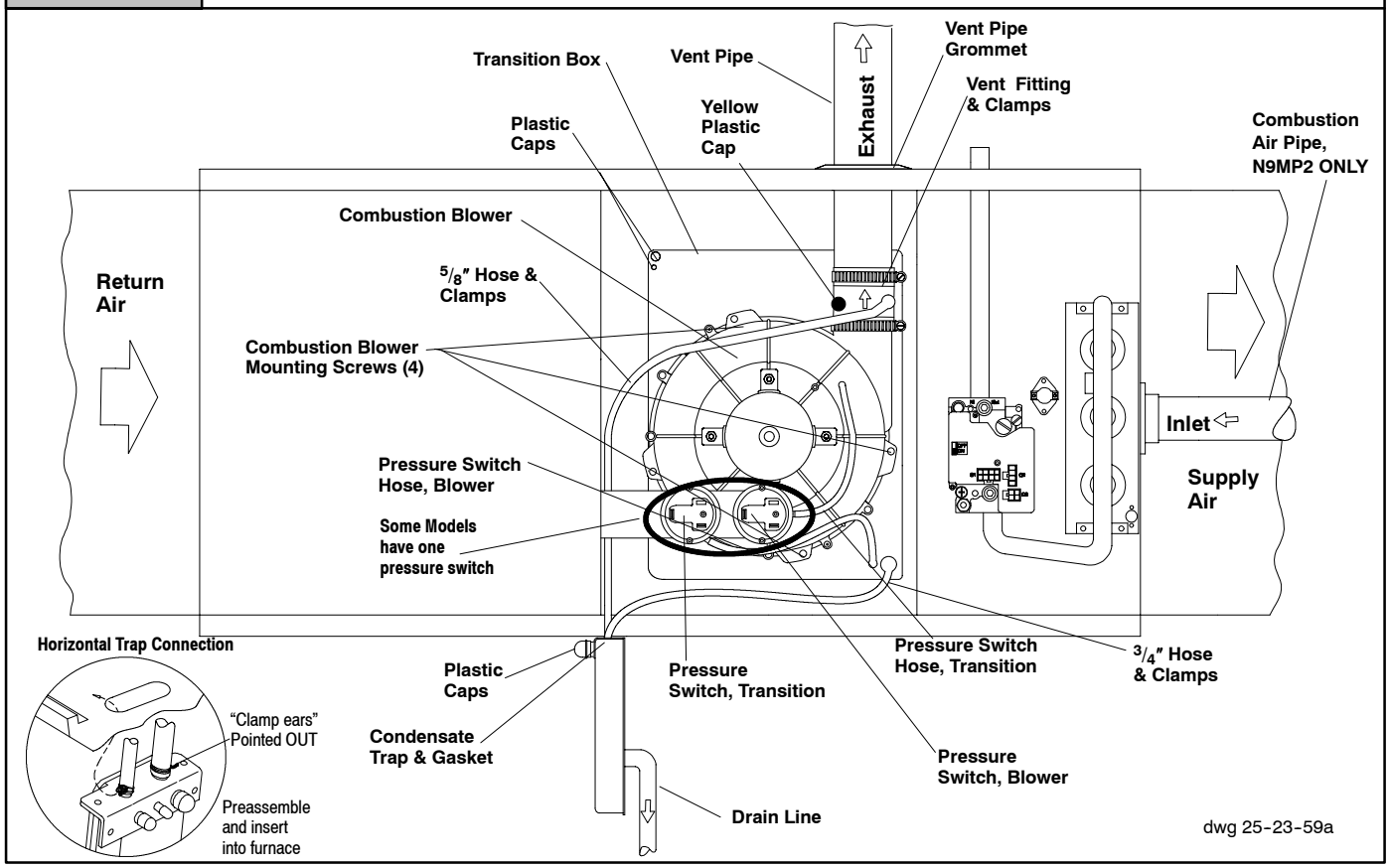

Horizontal Right Installations - (Single Pipe & Direct Vent N9MP1 & N9MP2 Models) (See Figure 16)

Note: For easier installation of the drain hoses and clamps to the condensate trap, follow the directions outlined below except do not make any clamp connections to any of the drain stubs and hoses until the hose routing and lengths have been determined. Remove the condensate trap and drain hoses from the furnace and secure the drain hoses to the drain stubs on the trap with the hose clamps (position the clamps as shown in **Figure 16).** Install the condensate trap/hose assembly to the furnace casing. Hook one side of the "clamp ears" on the drain stub through the hole in the casing and push the condensate trap into position. Secure with the two screws. Reconnect the drain hoses to the stubs on the vent fitting and the plastic transition and secure with the clamps.

Relocate the plastic caps and clamps on the condensate drain trap from the vertical drain stub to the horizontal drain stubs. Secure the clamps tightly to prevent condensate leakage.

Mount the condensate drain trap in a vertical position to the right side of the furnace using the two screws and gasket that are provided. Note: The condensate trap will be located under the furnace in a vertical position when the furnace is placed horizontally on the right side. If needed, remove the hole plugs from the furnace side panel and relocate to the open set of holes in the opposite side panel.

Ensure that the vent fitting is securely attached to the combustion blower using the clamps.

NOTE: The vent fitting **MUST** be installed with the airflow marking arrow pointed toward the vent pipe.

Plug the left drain stub on the vent fitting with the yellow plastic cap.

Remove the pressure switch hose from the upper stub on the plastic transition box.

Relocate the plastic caps on the stubs of the plastic transition from the lower stubs to the upper stubs and secure tightly with the clamps.

Route the pressure switch hose to the lower stub on the plastic transition box. Cut off excess hose and discard. Connect the pressure switch hose to the lower stub on the plastic transition box. Ensure that the hose is routed above the stub on the transition box so that condensate does not collect in the hose. NOTE: Failure to correctly install the pressure switch hose to the transition can adversely affect the safety control operation.

Connect the $^3/_4$" OD rubber hose with the 90° bend to the large drain stub on the condensate trap and secure with a $^3/_4$" clamp.

Route the hose to the drain stub on the bottom of the plastic transition box. Cut off excess hose and discard. Connect the hose to the drain stub on the transition and secure with a $^3/_4$" clamp.

Connect the $^5/_8$" OD rubber hose with the 90° bend to the right stub on the vent fitting and secure with a $^5/_8$" clamp.

Route the hose to the smaller drain stub on the condensate trap. Cut off excess hose and discard. Connect the hose to the drain stub on the trap and secure with a $^5/_8$" clamp.

NOTE: Ensure hoses maintain a downward slope to the condensate trap with no kinking or binding for proper condensate drainage.

Figure 17 **Downflow Installations (Single Pipe & Direct Vent N9MP1 & N9MP2 Models)**

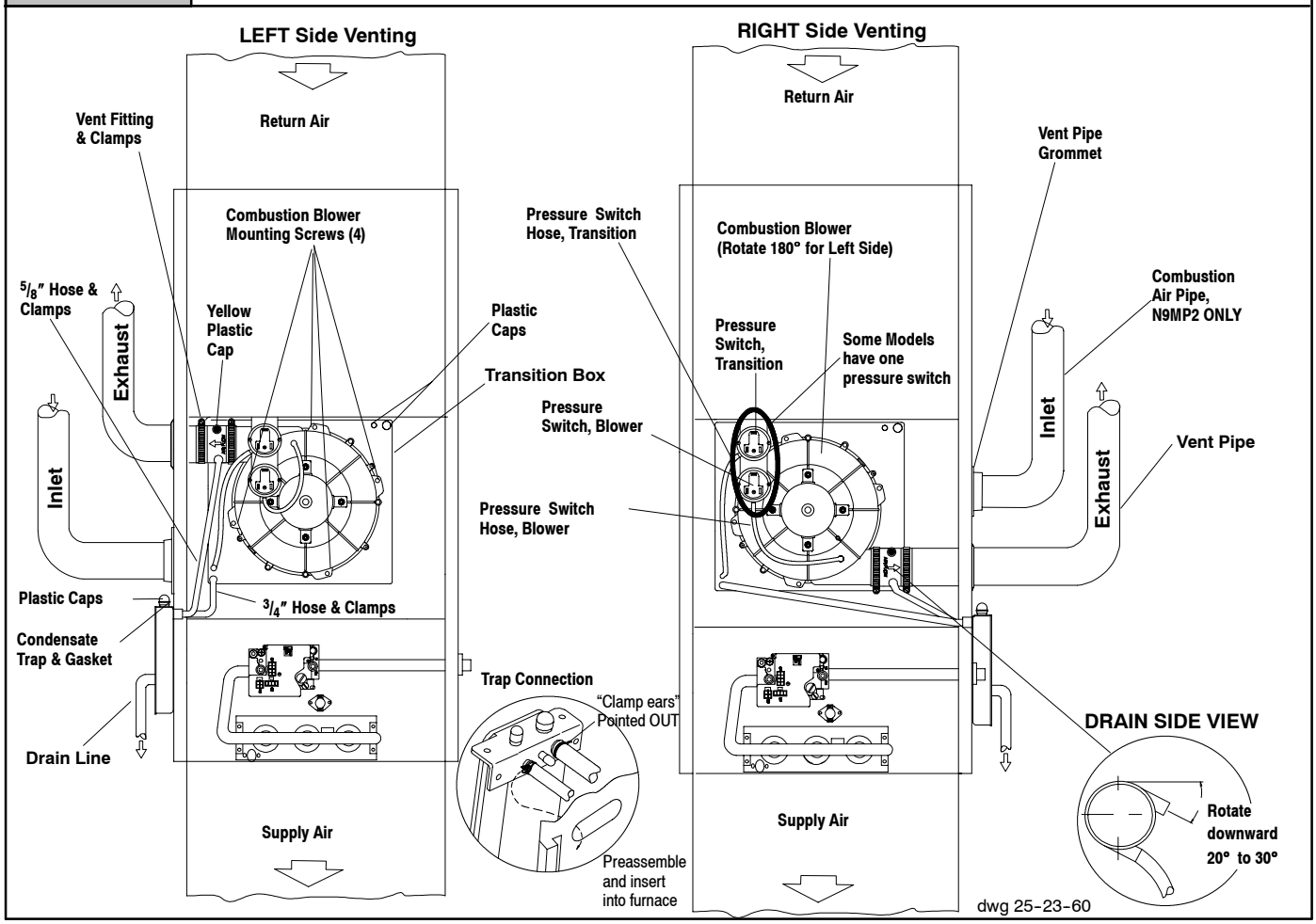

Downflow Installations - (Single Pipe & Direct Vent N9MP1 & N9MP2 Models) (See Figure 17)

Note: For easier installation of the drain hoses and clamps to the condensate trap, follow the directions outlined below except do not make any clamp connections to any of the drain stubs and hoses until the hose routing and lengths have been determined. Remove the condensate trap and drain hoses from the furnace and secure the drain hoses to the drain stubs on the trap with the hose clamps (position the clamps as shown in **Figure 17).** Install the condensate trap/hose assembly to the furnace casing. Hook one side of the "clamp ears" on the drain stub through the hole in the casing and push the condensate trap into position. Secure with the two screws. Reconnect the drain hoses to the stubs on the vent fitting and the plastic transition and secure with the clamps.

Mount the condensate drain trap in a vertical position to either the right or left side of the furnace using the two screws and gasket that are provided. If needed, remove the hole plugs from the furnace side panel and relocated to the open set of holes in the opposite side panel.

Ensure that the vent fitting is securely attached to the combustion blower using the rubber coupling and clamps.

This configuration allows right side venting from the furnace. If the left side venting is required, the combustion blower must be relocated on the plastic transition box. Remove the four(4) screws that secure the blower to the transition. Rotate the blower 180° and secure with the four(4) screws. Use caution to not over tighten the screws to prevent stripping out of the plastic mounting holes.

For right side venting, remove vent fitting assembly from combustion blower. Remove 90° elbow and rubber tubing from the vent fitting by loosening the clamp on the vent fitting. Securely attach vent fitting to combustion blower.

NOTE: The vent fitting **MUST** be installed with the airflow marking arrow pointed toward the vent pipe, with the drain stub at a 20° to 30° downward slope.

Plug the upper drain stub of the vent fitting with the yellow plastic cap.

Remove the pressure switch hose from the upper stub on the plastic transition box.

Relocate the plastic caps on the stubs of the plastic transition box from the lower stubs to the upper stubs and secure tightly with the clamps.

Route the pressure switch hose to the lower stub on the plastic transition box. Cut off excess hose and discard. Connect the pressure switch hose to the lower stub on the plastic transition box. **NOTE:** Failure to correctly install the pressure switch hose to the transition box can adversely affect the safety control operation.

Connect the $^3/_4$" OD rubber hose with the 90° bend to the drain stub on the bottom of the plastic transition box and secure with a $^3/_4$" clamp.

Route the hose to the large drain stub on the condensate trap. Cut off excess hose and discard. Connect the hose to the drain stub on the transition and secure with a $^3/_4$" clamp.

Connect the $^5/_8$″ OD rubber hose with the 90° bend to the left drain stub on the vent fitting and secure with a $^5/_8$″ clamp.

Route the hose to the smaller stub on the condensate trap. Cut off excess hose and discard. Connect the hose to the drain stub on the trap and secure with a $^5/_8$″ clamp.

NOTE: Ensure hoses maintain a downward slope to the condensate trap with no kinking or binding for proper condensate drainage.

Connecting Vent and Combustion Air Piping

⚠ WARNING

Poison carbon monoxide gas hazard.

Cement or mechanically seal all joints, fittings, etc. to prevent leakage of flue gases.

Failure to properly seal vent piping can result in death, personal injury and/or property damage.

Refer to the **Figure 8** through **Figure 17** that corresponds to the installation position of the furnace for the application.

Preassemble the vent and combustion air piping from the furnace to the vent termination. Do not cement the pipe joints until the pipe preassembly process is complete.

Combustion Air Pipe Connection (Dual Certified or Direct Vent)

Install the air intake coupling and gasket to the furnace with the four(4) screws. (See **Figure 8** through **Figure 17)**
Note: The air intake coupling and gasket can be installed to the top panel to the alternate air intake locations on either the left or right side panels of the furnace.

For downflow installation, the air intake coupling and gasket must be installed to the alternate air intake location on either the left or right side panels. Remove the 3″ hole plug from the side panel and relocate to the air intake hole in the top panel. Use the four screws to seal the four(4) mounting holes in the top panel next to the hole plug. Drill four(4) $^7/_{64}$″ diameter holes in the casing using the air intake coupling as the template.

The air intake coupling is sized for 2″ PVC pipe.

Install the combustion air pipe to the air intake coupling using RTV sealant to provide for future serviceability.

Vent Pipe Connection

Install the vent pipe grommet to the furnace panel. Locate the grommet in the furnace panel at a location directly away from the vent fitting on the combustion blower. The grommet snaps into the 3″ hole plug from the furnace panel. NOTE: Depending on the installation position, the vent pipe grommet will be installed to the top panel or to the alternate location on the side panels. If needed, remove the 3″ hole plug from the furnace panel and relocate to the open hole in the furnace panel. **See Figure 8** through **Figure 17.**

The vent pipe grommet is sized for 2″ PVC pipe.

Install the vent pipe to the vent fitting on the combustion blower using the clamp.

Note: The vent fitting MUST be installed with the air flow marking arrow pointed toward the vent pipe. (See Figure 18) Some installations require the vent fitting to be installed with a 20 to 30° downward slope. (See Figures 8 - 17)

Figure 18 — **Proper Sealing Procedure for Combustion Blower**

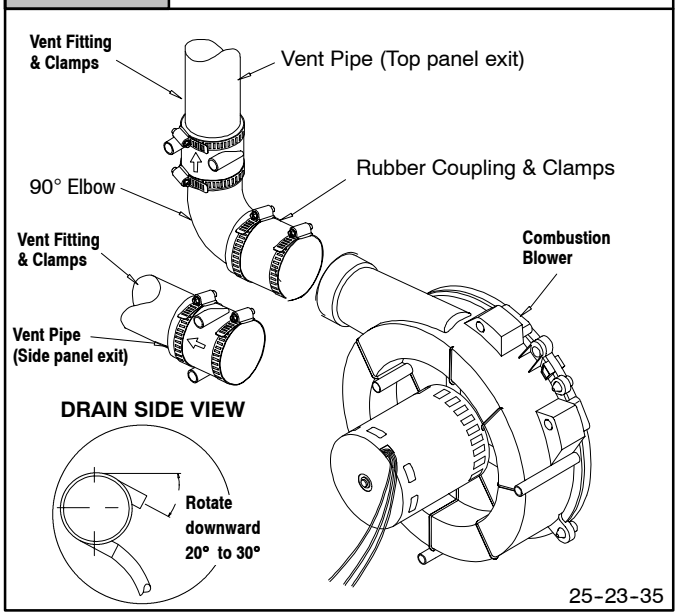

Joining Pipe and Fittings

⚠ WARNING

Fire hazard.

Provide adequate ventilation and do NOT assemble near heat source or open flame. Do NOT smoke while using solvent cements and avoid contact with skin or eyes.

Observe all cautions and warnings printed on material containers to prevent possible death, personal injury and/or property damage.

This furnace is approved for venting with Schedule 40 PVC, CPVC, ABS, Cellular Core pipe fittings and SDR-26 PVC.

NOTE: All PVC, CPVC, ABS, and Cellular Core pipe fittings, solvent cement, primers and procedures **MUST** conform to American National Standard Institute and American Society for Testing and Materials (ANSI/ASTM) standards.

- *Pipe and Fittings* - ASTM D1785, D2241, D2466, D2661, D2665, F-891, F-628
- *PVC Primer and Solvent Cement* - ASTM D2564
- *Procedure for Cementing Joints* - Ref ASTM D2855

NOTE: In order to create a seal that allows future removal of pipe, **RTV sealant MUST be used on the inlet pipe** where it joins to the furnace. PVC, CPVC, ABS, and Cellular Core pipe and cement may be used on all other joints.

CAUTION

Do NOT use solvent cement that has become curdled, lumpy or thickened and do NOT thin. Observe precautions printed on containers. For applications below 32° F., use only low temperature type solvent cement.

1. Cut pipe end square, remove ragged edges and burrs. Chamfer end of pipe, then clean fitting, socket and pipe joint of all dirt, grease, or moisture.

NOTE: Stir the solvent cement frequently while using. Use a natural bristle brush or the dauber supplied with the cement. The proper brush size is one inch.

2. After checking pipe and socket for proper fit, wipe socket and pipe with cleaner-primer. Apply a liberal coat of primer to inside surface of socket and outside of pipe. Do **NOT** allow primer to dry before applying cement.
3. Apply a thin coat of cement evenly in the socket. Quickly apply a heavy coat of cement to the pipe end and insert pipe into fittings with a slight twisting movement until it bottoms out.

NOTE: Cement **MUST** be fluid while inserting pipe. If **NOT,** recoat pipe.

4. Hold the pipe in the fitting for 30 seconds to prevent the tapered socket from pushing the pipe out of the fitting.
5. Wipe all excess cement from the joint with a rag. Allow 15 minutes before handling. Cure time varies according to fit, temperature and humidity.

Connecting Vent Pipes and Termination

NOTE: Combustion air intake and vent **MUST** terminate in the same atmospheric pressure zone. If installation is in a cold climate (sustained temperatures below 0°F), increase the minimum distance between vent pipe and air intake from 8″ to 18″.

CAUTION

Maintain a minimum of 36″ between combustion air inlet and clothes dryer vent. Terminate the combustion air intake as far as possible from any air conditioner, heat pump, swimming pool, swimming pool pumping, chlorinator or filtration unit.

⚠ WARNING

Poison carbon monoxide gas hazard.

Inlet and outlet pipes may NOT be vented directly above each other

Failure to properly vent this furnace can result in death, personal injury and/or property damage.

1. Install all couplings, nipples and elbows using proper procedures for **Joining Pipe and Fittings** and maintain spacing between vent and combustion air piping as indicated in **Figure 19** through **Figure 27** .

Figure 19 — **Sidewall Termination 12″ or More Above Snow Level or Grade Level**

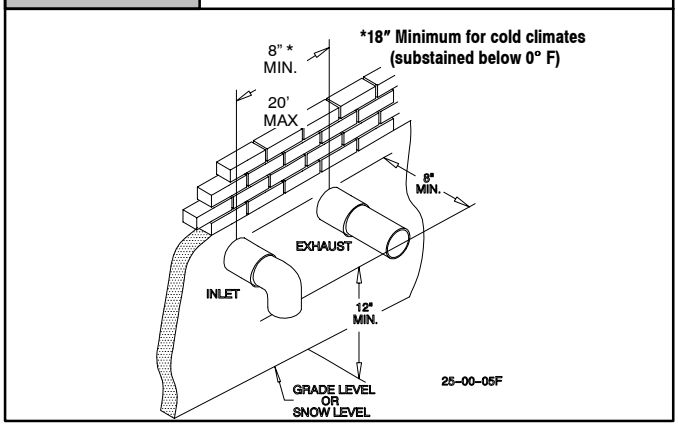

Horizontal Termination

1. Cut two holes. $2^1/_2$″ for 2″ pipe, 3″ for $2^1/_2$″ pipe, or $3^1/_2$″ for 3″ pipe. Do **NOT** make the holes oversized, or it will be necessary to add a sheet metal or plywood plate on the outside with the correct size hole in it.
2. Check hole sizes by making sure it is smaller than the couplings or elbows that will be installed on the outside. The couplings or elbows **MUST** prevent the pipe from being pushed back through the wall.
3. Extend vent pipe and combustion air pipe through the wall $^3/_4$″ to 1″ and seal area between pipe and wall.
4. Install the couplings, nipple and termination elbows as shown and maintain spacing between vent and combustion air piping as indicated in **Figure 19** and **Figure 20**.

A metal shield is recommended 18″ x 18″ min. or 18″ min. diameter around the vent termination at the exterior wall to protect the house exterior materials from flue product or condensation (freezing) damage.

Using Exterior Risers

1. Install elbows and pipe to form riser as shown in **Figure 20**.
2. Secure vent pipe to wall with galvanized strap or other rust resistant material to restrain pipe from moving.
3. Insulate pipe with Armaflex or equivalent moisture resistant closed cell foam insulation or Fiberglass insulation if boxed in and sealed against moisture.

Figure 20	Sidewall Termination with Exterior Risers to Get Above Snow Level or Grade Level

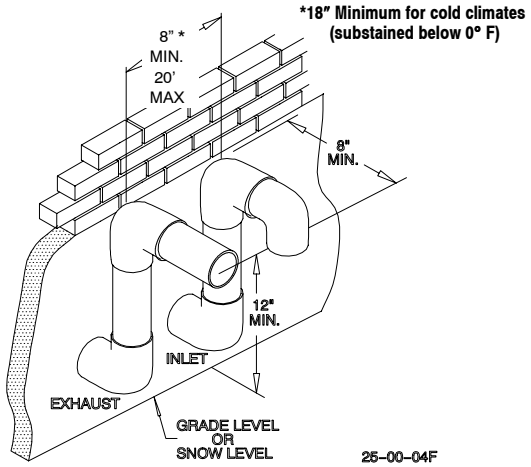

Vertical Termination

1. **Figure 21** shows the proper installation and clearances for vertical vent termination. The vertical roof termination should be sealed with a plumbing roof boot or equivalent flashing. The inlet of the intake pipe and end of the exhaust vent must be terminated no less than 12″ above the roof or snow accumulation level, and 12″ away from a vertical wall or other protrusion.
2. If the vent system is installed in an existing chimney make sure clearances shown in **Figure 21** are maintained. Horizontal section before the termination elbow can be extended on the inlet air to provide necessary clearance.

Figure 21	Rooftop Termination

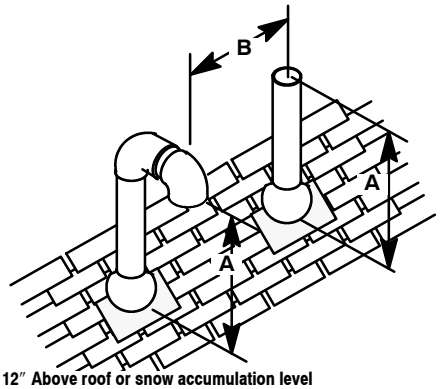

A = 12″ Above roof or snow accumulation level
B = 8″ Min., 20′ Maximum, except in areas with extreme cold temperatures (sustained below 0°F), the 18″ Min.

Vent Termination Shielding

Under certain wind conditions some building materials may be affected by flue products expelled in close proximity to unprotected surfaces. Sealing or shielding of the exposed surfaces with a corrosion resistant material (such as aluminum sheeting) may be required to prevent staining or deterioration. The protective material should be attached and sealed (if necessary) to the building before attaching the vent terminal.

Multi Vent Termination Clearances

When two (2) or more furnaces are vented near each other, each furnace must be individually vented.

Two (2) vent terminations may be installed as shown in **Figure 22, Figure 23, Figure 24, Figure 25, Figure 26** and **Figure 27**, but the next vent termination must be at least 36″ away from first 2 terminations. It is important that vent terminations be made as shown to avoid recalculation of flue gases.

Figure 22	Concentric Vent and Combustion-Air Roof Termination

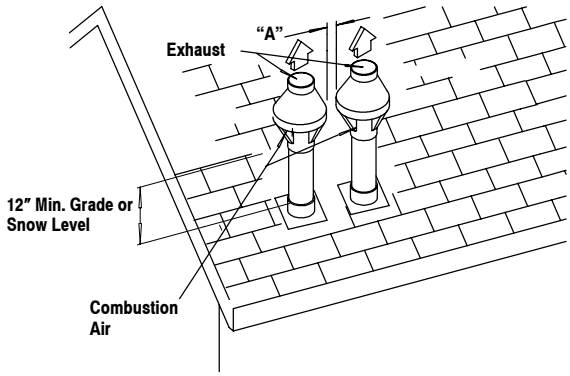

Dimension "A" is touching or 2″ maximum separation.

Figure 23	Concentric Vent and Combustion-Air Sidewall Termination

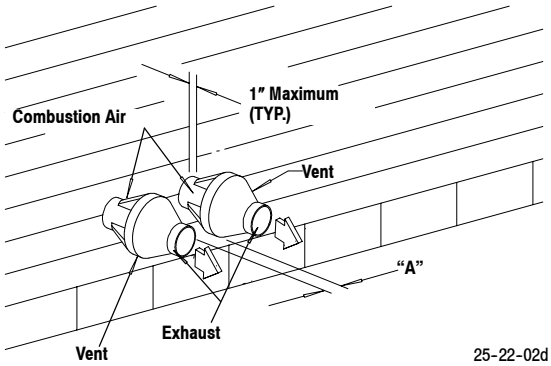

Dimension "A" is touching or 2″ maximum separation.

Figure 24	Sidewall Inlet Vent and Exhaust-Air Termination

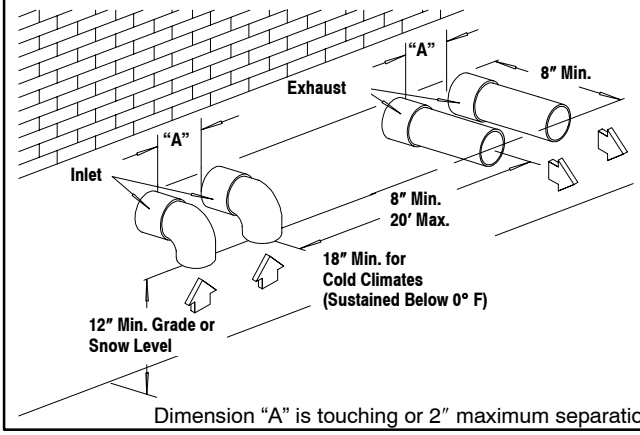

Dimension "A" is touching or 2″ maximum separation.

Figure 25 — **Sidewall Inlet Vent and Exhaust-Air Termination with Exterior Risers**

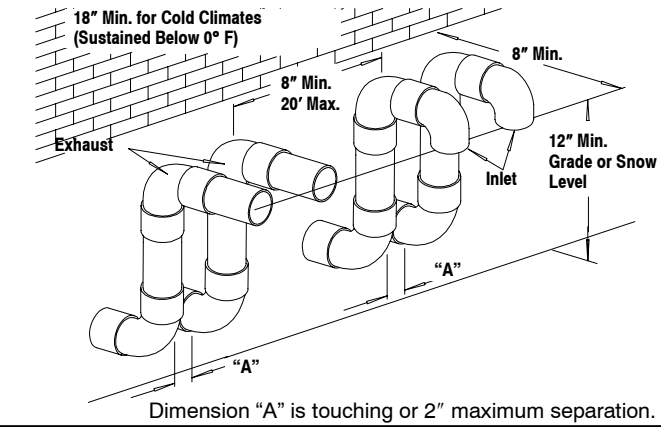

Dimension "A" is touching or 2″ maximum separation.

Figure 26 — **Rooftop Inlet Vent and Exhaust-Air Termination**

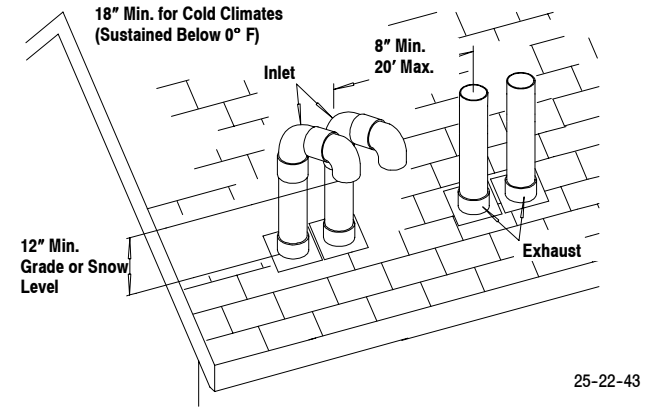

Figure 27 — **Recommended Alternate Installation for Sustained Cold Weather (-0° F & below)**

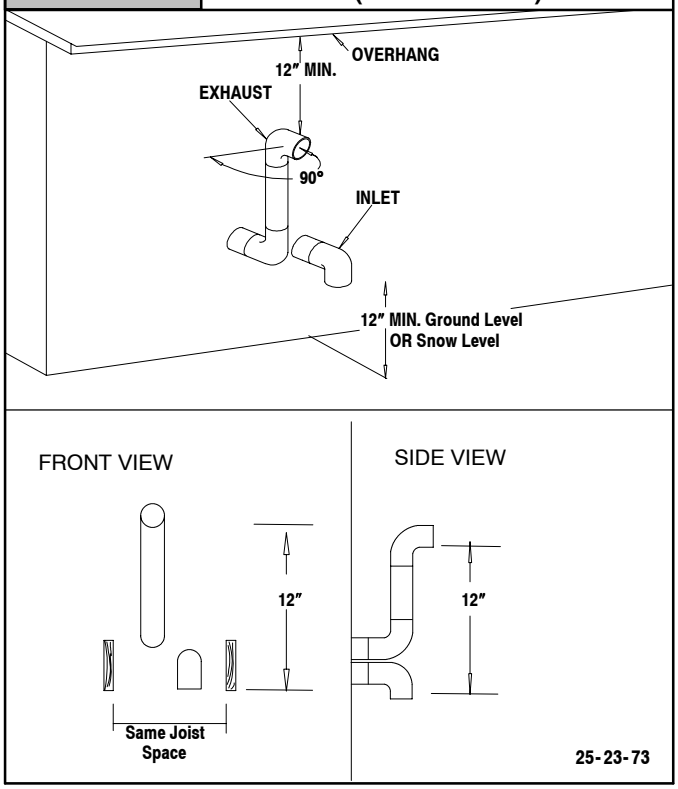

5. Gas Supply and Piping

⚠ WARNING

Poison carbon monoxide gas, fire and explosion hazard.

Models designated for Natural Gas are to be used with Natural Gas Only, unless properly converted to use with LP gas.

Failure to properly vent this furnace can result in death, personal injury and/or property damage.

NOTE: The rating plate is stamped with the model number, gas type and gas input rating. In addition, models manufactured for sale in Canada have orifice size information stamped on the rating plate.

Alternate BTUH Input Ratings (USA Only)

The input rating of these furnaces can be changed from the standard input rating to the alternate input rating shown in **Table 5,** by changing the main burner orifices. **NOTE:** The input rating ot 80,000 BTUH models cannot be changed from the standard input. Changing of burner orifices MUST be done by a qualified service technician. See section on changing orifices or following page.

Table 5 — **Alternate Input Ratings, USA ONLY.**

BTUH Standard Rating	BTUH Alternate Rating	Natural Gas Orifice	LP Gas Orifice
50,000	40,000	#44	#55
75,000	60,000	#44	#55
100,000	80,000	#44	#55
125,000	100,000	#44	#55

Supply Pressure

⚠ WARNING

Fire hazard.

Do NOT set input rating above that shown on rating plate.

Failure to properly set input pressure can result in death, personal injury and/or property damage.

1. Supply pressure can be checked using the $^1/_8$″ NPT port on the supply side of the gas valve.
2. Gas input to burners **MUST NOT** exceed the rated input shown on rating plate.
3. Do **NOT** allow minimum gas supply pressure to vary downward. Doing so will decrease input to furnace. Refer to **Table 6** for normal gas supply and manifold pressures.

Table 6	Gas Pressures Below 2000′			
Gas Type	Supply Pressure			Manifold Pressure
	Recommended	Max.	Min.	
Natural	7″	14″	4.5″	3.5″
LP	11″	14″	11″	10″

Important Note:

- **With Propane gas, the rated input is obtained when the BTU content is 2,500 BTU per cubic foot and manifold pressure set at 10″ W.C.**
- **If Propane gas has a different BTU content, orifices MUST be changed by licensed Propane installer.**
- **Measured input can NOT exceed rated input.**
- **Any major change in gas flow requires changing burner orifice size**.

MANIFOLD PRESSURE AND ORIFICE SIZE FOR HIGH ALTITUDE APPLICATIONS

Table 7	NATURAL GAS						
Heat Value Btu/Cu.Ft.	Elevation Above Sea Level						
	0-1999 (″ ·wc)	2000-2999 (″ ·wc)	3000-3999 (″ ·wc)	4000-4999 (″ ·wc)	5000-5999 (″ ·wc)	6000-6999 (″ ·wc)	7000-7999 (″ ·wc)
800	3.5	3.5	3.5	3.5	3.5	3.5	3.5
850	3.5	3.5	3.5	3.5	3.5	3.5	3.5
900	3.5	3.5	3.5	3.5	3.5	3.5	3.4
950	3.5	3.5	3.5	3.5	3.3	3.2	3.1
1000	3.5	3.4	3.3	3.2	3.0	2.9	2.8
1050	3.2	3.1	3.0	2.9	2.7	2.6	2.5
1100	2.9	2.8	2.7	2.6	2.5	2.4	2.3
Orifice Size	*	*	*	*	*	*	*
	* #42 Orifice size for 50,000, 75,000 100,00 & 125,000 BTUH models * #44 Orifice size for 80,000 BTUH model						

Gas Supply Pressure

Gas supply pressure should be within minimum and maximum values listed on rating plate. Pressures are usually set by gas suppliers.

Manifold Gas Pressure Adjustment

NOTE: Make adjustment to manifold pressure with burners operating.

⚠ WARNING

Fire or explosion hazard.

Turn OFF gas at shut off before connecting manometer.

Failure to turn OFF gas at shut off before connecting manometer can result in death, personal injury and/or property damage.

1. Remove the burner compartment door.
2. With gas **OFF**, connect manometer to tapped opening on gas valve. Use manometer with a 0 to 15″ water column range.
3. Turn gas **ON** and remove adjustment screw cover on gas valve. Turn counterclockwise to decrease pressure and clockwise to increase.
4. For altitudes up to 2000′, set pressure to value shown in **Table 6**, ± 0.3″ water column.
5. Connect manometer to the tapped opening on the outlet side of gas valve. Use manometer with a 0–15″ min. water column range.
6. Turn gas **ON,** fire the furnace and remove adjustment screw cover on gas valve.
7. Turn counterclockwise to decrease pressure and clockwise to increase.
8. Set pressure to value shown in **Table 6.** Refer to **Important Notes** in **Table 6**. Pressure is also listed on furnace rating plate.
9. When pressure is set, replace adjustment screw cover on gas valve.
10. Replace the burner compartment door.

General Derating Rules

1. For operation with natural gas at altitudes above 2,000′, orifice change and/or manifold pressure adjustment may be required to suit gas supplied. Check with gas supplier. If orifice sizing is needed, it should be based on reducing the input rating by 2% (natural) or 4% (LP) for each 1,000′ above sea level. See **Table 7** and **Figure 28** for required pressure change and/or orifice change for high altitudes.
2. For operation with LP gas at altitudes above 2,000′, gas orifices **MUST** be changed and manifold pressure **MUST** be *maintained* as per **Table 6.** For the 50,000, 75,000, 100,000 and 125,000 BTUH Orifice sizes are #54 for 0–2000′ above sea level, #55 for 2000′ –7000′ above sea level, and #56 for 7000′ –8000′ above sea level. For the 80,000 BTUH models, the orifice size is #55 for 0 – 4,000′ above seal level and #56 for 5,000′ – 8,000′ above sea level. Orifices can be ordered through your distributor. **(See Figure 28)**

NOTE: The derating of these units at 2% (Natural) and 4% (L.P.) has been tested and approved by AGA.

High Altitude Air Pressure Switch

Altitudes over 4,000′ require a different air pressure switch than the one installed at the factory. Check parts list for pressure switch and consult your distributor for part number and availability. In Canada, provincial codes may govern installation of switch. Check with governing authorities.

Changing Orifices for High Altitude

⚠ WARNING

Electrical shock, fire or explosion hazard.

Turn OFF electric power (at disconnect) and gas supply (at manual valve in gas line) when installing orifices. Installation of orifices requires a qualified service technician.

Failure to properly install orifices can result in death, personal injury and/or property damage.

NOTE: Main burner orifices can be changed for high altitudes.

1. Disconnect gas line from gas valve.
2. Remove manifold from furnace.
3. Remove the orifices from the manifold and replace them with properly sized orifices.
4. Tighten orifices so it is seated and gas tight. **(See Figure 28**)

Figure 28 **Changing Orifices**

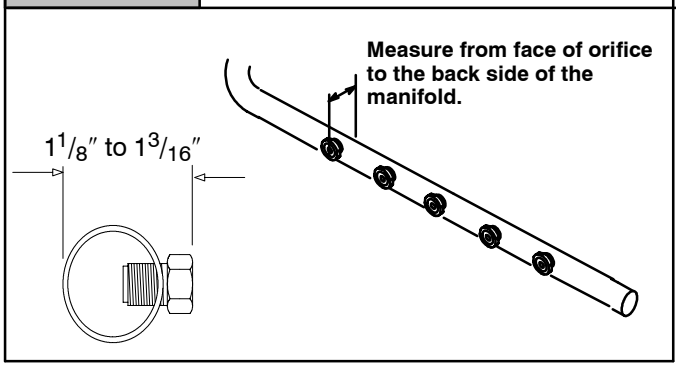

5. Reinstall manifold. Ensure burners do **NOT** bind on new orifices.

Figure 29 **Typical Gas Piping for Upflow**

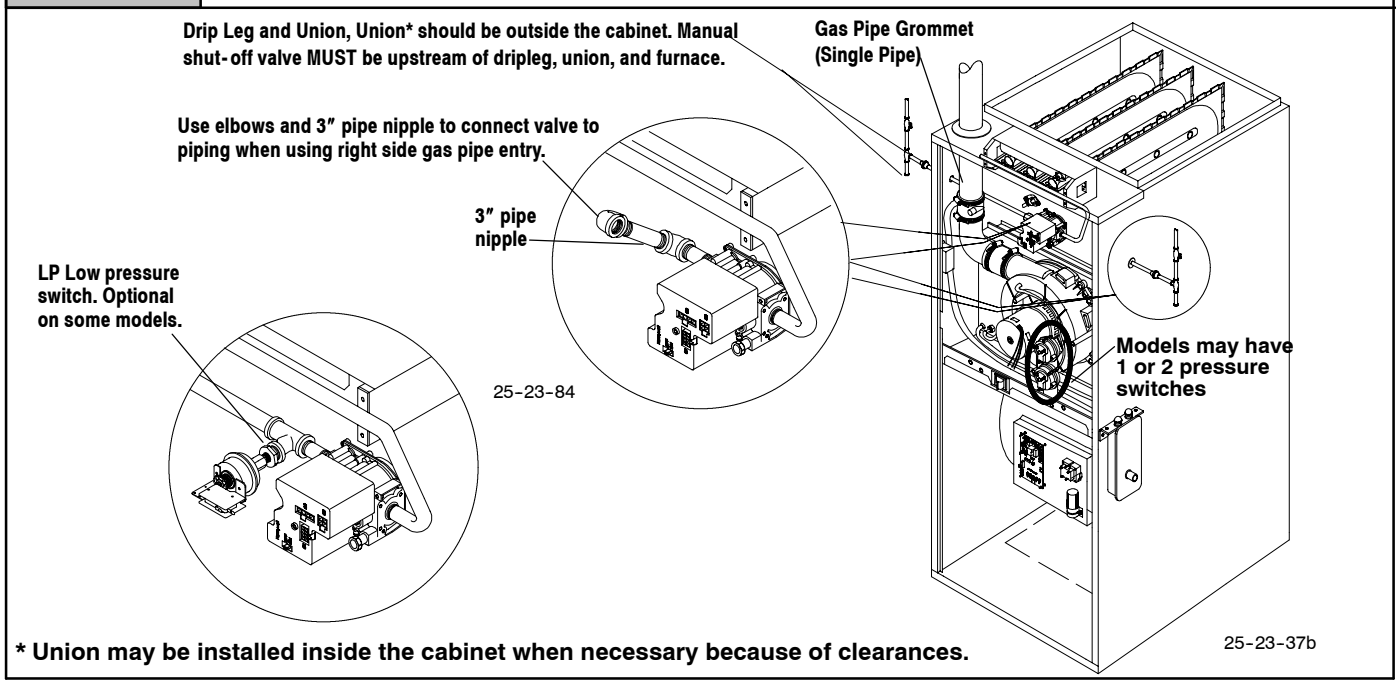

*** Union may be installed inside the cabinet when necessary because of clearances.**

Natural Gas Input Rating Check

NOTE: The gas meter can be used to measure input to furnace. Rating is based on a natural gas BTU content of 1,000 BTU's per cubic meter. Check with gas supplier for actual BTU content.

1. Make sure burner compartment door is in place before performing the following steps.
2. Turn **OFF** gas supply to all appliances and start furnace.

Example			
Natural Gas BTU Content	**No. of Seconds Per Hour**	**Time Per Cubic Foot in Seconds**	**BTU Per Hour**
1,000	3,600	48	75,000
1,000 x 3,600 ÷ 48 = 75,000 BTUH			

3. Time how many seconds it takes the smallest dial on the gas meter to make one complete revolution. Refer to **Example**.
4. Relight all appliances and ensure all pilots are operating.

NOTE: If meter uses a 2 cubic foot dial, divide results (seconds) by two.

Figure 30 **Typical Gas Piping for Downflow**

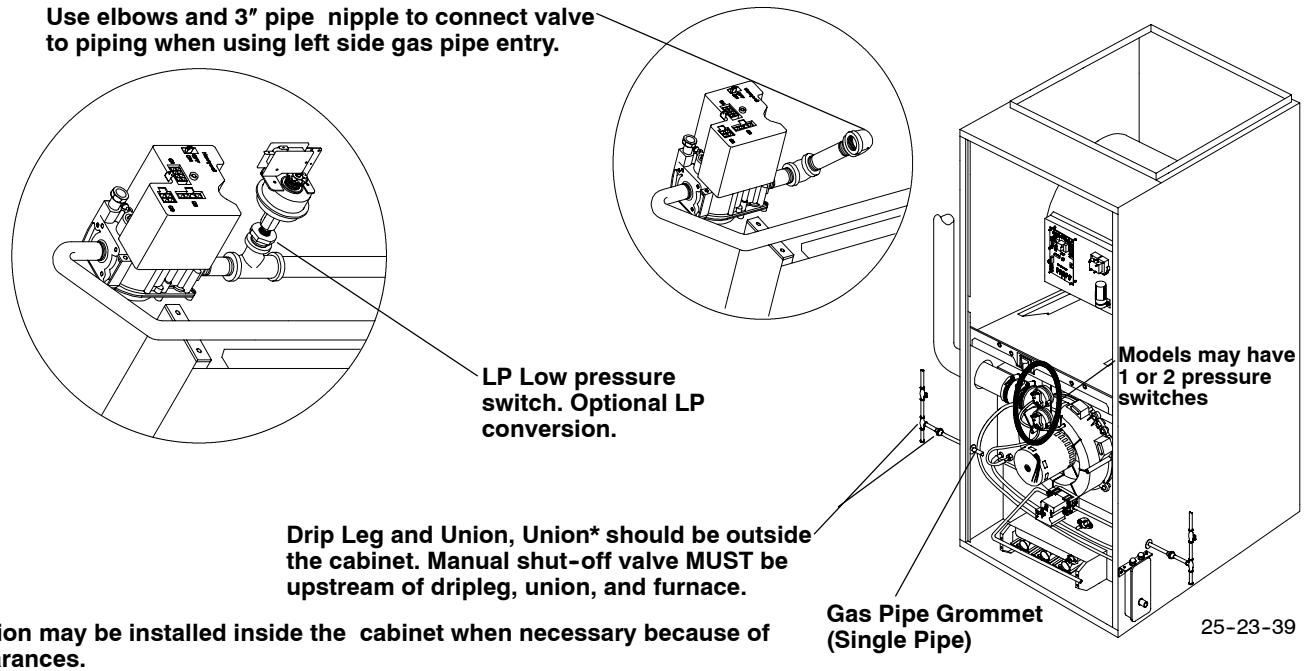

***Union may be installed inside the cabinet when necessary because of clearances.**

Gas Piping Requirements

NOTE: The gas supply line must be installed by a qualified service technician in accordance with all building codes, (In the state of Massachusetts, gas supply connections MUST be performed by a licensed plumber or gas fitter).

1. Properly size gas pipe to handle combined appliance load or run gas pipe directly from gas meter or LP gas regulator. Refer to NFGC and ANSI Z223.1 for proper gas pipe size.
2. Install correct pipe size for run length and furnace rating.
3. Measure pipe length from gas meter or LP second stage regulator.

NOTE: Refer to **Figure 29** or **Figure 30** for the general layout at the furnace. The rules listed apply to natural and LP gas pipe installations.

NOTE: On the Dual Certified or Direct Vent models, install the gas pipe grommet to the furnace side panel with the gas pipe entry. If needed, remove the 2″ hole plug and relocate to the open hole in the furnace side panel.

4. Use black iron or steel pipe and fittings or other pipe approved by local code.

NOTE: The use of copper tubing for gas piping is NOT approved by the state of Massachusetts.

5. Use ground joint unions and install a drip leg no less than 3″ long to trap dirt and moisture before it can enter gas valve.
6. Use two pipe wrenches when making connections to prevent gas valve from turning.
7. Install a manual shut-off valve external to furnace casing and tighten all joints securely.

Additional LP Connection Requirements

1. Have a licensed LP gas dealer make all connections at storage tank and check all connections from tank to furnace.
2. If copper tubing is used, it **MUST** comply with limitation set in National Fuel Gas Code or CGA codes.
3. Two-stage regulation of LP gas is recommended.

Final Check

1. The furnace and its individual shut-off valve must be disconnected from the gas supply piping system during any pressure testing of that system at test pressures in excess of $^1/_2$″ PSIG.

The furnace must be isolated from the gas supply piping system by closing its individual manual shut-off valve during any pressure testing of the gas supply piping system at test pressures equal to or less than 1/2″ PSIG.

2. Test all pipes for leaks.
3. Gas pressure **MUST NOT** exceed 1/2″ PSIG to gas valve. Checking gas piping above 1/2″ PSIG requires the furnace and manual shut-off valve to be disconnected during testing.
4. Apply soap suds (or a liquid detergent) to each joint. Bubbles forming indicate a leak.
5. Correct even the smallest leak at once.
6. If orifices were changed, make sure they are checked for leakage.

6. Electrical Wiring

⚠ WARNING

Electrical shock hazard.

Turn OFF electric power at fuse box or service panel before making any electrical connections and ensure a proper ground connection is made before connecting line voltage.

Failure to do so can result in death, personal injury and/or property damage.

Power Supply Wiring

The furnace **MUST** be electrically wired and grounded in accordance with local codes, or in the absence of local codes with the latest edition of The National Electric Code, ANSI NFPA 70 and/or The Canadian Electric Code CSA C22.1.

Field wiring connections must be made inside the furnace connection box. A suitable strain relief should be used at the point the wires exit the furnace casing.

Copper conductors must be used. Line voltage wires should be sized for the input amps stated on the rating plate. Furnace should be connected to its own separate circuit.

Thermostat

Thermostat location has an important effect on the operation of the unit. Follow instructions included with thermostat for correct mounting and wiring.

Low voltage connections to furnace must be made on terminal board to fan control.

Set thermostat heat anticipator in accordance with the *Technical Support Manual*.

Optional Equipment

All wiring from furnace to optional equipment **MUST** conform to local codes or, in the absence of local codes with the latest edition of The National Electric Code, ANSI NFPA 70 and/or The Canadian Electric Code CSA C22.1. Install wiring in accordance with manufacturer's instructions. The wiring **MUST** have a minimum temperature rating of 105° C.

Humidifier/Electronic Air Cleaner

The furnace is wired for humidifier and/or electronic air cleaner connection.

CAUTION

Do NOT exceed 115V/0.8 amp. maximum current load for both the EAC terminal and the HUM terminal combined.

NOTE: The humidifier will be powered when the furnace is fired and the circulating air blower comes on. The electronic air cleaner will be powered anytime the air circulating blower is energized. However, the electronic air cleaner is **NOT** energized during continuous fan operation controlled by the electronic fan control.

Fan Control

The fan control is preset at the factory with a fixed blower **ON** delay of 30 seconds in the heating mode. The blower **OFF** timing is preset at 140 seconds. If desired, the fan **OFF** delay can be reset to obtain the longest delay times while still maintaining comfort levels. See "Furnace Wiring Diagram" .

Fan Delay DIP Switch Settings

COOL ON DELAY: 6 SEC.
COOL OFF DELAY: 60 SEC.
HEAT ON DELAY: 30 SEC.

HEAT OFF DELAY

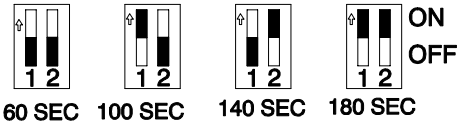

25-23-47

Figure 31 **Electrical Connections**

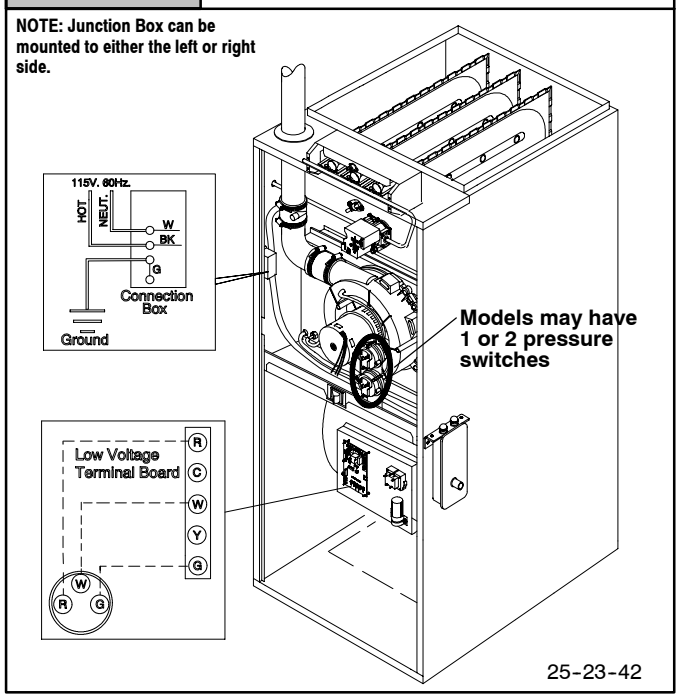

Control Center Fuse

The 24V circuit contains a 5-amp, automotive-type fuse located on fan timer board. (See **Figure 32**) Any electrical shorts of 24V wiring during installation, service, or maintenance may cause fuse to blow. If fuse replacement is required, use only a fuse of identical size (5 amp.)

Figure 32 **Fan Timer Connections**

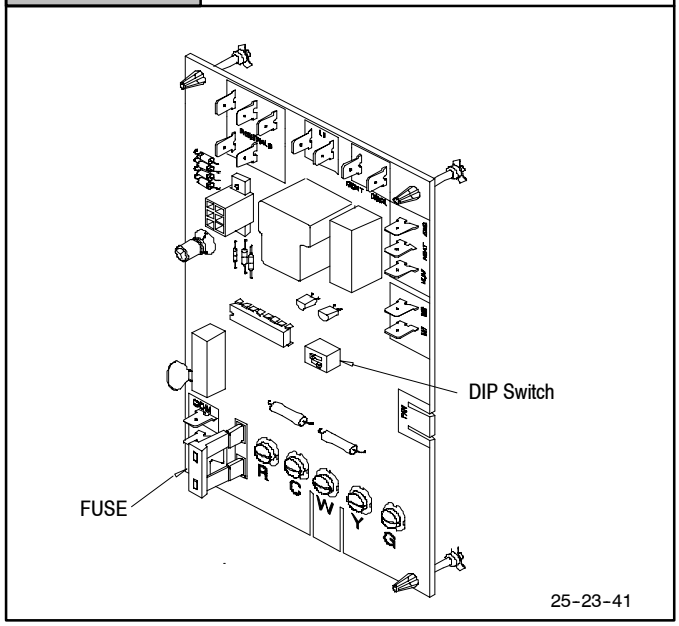

7. Ductwork and Filter

⚠ WARNING

Poison carbon monoxide gas hazard.

Do NOT draw return air from inside a closet or utility room. Return air duct MUST be sealed to furnace casing.

Failure to properly seal duct can result in death, personal injury and/or property damage.

Installation

NOTE: Design and install air distribution system to comply with Air Conditioning Contractors of America manuals and/or NFPA pamphlets 90A and 90B or other approved methods that conform to local codes and good trade practices.

1. When furnace supply ducts carry air outside furnace area, seal return air duct to furnace casing and terminate duct outside furnace space .
2. Install air conditioning cooling coil (evaporator) on outlet side of furnace.
3. For furnaces installed without a cooling coil it is recommended that the outlet duct be provided with a removable access panel. This panel should be accessible when the furnace is installed so the exterior of the heat exchanger can be viewed for inspections. The access panel **MUST** be sealed to prevent leaks.
4. If separate evaporator and blower units are used, install good sealing dampers for air flow control. Chilled air going through the furnace could cause condensation and shorten the furnace life.

NOTE: Dampers (field supplied) can be either automatic or manual. Manually operated dampers **MUST** be equipped with a means to prevent furnace or air conditioning operation unless damper is in the full heat or cool position.

⚠ WARNING

Poison carbon monoxide gas hazard.

Cool air passing over heat exchanger can cause condensate to form resulting in heat exchanger failure.

This could result in death, personal injury and/or property damage.

Connections

NOTE: On upflow installations, return air can enter through either side, both sides, or the bottom. On horizontal or downflow installations the return air must enter through the knockout opening in the

lower panel of the furnace. Return air **can not** enter through rear of the furnace. When the furnace is located in an area near or adjacent to the living area, the system should be carefully designed with returns to minimize noise transmission through the return grille. Any blower moving a high volume of air will produce audible noise which could be objectionable to when the unit is located very close to living areas. It is advisable to route the return air ducts under the floor or through the attic.

1. For side connections using a 16″ x 25″ filter, cut out the embossed area shown in **Figure 33**. This will provide a $14^1/_2$″ x $22^1/_2$″ approximate opening.

Figure 33 Side Return Air Cutout

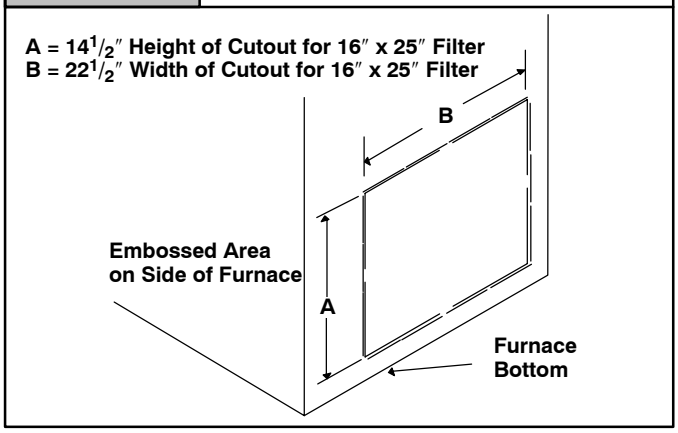

NOTE: Furnaces with 5 TONS cooling rating **require** two(2) side returns or one side return with bottom return.

2. Bottom returns can be made by removing the knockout panel in the furnace base. Do **NOT** remove knock-out except for a bottom return.
3. Installation of locking-type dampers are recommended in all branches, or in individual ducts to balance system's air flow.
4. Non-combustible, flexible duct connectors are recommended for return and supply connections to furnace.
5. If air return grille is located close to the fan inlet, install at least one, 90° air turn between fan and inlet grille to reduce noise.

NOTE: To further reduce noise, install acoustical air turning vanes and/or line the inside of duct with acoustical material.

Sizing

Existing or new ductwork **MUST** be sized to handle the correct amount of airflow for either heating only or heating and air conditioning.

Insulation

1. Insulate ductwork installed in attics or other areas exposed to outside temperatures with a minimum of 2″ insulation and vapor barrier.
2. Insulate ductwork in indoor unconditioned areas with a minimum of 1″ insulation with indoor type vapor barrier.

Filters

A Filter **must** be used:

Filters are not supplied with these furnaces, but can be purchased from dealer.

Use either filter type:

- Washable, high velocity filters are based on a maximum air flow rating of 600 FPM.
- Disposable, low velocity filters are based on a maximum air flow of 300 FPM when used with filter grille.

NOTE: Disposable, low velocity filters may be replaced with washable, high velocity filter providing they meet the minimum size areas. Washable, high velocity filters can be replaced **ONLY** with same type and size.

Figure 34 Side Mounted Filter Rack

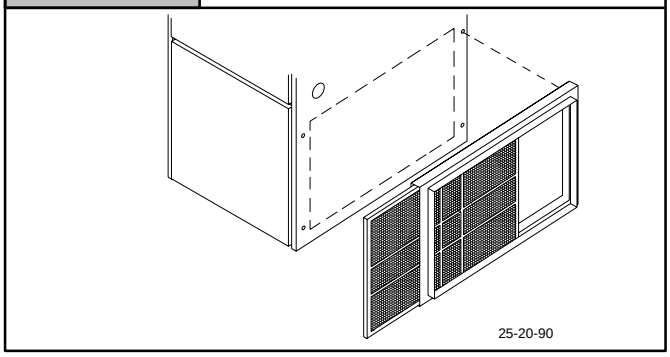

Filter Installation using Optional Filter Rack

When installing or removing a bottom mounted filter, slide the two side filter clips to the back of the furnace **BEFORE** installing or removing. This will allow the filter to clear the front raised edge of the furnace. Insert filter into side clips first and push filter back until it is fully engaged into back clip. When filter is in place, slide clips back into place midway on filter as shown in **Figure 35.**

Figure 35 Bottom Mounted Filter Rack

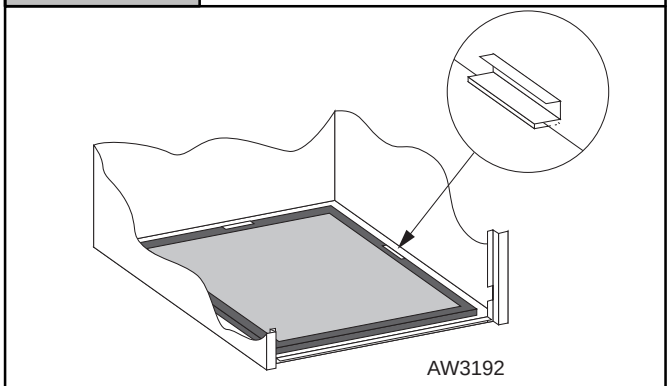

Slide filter clips towards back before removing

Refer to **Figure 36** and for guidelines to install filters. Furnaces which require larger filter media and have limited clearances on one side of furnace, require a standoff filter rack, see **Figure 36**, available from your distributor.

Figure 36	Standoff Filter Rack

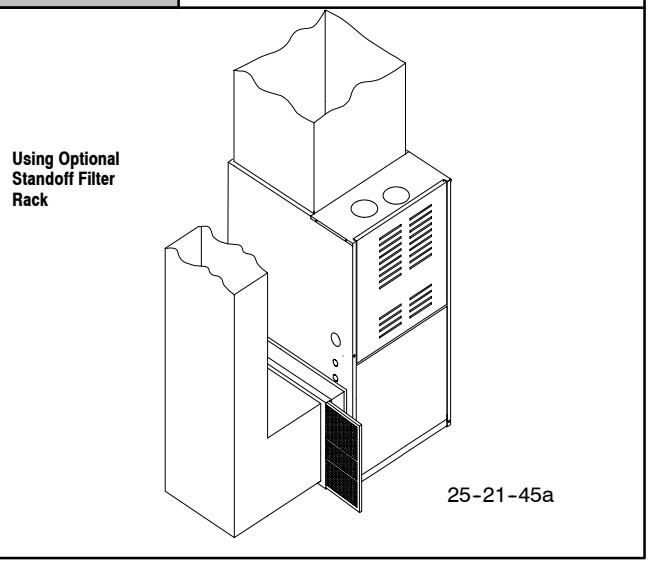

CAUTION

If filters are only suitable for heating application, advise homeowner that filter size may need to be increased if air conditioning is added.

Addition Of Air Conditioning

When a refrigeration coil is used in conjunction with this unit, it must be installed on the discharge side of the unit to avoid condensation on the heat exchanger. The coil installation instructions must be consulted for proper coil location and installation procedures. With a parallel flow arrangement, dampers must be installed to prevent chilled air from entering the furnace. If manually operated dampers are used, they must be equipped with a means to prevent operation of either unit unless the damper is in full heat or full cool position.

A 3″ clearance is required on the right side of the furnace in order to run the condensate drain line. Copper, iron or plastic tubing may be used for the condensate drain line.

Downflow Furnace Installation Non-Combustible Floor Installation

Fabricate a plenum to the dimensions given in **NO TAG**, for the furnace outlet. Plenum should be flanged, approximately $^3/_4$″ for support.

Note: The three(3) screws in the top panel of the furnace next to the duct flange **MUST** be removed to provide serviceability of the primary heat exchangers in the downflow installation

1. Position plenum through the floor and set the furnace over the opening in the floor. If necessary, grout around the base to seal air leaks between the base and the floor.

Combustible Floor Installation

⚠ WARNING

Fire Hazard.

Place furnace on noncombustible subbase on downflow applications, unless installing on non-combustible flooring.

Failure to install unit on noncombustible subbase can result in death, personal injury and/or property damage.

Subbase for Combustible Floor

NOTE: The three(3) screws in the top panel of the furnace next to the duct flange **MUST** be removed to provide serviceability of the primary heat exchangers in the downflow installation

Note: When using the subbase for combustible floors, the discharge air duct flanges on the furnace MUST be broken down to provide proper fit up to the subbase. Use duct pliers to bend the duct flanges flat onto the furnace casing. DO NOT bend the duct flanges inward (toward the heat exchangers) as air flow restrictions may occur.

The Subbase for Combustible Floors **MUST** be used when a downflow furnace is set on a combustible floor, even when the furnace is installed on a coil box.

1. Cut the opening in the floor according to **Table 8**. The hole in the floor must be cut to the dimensions listed in **Table 8** since the base is equipped with locating tabs that center the base over the opening.

The opening in the base is $1^1/_4$″ shorter and $1^1/_8$″ narrower than the recommended size of the opening in the floor. This is done to maintain clearance between the floor and the plenum.

2. Fabricate the plenum to the dimensions given in **Table 8**. Note that the dimensions given are outside dimensions.

Table 8	Subbases for Combustible Floors Dimensions									
Subbase for Combustible Floors Part Number	Subbase for Combustible Floor Dimensions				Opening In Floor		Opening In Base For Plenum		Typical Plenum Dimensions	
	H*	J*	K**	L	M	N	P	R	S	T
Furnace Subbase										
NAHH001SB	$15\frac{11}{16}$	$28\frac{3}{4}$	$14\frac{9}{16}$	16	$16\frac{1}{4}$	$14\frac{5}{8}$	15	$13\frac{1}{2}$	15	$13\frac{1}{2}$
NAHH002SB	$19\frac{5}{16}$	$28\frac{3}{4}$	$18\frac{3}{16}$	16	$16\frac{1}{4}$	$18\frac{1}{4}$	15	$17\frac{1}{8}$	15	$17\frac{1}{8}$
NAHH003SB	$22\frac{5}{16}$	$28\frac{3}{4}$	$21\frac{13}{16}$	16	$16\frac{1}{4}$	$21\frac{7}{8}$	15	$19\frac{3}{4}$	15	$19\frac{3}{4}$
NAHH010SB	$24\frac{3}{4}$	$28\frac{3}{4}$	$23\frac{9}{16}$	$16\frac{1}{4}$	$16\frac{1}{4}$	$23\frac{5}{8}$	15	$22\frac{1}{2}$	15	$22\frac{1}{2}$
Subbase for Coil Cabinets										
NAHH004SB	$15\frac{11}{16}$	$20\frac{9}{16}$	$14\frac{9}{16}$	$16\frac{1}{4}$	$16\frac{1}{4}$	$14\frac{5}{8}$	15	$13\frac{1}{2}$	15	$13\frac{1}{2}$
NAHH005SB	$19\frac{5}{16}$	$20\frac{9}{16}$	$18\frac{3}{16}$	$16\frac{1}{4}$	$16\frac{1}{4}$	$18\frac{1}{4}$	15	$17\frac{1}{8}$	15	$17\frac{1}{8}$
NAHH006SB	23	$20\frac{9}{16}$	$21\frac{13}{16}$	$16\frac{1}{4}$	$16\frac{1}{4}$	$21\frac{7}{8}$	15	$19\frac{3}{4}$	15	$19\frac{3}{4}$
NAHH009SB	$24\frac{11}{16}$	$20\frac{9}{16}$	$23\frac{9}{16}$	16	$16\frac{1}{4}$	$23\frac{5}{8}$	15	$22\frac{1}{2}$	15	$22\frac{1}{2}$

* Outside Dimension
** Base Spacer Side To Side

3. Set the base over the opening in the floor, centering it over the opening. Fasten the base to the floor with screws or nails. See **Figure 37, Figure 38** and **Figure 39**.

Figure 37 **Furnace Subbase**

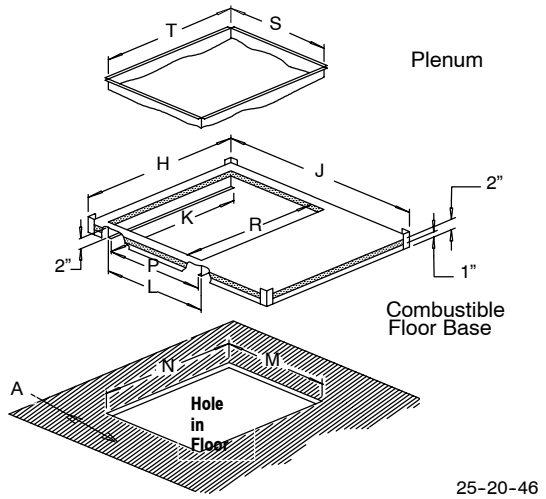

A = 4 1/4” Minimum clearance from back of hole to wall or other obstruction.

Figure 38 **Coil Cabinet Subbase**

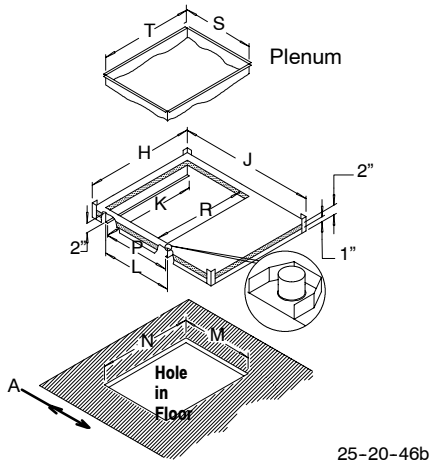

A = 4 1/4” Minimum clearance from back of hole to wall or other obstruction.

4. Drop the plenum through the opening in the base. The flange of the plenum should rest on top of the subbase.
5. Position furnace or coil cabinet and furnace on subbase so it aligns between the locating tabs.

Figure 39 **Setting the Subbase**

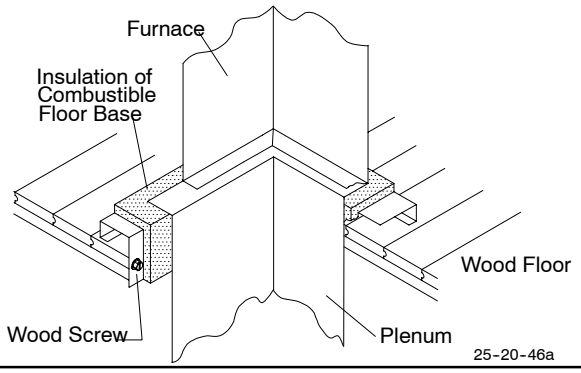

This subbase for combustible floors has been designed so that the height of the subbase raises the downflow coil off the floor to allow easy installation of the condensate drain. See **Figure 40**.

Figure 40	Condensate Line Raised by Base

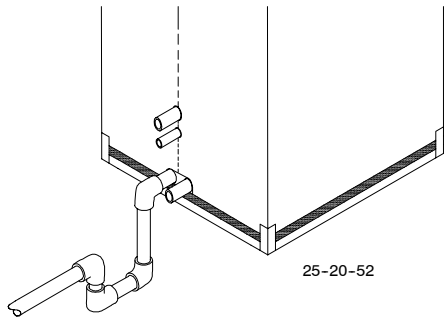

8. Checks and Adjustments

Startup

NOTE: Refer to the start-up procedures in the "*User's Information Manual*" or to the "*Operating Instructions Label*" on the furnace.

CAUTION

If any sparks, odors or unusual noises occur, immediately shut OFF power to furnace. Check for wiring errors or obstruction to blower.

Gas Supply Pressure

Gas supply pressure should be within minimum and maximum values listed on rating plate. Pressures are usually set by gas suppliers.

Manifold Gas Pressure Adjustment

NOTE: Make adjustment to manifold pressure with burners operating.

⚠ WARNING

Fire or explosion hazard.

Turn OFF gas at shut off before connecting manometer.

Failure to turn OFF gas at shut off before connecting manometer can result in death, personal injury and/or property damage.

1. Remove the burner compartment door.
2. With gas **OFF**, connect manometer to tapped opening on gas valve. Use manometer with a 0 to 15″ water column range.
3. Turn gas **ON** and remove adjustment screw cover on gas valve. Turn counterclockwise to decrease pressure and clockwise to increase.
4. For altitudes up to 2000′, set pressure to value shown in **Table 6**, ± 0.3″ (8mm) water column. For altitudes of 2000′ to 8000′, see Section 5 for correct pressure setting.

Adjust Pilot Burner

The furnace has a pilot flame to light the main burner. The flame should surround $^3/_8$″ to $^1/_2$″ of the flame sensor. See **Figure 41.** To adjust, remove cap from pilot adjusting screw on gas valve. Turn screw counterclockwise to increase or clockwise to decrease flame as required. Replace adjusting screw cap.

Figure 41	Pilot Burner

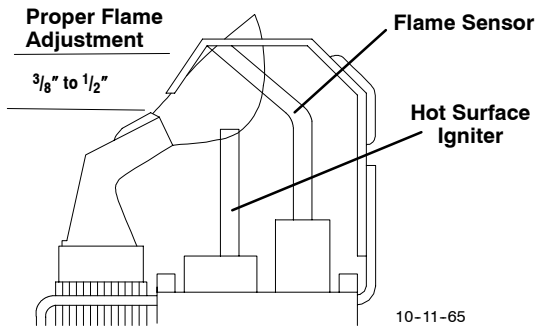

Main Burner Flame Check

Allow the furnace to run approximately 10 minutes then inspect the main burner and pilot flames. See **Figure 42**.

Check for the following (**Figure 42**):

- Stable and blue flames. Dust may cause orange tips or wisps of yellow, but flames **MUST NOT** have solid, yellow tips.
- Flames extending directly from burner into heat exchanger.
- Flames do **NOT** touch sides of heat exchanger.

If any problems with main burner flames are noted, it may be necessary to adjust gas pressures, or check for drafts.

Figure 42	Main Burner

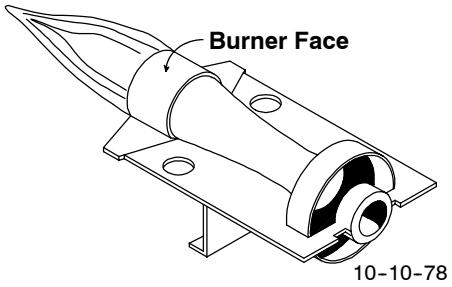

Temperature Rise Check

The blower speed **MUST** be set to give the correct air temperature rise through the furnace as marked on the rating plate. Temperature rise is the difference between supply and return air temperatures.

To check temperature rise,use the following procedure:

1. Place thermometers in supply and return air registers as close to furnace as possible, avoiding direct radiant heat from heat exchangers.
2. Operate furnace continuously for 15 minutes with all registers and duct dampers open.
3. Take reading and compare with range specified on rating plate.
4. If the correct amount of temperature rise is **NOT** obtained, it may be necessary to change blower speed. A higher blower speed will lower the temperature rise. A lower blower speed will increase the temperature rise.

Changing Blower Speed

⚠ WARNING

Electrical shock hazard.

Turn OFF power to furnace before changing speed taps.

Failure to do so can result in death and/or personal injury .

NOTE: The speed taps that the manufacturer sets from the factory for this product are based on a nominal 400 CFM per ton cooling and the basic mid range on the temperature rise for heating.

Since the manufacturer cannot establish the static pressure that will be applied to the unit, it is the responsibility of the installer dealer/contractor to select the proper speed taps for the application when the unit is installed.

If it is necessary to change speeds, refer to steps below.

1. Refer to *Furnace Wiring Diagram* for location of the heating and cooling speed taps located on the electronic fan control as well as location of unused blower motor speed leads. Use the chart (**Table 9**) to determine the blower motor speed settings.

Table 9	Blower Speed Chart
Wire Color	**Motor Speed**
Black	High
Orange*	Med-High
Blue	Medium
Red	Low
* Med-High speed may not be provided on all models.	

2. Change the heat or cool blower motor speed by removing the motor lead from the "**Heat**" or "**Cool**" terminal and replace it with the desired motor speed lead from the **"Unused Motor Lead**" location. Connect the wire previously removed from the "**Heat**" or "**Cool**" terminal to the vacated **"Unused Motor Lead**" terminal.
3. If the same speed must be used for both heating and cooling, remove the undesired motor speed lead from the "**Heat**" or "**Cool**" terminal and connect that lead to the open terminal at **"Unused Motor Lead**" location. Attach a jumper between the "**Heat**" and "**Cool**" terminals and the remaining motor speed lead.

   Note: For motors with (4) speed leads, it will be necessary to tape off the terminal of the motor speed lead removed from the "**Heat**" or "**Cool**" terminal with electrical tape since an open terminal will not be available at the **"Unused Motor Lead**" location.

Continuous Fan Operation

A terminal is provided on the electronic fan control located in the circulating blower compartment for operation of the continuous fan option. This connection is intended for the low speed motor tap, and has a lower contact rating (8 amps) than the heat and cool taps. When the low speed blower lead is connected to this terminal, this will provide low speed blower operation whenever the other two speeds (**Heat** or **Cool**) are not energized.

Thoroughly check the system after modification to ensure the proper operation of the circulating air blower in all modes of operation.

Separate speed selections for Heat, Cool, and Continuous Fan

Connect low speed lead from circulating motor to the "**Cont.**" terminal at the electronic fan control. The appropriate motor leads should already be connected to the "**Heat**" and "**Cool**" terminals.

Heating and Continuous Blower Speed the Same

If it is necessary to operate the heating speed and continuous blower speed using the same blower speed, connect a jumper between the "**Heat**" and "**Cont.**" terminals on the electronic fan control.

Note: There should be only **ONE** motor lead going to the "**Heat**" and "**Cont.**" terminals.

9. Furnace Maintenance

CAUTION

It is recommended that the furnace be inspected and serviced on an annual basis (before the heating season) by a qualified service technician.

See *"User's Information Manual" and the "Service Manual".*

10. Sequence of Operation & Diagnostics

The following is the normal operating sequence for the control system.

Cooling (Y) Request:

24 VAC signals applied to Y & G terminals of EFT (electronic fan timer) control.

- Cool motor speed energized after 6 second Cool Fan On Delay time.

Y & G signals removed from EFT.

- Cool motor speed de-energized after 60 second Cool Fan Off Delay time.

Circulating Fan (G) Request:

24 VAC signals applied to G terminals of EFT control.

- Heat motor speed energized without delay.

G signal removed from EFT.

- Heat motor speed de-energized without delay.

Heating (W) Request:

24 VAC signals applied to W terminal of EFT control.

- Inducer motor turns on.
- The gas valve solenoid energizes.
- Following a 3 second prepurge delay, the pilot valve opens and the ignitor begins to warm up.
- After the pilot lights, the main burners energize and light.
- Timed from the opening of the main gas valve, the control will delay 30 seconds before switching the fan to Heat speed.

W signal removed from EFT.

- The gas valve de-energizes and the main burners go out.
- The inducer runs at its present speed for a 30 second postpurge period.
- Timed from the gas valve de-energizing, the Heat fan speed de-energizes after the selected Heat Fan Delay time expires.

Heating Request with Gas Supply Line Shut Off:

24 VAC signals applied to W terminal of EFT control.

- Inducer motor turns on.
- The gas valve solenoid energizes.
- Following a 3 second prepurge delay, the pilot valve opens and the ignitor begins to warm up.
- The ignitor glows red-hot for 30 seconds, then turns off.
- The igniter stays off for 25 seconds, then begins to warm-up again.
- The igniter glows red-hot for 30 seconds, then turns off.
- The pilot valve closes 3 seconds after the igniter de-energizes.
- The inducer de-energizes 5 seconds after the pilot valve closes.
- The SmartValve proceeds to soft lockout and flashes error code 6.
- The control exits soft lockout after 5 minutes and begins another ignition sequence.

Gas Valve Diagnostic Codes (See Figure 43)

OFF	=	Control not powered
Heartbeat	=	Normal Operation (Standby or call for heat)
1 Flash	=	Not used
2 Flashes	=	Pressure switch closed when should be open
3 Flashes	=	Pressure switch circuit was still sensed as open 30 seconds after the inducer was energized. System is in 5 minute delay mode, with inducer off. After 5-minute delay, a new ignition sequence will be initiated. (Note: SV9541M On/Off switch in off position during a call for heat will generate this diagnostic code)
4 Flashes	=	Limit switch string open
5 Flashes	=	Flame sensed out of sequence - Flame signal still present.
6 Flashes + 1 Note 1	=	Soft Lockout -Maximum retry count exceeded (failed to light within 4 trials for ignition)
6 Flashes + 2 Notes 1,2	=	Soft Lockout -Maximum recycle count exceeded - Last failure was Flame Sense Lost During Run
6 Flashes + 3 Notes 1,2	=	Soft Lockout -Maximum recycle count exceeded - Last failure was Airflow Proving Circuit Opened During Run
6 Flashes + 4 Notes 1,2	=	Soft Lockout -Maximum recycle count exceeded - Last failure was Limit Circuit Opened During Run
7 Flashes	=	Soft Lockout Due to Limit Trips Taking Longer than 2 minutes to Reset; Auto Reset After 1 Hour if Call for Heat Still Present. Reset by Cycling Call for Heat at Any Time.

NOTE 1: The 6 + X designation indicates a combination of flash codes: 6 flashes shows the control is in soft lockout, followed by X flashes to indicate the reason the control went into soft lockout. When the 6+ X code is flashing, the SV9541 will attempt a new ignition sequence after a five minute delay period, if the call for heat is still present. Reset of the thermostat will initiate a new ignition sequence immediately.

NOTE 2: Any combination of 5 'abnormal' events during a single call for heat will result in soft lockout. An 'abnormal' event is a Flame Sense Failure During Run, Airflow Proving Circuit Open During Run, or Limit Circuit Open During Run. The flash code will indicate which was the last 'abnormal' event that put the system into the soft lockout state based on the table above.

Figure 43 — **Typical Gas Valve Honeywell**

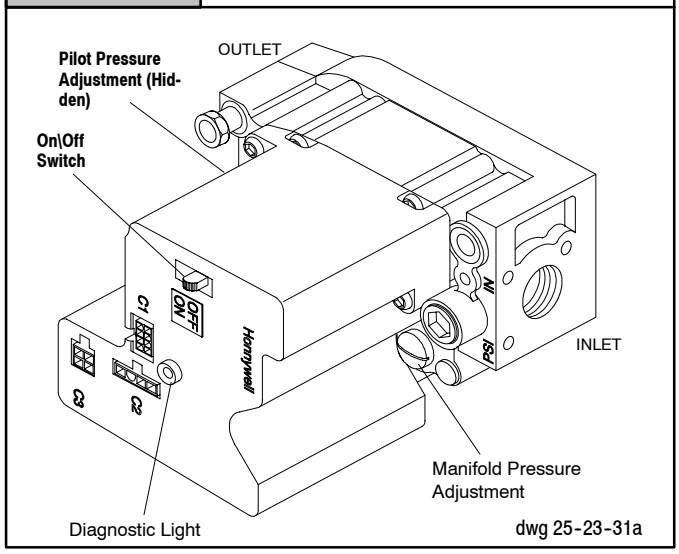

HONEYWELL SV9541M “SMART VALVE” Sequence of Operation

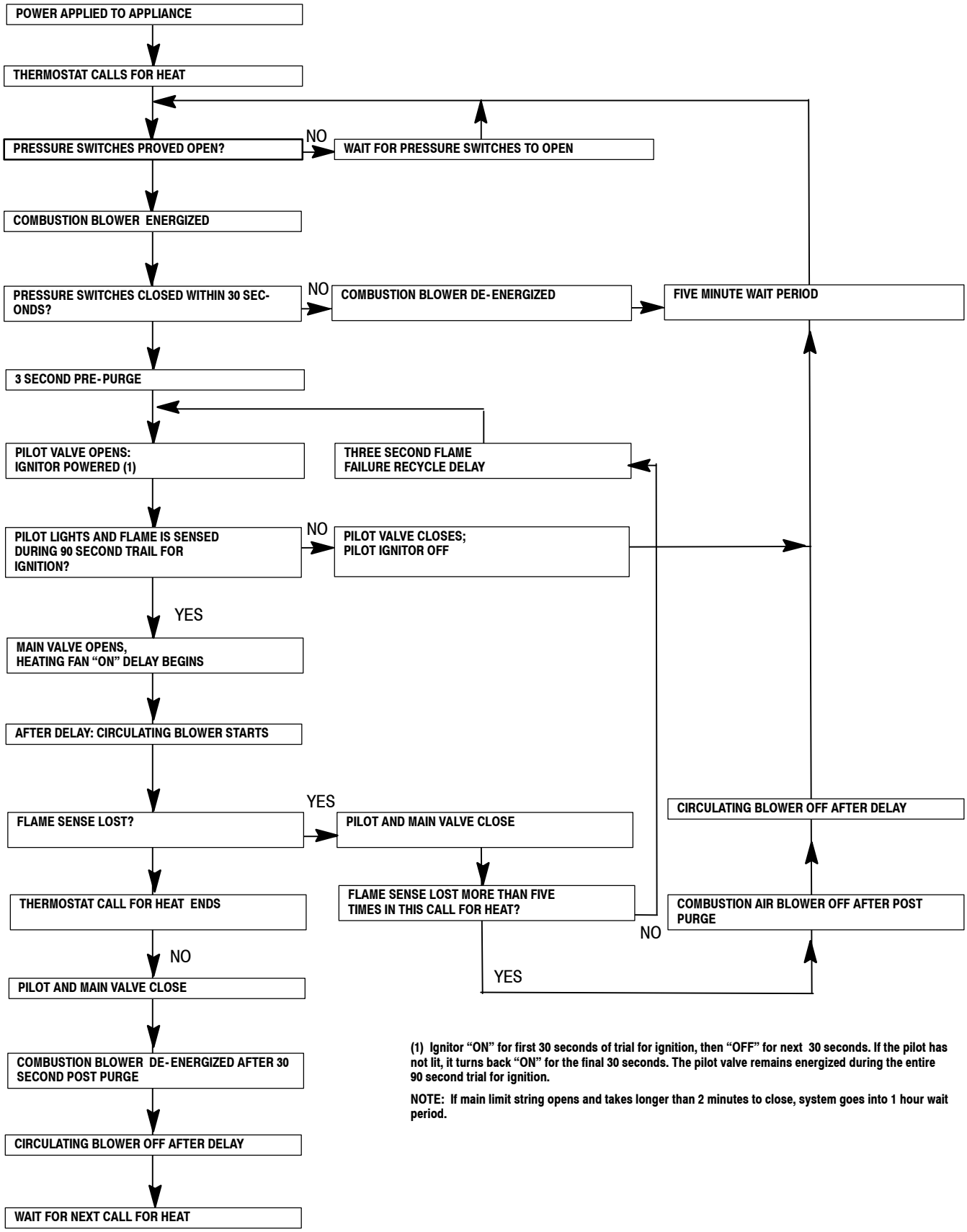

(1) Ignitor “ON” for first 30 seconds of trial for ignition, then “OFF” for next 30 seconds. If the pilot has not lit, it turns back “ON” for the final 30 seconds. The pilot valve remains energized during the entire 90 second trial for ignition.

NOTE: If main limit string opens and takes longer than 2 minutes to close, system goes into 1 hour wait period.

HONEYWELL SV9541M "SMART VALVE" Trouble shooting

The 6 + X designation indicates a combination of flash codes: 6 flashes shows the control is in soft lockout, followed by X flashes to indicate the reason the control went into soft lockout. Last status code indicates repair to address first

LED STATUS	INDICATES	CHECK/REPAIR
Off	No power to system control.	Line voltage input at L1 and Neutral connectors on ST9160B Fan Timer. Low voltage (24V) power at 24 VAC and COM terminals on ST9160B System wiring harness is in good condition and securely connected.
Heartbeat Bright – Dim	Normal indication whenever the system is powered, unless some abnormal event has occurred.	Not Applicable – Normal Operation (stand by or call for heat)
2 Flashes	Pressure switches closed when it should be open (i.e. when call for heat begins). (Combustion blower is not energized until pressure switches opens)	Pressure switches stuck closed (system will wait for pressure switch to open). Pressure switches miswired or jumpered.
3 Flashes	Pressure switches , open when they should be closed (i.e. longer than 30 seconds after combustion blower/inducer is energized). System goes into 5-minute delay period, with combustion blower/ inducer off. At end of the 5-minute delay, another cycle will begin.	Ignition system control switch must be in the ON position. Pressure switches operation, tubing, and wiring. Restrictions in furnace air intake or vent piping.
4 Flashes	Main Limit or Roll Out Switch is open. Combustion blower is energized, Circulating blower is energized heat speed.	Main limit switch. Manual reset burner rollout switch. Limit and rollout switch wiring is in good condition and securely connected.
5 Flashes	Flame signal sensed out of proper sequence. Combustion blower is energized, Circulating blower is energized heat speed after the "ON" delay.	Flame at pilot burner.
6 Flashes + 1 Flash	Soft Lockout. Failed to light pilot during 90 sec. trial for ignition Combustion air blower is de-energized, Circulating blower is de-energized after the "OFF" delay. After 5-minute delay time, control system will reset and initiate a new ignition sequence,	Gas supply off or pressure too low or high for appliance to operate. Damaged or broken HIS element Line voltage HOT lead wire not connected to L1 terminal on ST9160B. Furnace not properly earth grounded. Flame sense rod contaminated or in incorrect position. Pilot burner located in incorrect position. Pilot burner lead wires are in good condition and popery connected. Pressure switches operation, tubing, and wiring.
6 Flashes + 2 Flashes	Soft Lockout. Last failure was Flame Sense lost during run. Maximum recycle count exceeded Combustion air blower is de-energized, Circulating blower is de-energized after the "OFF" delay. After 5-minute delay time, control system will reset and initiate a new ignition sequence,	Gas supply off or pressure too low or high for appliance to operate. Line voltage HOT lead wire not connected to L1 terminal on ST9160B. Furnace not properly earth grounded. Flame sense rod contaminated or in incorrect position. Pilot burner located in incorrect position. Pilot burner lead wires are in good condition and properly connected. Cycling, pressure switch Condensate drain blocked Pressure switches operation, tubing, and wiring.

HONEYWELL SV9541M “SMART VALVE” Trouble shooting continued

LED STATUS	INDICATES	CHECK/REPAIR
6 Flashes + 3 Flashes	Soft Lockout. Last failure was pressure switch Maximum recycle count exceeded Combustion air blower is de-energized, Circulating blower is de-energized after the “OFF” delay. After 5-minute delay time, control system will reset and initiate a new ignition sequence,	Ignition system control switch must be in the ON position. Pressure switches operation, tubing, and wiring. Restrictions in furnace air intake or vent piping. High winds blowing against vent.
6 Flashes + 4 Flashes	Soft Lockout. Last failure was limit circuit opened during run. Combustion air blower is de-energized, Circulating blower is de-energized after the “OFF” delay. After 5-minute delay time, control system will reset and initiate a new ignition sequence,	Main limit switch. Limit and rollout switch wiring is in good condition and securely connected. Restriction in duct work. Dirty filter
7 Flashes	Soft Lockout. Blower failure (typical) Limit trip took longer than 2 minutes to reset. System will start a new ignition sequence after 1 hour, if call for heat still present.	Dead blower. Blocked duct work.

Vent Termination Clearances

⚠ WARNING

Poison carbon monoxide gas, fire and explosion hazard.

Inlet and outlet pipes may NOT be vented directly above each other (standard vent terminals).

Failure to properly vent this furnace can result in death, personal injury and/or property damage.

1. Determine termination locations based on clearances specified in following steps and as shown in **Figure 7, Figure 44** through **Figure 49.**

2. The vent termination must be located at least 12″ above ground or normally expected snow accumulation levels.

3. Do **NOT** terminate over public walkways. Avoid areas where condensate may cause problems such as above planters, patios, or adjacent to windows where steam may cause fogging.

4. The vent termination shall be located at least 4′ horizontally from any electric meter, gas meter, gas regulator, and any relief equipment. These distances apply **ONLY** to U.S. installations.

5. The vent termination is to be located at least 3′ above any forced air inlet located within 10′ ; and at least 10′ from a combustion air intake of another appliance, except another direct vent furnace intake.

6. In Canada, the *Canadian Fuel Gas Code* takes precedence over the preceding termination instructions.

Concentric Vent Termination - Kit # NAHA001CV & NAHA002CV

These kits are for vertical or horizontal termination of the combustion air inlet and the exhaust vent pipes on Category IV gas-fired condensing furnaces. The NAHA001CV kit can be used for 3″ diameter pipe systems. The NAHA002CV kit can be used for 2″ diameter pipe system. Refer to **Table 10** for the correct pipe size for the furnace. Both the combustion air inlet and the exhaust vent pipes must attach to the termination kit. The termination kit must terminate outside the structure and must be installed per the instructions outlined below for vertical or horizontal termination. Vertical termination is preferred. Field supplied pipe and fittings are required to complete the installation.

Figure 44 Kit Components

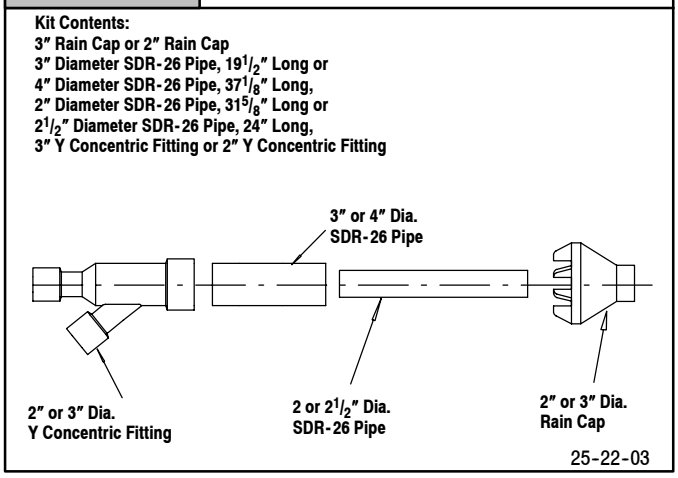

Vertical & Horizontal Termination

1. Determine the pipe diameters required for the installation from **Table 10** and **Table 11** and **Figure 46.**

2. Determine the best location for the termination kit. See **Figure 45** for vertical termination or **Figure 45** and **Figure 49** for horizontal termination. Roof termination is preferred since it is less susceptible to damage, has reduced intake contaminants and less visible vent vapor. For side wall termination, consideration should be given to: 1) possible damage from the vapors to plants/shrubs, other equipment and building materials, 2) possible damage to the terminal from foreign objects, 3) wind effects that may cause recirculation of flue products, debris or light snow and 4) visible vent vapor.

Figure 45 Concentric Vent Roof Installation

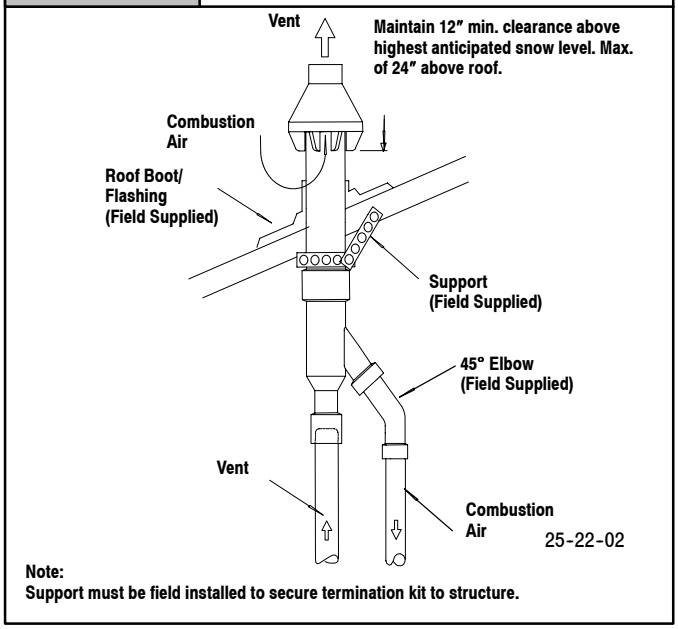

3. Cut one 5″ diameter hole through the structure for the NAHA001CV Kit or one 4″ diameter hole for the NAHA002CV Kit .

4. Dimension D may be lengthened to 60″ max. or shortened by cutting the pipes to 12″ min. Dimension A will change according to D dimension. (See **Figure 46)**

Figure 46 — **Concentric Vent Dimensional Drawing**

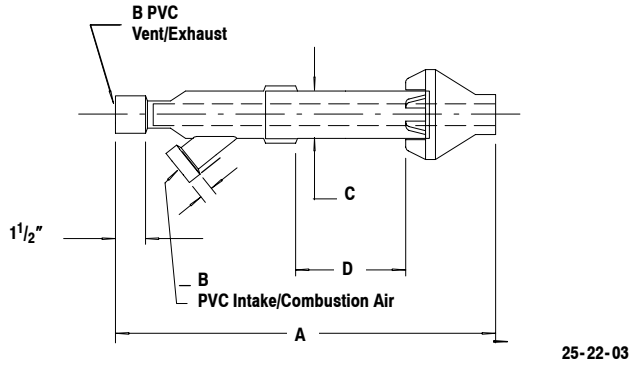

Model	A*	B	C	D**
NAHA001CV	$38^{7}/_{8}$	3	$4^{1}/_{2}$	$21^{1}/_{8}$
NAHA002CV	$33^{3}/_{8}$	2	$3^{1}/_{2}$	$16^{7}/_{8}$

* = Dimension will change accordingly as dimension D is lengthened or shortened.
** = Dimension D may be lengthened to 60″ may also be shortened by cutting the pipes provided in the kit to 12″ minimum

Table 10 — **Concentric Termination Kit NAHA001CV & NAHA002CV Venting Table for *9MPD Models**

50,000, 75,000 & 80,000 Btuh Furnaces
NAHA002CV - 35′ & (4) 90° elbows with 2″ PVC pipe or **NAHA001CV - 65**′ & (4) 90° elbows with 3″ PVC pipe
100,000 Btuh Furnace
NAHA001CV - 35′ & (4) 90° elbows with 3″ PVC pipe or **NAHA001CV - 65**′ & (4) 90° elbows with 3″ PVC pipe & Long Vent Kit (See Tech. Manual)
125,000 Btuh Furnace
NAHA001CV - 35′ & (4) 90° elbows with 3″ PVC pipe

1. **Do not include the field supplied 45° elbow in the total elbow count.**
2. **If more than four elbows are required, reduce the length of both the inlet and the exhaust pipes five feet for each additional elbow used.**
3. **Elbows are DWV long radius type for 2″ and 3″ vents.**

NOTE: Feet of pipe is whichever pipe run is the longest, either inlet *or* outlet side.

Table 11 — **Concentric Termination Kit NAHA001CV & NAHA002CV Venting Table for N9MP2 Models**

50,000 & 80,000 Btuh Furnaces
NAHA002CV - 35′ & (4) 90° elbows with 2″ PVC pipe or **NAHA001CV - 65**′ & (4) 90° elbows with 3″ PVC pipe
75,000 Btuh Furnaces
NAHA002CV - 20′ & (2) 90° elbows with 2″ PVC pipe oor **NAHA002CV - 35**′ & (4) 90° elbows with 2″ PVC pipe & Long Vent Kit (See Tech. Manual) or **NAHA001CV - 65**′ & (4) 90° elbows with 3″ PVC pipe
100,000 Btuh Furnace
NAHA001CV - 35′ & (4) 90° elbows with 3″ PVC pipe or **NAHA001CV - 65**′ & (4) 90° elbows with 3″ PVC pipe & Long Vent Kit (See Tech. Manual)
125,000 Btuh Furnace
NAHA001CV - 35′ & (4) 90° elbows with 3″ PVC pipe

1. **Do not include the field supplied 45° elbow in the total elbow count.**
2. **If more than four elbows are required, reduce the length of both the inlet and the exhaust pipes five feet for each additional elbow used.**
3. **Elbows are DWV long radius type for 2″ and 3″ vents.**

NOTE: Feet of pipe is whichever pipe run is the longest, either inlet *or* outlet side.

If assembly needs to be extended to meet height or side wall thickness requirement, the two pipes supplied in the kit may be replaced by using the same diameter solid, single (no coupling connections) field supplied SDR-26 PVC (ASTM D2241) pipes. Do not extend dimension D more than 60″. (See **Figure 46)**

Do not use field supplied couplings to extend the pipes. Airflow restriction will occur and the furnace pressure switch may cause intermittent operation.

5. Partially assemble the concentric vent termination kit. Clean and cement the parts using the procedures for Joining Pipe and Fittings section of the manual. A) Cement the Y Concentric fitting to the 4″ diameter kit pipe. (See **Figure 47)** B) Cement the 3″ rain cap to the $2^{1}/_{2}$″ diameter kit part. (See **Figure 47) NOTE:** A field supplied stainless steel screw may be used to secure the rain cap to the pipe instead of cementing when field disassembly is desired for cleaning (See **Figure 47)**

Figure 47 — **Rain Cap to Vent Pipe Assembly**

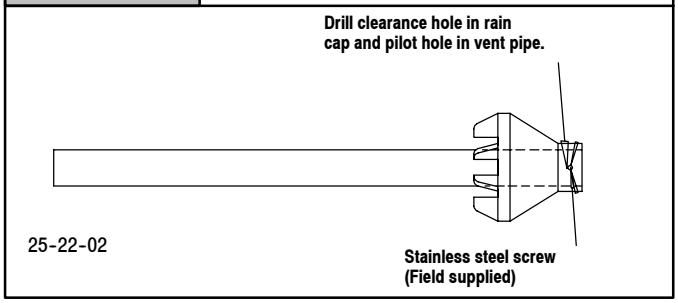

⚠ WARNING

Poison carbon monoxide gas hazard.

When using the alternate screw assembly method, drill a clearance hole in the rain cap and a pilot hole in the vent pipe for the screw size being used. Failure to drill adequate holes may cause cracking of the PVC components, allowing flue gases to be recirculated.

Failure to follow this warning could result in death, personal injury and/or property damage.

⚠ WARNING

Poison carbon monoxide gas hazard.

Do not operate the furnace with the rain cap removed as recirulation of the flue gases may occur. Water may also collect inside the larger combustion air pipe and flow to the burner enclosure.

Failure to follow this warning could result in death, personal injury and/or property damage.

6. Install the Y concentric fitting and the pipe assembly through the structure's hole. For vertical termination, install the parts through the field supplied roof boot/flashing. **NOTE:** Do not allow insulation or other materials to accumulate inside the pipe assembly when installing through the structure's hole.

7. Secure the assembly to the structure as shown in **Figure 45** or **Figure 49** using field supplied metal strapping or equivalent material.

   NOTE: Ensure the termination height is above the roof surface or anticipated snow level as shown in **Figure 45** for vertical termination. Ensure the termination location clearance dimensions are as shown in **Figure 48** and **Figure 49** for horizontal termination.

Figure 48 — **Concentric Vent and Combustion-Air Side Termination**

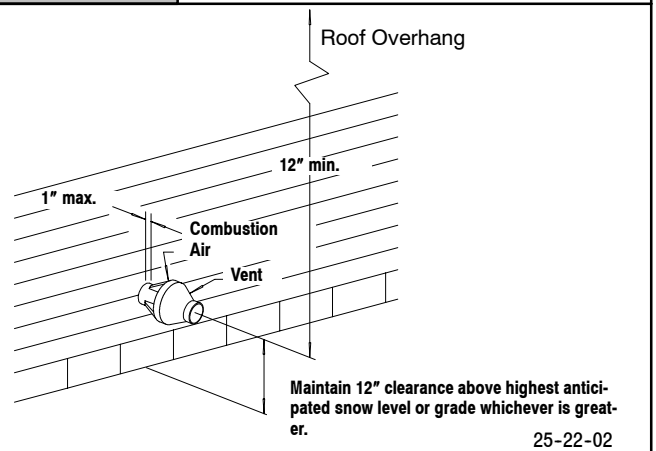

Figure 49 — **Concentric Vent Sidewall Attachment**

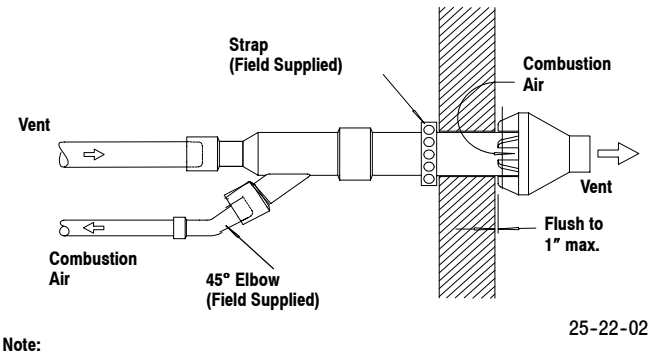

Note:
Securing strap must be field installed to prevent movement of termination kit in side wall.

8. Install the rain cap and the small diameter pipe assembly in the Y concentric fitting and the large pipe assembly. Ensure that the small diameter pipe is bottomed out and securely cemented in the Y concentric fitting.

9. Cement the furnace combustion air and vent pipes to the concentric vent termination assembly. See **Figure 45** or **Figure 49** for proper pipe attachment.

10. Operate the furnace through one heat cycle to ensure combustion air and vent pipes are properly connected to the concentric termination connections.