G96VTN (Series B)

Up to 96.7% AFUE, Two-Stage, Variable 25-Speed Non-Communicating, 4-Way Multipoise 35-in. (889 mm) Tall Condensing Gas Furnace

Comfortmaker® Air Conditioning & Heating

Product Data

A200417

Representative drawing only. Some product models may vary.

⚠ WARNING

This furnace is not designed for use in mobile homes, trailers, or recreational vehicles. Such use could result in property damage and/or death.

Use of the AHRI Certified TM Mark indicates a manufacturer's participation in the program. For verification of certification for individual products, go to www.ahridirectory.org .

ISO 9001 Quality

EASIER TO SELL

- Up to 96.7% AFUE in upflow and horizontal positions 95% AFUE in downflow position
- Two-stage heating operation
- Variable 25-speed, constant-torque (VCT) ECM blower
- Supports single-stage and two-stage cooling units
- Dehumidification feature in cooling
- Can be installed in air quality management districts with a 40 ng/J NOx emissions requirement.
- Cabinet air leakage less than 2.0% at 1.0 in. w.c. and cabinet air leakage less than 1.4% at 0.5 in. w.c. when tested in accordance with ASHRAE standard 193

TOUGHER

- Flame roll-out sensors standard
- Adjustable heating blower OFF delay
- Factory set blower ON delay
- RPJ® primary heat exchanger
- Stainless steel secondary heat exchanger
- High temperature limit control designed to prevent overheating
- Direct ignition with Silicon Nitride igniter

QUIETER

- Operates quieter at lower heating rates
- Two-speed induced draft combustion blower
- Variable speed, constant torque ECM blower motor
- Fully insulated steel cabinet

EASIER TO INSTALL AND SERVICE

- On-board NFC antenna makes setup a tap away when using the service technician app
- Direct vent (2-pipe), single-pipe venting or ventilated combustion air
- Electronic Air Cleaner and Humidifier terminals
- 35” (889mm) high, for ease of installation
- Quarter turn knobs for easy door removal and secure attachment
- Convertible to propane with gas conversion accessory kit
- Four position - upflow/downflow/horizontal (left/right) installation
- Twelve different venting configurations
- Through the casing flue pipe for counterflow or horizontal applications with accessory (order separately)
- Concentric vent available
- Slide out heat exchanger assembly and blower assembly
- Twinning capable with accessory (order separately)
- 1202422 size allows 15 Amp breaker with accessory (order separately)
- Compatible with 24V thermostats

LIMITED WARRANTY *

- 5-year No Hassle Replacement™ limited warranty
- Default 5-year parts limited warranty
- Default 20-year heat exchanger limited warranty

- 10-year parts and lifetime limited heat exchanger warranty with timely registration*

  Equipment must be registered within 90 days of original installation, except in jurisdictions where warranty benefits cannot be conditioned on registration.

*Applies to original purchaser/homeowner and not available to subsequent owners.

See warranty certificate for complete details and restrictions, including warranty coverage of other applications.

UNIT PERFORMANCE DATA

Model	Input (BTUh)	Efficiency AFUE		Cooling Capacity CFM range	Dimensions H x W x D In (mm)	Shipping Wt. Lbs (Kg)
		Upflow	Downflow/Hz			
0401410	40,000	96.0%	95.0%	135-1035	35 x 14-3/16 x 29-1/2 (889 x 361 x 750)	126 (57.2)
0401712	40,000	96.0%	95.0%	205-1105	35 x 17-1/2 x 29-1/2 (889 x 445 x 750)	136 (61.7)
0601412	60,000	95.0%	95.0%	175-1155	35 x 14-3/16 x 29-1/2 (889 x 361 x 750)	128 (58.1)
0601716	60,000	96.3%	95.0%	345-1565	35 x 17-1/2 x 29-1/2 (889 x 445 x 750)	145 (65.8)
0801716	80,000	96.2%	95.0%	255-1625	35 x 17-1/2 x 29-1/2 (889 x 445 x 750)	152 (68.9)
0802120	80,000	96.7%	95.0%	270-2110	35 x 21 x 29-1/2 (889 x 533 x 750)	160 (72.6)
1002120	100,000	96.1%	95.0%	340-2170	35 x 21 x 29-1/2 (889 x 533 x 750)	172 (78.0)
1002122	100,000	96.2%	95.0%	525-2250	35 x 21 x 29-1/2 (889 x 533 x 750)	173 (78.5)
1202422	120,000	96.7%	95.0%	165-2130	35 x 24-1/2 x 29-1/2 (889 x 622 x 750)	191 (86.6)

DIMENSIONAL DATA

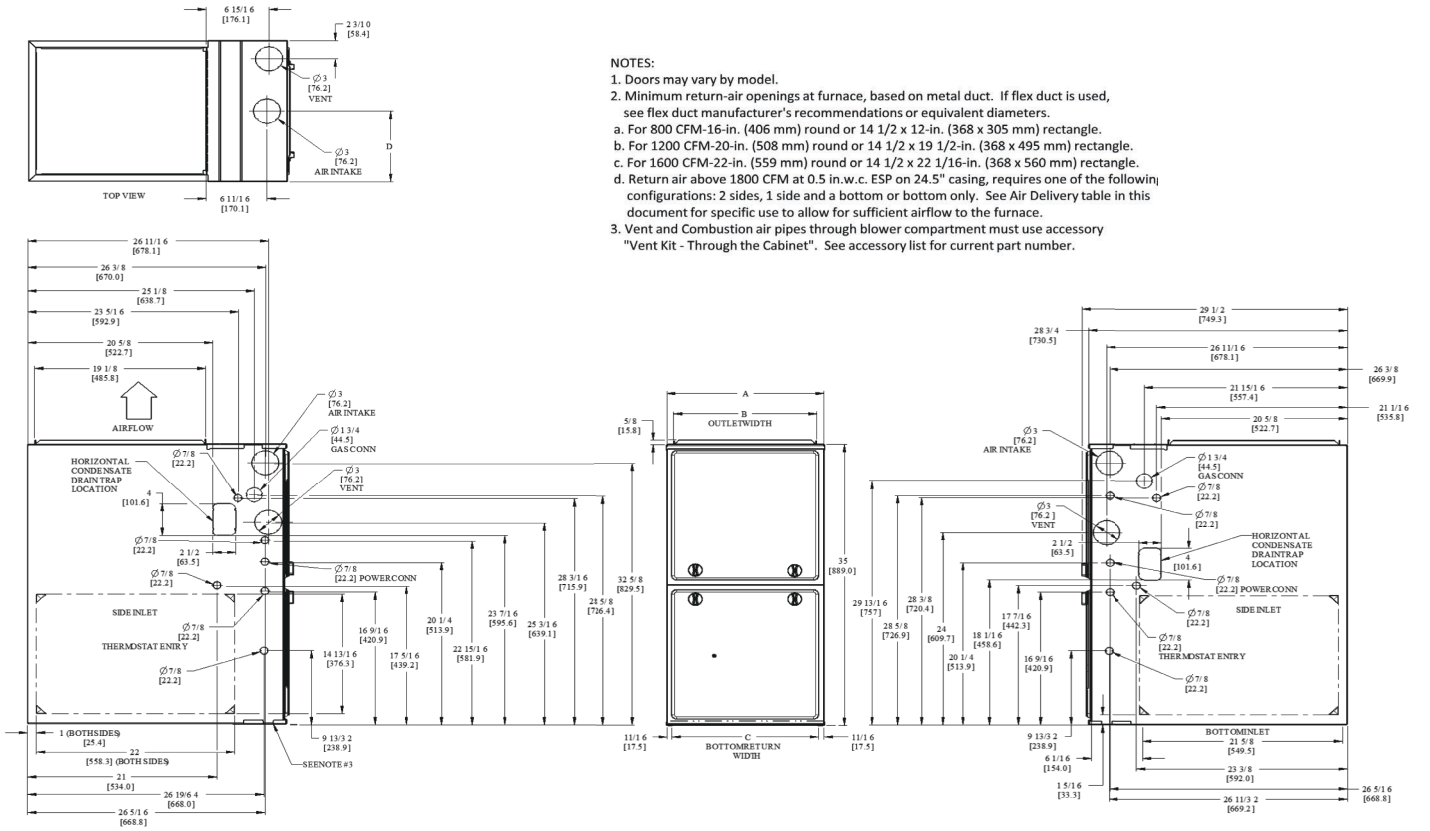

NOTES:
1. Doors may vary by model.
2. Minimum return-air openings at furnace, based on metal duct. If flex duct is used, see flex duct manufacturer's recommendations or equivalent diameters.
   a. For 800 CFM-16-in. (406 mm) round or 14 1/2 x 12-in. (368 x 305 mm) rectangle.
   b. For 1200 CFM-20-in. (508 mm) round or 14 1/2 x 19 1/2-in. (368 x 495 mm) rectangle.
   c. For 1600 CFM-22-in. (559 mm) round or 14 1/2 x 22 1/16-in. (368 x 560 mm) rectangle.
   d. Return air above 1800 CFM at 0.5 in.w.c. ESP on 24.5" casing, requires one of the following configurations: 2 sides, 1 side and a bottom or bottom only. See Air Delivery table in this document for specific use to allow for sufficient airflow to the furnace.
3. Vent and Combustion air pipes through blower compartment must use accessory "Vent Kit - Through the Cabinet". See accessory list for current part number.

NOTE: ALL DIMENSIONS IN INCH (MM) SD5663-4 REV.-

A210796

Dimensions

FURNACE SIZE	A	B	C	D	SHIP WT. LB (KG)
	CABINET WIDTH	OUTLET WIDTH	BOTTOM INLET WIDTH	AIR INTAKE	
0401410	14-3/16 (361)	12-1/2 (319)	12-9/16 (322)	7-1/8 (181)	126 (57.2)
0401712	17-1/2 (445)	15-7/8 (403)	16 (406)	8-3/4 (222)	136 (61.7)
0601412	14-3/16 (361)	12-1/2 (319)	12-9/16 (322)	7-1/8 (181)	128 (58.1)
0601716	17-1/2 (445)	15-7/8 (403)	16 (406)	8-3/4 (222)	145 (65.8)
0801716	17-1/2 (445)	15-7/8 (403)	16 (406)	8-3/4 (222)	152 (68.9)
0802120	21 (533)	19-3/8 (492)	19-1/2 (495)	10-1/2 (267)	160 (72.6)
1002120	21 (533)	19-3/8 (492)	19-1/2 (495)	10-1/2 (267)	172 (78.0)
1002122	21 (533)	19-3/8 (492)	19-1/2 (495)	10-1/2 (267)	173 (78.5)

Manufacturer reserves the right to change, at any time, specifications and designs without notice and without obligations.

MODEL NUMBER NOMENCLATURE

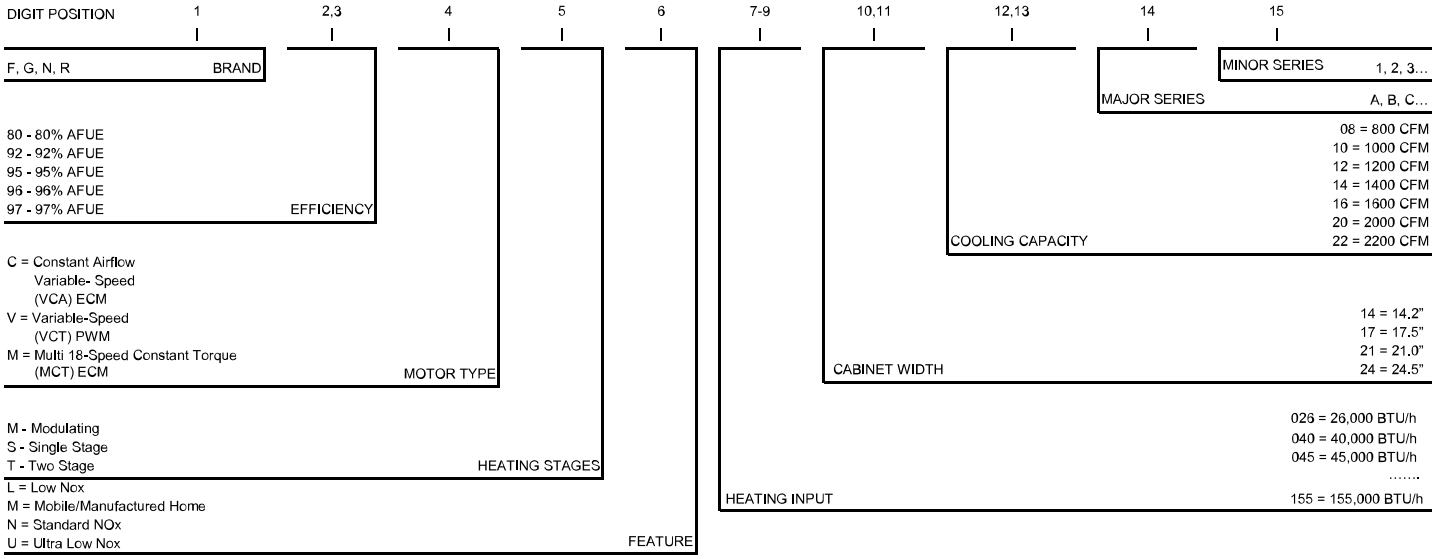

A221575

FURNACE COMPONENTS

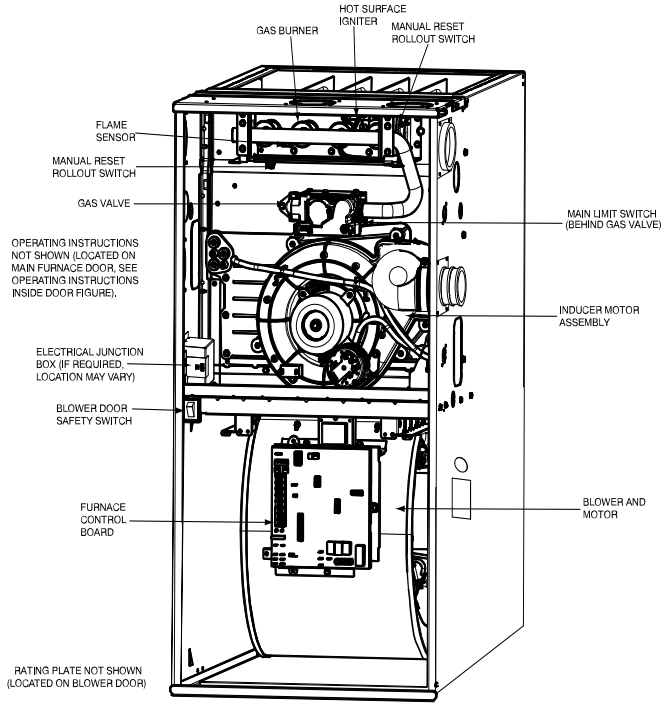

A190145

MINIMUM CLEARANCES TO COMBUSTIBLE MATERIALS

POSITION	CLEARANCE
Rear	0 (0 mm)
Front (Combustion air openings in furnace and in structure)	1 in. (25 mm)
Required for service*	24 in. (610 mm)†
All Sides of Supply Plenum*	1 in. (25 mm)
Sides	0 (0 mm)
Vent	0 (0 mm)
Top of Furnace	1 in. (25 mm)

*. Consult your local building codes
†. Recommended

The furnace should be sized to provide 100 percent of the design heating load requirement plus any margin that occurs because of furnace model size capacity increments. None of the furnace model sizes can be used if the heating load is 20,000 BTU or lower. Use Air Conditioning Contractors of America (Manual J and S); American Society of Heating, Refrigerating, and Air-Conditioning Engineers; or other approved engineering method to calculate heating load estimates and select the furnace. Excessive oversizing of the furnace may cause the furnace and/or vent to fail prematurely, customer discomfort and/or vent freezing.

Failure to follow these guidelines is considered faulty installation and/or misapplication of the furnace; and resulting failure, damage, or repairs may impact warranty coverage.

SPECIFICATIONS

UNIT SIZE		0401410	0401712	0601412	0601716
HEATING AND CAPACITY AND EFFICIENCY					
Input BTUh*	High Heat	40,000	40,000	60,000	60,000
	Low Heat	26,000	26,000	39,000	39,000
Output Capacity (BTUh)†	High Heat	39,000	39,000	58,000	58,000
	Low Heat	25,000	25,000	38,000	38,000
Certified Temperature Rise Range - °F (°C)	High Heat	40 - 70 (22 - 39)	40 - 70 (22 - 39)	40 - 70 (22 - 39)	40 - 70 (22 - 39)
	Low Heat	30 - 60 (17 - 33)	30 - 60 (17 - 33)	30 - 60 (17 - 33)	30 - 60 (17 - 33)
AFUE	Upflow	96.0%	96.0%	95.0%	96.3%
	Downflow/ Horizontal	95.0%	95.0%	95.0%	95.0%
AIRFLOW CAPACITY AND BLOWER DATA					
Rated Certified External Static Pressure	Heating	0.1	0.1	0.12	0.12
	Cooling	0.5	0.5	0.5	0.5
Airflow CFM @ Rated ESP (CFM)‡	High Heat	700	715	1025	1030
	Low Heat	530	540	770	770
	Cooling	135 - 1035	205 - 1105	175 - 1155	345 - 1565
Cooling Capacity (tons)	400 CFM/ton	2	2.5	2.5	3.5
	350 CFM/ton	2.5	3	3	4
Direct Drive Motor Type		Electronically Commutated Motor (ECM)			
Direct Drive Motor HP		1/2	1/2	1/2	3/4
Motor Full Load Amps		6.3	6.7	6.3	8.8
Heating Blower Control (Htg Off-Delay)		Adjustable: 90, 120, 150, 180 seconds			
Cooling Blower Control (Time Delay Relay)		Adjustable: 5, 30, 90 seconds			
Blower Wheel Diameter x Width - In. (mm)		11 x 7	11 x 8	11 x 7	11 x 8
Air Filtration System		Field Supplied Filter			
Filter used for Certified Watt Data		325531-40**			
ELECTRICAL DATA					
Unit Volts-Hertz-Phase		115-60-1			
Operating Voltage Range	Min-Max	104-127			
Maximum Unit Amps Default / Low Amp Kit	Amps	7	7.4	7.1	10.1
Unit Ampacity Default / Low Amp Kit	Amps	9.7	10.2	9.8	13.6
Maximum Wire Length Default / Low Amp Kit					
Measure 1 way in Ft	Feet	38	36	38	27
(M)	Meters	11.7	11.1	11.5	8.3
Minimum Wire Size Default / Low Amp Kit	AWG	14	14	14	14
Max. Fuse/Ckt Bkr Size Default / Low Amp Kit (Time-Delay Type Recommended)	Amps	15	15	15	15
Transformer Capacity (24 VAC output)		40VA			
External Control Power Available	Heating	12VA			
	Cooling	35VA			
GAS CONTROLS					
Burners		2	2	3	3
Gas Connection Size		1/2in. NPT			
Gas Valve (Redundant)	Mfr	White Rodgers™			
Min. inlet pressure	(in.w.c.)	4.5 (Natural Gas)			
Max. inlet pressure	(in.w.c.)	13.6 (Natural Gas)			
Manufactured (Mobile Home Kit)		Not Allowed			
Ignition Device		Silicon Nitride			
Factory installed orifice		44	44	44	44
CONNECTIONS					
Communication System		None			
Thermostat Connections		G, C, W, Y/Y2, Y1, R, DHUM			
Accessory Connections		EAC-1 (115 VAC); HUM (24 VAC); 1-STG AC (via Y/Y2); 2-STG AC (via Y/Y2 and Y1)			

*. Gas input ratings are certified for elevations to 2000 ft. (610 M). In USA, For elevations above 2000 ft (610 M), reduce ratings 4 percent for each 1000 ft (305 M) above sea level. Refer to National Fuel Gas Code NFPA 54/ANSI Z223.1 Table F.4 or furnace installation instructions.

†. Capacity in accordance with U.S. Government DOE test procedures.

‡. Airflow shown is for bottom only return-air supply for the as-shipped speed tap. For air delivery above 1800 CFM, see Air Delivery table for other options. A filter is required for each return-air supply. An airflow reduction of up to 7 percent may occur when using the factory-specified 4-5/16-in. (110 mm) wide, high efficiency media filter.

**. See Accessory List for part numbers available.

UNIT SIZE		0801716	0802120	1002120	1002122	1202422
HEATING AND CAPACITY AND EFFICIENCY						
Input BTUh*	High Heat	80,000	80,000	100,000	100,000	120,000
	Low Heat	52,000	52,000	65,000	65,000	78,000
Output Capacity (BTUh)†	High Heat	78,000	78,000	97,000	97,000	117,000
	Low Heat	50,000	51,000	63,000	63,000	76,000
Certified Temperature Rise Range - °F (°C)	High Heat	40 - 70 (22 - 39)	40 - 70 (22 - 39)	40 - 70 (22 - 39)	40 - 70 (22 - 39)	40 - 70 (22 - 39)
	Low Heat	30 - 60 (17 - 33)	30 - 60 (17 - 33)	30 - 60 (17 - 33)	30 - 60 (17 - 33)	30 - 60 (17 - 33)
AFUE	Upflow	96.2%	96.7%	96.1%	96.2%	96.7%
	Downflow/ Horizontal	95.0%	95.0%	95.0%	95.0%	95.0%
AIRFLOW CAPACITY AND BLOWER DATA						
Rated Certified External Static Pressure	Heating	0.15	0.15	0.2	0.2	0.2
	Cooling	0.5	0.5	0.5	0.5	0.5
Airflow CFM @ Rated ESP (CFM)‡	High Heat	1335	1360	1715	1730	2045
	Low Heat	1025	1055	1425	1245	1555
	Cooling	255 - 1625	270 - 2110	340 - 2170	525 - 2250	165 - 2130
Cooling Capacity (tons)	400 CFM/ton	4	5	5	5	5
	350 CFM/ton	4.5	5.5	5.5	6	6
Direct Drive Motor Type		Electronically Commutated Motor (ECM)				
Direct Drive Motor HP		3/4	1	1	1	1
Motor Full Load Amps		9.2	11.5	11.7	11	11.5
Heating Blower Control (Htg Off-Delay)		Adjustable: 90, 120, 150, 180 seconds				
Cooling Blower Control (Time Delay Relay)		Adjustable: 5, 30, 90 seconds				
Blower Wheel Diameter x Width - In. (mm)		11 x 8	11 x 10	11 x 10	11 x 10	11 x 11
Air Filtration System		Field Supplied Filter				
Filter used for Certified Watt Data		325531-40**				
ELECTRICAL DATA						
Unit Volts-Hertz-Phase		115-60-1				
Operating Voltage Range	Min-Max	104-127				
Maximum Unit Amps Default / Low Amp Kit	Amps	10	13.1	13.2	12.5	12.6/11.3
Unit Ampacity Default / Low Amp Kit	Amps	13.4	17.3	17.4	16.5	16.6/15.0
Maximum Wire Length Default / Low Amp Kit						
Measure 1 way in Ft	Feet	27	33	33	34	34/24
(M)	Meters	8.4	10.1	10	10.6	10.5/7.5
Minimum Wire Size Default / Low Amp Kit	AWG	14	12	12	12	12/14
Max. Fuse/Ckt Bkr Size Default / Low Amp Kit (Time-Delay Type Recommended)	Amps	15	20	20	20	20/15
Transformer Capacity (24 VAC output)		40VA				
External Control Power Available	Heating	12VA				
	Cooling	35VA				
GAS CONTROLS						
Burners		4	4	5	5	6
Gas Connection Size		1/2in. NPT				
Gas Valve (Redundant)	Mfr	White Rodgers™				
Min. inlet pressure	(in.w.c.)	4.5 (Natural Gas)				
Max. inlet pressure	(in.w.c.)	13.6 (Natural Gas)				
Manufactured (Mobile Home Kit)		Not Allowed				
Ignition Device		Silicon Nitride				
Factory installed orifice		44	44	44	44	44
CONNECTIONS						
Communication System		None				
Thermostat Connections		G, C, W, Y/Y2, Y1, R, DHUM				
Accessory Connections		EAC-1 (115 VAC); HUM (24 VAC); 1-STG AC (via Y/Y2); 2-STG AC (via Y/Y2 and Y1)				

*. Gas input ratings are certified for elevations to 2000 ft. (610 M). In USA, For elevations above 2000 ft (610 M), reduce ratings 4 percent for each 1000 ft (305 M) above sea level. Refer to National Fuel Gas Code NFPA 54/ANSI Z223.1 Table F.4 or furnace installation instructions.

†. Capacity in accordance with U.S. Government DOE test procedures.

‡. Airflow shown is for bottom only return-air supply for the as-shipped speed tap. For air delivery above 1800 CFM, see Air Delivery table for other options. A filter is required for each return-air supply. An airflow reduction of up to 7 percent may occur when using the factory-specified 4-5/16-in. (110 mm) wide, high efficiency media filter.

**. See Accessory List for part numbers available.

AIR DELIVERY - CFM

Air Delivery - CFM (with filter)

Unit Size	Airflow Setting	Default Setting	External Static Pressure (in. w.c.)									
			0.1	0.2	0.3	0.4	0.5	0.6	0.7	0.8	0.9	1.0
0401410	1	Cont. Fan	280	215	150	-	-	-	-	-	-	-
	2		325	265	205	145	-	-	-	-	-	-
	3		365	310	255	200	135	-	-	-	-	-
	4		380	330	280	225	165	105	-	-	-	-
	5		430	385	335	290	240	185	130	-	-	-
	6		460	415	370	325	280	235	175	130	-	-
	7		500	460	420	380	335	295	245	195	145	-
	8	Low Heating	530	490	450	410	370	330	285	240	190	145
	9		540	505	465	425	385	345	305	260	210	165
	10		580	540	505	465	430	390	355	315	275	230
	11		600	565	525	490	455	420	380	345	305	265
	12		625	590	550	520	480	445	410	375	340	300
	13		680	645	610	580	545	515	480	445	410	380
	14	High Heating	700	665	635	600	570	535	505	470	440	410
	15		735	705	675	645	615	585	550	520	490	460
	16		765	735	705	675	645	615	585	555	525	495
	17		795	765	735	705	675	650	620	590	560	530
	18	Low Cooling	840	810	780	755	725	700	670	645	615	590
	19		885	855	830	800	775	750	720	695	670	640
	20		930	905	880	850	825	800	775	750	725	700
	21		965	940	915	890	865	845	820	795	770	745
	22		1015	990	965	940	915	895	870	845	825	800
	23		1060	1035	1015	990	965	945	920	900	875	855
	24		1095	1070	1050	1025	1005	980	960	940	915	895
	25	High Cooling	1125	1100	1080	1060	1035	1015	995	970	945	910
0401712	1	Cont. Fan	435	375	320	265	205	150	-	-	-	-
	2		470	410	355	310	255	200	140	-	-	-
	3		500	445	390	345	295	245	190	130	-	-
	4	Low Heating	540	490	440	395	350	305	255	205	150	-
	5		585	535	485	440	400	355	315	265	220	165
	6		625	575	530	485	445	405	365	325	280	235
	7		635	590	545	500	460	420	380	340	295	255
	8		670	625	585	540	500	465	430	390	345	305
	9	High Heating	715	675	635	590	550	515	480	445	410	370
	10		760	720	680	640	600	565	530	500	465	430
	11		800	765	725	690	650	610	580	545	515	485
	12		850	815	780	745	710	670	635	605	575	545
	13	Low Cooling	895	865	830	795	760	725	690	660	630	600
	14		925	890	855	825	790	755	720	690	660	630
	15		950	920	890	855	825	790	755	725	695	665
	16		975	945	915	885	850	820	785	755	720	695
	17		1000	970	940	910	880	845	815	780	750	720
	18		1025	995	965	935	905	875	840	810	780	750
	19		1045	1020	990	960	930	900	870	835	805	780
	20		1075	1045	1020	990	960	930	900	870	840	810
	21		1100	1070	1045	1020	990	960	930	900	870	840
	22		1130	1105	1080	1050	1020	990	965	935	905	875
	23		1160	1135	1105	1080	1055	1025	995	970	940	910
	24	High Cooling	1200	1175	1150	1125	1095	1070	1035	995	960	920
	25		1240	1210	1175	1140	1105	1070	1035	995	960	920

Manufacturer reserves the right to change, at any time, specifications and designs without notice and without obligations.

Air Delivery - CFM (with filter) (Continued)

Unit Size	Airflow Setting	Default Setting	External Static Pressure (in. w.c.)									
			0.1	0.2	0.3	0.4	0.5	0.6	0.7	0.8	0.9	1.0
0601412	1	Cont. Fan	420	365	305	245	175	110	-	-	-	-
	2		435	380	325	265	200	135	-	-	-	-
	3		490	440	385	335	280	225	165	-	-	-
	4		555	510	460	410	365	315	265	205	150	-
	5		585	540	495	450	400	355	305	255	200	150
	6		645	600	555	510	470	425	380	335	290	240
	7		680	640	595	555	515	475	435	390	350	305
	8		730	690	650	610	570	535	495	455	415	375
	9	Low Heating	780	740	700	665	625	590	555	515	480	440
	10		790	750	715	675	640	605	570	530	495	455
	11		835	795	760	725	690	655	620	585	550	515
	12		845	810	770	735	700	670	635	600	565	530
	13		870	835	800	765	730	700	665	630	600	565
	14		900	865	830	795	760	730	695	665	630	595
	15	Low Cooling	935	905	870	840	805	775	740	710	680	650
	16		970	935	905	870	840	810	775	745	715	685
	17		995	965	935	900	870	840	810	780	750	720
	18	High Heating	1035	1005	975	945	915	885	850	825	795	765
	19		1055	1025	995	965	935	905	875	845	815	785
	20		1090	1060	1030	1000	975	945	915	885	855	830
	21		1120	1090	1060	1030	1005	975	945	920	890	865
	22		1140	1110	1080	1055	1025	1000	970	945	915	890
	23		1190	1160	1135	1105	1080	1055	1030	1000	975	950
	24		1230	1200	1175	1150	1120	1095	1070	1045	1020	995
	25	High Cooling	1255	1230	1205	1175	1155	1125	1100	1075	1050	1025
0601716	1	Cont. Fan	600	540	475	410	345	290	230	160	-	-
	2		650	590	535	475	410	355	295	240	175	-
	3		720	665	610	555	500	440	385	335	275	220
	4		760	710	655	605	550	490	440	390	340	290
	5	Low Heating	780	730	680	630	575	515	465	420	370	325
	6		835	790	745	695	645	595	540	490	450	405
	7		895	845	805	755	710	665	615	565	515	475
	8		960	915	875	835	790	750	705	655	605	560
	9		1005	965	925	885	845	805	765	720	675	625
	10	High Heating	1040	1000	960	920	880	840	800	760	715	670
	11		1095	1055	1020	980	945	905	870	830	790	750
	12		1165	1130	1095	1060	1025	985	950	915	880	845
	13	Low Cooling	1235	1200	1165	1130	1095	1065	1030	1000	965	930
	14		1270	1240	1205	1170	1140	1110	1075	1045	1015	980
	15		1310	1275	1245	1215	1185	1150	1120	1090	1060	1030
	16		1345	1310	1280	1250	1220	1190	1155	1130	1095	1065
	17		1370	1340	1310	1280	1250	1220	1190	1160	1130	1105
	18		1410	1380	1350	1320	1290	1260	1230	1205	1175	1145
	19		1445	1415	1385	1355	1330	1300	1275	1245	1215	1190
	20		1480	1450	1420	1395	1365	1340	1310	1285	1260	1235
	21		1515	1485	1460	1430	1405	1380	1355	1325	1300	1275
	22		1550	1525	1500	1475	1450	1425	1400	1375	1350	1325
	23		1590	1565	1540	1515	1490	1470	1445	1420	1395	1370
	24		1625	1600	1575	1550	1525	1505	1475	1445	1410	1380
	25	High Cooling	1700	1665	1630	1595	1565	1530	1495	1460	1420	1385

Manufacturer reserves the right to change, at any time, specifications and designs without notice and without obligations.

Air Delivery - CFM (with filter) (Continued)

Unit Size	Airflow Setting	Default Setting	External Static Pressure (in. w.c.)									
			0.1	0.2	0.3	0.4	0.5	0.6	0.7	0.8	0.9	1.0
0801716	1	Cont. Fan	535	465	390	320	255	180	130	-	-	-
	2		590	525	460	385	325	265	200	135	-	-
	3		640	580	515	450	390	330	275	210	150	-
	4		710	650	595	535	475	420	365	315	255	195
	5		770	715	665	610	555	495	445	395	345	295
	6		830	780	725	680	625	570	520	470	425	380
	7		880	835	785	740	690	645	590	540	495	455
	8		955	910	865	820	775	730	680	630	585	540
	9		1015	975	930	890	845	805	760	715	670	625
	10	Low Heating	1050	1005	965	925	880	840	800	755	710	665
	11		1075	1035	995	955	915	875	835	795	750	705
	12		1150	1110	1075	1035	995	960	920	885	845	800
	13		1215	1175	1140	1105	1070	1035	995	960	925	890
	14	Low Cooling	1290	1255	1220	1185	1150	1115	1085	1050	1015	980
	15		1310	1275	1240	1205	1175	1140	1105	1075	1040	1005
	16	High Heating	1350	1320	1285	1250	1220	1185	1155	1125	1090	1060
	17		1435	1400	1370	1340	1305	1275	1245	1215	1185	1155
	18		1475	1440	1410	1380	1350	1320	1285	1255	1230	1200
	19		1510	1480	1450	1420	1390	1360	1330	1300	1270	1245
	20		1545	1515	1485	1455	1425	1395	1365	1340	1310	1280
	21		1575	1545	1515	1485	1460	1430	1400	1370	1345	1315
	22		1615	1590	1560	1530	1505	1475	1445	1415	1390	1360
	23		1660	1630	1605	1570	1545	1515	1490	1460	1430	1405
	24	High Cooling	1710	1685	1655	1625	1600	1570	1540	1500	1455	1415
	25		1755	1730	1700	1665	1625	1580	1540	1500	1455	1415
0802120	1	Cont. Fan	640	550	455	365	270	180	-	-	-	-
	2		720	635	550	465	380	295	210	180	-	-
	3		825	750	670	595	515	445	365	285	220	190
	4		885	815	740	665	595	520	455	375	300	240
	5		975	910	840	770	700	635	570	510	435	370
	6	Low Heating	1085	1025	960	895	835	770	710	650	590	530
	7		1160	1100	1040	980	920	860	805	745	685	630
	8		1255	1200	1145	1085	1030	975	915	865	810	755
	9		1345	1290	1240	1185	1135	1080	1025	975	920	870
	10	High Heating	1385	1335	1285	1235	1180	1130	1080	1025	975	925
	11		1430	1375	1325	1280	1230	1175	1125	1075	1025	980
	12		1545	1495	1450	1405	1360	1315	1265	1220	1170	1125
	13		1620	1575	1530	1485	1440	1395	1350	1305	1260	1215
	14	Low Cooling	1670	1630	1585	1540	1500	1460	1415	1370	1325	1285
	15		1725	1680	1640	1595	1555	1515	1475	1430	1390	1350
	16		1775	1735	1695	1650	1615	1575	1535	1490	1450	1410
	17		1825	1785	1745	1705	1665	1630	1590	1550	1510	1470
	18		1875	1835	1795	1760	1720	1685	1645	1610	1570	1535
	19		1925	1885	1850	1810	1775	1740	1705	1665	1630	1595
	20		1955	1920	1885	1850	1815	1780	1745	1710	1675	1640
	21		1995	1960	1925	1895	1860	1825	1795	1760	1725	1690
	22		2050	2015	1980	1950	1915	1885	1855	1820	1790	1755
	23		2105	2075	2040	2010	1980	1945	1915	1885	1850	1825
	24		2205	2170	2140	2110	2080	2045	2010	1970	1925	1880
	25	High Cooling	2280	2240	2195	2150	2110	2065	2020	1980	1935	1890

Manufacturer reserves the right to change, at any time, specifications and designs without notice and without obligations.

Air Delivery - CFM (with filter) (Continued)

Unit Size	Airflow Setting	Default Setting	External Static Pressure (in. w.c.)									
			0.1	0.2	0.3	0.4	0.5	0.6	0.7	0.8	0.9	1.0
1002120	1	Cont. Fan	700	605	515	420	340	260	175	-	-	-
	2		775	690	605	515	435	360	285	210	135	-
	3		845	765	685	605	520	445	380	310	235	165
	4		940	870	795	720	645	565	500	435	375	305
	5		1030	960	890	820	755	685	615	550	485	430
	6		1110	1050	985	915	850	790	725	655	595	535
	7		1210	1155	1095	1030	970	910	855	790	730	670
	8		1305	1250	1195	1135	1080	1020	965	910	855	795
	9		1370	1320	1265	1210	1155	1100	1045	995	940	890
	10	Low Heating	1425	1370	1320	1270	1220	1165	1110	1060	1010	960
	11		1475	1425	1375	1325	1275	1225	1170	1120	1070	1025
	12		1525	1480	1430	1380	1335	1285	1235	1185	1135	1090
	13		1575	1530	1485	1435	1390	1340	1290	1245	1195	1150
	14	Low Cooling	1670	1625	1580	1535	1490	1445	1400	1355	1310	1265
	15	High Heating	1760	1715	1675	1630	1590	1545	1505	1460	1415	1375
	16		1810	1770	1730	1690	1645	1605	1565	1525	1480	1440
	17		1865	1820	1780	1745	1705	1665	1625	1585	1545	1505
	18		1905	1865	1825	1785	1750	1710	1670	1635	1595	1555
	19		1945	1905	1865	1830	1795	1755	1715	1680	1640	1605
	20		1995	1955	1920	1885	1850	1815	1780	1740	1705	1670
	21		2045	2005	1970	1935	1900	1865	1835	1800	1765	1730
	22		2090	2055	2020	1985	1955	1920	1890	1855	1820	1790
	23	High Cooling	2140	2105	2070	2035	2005	1975	1945	1910	1875	1845
	24		2225	2195	2165	2135	2100	2075	2045	2010	1975	1930
	25		2340	2295	2255	2210	2170	2125	2080	2040	1990	1945
1002122	1	Cont. Fan	905	810	715	625	525	425	345	260	135	-
	2		970	880	790	705	615	520	430	350	275	150
	3		1060	980	895	815	735	645	560	470	395	325
	4		1140	1065	985	905	830	755	670	585	505	430
	5		1235	1170	1100	1020	945	880	810	730	650	570
	6	Low Heating	1305	1245	1180	1105	1035	965	900	830	755	680
	7		1375	1315	1255	1185	1115	1050	990	925	855	780
	8		1440	1385	1325	1265	1195	1130	1070	1010	950	880
	9		1505	1450	1395	1335	1275	1210	1150	1090	1030	970
	10		1585	1535	1485	1425	1370	1305	1245	1190	1135	1080
	11	Low Cooling	1685	1635	1585	1535	1480	1425	1365	1310	1255	1205
	12		1740	1695	1645	1595	1545	1490	1435	1380	1325	1275
	13	High Heating	1780	1730	1685	1635	1585	1535	1480	1425	1370	1320
	14		1835	1790	1740	1695	1645	1600	1550	1495	1440	1390
	15		1885	1840	1795	1750	1705	1660	1610	1565	1510	1455
	16		1940	1895	1850	1810	1765	1720	1675	1625	1575	1525
	17		1990	1950	1905	1860	1820	1770	1730	1690	1640	1590
	18		2040	2000	1955	1920	1875	1830	1785	1745	1700	1650
	19		2090	2050	2005	1970	1925	1890	1845	1800	1760	1710
	20		2150	2110	2070	2030	1990	1950	1910	1870	1830	1790
	21		2205	2165	2130	2095	2050	2010	1975	1935	1895	1860
	22	High Cooling	2240	2200	2165	2125	2085	2050	2010	1975	1940	1900
	23		2305	2270	2235	2195	2160	2125	2090	2055	2020	1980
	24		2385	2350	2315	2280	2240	2200	2155	2110	2055	2005
	25		2425	2385	2340	2295	2250	2200	2155	2110	2060	2010

Manufacturer reserves the right to change, at any time, specifications and designs without notice and without obligations.

Air Delivery - CFM (with filter) (Continued)

Unit Size	Airflow Setting	Default Setting	External Static Pressure (in. w.c.)									
			0.1	0.2	0.3	0.4	0.5	0.6	0.7	0.8	0.9	1.0
1202422	1	Cont. Fan	585	475	360	265	165	-	-	-	-	-
	2		650	550	440	340	250	155	-	-	-	-
	3		705	615	510	410	320	240	150	-	-	-
	4		775	690	600	500	410	335	255	175	-	-
	5		875	790	710	625	535	455	380	310	235	155
	6		970	885	815	735	655	575	500	425	360	290
	7		1055	975	905	835	765	685	610	545	470	410
	8		1130	1060	990	925	855	785	710	640	570	510
	9		1205	1130	1065	1005	940	875	805	735	670	605
	10		1225	1155	1090	1030	965	900	835	765	700	640
	11		1315	1250	1185	1130	1070	1010	950	885	820	755
	12		1400	1340	1280	1220	1165	1110	1050	990	930	870
	13		1500	1440	1380	1325	1275	1220	1170	1115	1055	1000
	14		1590	1535	1480	1425	1375	1325	1275	1225	1175	1120
	15	Low Heating	1610	1555	1500	1445	1395	1345	1295	1245	1195	1140
	16		1645	1590	1540	1485	1435	1385	1335	1290	1240	1190
	17	Low Cooling	1740	1690	1635	1585	1535	1485	1440	1395	1345	1300
	18		1785	1735	1685	1635	1585	1540	1495	1445	1400	1355
	19		1880	1830	1785	1735	1690	1645	1600	1555	1510	1470
	20		1970	1920	1875	1830	1785	1740	1700	1655	1615	1570
	21		2055	2005	1960	1915	1870	1820	1780	1735	1695	1655
	22	High Heating	2090	2045	2000	1955	1915	1870	1830	1785	1745	1705
	23		2180	2140	2095	2055	2015	1970	1930	1890	1850	1810
	24	High Cooling	2270	2230	2185	2145	2100	2060	2005	1945	1885	1825
	25		2360	2305	2245	2185	2130	2070	2005	1945	1885	1825

NOTE:

1. A filter is required for each return-air inlet. Airflow performance included 3/4-in. (19 mm) washable filter media such as contained in a factory - authorized accessory filter rack. See accessory list. To determine airflow performance without this filter, assume an additional 0.1 in. w.c. available external static pressure.
2. **Adjust the blower airflow settings as necessary for the proper air temperature rise for each installation.**
3. Airflows over 1800 CFM require bottom return, two-side return, or bottom and side return. A minimum filter size of 20” x 25” (508 x 635 mm) is required.
4. For upflow applications, air entering from one side into both the side of the furnace and a return air base counts as a side and bottom return
5. The -- entry indicates unstable operating conditions

Airflow Settings

	Default Airflow Settings*		Designated Airflow Settings		Designated Airflow Settings		
Unit Size	High Heating	Low Heating	High Cooling	Low Cooling	High Heating	Low Heating	Const. Fan
0401410	14	8	25	18	(10 - 18)	(5 - 10)	(1 - 3)
0401712	9	4	24	13	(5 - 12)	(3 - 7)	(1 - 5)
0601412	18	9	25	15	(12 - 23)	(6 - 11)	(1 - 3)
0601716	10	5	25	13	(6 - 13)	(3 - 8)	(1 - 8)
0801716	16	10	24	14	(12 - 19)	(6 - 12)	(1 - 5)
0802120	10	6	25	14	(6 - 13)	(3 - 9)	(1 - 8)
1002120	15	10	23	14	(10 - 19)	(5 - 12)	(1 - 3)
1002122	13	6	22	11	(9 - 17)	(3 - 11)	(1 - 9)
1202422	22	15	24	17	(16 - 23)	(10 - 16)	(1 - 3)

*. Setting #1 is the default setting for Constant Fan

TYPICAL WIRING SCHEMATIC

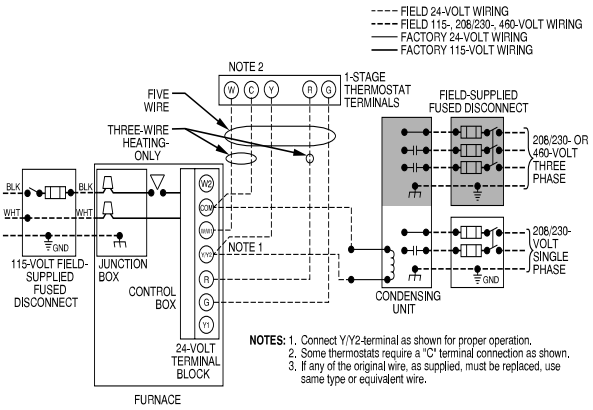

A230059

FURNACE CONTROL BOARD

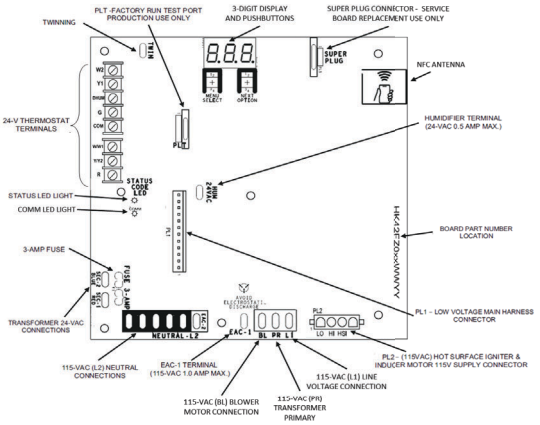

A221518

MAXIMUM ALLOWABLE EXPOSED VENT LENGTH

Maximum Allowable Exposed Vent Lengths in Unconditioned Space Insulation Table - Ft.

Winter Design Temp °F	Unit Size	40,000* BTUH									60,000 BTUH											
		Uninsulated			3/8-in. Insulation			1/2-in. Insulation			Uninsulated				3/8-in. Insulation				1/2-in. Insulation			
	Pipe Dia. in.	1 ½	2	2 ½	1 ½	2	2 ½	1 ½	2	2 ½	1 ½	2	2 ½	3	1 ½	2	2 ½	3	1 ½	2	2 ½	3
	20	20	20	20	20	50	45	20	60	50	20	30	30	25	20	75	65	60	20	85	75	65
	0	10	5	5	20	25	20	20	30	25	15	15	10	10	20	40	30	25	20	45	40	30
	-20	5			20	15	10	20	20	15	10	5			20	25	20	15	20	30	25	20
	-40				15	10	5	15	15	10	5				20	15	15	10	20	20	15	10

*. Not all model families have this size.

Winter Design Temp °F	Unit Size	80,000 BTUH														
		Uninsulated					3/8-in. Insulation					1/2-in. Insulation				
	Pipe Dia. in.	1 ½	2	2 ½	3	4	1 ½	2	2 ½	3	4	1 ½	2	2 ½	3	4
	20	15	40	40	35	30	15	50	90	75	65	15	50	70	70	70
	0	15	20	15	10	5	15	50	45	35	30	15	50	50	40	35
	-20	15	10	5			15	35	30	20	15	15	40	30	25	15
	-40	10	5				15	25	20	15	5	15	30	25	20	10

Winter Design Temp °F	Unit Size	100,000 BTUH												120,000 BTUH								
		Uninsulated				3/8-in. Insulation				1/2-in. Insulation				Uninsulated			3/8-in. Insulation			1/2-in. Insulation		
	Pipe Dia. in.	2	2 ½	3	4	2	2½	3	4	2	2½	3	4	2 ½	3	4	2 ½	3	4	2 ½	3	4
	20	20	50	40	35	20	80	95	80	20	80	105	90	10	50	40	10	75	95	10	75	105
	0	20	20	15	10	20	55	45	35	20	65	55	45	10	20	15	10	55	45	10	65	50
	-20	15	10	5		20	35	30	20	20	45	35	25	10	10		10	35	25	10	45	30
	-40	10	5			20	25	20	10	20	30	25	15	10	5		10	25	15	10	30	20

Maximum Allowable Exposed Vent Length in Unconditioned Space - Meters

Winter Design Temp °C	Unit Size	40,000* BTUH									60,000 BTUH											
		Uninsulated			3/8-in. Insulation			1/2-in. Insulation			Uninsulated				3/8-in. Insulation				1/2-in. Insulation			
	Pipe Dia. mm	38	51	64	38	51	64	38	51	64	38	51	64	76	38	51	64	76	38	51	64	76
	-7	6.1	6.1	6.1	6.1	15.2	13.7	6.1	18.3	15.2	6.1	9.1	9.1	7.6	6.1	22.9	19.8	18.3	6.1	25.9	22.9	19.8
	-18	3.0	1.5	1.5	6.1	7.6	6.1	6.1	9.1	7.6	4.6	4.6	3.0	3.0	6.1	12.2	9.1	7.6	6.1	13.7	12.2	9.1
	-29	1.5			6.1	4.6	3.0	6.1	6.1	4.6	3.0	1.5			6.1	7.6	6.1	4.6	6.1	9.1	7.6	6.1
	-40				4.6	3.0	1.5	4.6	4.6	3.0	1.5				6.1	4.6	4.6	3.0	6.1	6.1	4.6	3.0

*. Not all model families have this size.

Winter Design Temp °C	Unit Size	80,000 BTUH														
		Uninsulated					3/8-in. Insulation					1/2-in. Insulation				
	Pipe Dia. mm	38	51	64	76	102	38	51	64	76	102	38	51	64	76	102
	-7	4.6	12.2	12.2	10.7	9.1	4.6	15.2	27.4	22.9	19.8	4.6	15.2	21.3	21.3	21.3
	-18	4.6	6.1	4.6	3.0	1.5	4.6	15.2	13.7	10.7	9.1	4.6	15.2	15.2	12.2	10.7
	-29	4.6	3.0	1.5			4.6	10.7	9.1	6.1	4.6	4.6	12.2	9.1	7.6	4.6
	-40	3.0	1.5				4.6	7.6	6.1	4.6	1.5	4.6	9.1	7.6	6.1	3.0

Winter Design Temp °C	Unit Size	100,000 BTUH												120,000 BTUH								
		Uninsulated				3/8-in. Insulation				1/2-in. Insulation				Uninsulated			3/8-in. Insulation			1/2-in. Insulation		
	Pipe Dia. mm	51	64	76	102	51	64	76	102	51	64	76	102	64	76	102	64	76	102	64	76	102
	-7	6.1	15.2	12.2	10.7	6.1	24.4	28.9	24.4	6.1	24.4	32.0	27.4	3.0	15.2	12.2	3.0	22.9	28.9	3.0	22.9	32.0
	-18	6.1	6.1	4.6	3.0	6.1	16.8	13.7	10.7	6.1	19.8	16.7	13.7	3.0	6.1	4.6	3.0	16.8	13.7	3.0	19.8	15.2
	-29	4.6	3.0	1.5		6.1	10.7	9.1	6.1	6.1	13.7	10.7	7.6	3.0	3.0		3.0	10.7	7.6	3.0	13.7	9.1
	-40	3.0	1.5			6.1	7.6	6.1	3.0	6.1	9.1	7.6	4.6	3.0	1.5		3.0	7.6	4.6	3.0	9.1	6.1

Maximum Equivalent Vent Length - Ft. (M)

NOTE: Maximum Equivalent Vent Length (MEVL) includes standard and concentric vent termination and does NOT include elbows. Use Deductions from Maximum Equivalent Vent Length to determine allowable vent length for each application.

Table 1 – Maximum Equivalent Vent Length

Unit Size		40,000*			60,000 †				80,000 ‡					100,000 **				120,000		
	Pipe Dia. (in)	1 ½	2	2 ½	1 ½	2	2 ½	3	1 ½	2	2 ½	3	4	2	2 ½	3	4	2 ½	3	4
Altitude (feet)	0-2000	40	155	185	20	100	175	200	15	55	130	175	200	20	80	175	200	10	75	185
	2001-3000	35	150	175		95	165	185	10	49	125	165	185	15	75	165	185		70	175
	3001-4000	30	135	160	16	90	155	175			115	155	175			155	175	5	65	165
	4001-4500	25	130	155	15	85	150	170		44	110	150	165	10	70		170	N/A	60	160
	4501-5000		125	145		80	145	165				145	160		65	150	165			
	5001-6000	20	120	130		75	140	155		41	100	135	150			140	155			155
	6001-7000	15	110	120	13	70	130	145	N/A	38	90	125	140		60	135	145		50	140
	7001-8000	10	100	110	10	65	120	135		36		120	125	N/A	55	125	135		46	130
	8001-9000		90	95	5	60	115	125		33	80	110	115		50	115	125		43	120
	9001-10000	5	80	85	N/A	55	105	115		30	75	100	105		45	100	115		39	115
Maximum Equivalent Vent Length - Meters																				
Unit Size		**40,000***			**60,000 †**				**80,000 ‡**					**100,000 ****				**120,000**		
Altitude (meters)	Pipe Dia. (mm)	38	51	64	38	51	64	76	38	51	64	76	102	51	64	76	102	64	76	102
	0-610	12.1	47.2	56.3	6.0	30.4	53.3	60.9	4.5	16.7	39.6	53.3	60.9	6.0	24.3	53.3	60.9	3.0	22.8	56.3
	611-914	10.6	45.7	53.3		28.9	50.2	56.3	3.0	14.9	38.1	50.2	56.3	4.5	22.8	50.2	56.3		21.3	53.3
	915-1219	9.1	41.1	48.7	4.8	27.4	47.2	53.3			35.0	47.2	53.3			47.2	53.3	1.5	19.8	50.2
	1220-1370	7.6	39.6	47.2	4.5	25.9	45.7	51.8		13.4	33.5	45.7	50.2	3.0	21.3		51.8	N/A	18.2	48.7
	1371-1524		38.1	44.1		24.3	44.1	50.2				44.1	48.7		19.8	45.7	50.2			
	1525-1829	6.0	36.5	39.6		22.8	42.6	47.2		12.4	30.4	41.1	45.7			42.6	47.2			47.2
	1830-2134	4.5	33.5	36.5	3.9	21.3	39.6	44.1	NA	11.5	27.4	38.1	42.6		18.2	41.1	44.1		15.2	42.6
	2135-2438	3.0	30.4	33.5	3.0	19.8	36.5	41.1		10.9		36.5	38.1	N/A	16.7	38.1	41.1		14.0	39.6
	2439-2743		27.4	28.9	1.5	18.2	35.0	38.1		10.0	24.3	33.5	35.0		15.2	35.0	38.1		13.1	36.5
	2744-3048	1.5	24.3	25.9	NA	16.7	32.0	35.0		9.1	22.8	30.4	32.0		13.7	30.4	35.0		11.8	35.0

*. 40K Inducer Outlet Restrictor disk (P/N; 1.25-in. (32 mm) Dia.) shipped in the loose parts bag or available through is required for all orientations for installations from 0–2000 ft. (0–610 M) above sea level and where TEVL is no greater than 10 ft. (3 M). Failure to use an outlet restrictor may result in flame disturbances or flame sense lockout.

†. 60K Inducer Outlet Restrictor disk (P/N ; 1.25-in. (32 mm) diameter – available through) is required in all orientations for installations from 0–2000 ft (0–610 M) above sea level and where TEVL is no greater than 5-ft. (1.5 M).

‡. 80K Inducer Outlet Restrictor disk (P/N ; 1.25-in. (32 mm) diameter – available through) is required in upflow orientation for installations from 0–2000 ft (0–610 M) above sea level and where TEVL is no greater than 5-ft. (1.5 M).

**. 100K Inducer Outlet Restrictor disk (P/N ; 1.50-in. (38 mm) diameter – available through) is required in all orientations for installations from 0–2000 ft (0–610 M) above sea level and where TEVL is no greater than 5-ft. (1.5 M).

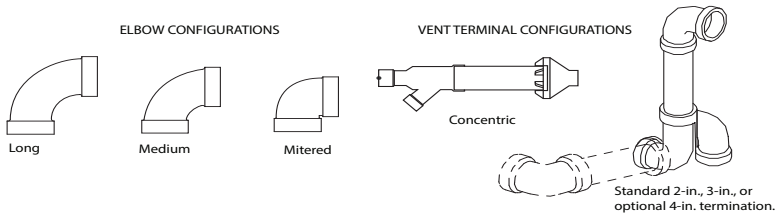

A13110

Deductions from Maximum Equivalent Vent Length - Ft. (M)

Pipe Diameter (in):	1-1/2		2		2-1/2		3		4	
Mitered 90º Elbow	8	(2.4)	8	(2.4)	8	(2.4)	8	(2.4)	8	(2.4)
Medium Radius 90º Elbow	5	(1.5)	5	(1.5)	5	(1.5)	5	(1.5)	5	(1.5)
Long Radius 90º Elbow	3	(0.9)	3	(0.9)	3	(0.9)	3	(0.9)	3	(0.9)
Mitered 45º Elbow	4	(1.2)	4	(1.2)	4	(1.2)	4	(1.2)	4	(1.2)
Medium Radius 45º Elbow	2.5	(0.8)	2.5	(0.8)	2.5	(0.8)	2.5	(0.8)	2.5	(0.8)
Long Radius 45º Elbow	1.5	(0.5)	1.5	(0.5)	1.5	(0.5)	1.5	(0.5)	1.5	(0.5)
Tee	16	(4.9)	16	(4.9)	16	(4.9)	16	(4.9)	16	(4.9)
Concentric Vent Termination	NA		0	(0.0)	NA		0	(0.0)	NA	
Standard Vent Termination	0	(0.0)	0	(0.0)	0	(0.0)	0	(0.0)	0	(0.0)

NOTE:

1. Use only the smallest diameter pipe possible for venting. Over-sizing may cause flame disturbance or excessive vent terminal icing or freeze-up.
2. NA - Not allowed. Pressure switch will not close, or flame disturbance may result.
3. Vent sizing for Canadian installations over 4500 ft (1370 M) above sea level are subject to acceptance by local authorities having jurisdiction.
4. Size both the combustion air and vent pipe independently, then use the larger size for both pipes.
5. Assume the two 45° elbows equal one 90° elbow. Wide radius elbows are desirable and may be required in some cases.
6. Elbow and pipe sections within the furnace casing and at the vent termination should not be included in vent length or elbow count.
7. The minimum pipe length is 5 ft. (2 M) linear feet (meters) for all applications.
8. Use 3-in. (76 mm) diameter vent termination kit for installations requiring 4-in. (102 mm) diameter pipe0

Manufacturer reserves the right to change, at any time, specifications and designs without notice and without obligations.

Venting System Length Calculations

The Total Equivalent Vent Length (TEVL) for **EACH** combustion air or vent pipe equals the length of the venting system, plus the equivalent length of elbows used in the venting system from Deductions from Maximum Equivalent Vent Length - Ft. (M) Table.

Standard vent terminations or factory accessory concentric vent terminations count for zero deduction.

See vent system manufacturer's data for equivalent lengths of flexible vent pipe or other termination systems. **DO NOT ASSUME** that one foot of flexible vent pipe equals one foot of straight PVC/ABS DWV vent pipe.

Compare the Total Equivalent Vent Length to the Maximum Equivalent Vent Lengths in Maximum Equivalent Vent Length Table.

Example 1

A direct-vent 60,000 BTUH furnace installed at 2100 ft. (640M). Venting system includes **FOR EACH PIPE:** 70 feet (22 M) of vent pipe, 65 feet (20 M) of combustion air inlet pipe, (3) 90º long-radius elbows, (2) 45º long-radius elbows, and a factory accessory concentric vent kit.

Can this application use 2" (50 mm ND) PVC/ABS DWV vent piping?

Measure the required linear length of air inlet and vent pipe; insert the longest of the two here					70 ft. (22 M)	Use length of the longer of the vent or air inlet piping system
Add equiv length of (3) 90º long-radius elbows (use the highest number of elbows for either the vent or inlet pipe)	3	x	3 ft. (0.9 M)	=	9 ft. (2.7 M)	From Deductions from Maximum Equivalent Vent Length - Ft. (M) Table.
Add equiv length of (2) 45º long-radius elbows (use the highest number of elbows for either the vent or inlet pipe)	2	x	1.5 ft. (0.5 M)	=	3 ft. (0.9 M)	From Deductions from Maximum Equivalent Vent Length - Ft. (M) Table.
Add equiv length of factory concentric vent term					0 ft.	From Deductions from Maximum Equivalent Vent Length - Ft. (M) Table.
Add correction for flexible vent pipe, if any					0 ft.	From Vent Manufacturer's instructions; zero for PVC/ABS DWV
Total Equivalent Vent Length (TEVL)					82 ft. (25 M)	Add all of the above lines
Maximum Equivalent Vent Length (MEVL)					95 ft. (29 M)	For 2" pipe from Maximum Equivalent Vent Length Table.
Is TEVL less than MEVL?					YES	Therefore, 2" pipe MAY be used

Example 2

A direct-vent 60,000 BTUH furnace installed at 2100 ft. (640M). Venting system includes **FOR EACH PIPE:** 100 feet (30 M) of vent pipe, 95 feet (29 M) of combustion air inlet pipe, (3) 90º long-radius elbows, and a polypropylene concentric vent kit. Also includes 20 feet (6.1 M) of flexible polypropylene vent pipe, included within the 100 feet (30 M) of vent pipe.

VERIFY FROM POLYPROPYLENE VENT MANUFACTURER'S INSTRUCTIONS for the multiplier correction for flexible vent pipe.

Can this application use 60mm o.d. (2") polypropylene vent piping? If not, what size piping can be used?

Measure the required linear length of **RIGID** air inlet and vent pipe; insert the longest of the two here: 100 ft. Of rigid pipe - 20 ft. Of flexible pipe				=	80 ft. (24 M)	Use length of the longer of the vent or air inlet piping system
Add equiv length of (3) 90º long-radius elbows (use the highest number of elbows for either the vent or inlet pipe)	3	x	5 ft. (1.5 M)	=	15 ft. (4.6 M)	Example from polypropylene vent manufacturer's instructions, Verify from vent manufacturer's instructions.
Add equiv length of 45º long-radius elbows (use the highest number of elbows for either the vent or inlet pipe)	0	x		=	0 ft. (0 M)	
Add equiv length of factory concentric vent term	9	x	3.3 ft (0.9 M)	=	30 ft. (9 M)	
Add correction for flexible vent pipe, if any	2*	x	20 ft. (6.1 M)	=	40 ft. (12.2 M)	
* VERIFY FROM VENT MANUFACTURER'S INSTRUCTIONS; For example only, assume 1 meter of flexible 60mm (2") or 80mm (3") polypropylene pipe equals 2.0 meters (6.5 ft.) of PVC/ABS pipe.						
Total Equivalent Vent Length (TEVL)					165 ft. (50 M)	Add all of the above lines
Maximum Equivalent Vent Length (MEVL)					95 ft. (29 M)	For 2" pipe from Maximum Equivalent Vent Length Table.
Is TEVL less than MEVL?					NO	Therefore, 60mm (2") pipe may NOT be used; try 80mm (3")
Maximum Equivalent Vent Length (MEVL)					185 ft. (57 M)	For 3" pipe from Maximum Equivalent Vent Length Table.
Is TEVL less than MEVL?					YES	Therefore, 80mm (3") pipe MAY be used

RETURN AIR TEMPERATURE

This furnace is designed for continuous return-air minimum temperature of 60_F (15_C) db or intermittent operation down to 55_F (13_C) db such as when used with a night setback thermometer. Return-air temperature must not exceed 80_F (27_C) db. Failure to follow these return air limits may affect reliability of heat exchangers, motors and controls.

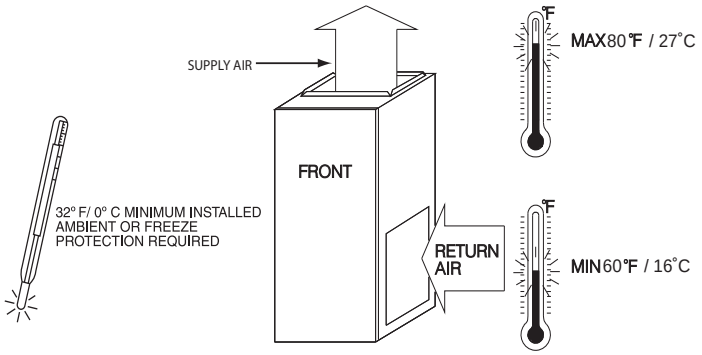

A10490

COMBUSTION-AIR PIPE FOR NON-DIRECT (1-PIPE) VENT APPLICATION

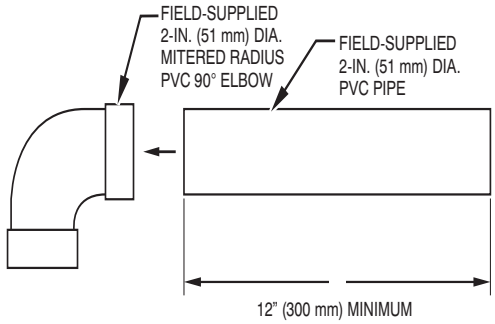

A12376

NOTE: See Installation Instructions for specific venting configurations.

DOWNFLOW SUBBASE

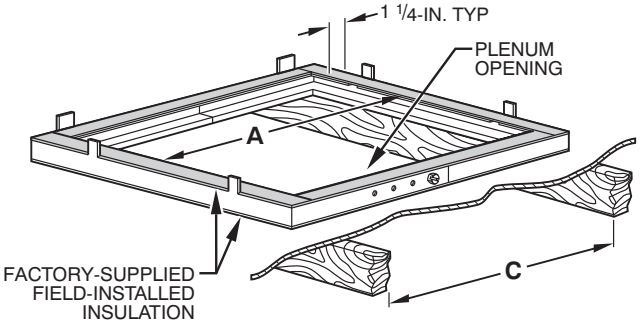

A97427

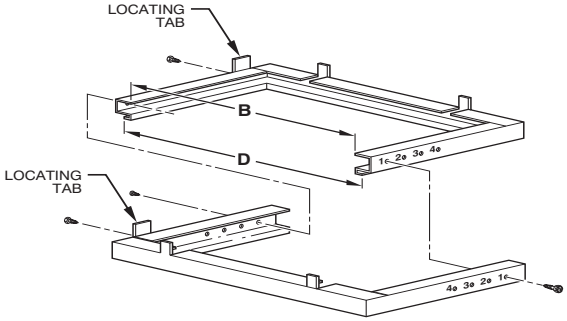

A88207

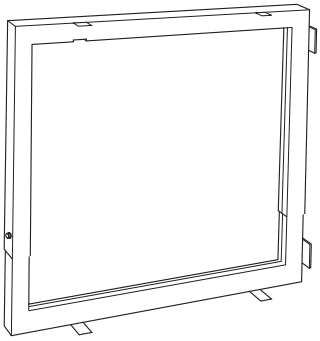

Downflow Subbase

A88202

One base fits all furnace sizes. The base is designed to be installed between the furnace and a combustible floor when no coil box is used or when a coil box other than the manufacturer's cased coil is used. It is CSA design certified for use with the manufacturer's branded furnaces when installed in downflow applications.

DIMENSIONS (IN. / MM)						
FURNACE CASING WIDTH	FURNACE IN DOWNFLOW APPLICATION	PLENUM OPENING*		FLOOR OPENING		HOLE NO. FOR WIDTH ADJUSTMENT
		A	B	C	D	
14-3/16 (360)	Furnace with or without Cased Coil Assembly or Coil Box	11-3/16 (322)	19 (483)	13-7/16 (341)	20-5/8 (600)	4
17-1/2 (445)	Furnace with or without Cased Coil Assembly or Coil Box	15-1/8 (384)	19 (483)	16-3/4 (426)	20-5/8 (600)	3
21 (533)	Furnace with or without Cased Coil Assembly or Coil Box	18-5/8 (396)	19 (483)	20-1/4 (514)	20-5/8 (600)	2
24-1/2 (622)	Furnace with or without Cased Coil Assembly or Coil Box	22-1/8 (562)	19 (483)	23-3/4 (603)	20-5/8 (600)	1

*. The plenum should be constructed 1/4-in. (6 mm) smaller in width and depth than the plenum dimensions shown above.

CONCENTRIC VENT KIT

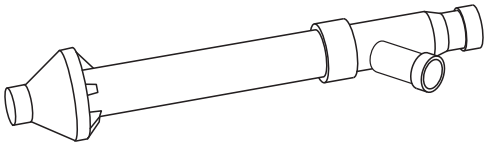

Concentric Vent Kit

A93086

A concentric vent kit allows vent and combustion-air pipes to terminate through a single exit in a roof or side wall. One pipe runs inside the other allowing venting through the inner pipe and combustion air to be drawn in through the outer pipe.

ACCESSORIES

PART NUMBER	DESCRIPTION	0401410	0401712	0601412	0601716
NAHA001NK	Condensate Neutralizer Kit	X	X	X	X
1188594*	Gas Valve Tower Port Adapter Kit	X	X	X	X
ACG1425NCB*	External Filter Rack, 14-1/2 x 25”	X	-	X	-
ACG1625NCF*	External Filter Rack, 16 x 25”	-	X	-	X
325531-402*	Washable filter, 3/4” x 16” x 25”	X	X	X	X
NAHB00101CA	Coil Adapter Kits - No Offset	X	X	X	X
NAHB00201CA	Coil Adapter Kits - Single Offset	X	X	X	X
NAHB00301CA	Coil Adapter Kits - Double Offset	X	X	X	X
NAHA01401RA	Return Air Base (Upflow Applications) 14” wide	X	-	X	-
NAHA01701RA	Return Air Base (Upflow Applications) 17-1/2” wide	-	X	-	X
NAHA002CV	Vent Terminal - Concentric - 2” (51 mm)	X	X	X	X
NAHA001CV	Vent Terminal - Concentric - 3” (76 mm)	-	-	X	X
NAHA00301VT	Vent Terminal Bracket - 2” (51 mm)	X	X	X	X
NAHA00401VT	Vent Terminal Bracket - 3” (76 mm)	-	-	X	X
NAHA00101VC	Vent Kit - Through the Cabinet	X	X	X	X
NAHA00101CK	Polypropylene Inlet Air Pipe Coupling	X	X	X	X
NAHA00101HV	Horizontal Trap Grommet - Direct Vent	X	X	X	X
NAHA00101HH	Freeze Protect Kit - Condensate Drain Line Tape	X	X	X	X
NAHA00201HH	Freeze Protect Kit - Condensate Trap with Heat Pad	X	X	X	X
NAHA00110DA	CPVC to PVC Drain Adapters - 1/2” CPVC to 3/4” PVC (10 Pack)	X	X	X	X
NAHB00101CT	External Trap Kit	X	X	X	X
NAHA00101HV	Horizontal Trap Grommet - Direct Vent	X	X	X	X
NAHA01101SB	Downflow Furnace Base Kit for Combustible Floors	X	X	X	X
AGAGC9NPS01D*	Gas Conversion Kit - Nat to LP†	X	X	X	X
AGAGC9PNS01D*	Gas Conversion Kit - LP to Nat†	X	X	X	X
AGATWNPUA01A	Twinning Kit	-	-	-	X

*. Order through FAST Parts.
†. Factory authorized and filed installed. Gas conversion kits are CSA recognized.
X = Accessory

ACCESSORIES (continued)

PART NUMBER	DESCRIPTION	0801716	0802120	1002120	1002122	1202422
NAHA001NK	Condensate Neutralizer Kit	X	X	X	X	X
1188594*	Gas Valve Tower Port Adapter Kit	X	X	X	X	X
ACG1625NCF*	External Filter Rack, 16 x 25”	X	-	-	-	-
ACG2025NCJ*	External Filter Rack, 20 x 25”	-	X	X	X	-
ACG2424NCL*	External Filter Rack, 24-1/2 x 24”	-	-	-	-	X
325531-402*	Washable filter, 3/4” x 16” x 25”	X	-	-	-	-
325531-403*	Washable filter, 3/4” x 21” x 25”	-	X	X	X	-
325531-404*	Washable filter, 3/4” x 24” x 25”	-	-	-	-	X
NAHB00101CA	Coil Adapter Kits - No Offset	X	X	X	X	X
NAHB00201CA	Coil Adapter Kits - Single Offset	X	X	X	X	X
NAHB00301CA	Coil Adapter Kits - Double Offset	X	X	X	X	X
NAHA01701RA	Return Air Base (Upflow Applications) 17-1/2” wide	X	-	-	-	-
NAHA02101RA	Return Air Base (Upflow Applications) 21” wide	-	X	X	X	-
NAHA02401RA	Return Air Base (Upflow Applications) 24-1/2 wide	-	-	-	-	X
NAHA002CV	Vent Terminal - Concentric - 2” (51 mm)	X	X	X	X	X
NAHA001CV	Vent Terminal - Concentric - 3” (76 mm)	X	X	X	X	X
NAHA00301VT	Vent Terminal Bracket - 2” (51 mm)	X	X	X	X	X
NAHA00401VT	Vent Terminal Bracket - 3” (76 mm)	X	X	X	X	X
NAHA00101VC	Vent Kit - Through the Cabinet	X	X	X	X	X
NAHA00101CK	Polypropylene Inlet Air Pipe Coupling	X	X	X	X	X
NAHA00101HH	Freeze Protect Kit - Condensate Drain Line Tape	X	X	X	X	X
NAHA00201HH	Freeze Protect Kit - Condensate Trap with Heat Pad	X	X	X	X	X
NAHA00110DA	CPVC to PVC Drain Adapters - 1/2” CPVC to 3/4” PVC (10 Pack)	X	X	X	X	X
NAHB00101CT	External Trap Kit	X	X	X	X	X
NAHA00101HV	Horizontal Trap Grommet - Direct Vent	X	X	X	X	X
NAHA01101SB	Downflow Furnace Base Kit for Combustible Floors	X	X	X	X	X
AGAGC9NPS01D*	Gas Conversion Kit - Nat to LP†	X	X	X	X	X
AGAGC9PNS01D*	Gas Conversion Kit - LP to Nat†	X	X	X	X	X
AGATWNPUA01A	Twinning Kit	X	X	X	-	X
NAHA00101PC	Lower Amp Kit	-	-	-	-	X

*. Order through FAST Parts.
†. Factory authorized and filed installed. Gas conversion kits are CSA recognized.
X = Accessory

ORIFICE

Part Number	Gas Type	Orifice Size
1185612	Natural	42
1176928	Natural	43
1185574	Natural	44
1177213	Natural	45

Part Number	Gas Type	Orifice Size
1183809	Natural	46
1185613	Natural	47
1185614	Natural	48

Part Number	Gas Type	Orifice Size
1184256	Propane	54
1185615	Propane	55
1185616	Propane	56
1185617	Propane	1.25 mm
1185618	Propane	1.30 mm

GUIDE SPECIFICATIONS

General

System Description

Furnish a _____ 4-way multipoise gas-fired condensing furnace for use with natural gas or propane (factory-authorized conversion kit required for propane).

Quality Assurance

Unit will be designed, tested and constructed to the current ANSI Z 21.47/CSA 2.3 design standard for gas-fired central furnaces.

Unit will be third party certified by CSA to the current ANSI Z 21.47/CSA 2.3 design standard for gas-fired central furnaces. Unit will carry the CSA Blue Star® and Blue Flame® labels. Unit efficiency testing will be performed per the current DOE test procedure as listed in the Federal Register.

Unit will be certified for capacity and efficiency and listed in the latest AHRI Consumer's Directory of Certified Efficiency Ratings.

Unit will carry the current Federal Trade Commission Energy Guide efficiency label.

Delivery, Storage, and Handling

Unit will be shipped as single package only and is stored and handled per unit manufacturer's recommendations.

Warranty (for inclusion by specifying engineer)

U.S. and Canada only. Warranty certificate available upon request.

Equipment

Blower Wheel and ECM Blower Motor

Galvanized blower wheel shall be centrifugal type, statically and dynamically balanced. Blower motor of ECM type shall be permanently lubricated with sealed ball bearings, of _____HP, and have multiple speeds from 600-1200 RPM operating only when 24-VAC motor inputs are provided. Blower motor shall be direct drive and soft mounted to the blower housing to reduce vibration transmission.

Filters

Furnace shall have reusable-type filters.

Filter shall be _____ in. (mm) x_____ in. (mm).

An accessory highly efficient Media Filter is available as an option. _____ Media Filter.

Casing

Casing shall be of 0.030 in. thickness minimum, pre-painted steel.

Draft Inducer Motor

Draft inducer motor shall be single-speed PSC design.

Primary Heat Exchangers

Primary heat exchangers shall be 3-Pass corrosion-resistant aluminized steel of fold-and-crimp sectional design and applied operating under negative pressure.

Secondary Heat Exchangers

Secondary heat exchangers shall be of a stainless steel flow-through of fin-and-tube design and applied operating under negative pressure.

Controls

Controls shall include a micro-processor-based integrated electronic control board with at least 16 service troubleshooting codes displayed via diagnostic flashing LED light on the control, a self-test feature that checks all major functions of the furnace, and a replaceable automotive-type circuit protection fuse. Multiple operational settings available, including blower speeds for heating and cooling.

Operating Characteristics

Heating capacity shall be _____ Btuh input; _____ Btuh output capacity.

Fuel Gas Efficiency shall be _____AFUE.

Air delivery shall be _____ cfm minimum at 0.50 in. W.C. external static pressure.

Dimensions shall be: depth_____in. (mm); width _____in. (mm); height_____in. (mm) (casing only).

Height shall be_____in. (mm) with A/C coil and _____in. (mm) overall with plenum.

Electrical Requirements

Electrical supply shall be 115 volts, 60 Hz, single-phase (nominal). Minimum wire size shall be _____AWG; maximum fuse size of HACR-type designated circuit breaker shall be _____ amps.

Special Features

Refer to section of the product data identifying accessories and descriptions for specific features and available enhancements.

© 2024 Carrier. All rights reserved.

Manufacturer reserves the right to change, at any time, specifications and designs without notice and without obligations.