N80MSN/N80MSL
80% AFUE, Single-Stage, Multi 18-Speed ECM,
Non-Condensing Gas Furnaces

Product Data

A200116

Representative drawing only. Some product models may vary.

WARNING

This furnace is not designed for use in mobile homes, trailers, or recreational vehicles. Such use could result in property damage and/or death.

Use of the AHRI Certified TM Mark indicates a manufacturer's participation in the program. For verification of certification for individual products, go to www.ahridirectory.org .

ISO 9001 Quality

A200115

EASIER TO SELL

- Multi 18-Speed, Constant Torque (MCT) ECM blower motor
- Enhanced diagnostics with easy to read 3 digit display for faults and status
- 80% AFUE
- Flame roll-out sensors standard
- Category I venting
- Blocked vent switch
- Louvered door
- 24 VAC humidifier terminal
- Electronic air cleaner terminal
- Select sizes approved for twinning, refer to accessory kit listing
- N80MSL - Low NOx units are designed for California installations and can be installed in air quality management districts with a 40ng/J NOx emissions limit
- Cabinet air leakage less than 2.0% at 1.0 in. w.c. and cabinet air leakage less than 1.4% at 0.5 in. w.c. when tested in accordance with ASHRAE standard 193

TOUGHER

- Adjustable heating blower OFF delay
- Factory set blower ON delay

EASIER TO INSTALL AND SERVICE

- On-board NFC antenna makes setup a tap away when using the service technician app
- 33-1/3" (847mm) high, for ease of installation
- Quarter turn knobs for easy door removal and secure attachment
- Convertible to propane gas conversion accessory kit
- Twinning capable with accessory kit
- Four position - upflow/downflow/horizontal (left/right) installation
- Three position vent elbow capability
- Through the casing flue pipe for counterflow applications
- Common venting with other Category I appliances
- Masonry chimney adapter available
- Slide out blower assembly

LIMITED WARRANTY*

- 20 year heat exchanger limited warranty
- 5 year parts limited warranty

- With timely registration, an addition 5 year parts limited warranty

* For residential applications only, see warranty certificate for complete details and restrictions, including warranty coverage of other applications

DIMENSIONAL DATA

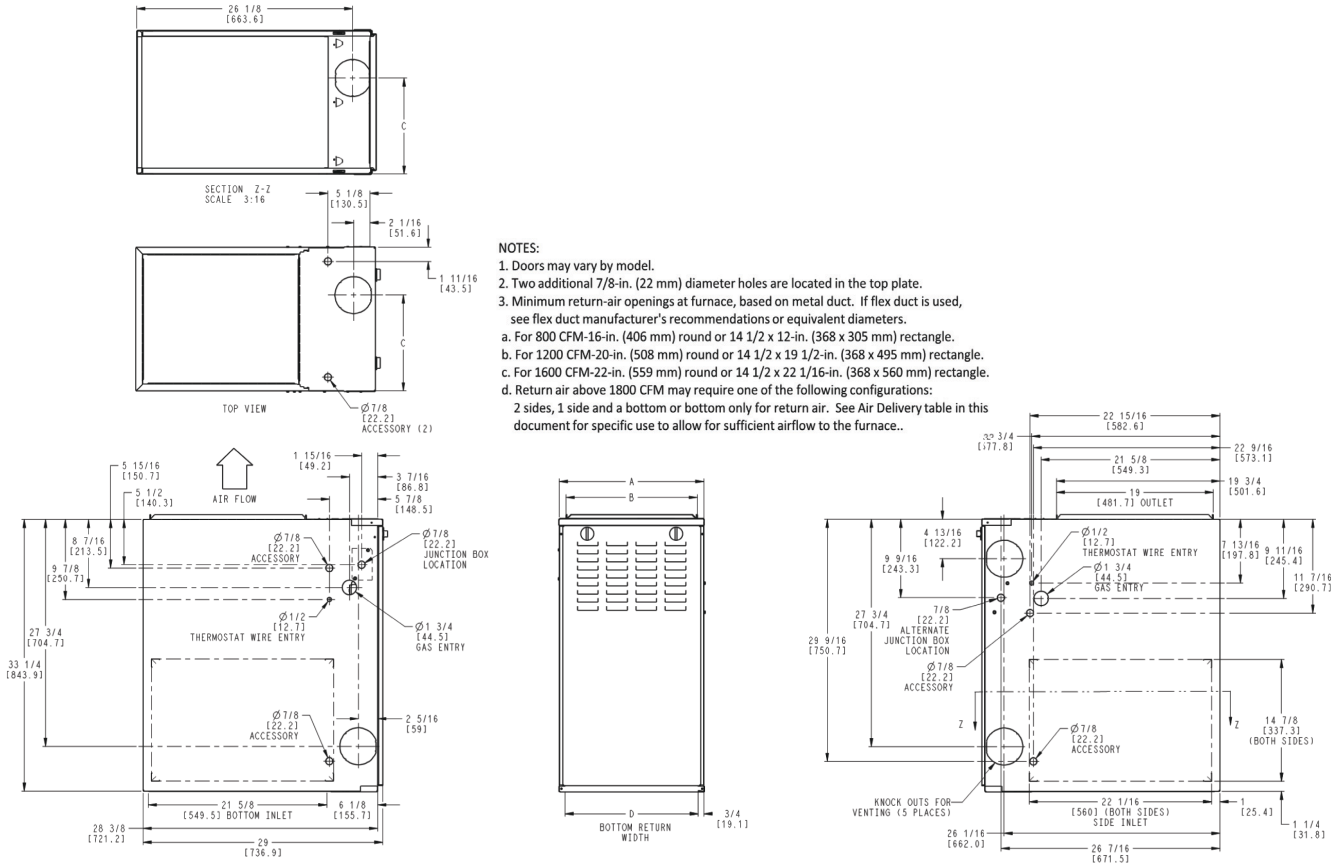

NOTES:
1. Doors may vary by model.
2. Two additional 7/8-in. (22 mm) diameter holes are located in the top plate.
3. Minimum return-air openings at furnace, based on metal duct. If flex duct is used, see flex duct manufacturer's recommendations or equivalent diameters.
a. For 800 CFM-16-in. (406 mm) round or 14 1/2 x 12-in. (368 x 305 mm) rectangle.
b. For 1200 CFM-20-in. (508 mm) round or 14 1/2 x 19 1/2-in. (368 x 495 mm) rectangle.
c. For 1600 CFM-22-in. (559 mm) round or 14 1/2 x 22 1/16-in. (368 x 560 mm) rectangle.
d. Return air above 1800 CFM may require one of the following configurations: 2 sides, 1 side and a bottom or bottom only for return air. See Air Delivery table in this document for specific use to allow for sufficient airflow to the furnace..

NOTE: ALL DIMENSIONS IN INCH (MM)

U.S. ECCN: Not Subject to Regulation (N.S.R.)

SD5669-4 REV. -

A210785

Dimensions

Unit Size	A CABINET WIDTH	B OUTLET WIDTH	C TOP AND BOTTOM FLUE COLLAR	D BOTTOM INLET WIDTH	VENT CONNECTION SIZE	SHIP WT. LB. (KG)
0451412	14-3/16 (360)	12-9/16 (319)	9-5/16 (237)	12-11/16 (322)	4 (102)	108 (49)
0451714	17-1/2 (445)	15-7/8 (403)	11-9/16 (294)	16 (406)	4 (102)	121 (55)
0701412	14-3/16 (360)	12-9/16 (319)	9-5/16 (237)	12-11/16 (322)	4 (102)	114 (52)
0701712	17-1/2 (445)	15-7/8 (403)	11-9/16 (294)	16 (406)	4 (102)	124 (56)
0701716	17-1/2 (445)	15-7/8 (403)	11-9/16 (294)	16 (406)	4 (102)	127 (58)
0702116	21 (533)	19-3/8 (492)	13-5/16 (338)	19-1/2 (495)	4 (102)	139.5 (63)
0901714	17-1/2 (445)	15-7/8 (403)	11-9/16 (294)	16 (406)	4 (102)	133 (60)
0902116	21 (533)	19-3/8 (492)	13-5/16 (338)	19-1/2 (495)	4 (102)	140.5 (64)
0902120	21 (533)	19-3/8 (492)	13-5/16 (338)	19-1/2 (495)	4 (102)	147 (67)
0902420	24-1/2 (622)	22-7/8 (581)	15-1/16 (383)	23 (584)	4 (102)	150 (68)
1102120	21 (533)	19-3/8 (492)	13-5/16 (338)	19-1/2 (495)	4 (102)	150 (68)
1102420	24-1/2 (622)	22-7/8 (581)	15-1/16 (383)	23 (584)	4 (102)	165 (75)
1352420	24-1/2 (622)	22-7/8 (581)	15-1/16 (383)	23 (584)	4 (102)*	167 (76)
1552420	24-1/2 (622)	22-7/8 (581)	15-1/16 (383)	23 (584)	4 (102)*	171 (77)

*. 135 and 155 size furnaces requires a 5 or 6-in. (127 or 152 mm) vent. Use a vent adapter between furnace and vent stack. See Installation Instructions for complete installation requirements

Manufacturer reserves the right to change, at any time, specifications and designs without notice and without obligations.

MODEL NUMBER NOMENCLATURE

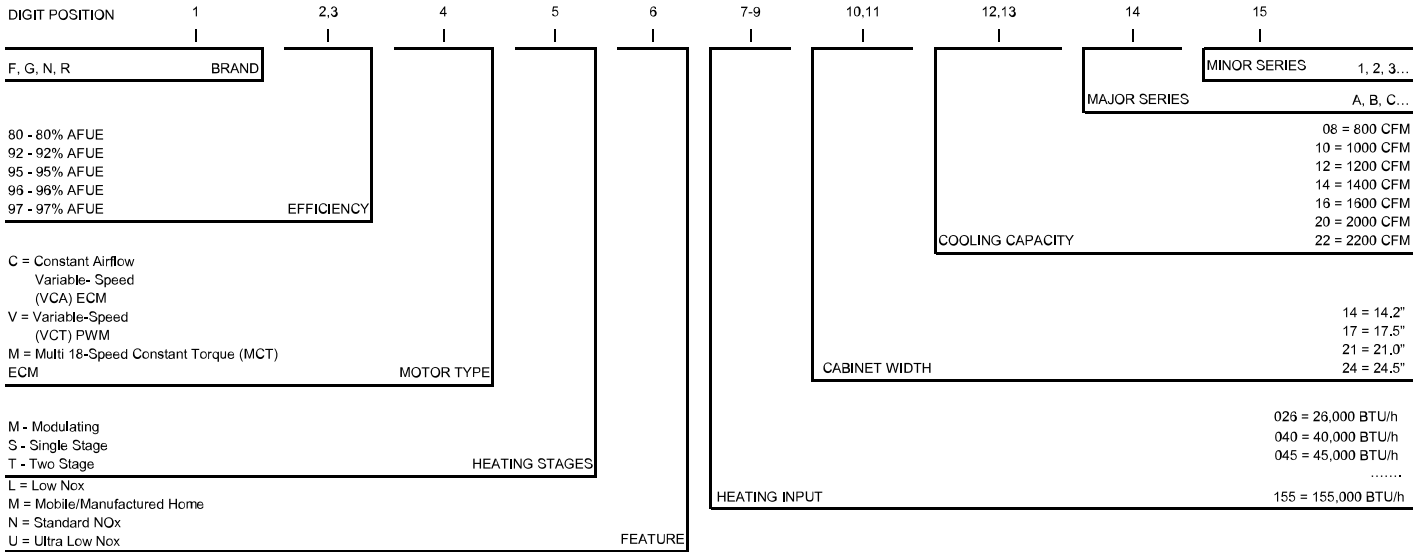

A221575

FURNACE COMPONENTS

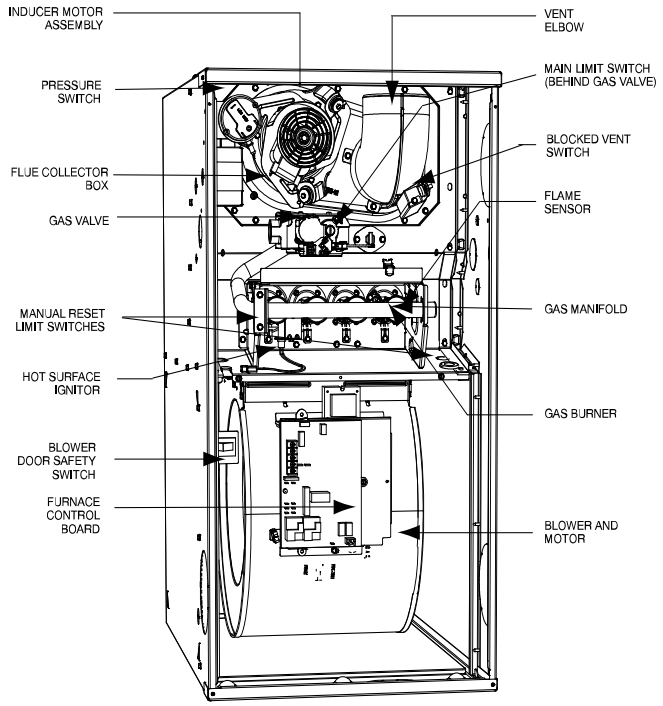

A190086

Representative drawing only, some models may vary.

The furnaces are factory shipped for use with natural gas. These furnaces can be field-converted for propane gas with a factory-authorized and listed accessory conversion kit.

CLEARANCES

⚠ WARNING — **ELECTRIC SHOCK AND MOVING PARTS HAZARD**
High voltage and rotating fan blades may be present in blower compartment when door switch is pressed. Keep hands clear.

⚠ WARNING
FIRE, EXPLOSION, ASPHYXIATION HAZARD

Improper adjustment, alteration, service, maintenance, or installation can cause serious injury or death.

Read and follow instructions and precautions in User's Information Manual provided with this furnace. Installation and service must be performed by a qualified service agency or the gas supplier.

⚠ CAUTION

Check entire gas assembly for leaks after lighting this appliance.

INSTALLATION

1. This furnace must be installed in accordance with the manufacturer's instructions and local codes. In the absence of local codes, follow the National Fuel Gas Code ANSI Z223.1 / NFPA54 or CSA B-149. 1 Gas Installation Code.
2. This furnace must be installed so there are provisions for combustion and ventilation air. See manufacturer's installation information provided with this appliance.

OPERATION

This furnace is equipped with manual reset limit switch(es) in burner compartment to protect against overheat conditions that can result from inadequate combustion air supply or blocked vent conditions.

1. Do not bypass limit switches.
2. If a limit opens, call a quallified serviceman to correct the condition and reset limit switch.

INSTALLATION

MINIMUM INCHES CLEARANCE TO COMBUSTIBLE CONSTRUCTION

This furnace is approved for UPFLOW, DOWNFLOW, and HORIZONTAL installations.

This forced air furnace is equipped for use with natural gas at altitudes 0 - 10,000 ft (0 - 3,050m).

An accessory kit, supplied by the manufacturer, shall be used to convert to propane gas use or may be required for some natural gas applications.

This furnace is for indoor installation in a building constructed on site.

This furnace may be installed on combustible flooring in alcove or closet at minimum clearance as indicated by the diagram from combustible material.

This furnace may be used with a Type B-1 Vent and may be vented in common with other gas fired appliances.

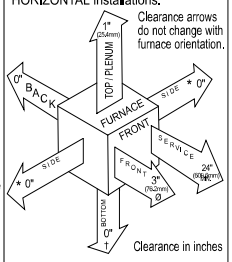

Vent Clearance to combustibles:
For Single Wall vents 6 inches (6 po).
For Type B-1 vent type 1 inch (1 po).

MINIMUM INCHES CLEARANCE TO COMBUSTIBLE CONSTRUCTION

DOWNFLOW POSITIONS:

† Installation on non-combustible floors only. For installation on combustible flooring only when installed on a manufacturer approved special base kit or manufacturer recommended coil assembly.

Ø 18 inches front clearance required for alcove.

* Indicates supply or return sides when furnace is in the horizontal position. Line contact only permissible between lines formed by intersections of the Top and two Sides of the furnace jacket, and building joists, studs or framing.

336996-101 REV.F

A220231

SPECIFICATIONS

UNIT SIZE		0451412	0451714	0701412	0701712	0701716	0702116	0901714
HEATING AND CAPACITY AND EFFICIENCY								
Input BTUh*	All Standard Low NOx - Upflow	44,000	44,000	66,000	66,000	66,000	66,000	88,000
	Low NOx - Dwnflw/Hz	42,000	42,000	63,000	63,000	63,000	63,000	84,000
Output Capacity (BTUh)†	All Standard Low NOx - Upflow	36,000	35,000	54,000	54,000	54,000	53,000	71,000
	Low NOx - Dwnflw/Hz	34,000	34,000	51,000	51,000	51,000	51,000	68,000
Certified Temperature Rise Range - °F (°C)		30-60 (17-33)	30-60 (17-33)	30-60 (17-33)	30-60 (17-33)	25-55 (14-31)	25-55 (14-31)	40-70 (22-39)
AFUE†		80%						
AIRFLOW CAPACITY AND BLOWER DATA								
Rated Certified External Static Pressure	Heating	0.10	0.10	0.12	0.12	0.12	0.12	0.15
	Cooling	0.50	0.50	0.50	0.50	0.50	0.50	0.50
Airflow CFM @ Rated ESP (CFM)‡	Heating	715	720	1075	1110	1310	1290	1230
	Cooling	175-1095	210-1285	180-1115	155-1160	235-1700	210-1820	330-1490
Direct Drive Motor HP		1/3	1/2	1/3	1/3	3/4	3/4	1/2
Motor Full Load Amps		4.4	6.7	4.4	4.4	8.8	8.8	6.7
Heating Blower Control (Htg OFF-Delay)		Adjustable: 90, 120 (factory-set), 150, 180 seconds						
Cooling Blower Control (Clg OFF-Delay)		Adjustable: 90 (factory-set), 5, 30 seconds						
Blower Wheel Diameter x Width - In. (mm)		10x6 (254x152)	10x8 (254x203)	10x6 (254x152)	10x8 (254x203)	11x8 (279x203)	10x10 (254x254)	10x8 (254x203)
Air Filtration System		Field Supplied Filter						
Filter used for Certified Watt Data		325531-40**						
ELECTRICAL DATA								
Unit Volts-Hertz-Phase		115-60-1						
Operating Voltage Range	Min-Max	104-127						
Maximum Unit Amps		6.0	7.9	6.0	5.9	10.4	10.4	8.2
Unit Ampacity		8.3	10.7	8.3	8.2	13.8	13.8	11.0
Maximum Wire Length (Measure 1 way in Ft/M)		44/13.6	34/10.6	44/13.6	45/13.80	26/8.2	26/8.2	34/10.3
Minimum Wire Size	AWG	14	14	14	14	14	14	14
Max. Fuse/Ckt Bkr Size (Time-Delay Type Recommended)	Amps	15	15	15	15	15	15	15
Transformer Capacity (24 VAC output)		40VA						
External Control Power Available	Heating	12VA						
	Cooling	35VA						
GAS CONTROLS								
Burners		2	2	3	3	3	3	4
Gas Connection Size		1/2 in. NPT						
Gas Valve (Redundant)	Mfr	WhiteRodgers™						
Min. inlet pressure	(in.w.c.)	4.5 (Natural Gas)						
Max. inlet pressure	(in.w.c.)	13.6 (Natural Gas)						
Ignition Device		Silicon Nitride						
Factory installed orifice		Size 43						
CONNECTIONS								
Communication System		None						
Thermostat Connections		G, C, W, Y, R						
Accessory Connections		EAC-1 (115 VAC); HUM (24 VAC); 1-STG AC (via Y)						

*. Gas input ratings are certified for elevations to 2000 ft. (610 M). In USA, For elevations above 2000 ft (610 M), reduce ratings 4 percent for each 1000 ft (305 M) above sea level. Refer to National Fuel Gas Code NFPA 54/ANSI Z223.1 Table F.4 or furnace installation instructions.

†. Capacity in accordance with U.S. Government DOE test procedures.

‡. Airflow shown is for bottom only return-air supply for the as-shipped speed tap. For air delivery above 1800 CFM, see Air Delivery table for other options. A filter is required for each return-air supply. An airflow reduction of up to 7 percent may occur when using the factory-specified 4-5/16-in. (110 mm) wide, high efficiency media filter.

**. See Accessory List for part numbers available.

Manufacturer reserves the right to change, at any time, specifications and designs without notice and without obligations.

UNIT SIZE		0902116	0902120	0902420	1102120	1102420	1352420	1552420
HEATING AND CAPACITY AND EFFICIENCY								
Input BTUh*	All Standard Low NOx - Upflow	88,000	88,000	88,000	110,000	110,000	132,000	154,000
	Low NOx - Dwnflw/Hz	84,000	84,000	-	105,000	105,000	126,000	147,000
Output Capacity (BTUh)†	All Standard Low NOx - Upflow	72,000	71,000	72,000	90,000	90,000	107,000	125,000
	Low NOx - Dwnflw/Hz	68,000	68,000	-	85,000	85,000	102,000	119,000
Certified Temperature Rise Range - °F (°C)		35-65 (19-36)	25-55 (14-31)	30-60 (17-33)	30-60 (17-33)	30-60 (17-33)	40-70 (22-39)	45-75 (25-42)
AFUE†		80%						
AIRFLOW CAPACITY AND BLOWER DATA								
Rated Certified External Static Pressure	Heating	0.15	0.15	0.15	0.20	0.20	0.20	0.20
	Cooling	0.50	0.50	0.50	0.50	0.50	0.50	0.50
Airflow CFM @ Rated ESP (CFM)‡	Heating	1325	1645	1515	1840	1970	1805	1945
	Cooling	315-1565	325-2315	265-1980	420-2350	400-2005	290-1925	290-1985
Direct Drive Motor HP		1/2	1	3/4	1	3/4	3/4	3/4
Motor Full Load Amps		6.7	11.5	8.8	11.5	8.8	8.8	8.8
Heating Blower Control (Htg OFF-Delay)		Adjustable: 90, 120 (factory-set), 150, 180 seconds						
Cooling Blower Control (Clg OFF-Delay)		Adjustable: 90 (factory-set), 5, 30 seconds						
Blower Wheel Diameter x Width - In. (mm)		10x10 (254x254)	11x11 (279x279)	11x11 (279x279)	11x11 (279x279)	11x11 (279x279)	11x11 (279x279)	11x11 (279x279)
Air Filtration System		Field Supplied Filter						
Filter used for Certified Watt Data		325531-40**						
ELECTRICAL DATA								
Unit Volts-Hertz-Phase		115-60-1						
Operating Voltage Range	Min-Max	104-127						
Maximum Unit Amps		8.2	13.9	10.7	14.4	11.1	11.0	10.7
Unit Ampacity		11.0	18.1	14.1	18.6	14.6	14.4	14.1
Maximum Wire Length (Measure 1 way in Ft/M)		34/10.3	31/9.6	26/8.0	30/9.4	25/7.7	25/7.8	26/8.0
Minimum Wire Size	AWG	14	12	14	12	14	14	14
Max. Fuse/Ckt Bkr Size (Time-Delay Type Recommended)	Amps	15	20	15	20	15	15	15
Transformer Capacity (24 VAC output)		40VA						
External Control Power Available	Heating	12VA						
	Cooling	35VA						
GAS CONTROLS								
Burners		4	4	4	5	5	6	6
Gas Connection Size		1/2 in. NPT						
Gas Valve (Redundant)	Mfr	WhiteRodgers™						
Min. inlet pressure	(in.w.c.)	4.5 (Natural Gas)						
Max. inlet pressure	(in.w.c.)	13.6 (Natural Gas)						
Ignition Device		Silicon Nitride						
Factory installed orifice		Size 43						
CONNECTIONS								
Communication System		None						
Thermostat Connections		G, C, W, Y, R						
Accessory Connections		EAC-1 (115 VAC); HUM (24 VAC); 1-STG AC (via Y)						

*. Gas input ratings are certified for elevations to 2000 ft. (610 M). In USA, For elevations above 2000 ft (610 M), reduce ratings 4 percent for each 1000 ft (305 M) above sea level. Refer to National Fuel Gas Code NFPA 54/ANSI Z223.1 Table F.4 or furnace installation instructions.

†. Capacity in accordance with U.S. Government DOE test procedures.

‡. Airflow shown is for bottom only return-air supply for the as-shipped speed tap. For air delivery above 1800 CFM, see Air Delivery table for other options. A filter is required for each return-air supply. An airflow reduction of up to 7 percent may occur when using the factory-specified 4-5/16-in. (110 mm) wide, high efficiency media filter.

**. See Accessory List for part numbers available.

AIR DELIVERY (with filter)

Air Delivery - CFM (with filter)*

Unit Size	Airflow Setting	Default Setting	External Static Pressure (in. w.c.)									
			0.1	0.2	0.3	0.4	0.5	0.6	0.7	0.8	0.9	1
0451412	1	Constant Fan	455	385	320	250	175	--	--	--	--	--
	2		490	425	360	300	225	150	--	--	--	--
	3		535	480	415	360	305	230	160	--	--	--
	4		565	510	450	395	345	285	215	135	--	--
	5		605	555	500	445	390	345	285	215	145	--
	6		645	595	545	490	440	395	350	290	225	155
	7		695	645	600	550	500	455	410	370	310	255
	8	Heating	715	670	625	575	530	485	440	400	355	290
	9		770	730	685	640	595	555	510	470	430	390
	10		825	780	740	700	660	615	575	535	500	460
	11		870	830	795	755	720	680	640	600	560	525
	12		920	880	845	810	775	735	700	660	625	590
	13		965	930	895	855	825	790	755	720	685	650
	14		1005	970	935	905	875	840	805	770	740	705
	15		1055	1020	990	960	930	895	865	835	800	770
	16		1105	1070	1040	1010	980	950	925	895	860	830
	17		1125	1095	1065	1035	1005	975	950	920	890	860
	18	Cooling	1210	1180	1150	1120	1095	1065	1040	1010	980	945
0451714	1	Constant Fan	495	425	345	270	210	135	--	--	--	--
	2		540	475	400	330	270	205	135	--	--	--
	3		580	520	455	380	320	260	200	160	--	--
	4		635	575	520	450	385	330	275	215	155	--
	5		685	630	570	515	450	390	340	290	235	180
	6	Heating	720	665	615	560	505	445	395	345	295	245
	7		770	720	665	615	565	505	450	400	355	310
	8		830	785	735	690	640	590	535	485	440	395
	9		880	840	790	745	705	660	610	555	510	465
	10		945	905	860	815	775	735	690	645	595	550
	11		1005	965	920	880	840	800	760	725	680	630
	12		1060	1025	985	940	905	865	825	790	750	710
	13		1120	1085	1050	1010	970	935	900	865	830	795
	14		1170	1135	1100	1065	1030	995	960	925	890	855
	15		1235	1205	1170	1135	1100	1065	1035	1000	965	915
	16		1295	1265	1235	1200	1170	1135	1105	1075	1020	930
	17		1365	1335	1305	1270	1240	1210	1180	1125	1035	930
	18	Cooling	1460	1420	1375	1330	1285	1235	1190	1130	1035	930
0701412	1	Constant Fan	465	400	330	250	180	115	--	--	--	--
	2		500	440	370	295	225	165	115	-	--	--
	3		550	490	430	365	300	235	175	130	---	--
	4		595	540	485	425	355	295	240	185	135	--
	5		635	580	530	475	420	355	300	245	195	145
	6		675	625	575	525	470	410	355	300	250	205
	7		715	670	625	575	525	475	420	370	320	270
	8		760	720	675	630	585	535	490	435	390	340
	9		805	765	725	685	640	595	550	505	455	410
	10		855	820	780	740	700	660	615	575	530	485
	11		905	870	835	795	760	720	685	645	600	560
	12		950	915	880	845	810	775	740	700	665	625
	13		1005	970	940	905	870	840	805	770	735	700
	14		1055	1020	990	960	930	895	865	830	800	765
	15	Heating	1085	1055	1025	995	965	935	900	870	840	810
	16		1120	1090	1060	1030	1000	970	940	910	880	850
	17		1150	1120	1095	1065	1035	1005	975	945	920	890
	18	Cooling	1220	1195	1170	1140	1115	1090	1060	1035	1005	970

Manufacturer reserves the right to change, at any time, specifications and designs without notice and without obligations.

Air Delivery - CFM (with filter)* (Continued)

Unit Size	Airflow Setting	Default Setting	External Static Pressure (in. w.c.)									
			0.1	0.2	0.3	0.4	0.5	0.6	0.7	0.8	0.9	1
0701712	1	Constant Fan	475	385	300	220	155	-	--	--	--	--
	2		515	430	350	275	200	130	--	--	--	--
	3		565	490	410	340	270	205	140	--	--	--
	4		610	540	470	400	335	265	210	150	--	--
	5		655	590	525	455	395	330	270	215	155	--
	6		700	635	570	505	445	385	325	270	220	165
	7		740	685	620	560	500	445	390	335	280	235
	8		790	735	675	620	565	510	455	400	350	300
	9		835	785	730	675	620	570	515	465	415	365
	10		880	830	780	725	675	625	575	525	480	430
	11		935	890	840	790	740	690	645	595	550	505
	12		985	940	895	845	800	750	705	665	620	575
	13		1035	990	950	900	855	810	770	730	685	640
	14		1080	1040	995	950	910	865	825	785	745	705
	15	Heating	1120	1075	1035	995	950	910	870	830	790	750
	16		1175	1140	1100	1060	1020	980	940	905	865	830
	17		1225	1190	1155	1115	1080	1040	1000	965	930	895
	18	Cooling	1300	1265	1230	1190	1160	1120	1085	1050	1015	980
0701716	1	Constant Fan	545	465	385	310	235	155	--	--	--	--
	2		605	535	455	385	315	250	175	-	--	--
	3		665	595	530	460	395	330	270	205	--	--
	4		740	675	615	550	490	430	370	315	255	190
	5		810	750	690	635	570	515	460	405	355	305
	6		870	815	760	705	650	595	545	490	440	390
	7		955	900	850	795	745	695	645	595	545	495
	8		1025	975	925	880	835	785	735	685	645	595
	9		1095	1050	1005	955	915	870	820	770	730	685
	10		1175	1135	1090	1045	1005	960	920	875	830	790
	11		1220	1180	1135	1095	1055	1015	975	935	890	850
	12	Heating	1320	1285	1245	1205	1170	1130	1095	1055	1015	980
	13		1390	1355	1315	1280	1245	1210	1170	1135	1100	1065
	14		1475	1435	1405	1370	1335	1300	1265	1235	1200	1165
	15		1550	1520	1485	1450	1415	1385	1350	1320	1290	1260
	16		1630	1600	1570	1540	1510	1480	1450	1420	1390	1365
	17		1705	1675	1640	1615	1590	1560	1535	1505	1480	1455
	18	Cooling	1840	1810	1775	1735	1700	1660	1620	1580	1540	1500
0702116	1	Constant Fan	590	495	390	290	210	120	--	--	--	--
	2		665	580	485	390	300	225	145	-	--	--
	3		730	655	565	480	385	310	245	170	--	--
	4		820	750	675	595	520	435	360	300	235	165
	5		875	810	740	665	595	515	435	370	315	250
	6		950	885	830	760	695	625	550	480	410	360
	7		1045	985	930	875	810	750	685	620	555	490
	8		1140	1085	1030	980	925	865	810	750	695	635
	9		1200	1145	1095	1050	1000	945	885	835	780	730
	10	Heating	1300	1250	1195	1155	1110	1065	1015	960	910	865
	11		1370	1320	1275	1230	1190	1150	1105	1055	1005	960
	12		1455	1410	1365	1325	1285	1245	1205	1165	1115	1070
	13		1535	1490	1450	1415	1375	1340	1305	1265	1225	1185
	14		1615	1575	1535	1495	1460	1425	1390	1355	1320	1285
	15		1705	1670	1635	1600	1565	1535	1505	1470	1435	1400
	16		1775	1745	1710	1680	1650	1620	1590	1560	1530	1505
	17		1870	1840	1810	1780	1750	1725	1705	1670	1630	1530
	18	Cooling	2025	1975	1925	1875	1820	1770	1725	1680	1630	1535

Manufacturer reserves the right to change, at any time, specifications and designs without notice and without obligations.

Air Delivery - CFM (with filter)* (Continued)

Unit Size	Airflow Setting	Default Setting	External Static Pressure (in. w.c.)									
			0.1	0.2	0.3	0.4	0.5	0.6	0.7	0.8	0.9	1
0901714	1	Constant Fan	670	595	485	405	330	245	190	130	--	--
	2		705	635	535	450	380	305	235	180	125	--
	3		760	695	625	520	450	380	310	245	195	145
	4		810	750	685	585	515	450	385	320	260	210
	5		860	800	745	675	580	510	450	390	325	270
	6		910	855	800	740	650	580	515	460	400	345
	7		950	900	850	790	730	640	575	515	465	410
	8		1025	975	925	875	820	740	670	615	560	510
	9		1075	1030	985	935	885	835	745	690	630	580
	10		1140	1095	1050	1005	960	910	855	775	715	665
	11		1210	1165	1125	1085	1040	995	950	895	815	760
	12	Heating	1255	1210	1170	1130	1085	1045	1000	955	880	820
	13		1280	1235	1200	1160	1115	1075	1030	990	925	855
	14		1340	1300	1265	1225	1185	1145	1105	1065	1025	965
	15		1410	1370	1335	1300	1265	1225	1190	1150	1110	1070
	16		1475	1440	1405	1370	1335	1300	1265	1225	1190	1150
	17		1550	1515	1480	1445	1415	1380	1345	1310	1270	1235
	18	Cooling	1620	1585	1555	1520	1490	1460	1425	1375	1315	1255
0902116	1	Constant Fan	685	585	490	395	315	240	170	--	--	--
	2		745	660	560	480	390	320	250	185	--	--
	3		810	725	635	550	475	395	325	265	200	--
	4		860	785	700	615	540	465	395	335	275	215
	5		915	845	765	680	610	535	465	400	345	285
	6		980	910	840	765	690	620	555	490	425	370
	7		1040	980	910	840	770	700	635	575	510	450
	8		1100	1040	975	910	840	770	710	650	590	530
	9		1170	1110	1055	995	930	870	800	745	685	630
	10		1225	1170	1110	1055	995	930	865	810	755	700
	11		1295	1245	1195	1135	1085	1025	970	905	850	795
	12		1315	1265	1215	1160	1110	1055	1000	935	880	830
	13	Heating	1350	1300	1250	1195	1145	1090	1035	975	915	865
	14		1420	1375	1330	1280	1230	1185	1130	1075	1020	960
	15		1495	1455	1405	1360	1315	1270	1220	1170	1120	1060
	16		1565	1525	1480	1435	1395	1350	1305	1260	1210	1160
	17		1645	1605	1565	1525	1480	1435	1390	1345	1300	1250
	18	Cooling	1725	1680	1645	1605	1565	1520	1480	1420	1340	1260
0902120	1	Constant Fan	770	655	540	430	325	195	--	--	--	--
	2		850	745	640	535	435	340	210	-	--	--
	3		925	825	725	625	530	435	345	230	--	--
	4		1030	940	845	755	665	575	490	405	315	185
	5		1120	1040	950	865	780	700	615	540	455	380
	6		1210	1130	1050	970	895	810	735	655	580	510
	7		1285	1215	1140	1065	990	915	840	765	690	620
	8		1385	1320	1250	1180	1110	1040	975	900	835	765
	9		1480	1415	1355	1290	1215	1155	1090	1025	960	895
	10		1570	1510	1450	1390	1325	1260	1200	1140	1080	1015
	11	Heating	1675	1615	1560	1505	1450	1390	1330	1270	1210	1155
	12		1775	1720	1670	1615	1560	1510	1450	1395	1340	1285
	13		1865	1815	1765	1715	1660	1610	1555	1500	1450	1395
	14		1965	1920	1875	1825	1780	1730	1680	1630	1580	1535
	15		2075	2030	1985	1940	1895	1845	1805	1760	1710	1660
	16		2170	2135	2090	2050	2005	1965	1925	1880	1835	1790
	17	Cooling	2270	2225	2190	2150	2115	2075	2035	2000	1960	1920
	18		2485	2445	2410	2365	2315	2265	2215	2160	2105	2050

Manufacturer reserves the right to change, at any time, specifications and designs without notice and without obligations.

Air Delivery - CFM (with filter)* (Continued)

Unit Size	Airflow Setting	Default Setting	External Static Pressure (in. w.c.)									
			0.1	0.2	0.3	0.4	0.5	0.6	0.7	0.8	0.9	1
0902420	1	Constant Fan	735	610	485	375	265	135	--	--	--	--
	2		830	720	610	495	395	295	175	--	--	--
	3		890	790	680	570	470	380	280	160	--	--
	4		975	880	775	675	575	485	405	310	195	--
	5		1050	960	865	770	680	585	500	425	340	235
	6		1120	1035	950	860	770	685	595	515	445	360
	7		1210	1130	1050	965	880	800	715	635	565	495
	8		1295	1220	1140	1065	985	905	830	755	670	605
	9		1395	1320	1250	1180	1100	1030	955	885	810	735
	10		1460	1390	1325	1255	1190	1115	1045	975	905	840
	11	Heating	1550	1485	1420	1355	1295	1225	1155	1090	1020	960
	12		1615	1550	1490	1430	1370	1305	1240	1175	1110	1045
	13		1710	1650	1595	1535	1475	1420	1355	1295	1235	1175
	14		1785	1730	1675	1615	1560	1510	1450	1390	1330	1275
	15		1890	1835	1780	1725	1675	1620	1570	1520	1460	1410
	16		1970	1920	1865	1815	1765	1715	1670	1620	1570	1520
	17		2050	2000	1950	1905	1855	1810	1760	1720	1675	1625
	18	Cooling	2170	2120	2070	2025	1980	1930	1880	1820	1765	1695
1102120	1	Constant Fan	845	730	625	520	420	330	240	135	--	--
	2		920	810	705	610	515	425	345	260	155	--
	3		1025	920	825	735	645	560	475	400	320	245
	4		1115	1015	930	840	760	675	595	520	445	380
	5		1235	1150	1060	980	900	825	750	675	600	525
	6		1340	1260	1180	1100	1025	955	885	810	740	675
	7		1440	1365	1290	1215	1140	1070	1005	940	875	805
	8		1530	1460	1390	1320	1250	1185	1115	1055	995	930
	9		1640	1575	1510	1440	1375	1310	1250	1190	1130	1075
	10		1745	1685	1620	1555	1495	1430	1370	1315	1260	1205
	11		1835	1780	1720	1665	1605	1550	1490	1435	1380	1330
	12	Heating	1895	1840	1785	1730	1675	1615	1560	1505	1455	1400
	13		1950	1895	1840	1785	1725	1670	1615	1565	1510	1460
	14		2055	2005	1955	1900	1845	1790	1740	1690	1640	1590
	15		2160	2110	2065	2015	1960	1910	1860	1815	1765	1720
	16	Cooling	2260	2210	2165	2120	2070	2020	1975	1930	1885	1840
	17		2355	2310	2265	2225	2180	2135	2090	2045	2005	1960
	18		2520	2480	2435	2395	2350	2310	2255	2195	2135	2080
1102420	1	Constant Fan	840	725	615	505	400	310	215	135	--	--
	2		930	825	720	620	520	420	335	250	165	--
	3		1015	915	815	725	630	530	440	360	280	205
	4		1095	995	905	815	725	635	540	460	385	310
	5		1185	1090	1005	915	835	750	665	580	500	430
	6		1250	1160	1080	1000	915	840	755	675	595	525
	7		1335	1255	1175	1100	1020	940	870	790	710	635
	8		1435	1355	1280	1210	1140	1060	990	920	845	780
	9		1510	1435	1360	1290	1225	1155	1085	1015	950	880
	10		1600	1530	1455	1390	1325	1260	1190	1125	1060	995
	11		1685	1615	1545	1480	1420	1360	1295	1230	1165	1110
	12		1760	1695	1630	1565	1505	1450	1390	1330	1270	1210
	13		1855	1795	1730	1670	1610	1560	1505	1445	1385	1330
	14		1945	1885	1830	1770	1710	1655	1605	1555	1495	1445
	15	Heating	2025	1970	1915	1855	1800	1750	1700	1650	1600	1550
	16		2055	2000	1945	1890	1835	1785	1735	1685	1635	1585
	17		2125	2070	2015	1965	1910	1860	1815	1765	1720	1670
	18	Cooling	2220	2170	2115	2060	2005	1960	1905	1860	1810	1750

Manufacturer reserves the right to change, at any time, specifications and designs without notice and without obligations.

Air Delivery - CFM (with filter)* (Continued)

Unit Size	Airflow Setting	Default Setting	External Static Pressure (in. w.c.)									
			0.1	0.2	0.3	0.4	0.5	0.6	0.7	0.8	0.9	1
1352420	1	Constant Fan	760	635	520	405	290	175	--	--	--	--
	2		815	700	590	485	370	270	155	--	--	--
	3		905	795	685	590	490	380	290	185	--	--
	4		975	870	770	680	590	490	395	310	205	--
	5		1025	920	825	740	655	560	460	375	290	195
	6		1120	1025	935	845	770	690	600	505	420	350
	7		1205	1120	1030	945	870	800	720	635	550	470
	8		1285	1200	1120	1040	965	900	830	750	675	590
	9		1380	1305	1225	1150	1075	1010	950	885	815	735
	10		1450	1380	1305	1230	1160	1095	1030	975	910	840
	11		1555	1480	1415	1345	1275	1210	1150	1095	1045	985
	12		1635	1565	1500	1435	1370	1310	1245	1190	1140	1090
	13		1710	1645	1585	1525	1460	1400	1340	1285	1230	1185
	14		1785	1725	1665	1600	1545	1485	1425	1375	1320	1275
	15	Heating	1870	1805	1750	1695	1640	1580	1525	1475	1420	1375
	16		1940	1885	1830	1780	1725	1675	1620	1570	1520	1475
	17		2020	1965	1915	1865	1815	1765	1715	1665	1620	1580
	18	Cooling	2125	2075	2025	1975	1925	1875	1825	1775	1705	1640
1552420	1	Constant Fan	765	645	520	395	290	185	--	--	--	--
	2		860	750	635	520	410	315	220	145	--	--
	3		915	810	705	600	485	385	300	210	135	--
	4		1000	895	795	695	595	490	400	320	230	145
	5		1075	975	880	790	695	595	500	420	335	260
	6		1170	1075	985	900	815	730	635	545	470	390
	7		1260	1170	1090	1010	930	845	765	675	590	510
	8		1340	1255	1180	1100	1025	950	870	795	710	625
	9		1415	1340	1260	1190	1120	1045	970	895	815	745
	10		1505	1430	1355	1290	1220	1150	1080	1010	945	870
	11		1575	1500	1430	1365	1295	1230	1165	1100	1030	970
	12		1660	1590	1520	1455	1395	1335	1275	1210	1140	1085
	13		1735	1670	1605	1545	1485	1425	1365	1310	1250	1185
	14		1825	1760	1700	1640	1585	1530	1475	1425	1365	1310
	15		1920	1860	1800	1740	1685	1630	1580	1530	1475	1420
	16	Heating	2000	1945	1890	1825	1775	1725	1675	1625	1575	1525
	17		2085	2035	1980	1925	1870	1825	1780	1740	1695	1650
	18	Cooling	2205	2150	2095	2040	1985	1935	1885	1835	1775	1720

NOTE:

1. A filter is required for each return-air inlet. Airflow performance included 3/4-in. (19 mm) washable filter media such as contained in a factory - authorized accessory filter rack. See accessory list. To determine airflow performance without this filter, assume an additional 0.1 in. w.c. available external static pressure.
2. **Adjust the blower airflow setting as necessary for the proper air temperature rise for each installation.**
3. Airflows over 1800 CFM require bottom return, two-side return, or bottom and side return. A minimum filter size of 20" x 25" (508 x 635 mm) is required.
4. For upflow applications, air entering from one side into both the side of the furnace and a return air base counts as a side and bottom return.
5. The -- entry indicates unstable operating conditions.

Airflow Settings

	Default Airflow Settings*		Designated Airflow Settings	
Unit Size	Heating	Cooling	Heating	Constant Fan
0451412	8	18	(4-12)	(1-7)
0451714	6	18	(4-12)	(1-7)
0701412	15	18	(9-16)	(1-7)
0701712	15	18	(11-17)	(1-8)
0701716	12	18	(7-13)	(1-4)
0702116	10	18	(6-14)	(1-8)
0901714	12	18	(7-16)	(1-9)
0902116	13	18	(8-16)	(1-6)
0902120	11	17	(7-14)	(1-9)
0902420	11	18	(7-16)	(1-10)
1102120	12	16	(8-15)	(1-9)
1102420	15	18	(9-17)	(1-6)
1352420	15	18	(12-16)	(1-7)
1552420	16	18	(13-17)	(1-2)

*. Setting #1 is the default setting for Constant Fan

TYPICAL WIRING SCHEMATIC

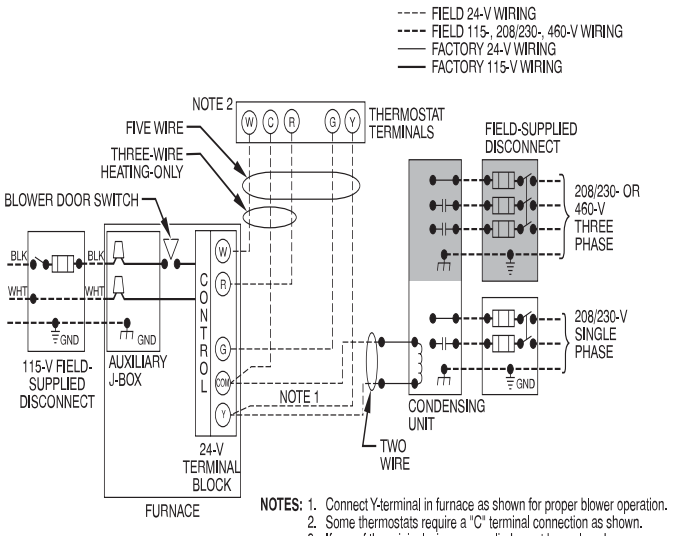

A190079

FURNACE CONTROL BOARD

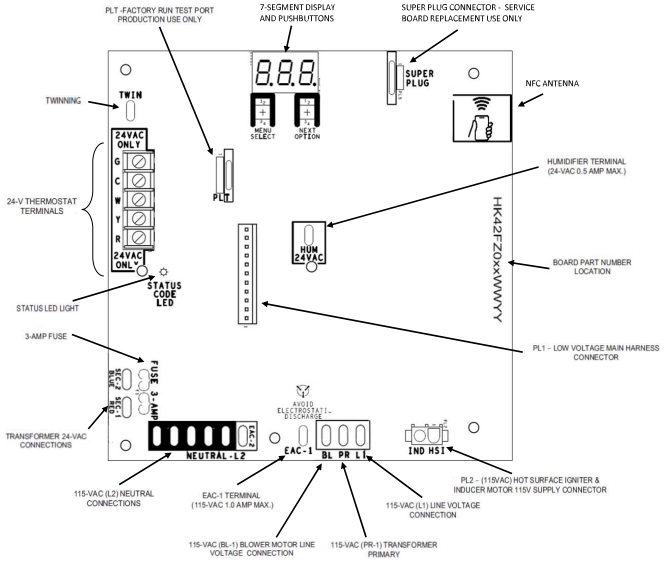

A210192

VENTING CONFIGURATIONS

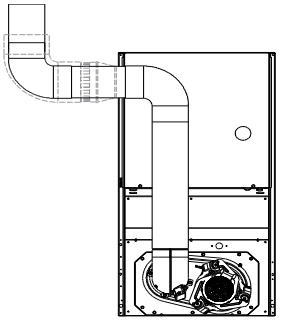

SEE NOTES:1,2,3,4,5,7,8,9 on the page following these figures

A03210

Downflow Application-Vent Elbow Up then Left

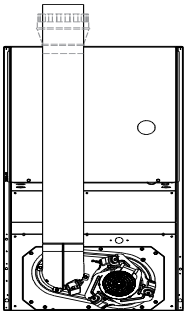

SEE NOTES: 1,2,4,5,7,8,9 on the page following these figures

A03211

Downflow Application-Vent Elbow Up

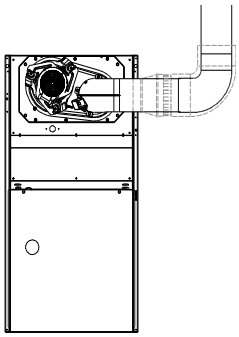

SEE NOTES: 1,2,3,4,7,8,9 on the pages following these figures

A03209

Upflow Application-Vent Elbow Right

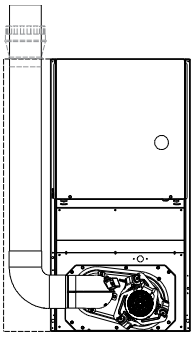

SEE NOTES: 1,2,4,5,6,7,8,9 on the page following these figures

A03207

Downflow Application-Vent Elbow Left then Up

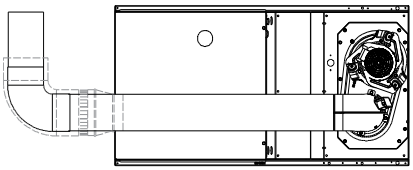

SEE NOTES: 1,2,4,5,7,8,9

A02068

Horizontal Right Application-Vent Elbow Left

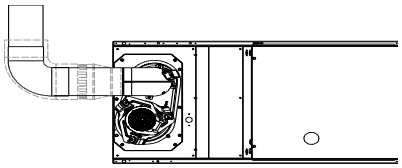

SEE NOTES: 1,2,4,7,8,9 on the page following these figures

A03213

Horizontal Left Application-Vent Elbow Left

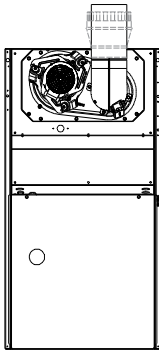

SEE NOTES: 1,2,4,7,8,9 on the page following these figures

A03208

Upflow Application-Vent Elbow Up

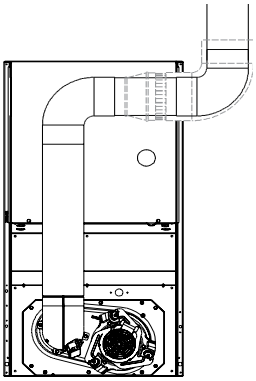

SEE NOTES:1,2,3,4,5,7,8,9 on the page following these figures.

A03212

Downflow Application-Vent Elbow Up then Right

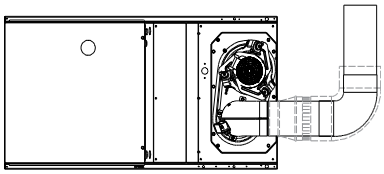

SEE NOTES: 1,2,4,7,8,9 on the page following these figures

A03218

Horizontal Right Application-Vent Elbow Right

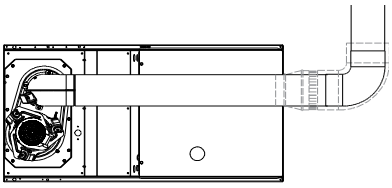

SEE NOTES: 1,2,4,5,7,8,9 on the page following these figures

A03216

Horizontal Left Application-Vent Elbow Right

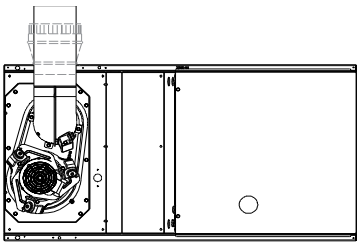

SEE NOTES: 1,2,4,5,7,8,9 on the page following these figures

A03215

Horizontal Left Application-Vent Elbow Up

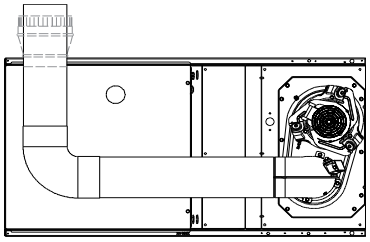

SEE NOTES: 1,2,4,5,7,8,9 on the page following these figures

A03219

Horizontal Right Application-Vent Elbow Left then Up

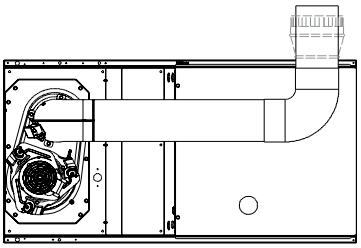

SEE NOTES: 1,2,4,5,7,8,9 on the page following these figures

A03214

Horizontal Left Application-Vent Elbow Right then Up

Venting notes:

1. For common vent, vent connector sizing and vent material: United States, latest edition of the National Fuel Gas Code (NFGC), ANSI Z223.1/NFPA 54.
2. Immediately increase to 5-in. (127 mm) vent connector outside furnace casing when 5-in. (127 mm) vent connector required, refer to Note 1.
3. Side outlet vent for upflow and downflow installations must use Type B vent immediately after exiting the furnace, except when Downflow Vent Guard is used in downflow position.
4. Type B vent where required, refer to Note 1.
5. 4-in. (102 mm) single wall vent must be used inside furnace casing and the Downflow Vent Guard Kit.
6. Accessory Downflow Vent Guard Kit required in downflow installations with bottom vent configuration.
7. Chimney Adapter Kit required for exterior masonry chimney applications. Refer to Chimney Adapter Kits for sizing and complete application details.
8. Secure vent connector to furnace elbow with (2) corrosion-resistant sheet metal screws, space approximately 180 apart.
9. Secure all other single wall vent connector joints with (3) corrosion-resistant screws spaced approximately 120 apart. Secure Type B vent connectors per vent connector manufacturer's recommendations.

ACCESSORIES

PART NO.	DESCRIPTION	0451412	0451714	0701412	0701712	0701716	0702116	0901714
ACG1425NCB*	External Filter Rack, 14-1/2 x 25”	X	-	X	-	-	-	-
ACG1625NCF*	External Filter Rack, 16 x 25”	-	X	-	X	X	-	X
ACG2025NCJ*	External Filter Rack, 20 x 25”	-	-	-	-	-	X	-
325531-402*	Washable filter, 3/4” x 16” x 25”	X	X	X	X	X	-	X
325531-403*	Washable filter, 3/4” x 21” x 25”	-	-	-	-	-	X	-
NAHB00101CA	Coil Adapter Kits - No Offset	X	X	X	X	X	X	X
NAHB00201CA	Coil Adapter Kits - Single Offset	X	X	X	X	X	X	X
NAHB00301CA	Coil Adapter Kits - Double Offset	X	X	X	X	X	X	X
NAHA01401RA	Return Air Base (Upflow Applications) 14-3/16” wide	X	-	X	-	-	-	-
NAHA01701RA	Return Air Base (Upflow Applications) 17-1/2” wide	-	X	-	X	X	-	X
NAHA02101RA	Return Air Base (Upflow Applications) 21” wide	-	-	-	-	-	X	-
NAHA00401DH	Chimney Adapter Kit, up to or equal to 110K BTUh	X	X	X	X	X	X	X
NAHA01101SB	Combustible Floor Base (Not required when evaporator coil case is used for downflow)	X	X	X	X	X	X	X
NAHB00301VC	Downflow Vent Guard (Not required when vent is routed through cabinet)	X	X	X	X	X	X	X
AGAGC8NPS01B*	Natural-to-Propane Conversion Kit†	X	X	X	X	X	X	X
AGAGC8PNS01B*	Propane-to-Natural Conversion Kit†	X	X	X	X	X	X	X
AGATWNPUA01A	Twinning Kit	-	-	-	-	-	X	-

*. Purchased through FAST Parts.
†. Factory-authorized and field installed. Fuel conversion kits are CSA recognized.
X = Accessory

PART NO.	DESCRIPTION	0902116	0902120	0902420	1102120	1102420	1352420	1552420
ACG2025NCJ*	External Filter Rack 20 x 25”	X	X	-	X	-	-	-
ACG2424NCL*	External Filter Rack 24-1/2 x 24”	-	-	X	-	X	X	X
325531-403*	Washable filter 3/4” x 21” x 25”	X	X	-	X	-	-	-
325531-404*	Washable filter 3/4” x 24” x 25”	-	-	X	-	X	X	X
NAHB00101CA	Coil Adapter Kits - No Offset	X	X	X	X	X	X	X
NAHB00201CA	Coil Adapter Kits - Single Offset	X	X	X	X	X	X	X
NAHB00301CA	Coil Adapter Kits - Double Offset	X	X	X	X	X	X	X
NAHA02101RA	Return Air Base (Upflow Applications) 21” wide	X	X	-	X	-	-	-
NAHA02401RA	Return Air Base (Upflow Applications) 24-1/2 wide	-	-	X	-	X	X	X
NAHA00401DH	Chimney Adapter Kit, up to or equal to 110K BTUh	X	X	X	X	X	-	-
NAHA00301DH	Chimney Adapter Kit, up to or equal to 135K BTUh	-	-	-	-	-	X	X
NAHA01101SB	Combustible Floor Base (Not required when evaporator coil case is used for down-flow)	X	X	X	X	X	X	X
NAHB00301VC	Downflow Vent Guard (Not required when vent is routed through cabinet)	X	X	X	X	X	X	X
AGAGC8NPS01B*	Natural-to-Propane Conversion Kit†	X	X	X	X	X	X	X
AGAGC8PNS01B*	Propane-to-Natural Conversion Kit†	X	X	X	X	X	X	X
AGATWNPUA01A	Twinning Kit	X	X	X	X	X	X	X

*. Purchased through FAST Parts.
†. Factory-authorized and field installed. Fuel conversion kits are CSA recognized.
X = Accessory

ORIFICES

Part Number	Gas Type	Orifice Size
1185612	Natural	42
1176928	Natural	43
1185574	Natural	44
1177213	Natural	45

Part Number	Gas Type	Orifice Size
1183809	Natural	46
1185613	Natural	47
1185614	Natural	48

Part Number	Gas Type	Orifice Size
1184256	Propane	54
1185615	Propane	55
1185616	Propane	56
1185617	Propane	1.25 mm
1185618	Propane	1.30 mm

© 2025 Carrier. All rights reserved.

Manufacturer reserves the right to change, at any time, specifications and designs without notice and without obligations.