INSTALLATION INSTRUCTIONS
80% Single Stage, PSC Motor
Category I, Gas Furnace
N8MSN, N8MSL

These instructions must be read and understood completely before attempting installation.

Safety Labeling and Signal Words

DANGER, WARNING, CAUTION, and NOTE

The signal words **DANGER, WARNING**, **CAUTION**, and **NOTE** are used to identify levels of hazard seriousness. The signal word **DANGER** is only used on product labels to signify an immediate hazard. The signal words **WARNING**, **CAUTION**, and **NOTE** will be used on product labels and throughout this manual and other manual that may apply to the product.

DANGER – Immediate hazards which will result in severe personal injury or death.

WARNING – Hazards or unsafe practices which could result in severe personal injury or death.

CAUTION – Hazards or unsafe practices which may result in minor personal injury or product or property damage.

NOTE – Used to highlight suggestions which will result in enhanced installation, reliability, or operation.

Signal Words in Manuals

The signal word **WARNING** is used throughout this manual in the following manner:

⚠ WARNING

The signal word **CAUTION** is used throughout this manual in the following manner:

⚠ CAUTION

Signal Words on Product Labeling

Signal words are used in combination with colors and/or pictures or product labels.

⚠ Safety–alert symbol

When you see this symbol on the unit and in instructions or manuals, be alert to the potential for personal injury.

TABLE OF CONTENTS

DIMENSIONS . . . 3
SAFETY CONSIDERATIONS . . . 3
INTRODUCTION . . . 4
CODES AND STANDARDS . . . 5
SAFETY . . . 5
GENERAL INSTALLATION . . . 5
COMBUSTION AND VENTILATION AIR . . . 5
DUCT SYSTEMS . . . 5
ACOUSTICAL LINING AND FIBROUS GLASS DUCT . . . 5
GAS PIPING AND GAS PIPE PRESSURE TESTING . . . 5
ELECTRICAL CONNECTIONS . . . 5
VENTING . . . 5
ELECTROSTATIC DISCHARGE PRECAUTIONS PROCEDURE . . . 5
LOCATION . . . 6
AIR FOR COMBUSTION AND VENTILATION . . . 7
INSTALLATION . . . 10
UPFLOW INSTALLATION . . . 10
DOWNFLOW INSTALLATION . . . 11
FILTER ARRANGEMENT . . . 12
AIR DUCTS . . . 13
AIR DELIVERY – CFM (WITH FILTER)* . . . 14
ELECTRICAL CONNECTIONS . . . 20
115–V WIRING . . . 20
J–BOX RELOCATION . . . 20
ELECTRICAL CONNECTION TO J–BOX . . . 20
ELECTRICAL DATA . . . 21
24–V WIRING . . . 22
ACCESSORIES . . . 23
VENTING . . . 23
GENERAL VENTING REQUIREMENTS . . . 23
MASONRY CHIMNEY REQUIREMENTS . . . 24
APPLIANCE APPLICATION REQUIREMENTS . . . 27
ADDITIONAL VENTING REQUIREMENTS . . . 27
SIDEWALL VENTING . . . 28
START–UP, ADJUSTMENT, AND SAFETY CHECK . . . 31
GENERAL . . . 31
START–UP PROCEDURES . . . 31
ADJUSTMENTS . . . 32
SPEED SELECTION . . . 33
CHECK SAFETY CONTROLS . . . 34
CHECKLIST . . . 35
ORIFICE SIZE AND MANIFOLD PRESSURE . . . 36
SERVICE AND MAINTENANCE PROCEDURES . . . 40
INTRODUCTION . . . 40
CARE AND MAINTENANCE . . . 40
SEQUENCE OF OPERATION . . . 44
WIRING DIAGRAM FOR MODELS . . . 45
TROUBLESHOOTING GUIDE . . . 46

Certified System ISO 9001 QMI-SAI Global

DESIGN CERTIFIED

AHRI CERTIFIED www.ahridirectory.org

Use of the AHRI Certified TM Mark indicates a manufacturer's participation in the program. For verification of certification for individual products, go to www.ahridirectory.org .

⚠ WARNING

PERSONAL INJURY, AND/OR PROPERTY DAMAGE HAZARD

Failure to carefully read and follow this warning could result in equipment malfunction, property damage, personal injury and/or death.

Installation or repairs made by unqualified persons could result in equipment malfunction, property damage, personal injury and/or death.

The information contained in this manual is intended for use by a qualified service technician familiar with safety procedures and equipped with proper tools and test instruments.

Installation must conform with local building codes and with the Natural Fuel Gas Code (NFCG) NFPA 54/ANSI Z223.1, and National standards of Canada CAN/CSA–B149.1 and .2 Natural Gas and Propane Installation Codes.

INSTALLER: Affix these instructions on or adjacent to the furnace.
CONSUMER: Retain these instructions for future reference.

Portions of the text and tables are reprinted from NFPA 54 /ANSI Z223.1–2012©, with permission of National Fire Protection Association, Quincy, MA 02269 and American Gas Association, Washington, DC 20001. This reprinted material is not the complete and official position of the NFPA or ANSI, on the referenced subject, which is represented only by the standard in its entirety.

Printed in U.S.A. 441 01 1402 05 12/5/2013

Figure 1 — Dimensional Drawing

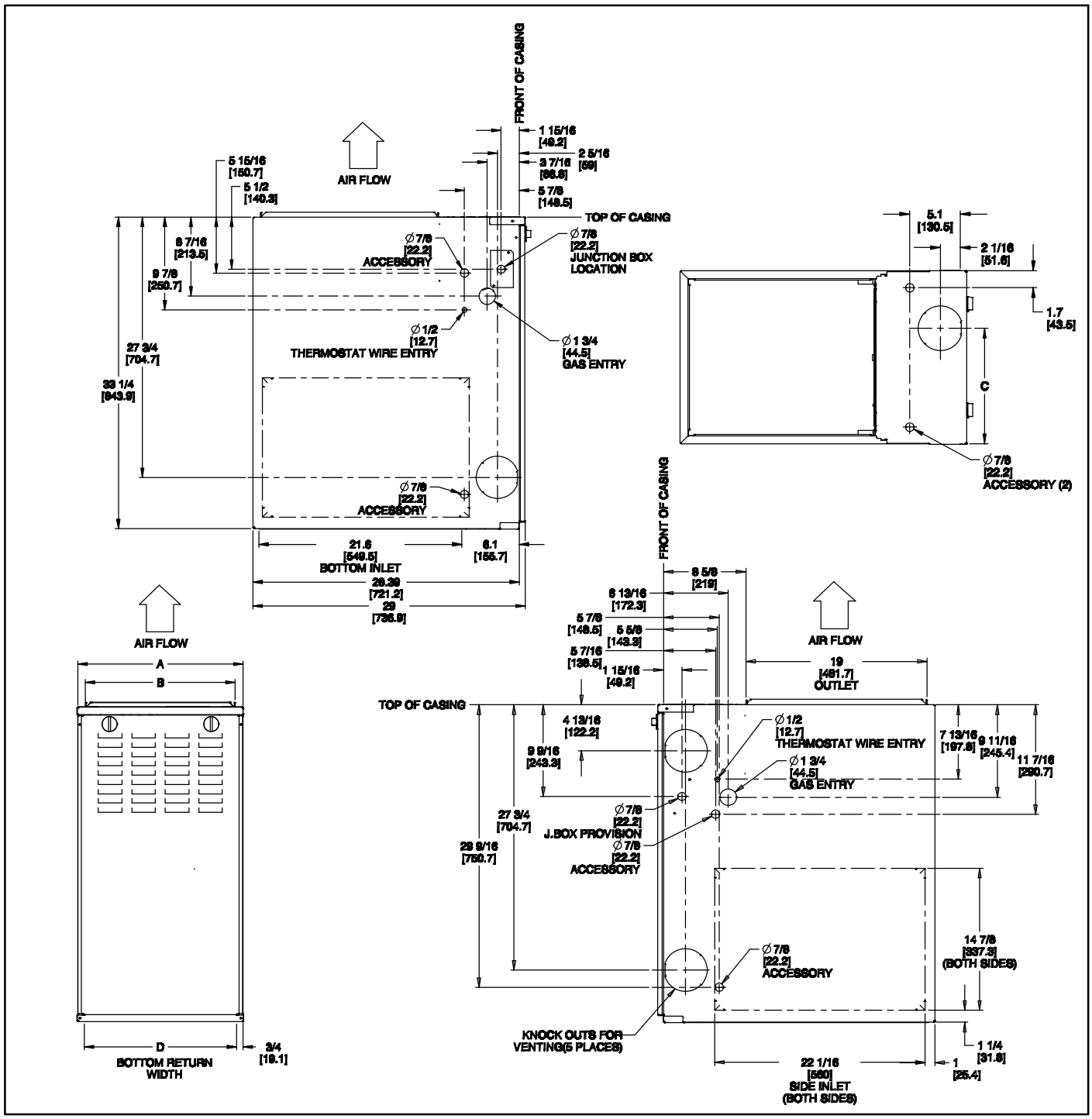

NOTES:

1. Two additional 7/8−in. (22 mm) diameter holes are located in the top plate.
2. Minimum return−air openings at furnace, based on metal duct. If flex duct is used, see flex duct manufacturer's recommendations for equivalent diameters.
   a. For 800 CFM−16−in. (406 mm) round or 14 1/2 x 12−in. (368 x 305 mm) rectangle.
   b. For 1200 CFM−20−in. (508 mm) round or 14 1/2 x 19 1/2−in. (368 x 495 mm) rectangle.
   c. For 1600 CFM−22−in. (559 mm) round or 14 1/2 x 22 1/16−in. (368 x 560mm) rectangle.
   d. For airflow requirements above 1800 CFM, see Air Delivery table in Product Data literature for specific use of single side inlets. The use of both side inlets, a combination of 1 side and the bottom, or the bottom only will ensure adequate return air openings for airflow requirements above 1800 CFM.

Table 1—Dimensions – In. (mm)

FURNACE SIZE N8MSN & N8MSL	A CABINET WIDTH IN (mm)	B OUTLET WIDTH IN (mm)	C TOP AND BOTTOM FLUE COLLAR IN (mm)	D BOTTOM WIDTH IN (mm)	VENT CONNECTION SIZE* IN (mm)	SHIP WT LB (KG)
0451408	14–3/16 (360)	12–9/16 (319)	9–5/16 (237)	12–11/16 (322)	4 (102)	104 (47)
0451412	14–3/16 (360)	12–9/16 (319)	9–5/16 (237)	12–11/16 (322)	4 (102)	107 (49)
0701408	14–3/16 (360)	12–9/16 (319)	9–5/16 (237)	12–11/16 (322)	4 (102)	111 (50)
0701412	14–3/16 (360)	12–9/16 (319)	9–5/16 (237)	12–11/16 (322)	4 (102)	115 (52)
0701716	17–1/2 (445)	15–7/8 (403)	11–9/16 (294)	16 (406)	4 (102)	126 (57)
0901714	17–1/2 (445)	15–7/8 (403)	11–9/16 (294)	16 (406)	4 (102)	127 (58)
0902116	21 (533)	19–3/8 (492)	13–5/16 (338)	19–1/2 (495)	4 (102)	140 (64)
0902120	21 (533)	19–3/8 (492)	13–5/16 (338)	19–1/2 (495)	4 (102)	146 (66)
1101712	17–1/2 (445)	15–7/8 (403)	11–9/16 (294)	16 (406)	4 (102)	135 (61)
1102116	21 (533)	19–3/8 (492)	13–5/16 (338)	19–1/2 (495)	4 (102)	146 (66)
1102122	21 (533)	19–3/8 (492)	13–5/16 (338)	19–1/2 (495)	4 (102)	152 (69)
1352116	21 (533)	19–3/8 (492)	13–5/16 (338)	19–1/2 (495)	4 (102)*	149 (68)
1352422	24–1/2 (622)	22–7/8 (581)	15–1/16 (383)	23 (584)	4 (102)*	163 (74)
1552420	24–1/2 (622)	22–7/8 (581)	15–1/16 (383)	23 (584)	4 (102)*	170 (77)

*135 and 155 size furnaces require a 5 or 6–in. (127 or 152 mm) vent. Use a vent adapter between furnace and vent stack. See Installation Instructions for complete installation requirements.

SAFETY CONSIDERATIONS

⚠ WARNING

FIRE, EXPLOSION, ELECTRICAL SHOCK, AND CARBON MONOXIDE POISONING HAZARD

Failure to follow this warning could result in personal injury, death, or property damage.

Improper installation, adjustment, alteration, service, maintenance, or use can cause carbon monoxide poisoning, explosion, fire, electrical shock, or other conditions which may cause personal injury or property damage. Consult a qualified service agency, local gas supplier, or your distributor or branch for information or assistance. The qualified service agency must use only factory–authorized and listed kits or accessories when modifying this product.

⚠ CAUTION

FURNACE RELIABILITY HAZARD

Failure to follow this caution may result in unit component damage.

Application of this furnace should be indoors with special attention given to vent sizing and material, gas input rate, air temperature rise, unit leveling, and unit sizing.

⚠ CAUTION

CUT HAZARD

Failure to follow this caution may result in personal injury.

Sheet metal parts may have sharp edges or burrs. Use care and wear appropriate protective clothing, safety glasses and gloves when handling parts, and servicing furnaces.

Improper installation, adjustment, alteration, service, maintenance, or use can cause explosion, fire, electrical shock, or other conditions which may cause death, personal injury, or property damage. Consult a qualified installer, service agency, or your distributor or branch for information or assistance. The qualified installer or agency must use factory–authorized kits or accessories when modifying this product. Refer to the individual instructions packaged with the kits or accessories when installing.

Follow all safety codes. Wear safety glasses, protective clothing, and work gloves. Have a fire extinguisher available. Read these instructions thoroughly and follow all warnings or cautions include in literature and attached to the unit. Consult local building codes, the current editions of the National Fuel Gas Code (NFGC) NFPA 54/ANSI Z223.1 and the National Electrical Code (NEC) NFPA 70.

Recognize safety information. This is the safety–alert symbol ⚠. When you see this symbol on the unit and in instructions or manuals, be alert to the potential for personal injury.

Understand the signal words **DANGER**, **WARNING**, and **CAUTION**. These words are used with the safety–alert symbol. **DANGER** identifies the most serious hazards which **will** result in severe personal injury or death. **WARNING** signifies hazards which **could** result in personal injury or death. **CAUTION** is used to identify unsafe practices which **may** result in minor personal injury or product and property damage. **NOTE** is used to highlight suggestions which **will** result in enhanced installation, reliability, or operation.

1. Use only with type of gas approved for this furnace. Refer to the furnace rating plate.
2. Install this furnace only in a location and position as specified in the “Location” section of these instructions.
3. Provide adequate combustion and ventilation air to the furnace space as specified in “Air for Combustion and Ventilation” section.
4. Combustion products must be discharged outdoors. Connect this furnace to an approved vent system only, as specified in the “Venting” section of these instructions.
5. Never test for gas leaks with an open flame. Use a commercially available soap solution made specifically for the detection of leaks to check all connections, as specified in the “Gas Piping” section.
6. Always install furnace to operate within the furnace’s intended temperature–rise range with a duct system which has an external static pressure within the allow-

able range, as specified in the “Start–Up, Adjustments, and Safety Check” section. See furnace rating plate.

7. When a furnace is installed so that supply ducts carry air circulated by the furnace to areas outside the space containing the furnace, the return air shall also be handled by duct(s) sealed to the furnace casing and terminating outside the space containing the furnace. See “Air Ducts” section.
8. A gas–fired furnace for installation in a residential garage must be installed as specified in the warning box in the “Location” section.
9. The furnace may be used for construction heat provided that the furnace installation and operation complies with the first CAUTION in the LOCATION section of these instructions.
10. These Multipoise Gas–Fired Furnaces are CSA (formerly A.G.A. and C.G.A.) design–certified for use with natural and propane gases (see furnace rating plate) and for installation in alcoves, attics, basements, closets, utility rooms, crawlspaces, and garages. The furnace is factory–shipped for use with natural gas. A CSA (A.G.A. and C.G.A.) listed accessory gas conversion kit is required to convert furnace for use with propane gas.
11. See Figure 1 for required clearances to combustible construction.
12. Maintain a 1–in. (25 mm) clearance from combustible materials to supply air ductwork for a distance of 36 in. (914 mm) horizontally from the furnace. See NFPA 90B or local code for further requirements.
13. These furnaces SHALL NOT be installed directly on carpeting, tile, or any other combustible material other than wood flooring. In downflow installations, factory accessory floor base MUST be used when installed on combustible materials and wood flooring. Special base is not required when this furnace is installed on manufacturer’s coil model numbers END4X, ENW4X or when coil casing model number NAEA is used. See Figure 1 for clearance to combustible construction information.

INTRODUCTION

N8MSN & N8MSL 4–way multipoise Category I fan–assisted furnace is CSA design–certified. A Category I fan–assisted furnace is an appliance equipped with an integral mechanical means to either draw or force products of combustion through the combustion chamber and/or heat exchanger. The furnace is factory–shipped for use with natural gas. This furnace is not approved for installation in mobile homes, recreational vehicles, or outdoors.

This furnace is designed for minimum continuous return–air temperature of 60°F (16°C) db or intermittent operation down to 55°F (13°C) db such as when used with a night setback thermostat. Return–air temperature must not exceed 80°F (27°C) db. Failure to follow these return–air temperature limits may affect reliability of heat exchangers, motors, and controls. (See Figure 3)

Figure 2 — Clearances to Combustibles

WARNING

FIRE, EXPLOSION, ASPHYXIATION HAZARD

Improper adjustment, alteration, service, maintenance, or installation can cause serious injury or death.

Read and follow instructions and precautions in User's Information Manual provided with this furnace. Installation and service must be performed by a qualified service agency or the gas supplier.

CAUTION

Check entire gas assembly for leaks after lighting this appliance.

INSTALLATION

1. This furnace must be installed in accordance with the manufacturer's instructions and local codes. In the absence of local codes, follow the National Fuel Gas Code ANSI Z223.1 / NFPA54 or CSA B-149. 1 Gas Installation Code.
2. This furnace must be installed so there are provisions for combustion and ventilation air. See manufacturer's installation information provided with this appliance.

OPERATION

This furnace is equipped with manual reset limit switch(es) in burner compartment to protect against overheat conditions that can result from inadequate combustion air supply or blocked vent conditions.

1. Do not bypass limit switches.
2. If a limit opens, call a quallified serviceman to correct the condition and reset limit switch.

INSTALLATION

MINIMUM INCHES CLEARANCE TO COMBUSTIBLE CONSTRUCTION

This forced air furnace is equipped for use with natural gas at altitudes 0 - 10,000 ft (0 - 3,050m).

An accessory kit, supplied by the manufacturer, shall be used to convert to propane gas use or may be required for some natural gas applications.

This furnace is for indoor installation in a building constructed on site.

This furnace may be installed on combustible flooring in alcove or closet at minimum clearance as indicated by the diagram from combustible material.

This furnace may be used with a Type B-1 Vent and may be vented in common with other gas fired appliances.

This furnace is approved for UPFLOW, DOWNFLOW, and HORIZONTAL installations.

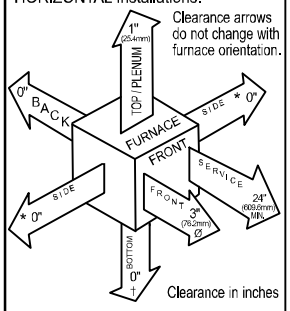

Vent Clearance to combustibles:
For Single Wall vents 6 inches (6 po).
For Type B-1 vent type 1 inch (1 po).

MINIMUM INCHES CLEARANCE TO COMBUSTIBLE CONSTRUCTION

DOWNFLOW POSITIONS:

† Installation on non-combustible floors only.
For Installation on combustible flooring only when installed on special base, Part No. KGASB0201ALL or NAHA01101SB, Coil Assembly, Part No. CAR, CAP, CNPV, CNRV, END4X, ENW4X, WENC, WTNC, WENW OR WTNW.

Ø 18 inches front clearance required for alcove.

* Indicates supply or return sides when furnace is in the horizontal position. Line contact only permissible between lines formed by intersections of the Top and two Sides of the furnace jacket, and building joists, studs or framing.

336996-101 REV. C

Figure 3 — Return Air Temperature

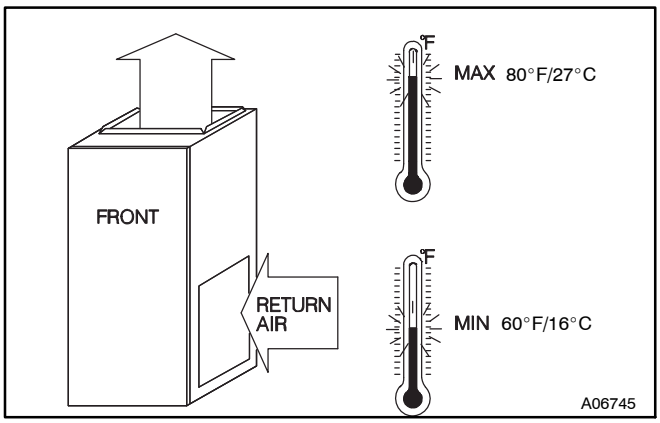

For accessory installation details, refer to the applicable instruction literature.

NOTE: Remove all shipping brackets and materials before operating the furnace.

CODES AND STANDARDS

Follow all national and local codes and standards in addition to these instructions. The installation must comply with regulations of the serving gas supplier, local building, heating, plumbing, and other codes. In absence of local codes, the installation must comply with the national codes listed below and all authorities having jurisdiction. In the United States , follow all codes and standards for the following:

Step 1 —Safety

National Fuel Gas Code (NFGC) NFPA 54–2012/ANSI Z223.1–2012 and the Installation Standards, Warm Air Heating and Air Conditioning Systems ANSI/NFPA 90B

Step 2 —General Installation

Current edition of the NFGC and the NFPA 90B. For copies, contact the National Fire Protection Association Inc., Batterymarch Park, Quincy, MA 02269; (www.NFPA.org) or for only the NFGC, contact the American Gas Association, 400 N. Capitol Street, N.W., Washington, DC 20001 (www.AGA.org).

Step 3 —Combustion and Ventilation Air

Section 9.3 of the NFGC, NFPA 54 / ANSI Z223.1–2012 Air for Combustion and Ventilation

Step 4 —Duct Systems

Air Conditioning Contractors Association (ACCA) Manual D, Sheet Metal and Air Conditioning Contractors National Association (SMACNA), or American Society of Heating, Refrigeration, and Air Conditioning Engineers (ASHRAE) 2001 Fundamentals Handbook Chapter 34 or 2000 HVAC Systems and Equipment Handbook Chapters 9 and 16.

Step 5 —Acoustical Lining and Fibrous Glass Duct

Current edition of SMACNA and NFPA 90B as tested by UL Standard 181 for Class I Rigid Air Ducts

Step 6 —Gas Piping and Gas Pipe Pressure Testing

NFGC; NFPA 54 / ANSI Z223.1–2012 chapters 5, 6, 7 and 8 and National Plumbing Codes

Step 7 —Electrical Connections

National Electrical Code (NEC) NFPA 70–2011

Step 8 —Venting

NFGC NFPA 54 / ANSI Z223.1–2012; chapters 12 and 13

ELECTROSTATIC DISCHARGE (ESD) PRECAUTIONS PROCEDURE

⚠ CAUTION

FURNACE RELIABILITY HAZARD

Failure to follow this caution may result in furnace component damage.

Electrostatic discharge can affect electronic components. Follow the Electrostatic Discharge Precautions Procedure listed below during furnace installation and servicing to protect the furnace electronic control. Precautions will prevent electrostatic discharges from personnel and hand tools which are held during the procedure. These precautions will help to avoid exposing the control to electrostatic discharge by putting the furnace, the control, and the person at the same electrostatic potential.

1. Disconnect all power to the furnace. Multiple disconnects may be required. DO NOT TOUCH THE CONTROL OR ANY WIRE CONNECTED TO THE CONTROL PRIOR TO DISCHARGING YOUR BODY'S ELECTROSTATIC CHARGE TO GROUND.
2. Firmly touch the clean, unpainted, metal surface of the furnace chassis which is close to the control. Tools held in a person's hand during grounding will be satisfactorily discharged.
3. After touching the chassis, you may proceed to service the control or connecting wires as long as you do nothing to recharge your body with static electricity (for example; DO NOT move or shuffle your feet, do not touch ungrounded objects, etc.).
4. If you touch ungrounded objects (and recharge your body with static electricity), firmly touch a clean, unpainted metal surface of the furnace again before touching control or wires.
5. Use this procedure for installed and uninstalled (ungrounded) furnaces.
6. Before removing a new control from its container, discharge your body's electrostatic charge to ground to protect the control from damage. If the control is to be installed in a furnace, follow items 1 through 4 before bringing the control or yourself in contact with the furnace. Put all used and new controls into containers before touching ungrounded objects.
7. An ESD service kit (available from commercial sources) may also be used to prevent ESD damage.

LOCATION

⚠ WARNING

CARBON MONOXIDE POISONING AND UNIT DAMAGE HAZARD

Failure to follow this warning could result in personal injury or death, and unit component damage.

Corrosive or contaminated air may cause failure of parts containing flue gas, which could leak into the living space. Air for combustion must not be contaminated by halogen compounds, which include fluoride, chloride, bromide, and iodide. These elements can corrode heat exchangers and shorten furnace life. Air contaminants are found in aerosol sprays, detergents, bleaches, cleaning solvents, salts, air fresheners, and other household products. Do not install furnace in a corrosive or contaminated atmosphere. Make sure all combustion and circulating air requirements are met, in addition to all local codes and ordinances.

GENERAL

This multipoise furnace is shipped in packaged configuration. Some assembly and modifications are required when used in any of the four applications shown in Figure 4.

This furnace must:

be installed so the electrical components are protected from water.

not be installed directly on any combustible material other than wood flooring for upflow applications. Downflow installations require use of a factory−approved floor base, coil model numbers END4X, ENW4X or coil casing model number NAEA when installed on combustible materials or wood flooring. (Refer to SAFETY CONSIDERATIONS).

be located as close to the chimney or vent and attached to an air distribution system. Refer to Air Ducts section.

Figure 4 — Multipoise Orientations

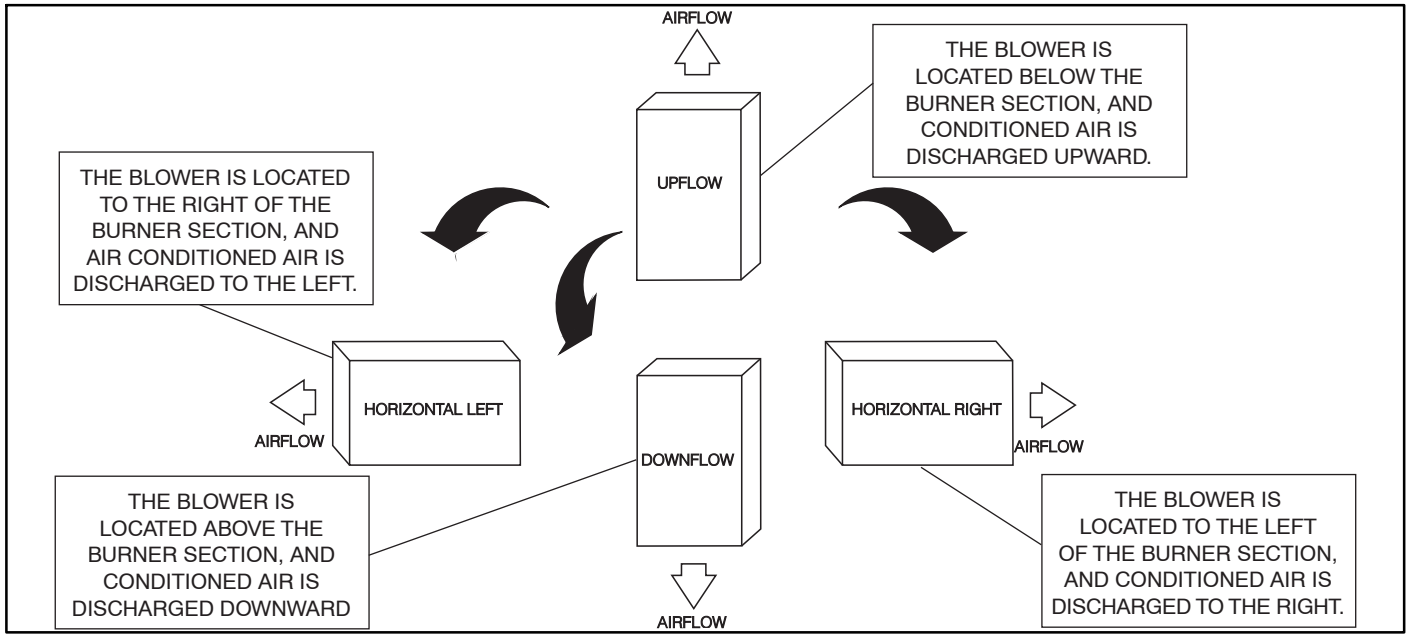

A02097

be provided ample space for servicing and cleaning. Always comply with minimum fire protection clearances shown on the furnace clearance to combustible label.

The following types of furnace installations may require OUTDOOR AIR for combustion due to chemical exposures:

Commercial buildings

Buildings with indoor pools

Laundry rooms

Hobby or craft rooms, and

Chemical storage areas

If air is exposed to the following substances, it should not be used for combustion air, and outdoor air may be required for combustion:

Permanent wave solutions

Chlorinated waxes and cleaners

Chlorine based swimming pool chemicals

Water softening chemicals

De−icing salts or chemicals

Carbon tetrachloride

Halogen type refrigerants

Cleaning solvents (such as perchloroethylene)

Printing inks, paint removers, varnishes, etc.

Hydrochloric acid

Cements and glues

Antistatic fabric softeners for clothes dryers

Masonry acid washing materials

All fuel−burning equipment must be supplied with air for fuel combustion. Sufficient air must be provided to avoid negative pressure in the equipment room or space. A positive seal must be made between the furnace cabinet and the return−air duct to prevent pulling air from the burner area and from draft safeguard opening.

⚠ WARNING

FIRE, INJURY OR DEATH HAZARD

Failure to follow this warning could result in personal injury, death and/or property damage.

When the furnace is installed in a residential garage, the burners and ignition sources must be located at least 18 in. (457 mm) above the floor. The furnace must be located or protected to avoid damage by vehicles. When the furnace is installed in a public garage, airplane hangar, or other building having a hazardous atmosphere, the furnace must be installed in accordance with the NFPA 54/ANSI Z223.1−2012 . (See Figure 5)

⚠ CAUTION

PERSONAL INJURY AND/OR PROPERTY DAMAGE HAZARD

Failure to follow this caution may result in furnace component damage.

This gas furnace may be used for heating buildings under construction provided that:

−The furnace is permanently installed with all electrical wiring, piping, venting and ducting installed according to these installation instructions. A return air duct is provided, sealed to the furnace casing, and terminated outside the space containing the furnace. This prevents a negative pressure condition as created by the circulating air blower, causing a flame rollout and/or drawing combustion products into the structure.

−The furnace is controlled by a thermostat. It may not be hot wired to provide heat continuously to the structure without thermostatic control.

−Clean outside air is provided for combustion. This is to minimize the corrosive effects of adhesives, sealers and other construction materials. It also prevents the entrainment of drywall dust into combustion air, which can cause fouling and plugging of furnace components.

−The temperature of the return air to the furnace is maintained between 55°F (13°C) and 80°F (27°C), with no evening setback or shutdown. The use of the furnace while the structure is under construction is deemed to be intermittent operation per our installation instructions.

−The air temperature rise is within the rated rise range on the furnace rating plate, and the gas input rate has been set to the nameplate value.

−The filters used to clean the circulating air during the construction process must be either changed or thoroughly cleaned prior to occupancy.

−The furnace, ductwork and filters are cleaned as necessary to remove drywall dust and construction debris from all HVAC system components after construction is completed.

−Verify proper furnace operating conditions including ignition, gas input rate, air temperature rise, and venting according to these installation instructions.

Figure 5 — Installation in a Garage

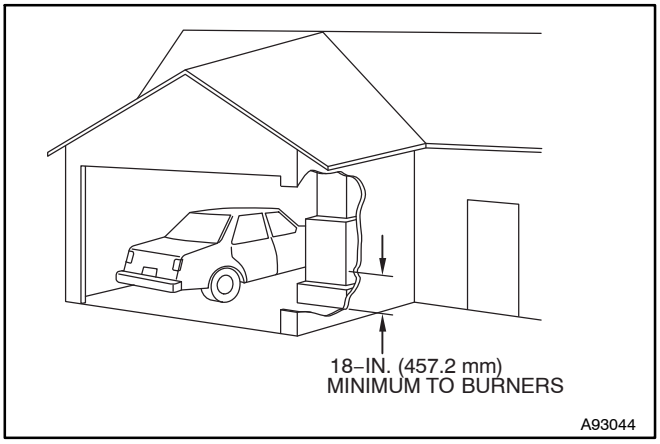

⚠ WARNING

FIRE HAZARD

Failure to follow this warning could result in personal injury, death and/or property damage.

Do not install the furnace on its back or hang furnace with control compartment facing downward. Safety control operation will be adversely affected. Never connect return−air ducts to the back of the furnace. (See Figure 6)

Figure 6 — Prohibit Installation on Back

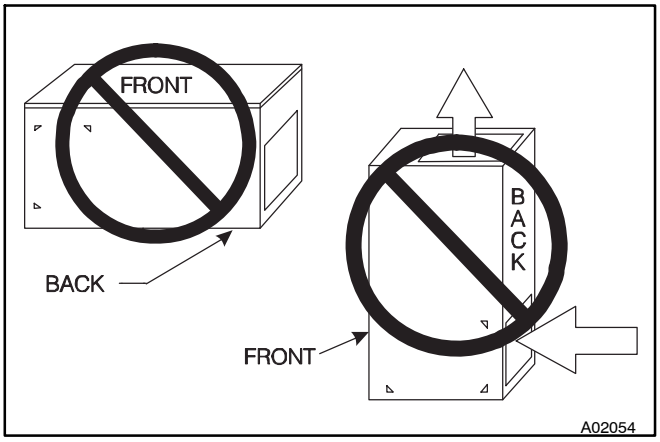

LOCATION RELATIVE TO COOLING EQUIPMENT

The cooling coil must be installed parallel with, or on the downstream side of the unit to avoid condensation in the heat exchangers. When installed parallel with the furnace, dampers or other flow control must prevent chilled air from entering the furnace. If the dampers are manually operated, they must be equipped with means to prevent operation of either unit unless the damper is in the full−heat or full−cool position.

AIR FOR COMBUSTION AND VENTILATION

Provisions for adequate combustion, ventilation, and dilution air must be provided in accordance with:

Section 9.3 of the NFPA 54 / ANSI Z223.1−2012, Air for Combustion and Ventilation, and applicable provisions of the local building codes.

⚠ CAUTION

FURNACE CORROSION HAZARD

Failure to follow this caution may result in furnace damage.

Air for combustion must not be contaminated by halogen compounds, which include fluoride, chloride, bromide, and iodide. These elements can corrode heat exchangers and shorten furnace life. Air contaminants are found in aerosol sprays, detergents, bleaches, cleaning solvents, salts, air fresheners, and other household products.

⚠ WARNING

CARBON MONOXIDE POISONING HAZARD

Failure to follow this warning could result in personal injury or death.

The operation of exhaust fans, kitchen ventilation fans, clothes dryers, attic exhaust fans or fireplaces could create a NEGATIVE PRESSURE CONDITION at the furnace. Make–up air MUST be provided for the ventilation devices, in addition to that required by the furnace. Refer to Carbon Monoxide Poisoning Hazard warning in venting section of these instructions to determine if an adequate amount of make–up air is available.

The requirements for combustion and ventilation air depend upon whether or not the furnace is located in a space having a volume of at least 50 cu/ft. per 1,000 Btuh input rating for all gas appliances installed in the space.

Spaces having less than 50 cu/ft. per 1,000 Btuh require the OUTDOOR COMBUSTION AIR METHOD.

Spaces having at least 50 cu/ft. per 1,000 Btuh may use the INDOOR COMBUSTION AIR, STANDARD or KNOWN AIR INFILTRATION METHOD.

Outdoor Combustion Air Method

1. Provide the space with sufficient air for proper combustion, ventilation, and dilution of flue gases using permanent horizontal or vertical duct(s) or opening(s) directly communicating with the outdoors or spaces that freely communicate with the outdoors.
2. Figure 7 illustrates how to provide TWO OUTDOOR OPENINGS, one inlet and one outlet combustion and ventilation air opening, to the outdoors.
   a. One opening **MUST** commence within 12 in. (300 mm) of the ceiling and the second opening **MUST** commence within 12 in. (300 mm) of the floor.
   b. Size openings and ducts per Figure 7 and Table 2.
   c. TWO HORIZONTAL DUCTS require 1 sq./in. of free area per 2,000 Btuh (1,100 mm^2/kW) of combined input for all gas appliances in the space per Figure 7 and Table 2.
   d. TWO OPENINGS OR VERTICAL DUCTS require 1 sq./in. of free area per 4,000 Btuh (550 mm^2/kW) for combined input of all gas appliances in the space per Figure 7 and Table 2.
3. ONE OUTDOOR OPENING requires:
   a. 1 square inch of free area per 3,000 Btuh (734 mm2/kW) for combined input of all gas appliances in the space per Table 2 and
   b. Not less than the sum of the areas of all vent connectors in the space.

The opening shall commence within 12 in. (300 mm) of the ceiling. Appliances in the space shall have clearances of at least 1 in. (25 mm) from the sides and back and 6 in. (150 mm) from the front. The opening shall directly communicate with the outdoors or shall communicate through a vertical or horizontal duct to the outdoors or spaces (crawl or attic) that freely communicate with the outdoors.

Indoor Combustion Air NFPA & AGA

Standard and **Known–Air–Infiltration Rate** Methods

Indoor air is permitted for combustion, ventilation, and dilution, if the **Standard** or **Known–Air–Infiltration Method** is used.

⚠ WARNING

CARBON MONOXIDE POISONING HAZARD

Failure to follow this warning could result in death and/or personal injury.

Many homes require air to be supplied from outdoors for furnace combustion, ventilation, and dilution of flue gases. The furnace combustion air supply must be provided in accordance with this instruction manual.

Table 2—Minimum Free Area Required for Each Combustion Air Opening of Duct to Outdoors

FURNACE INPUT (BTUH)	TWO HORIZONTAL DUCTS (1 SQ. IN./2,000 BTUH) (1,100 SQ. MM/KW)		SINGLE DUCT OR OPENING (1 SQ. IN./3,000 BTUH) (734 SQ. MM/KW)		TWO OPENINGS OR VERTICAL DUCTS (1 SQ. IN./4,000 BTUH) (550 SQ. MM/KW)	
	Free Area of Opening and Duct Sq. In. (Sq. mm)	Round Duct Dia. In. (mm)	Free Area of Opening and Duct Sq. In. (Sq. mm)	Round Duct Dia. In. (mm)	Free Area of Opening and Duct Sq. In. (Sq. mm)	Round Duct Dia. In. (mm)
44,000	22 (14194)	6 (152)	14.7 (9484)	5 (127)	11 (7096)	4 (102)
66,000	33 (21290)	7 (178)	22.0 (14193)	6 (152)	16.5 (10645)	5 (127)
88,000	44 (28387)	8 (203)	29.3 (18903)	7 (178)	22 (14193)	6 (152)
110,000	55 (35484)	9 (229)	36.7 (23677)	7 (178)	27.5 (17742)	6 (152)
132,000	66 (42580)	10 (254)	44 .0 (28387)	8 (203)	33 (21290)	7 (178)
154,000	77 (49677)	10 (254)	51.3 (33096)	9 (229)	38.5 (24839)	8 (203)

EXAMPLES: Determining Free Area

FURNACE		WATER HEATER		TOTAL INPUT		
110,000	+	30,000	=	(140,000 divided by 4,000)	=	35.0 Sq. In. for each two Vertical Ducts or Openings
66,000	+	40,000	=	(106,000 divided by 3,000)	=	35.3 Sq. In. for a Single Duct or Opening
88,000	+	30,000	=	(118,000 divided by 2,000)	=	59.0 Sq. In. for each of two Horizontal Ducts

Table 3—Minimum Space Volumes for 100% Combustion, Ventilation, and Dilution from Indoors

OTHER THAN FAN-ASSISTED TOTAL (1,000'S BTUH GAS INPUT RATE)				FAN-ASSISTED TOTAL (1,000'S BTUH GAS INPUT RATE)					
ACH	30	40	50	44	66	88	110	132	154
	Space Volume Ft^3 (M^3)								
0.60	1,050 (29.7)	1,400 (39.6)	1,750 (49.5)	1,100 (31.1)	1,650 (46.7)	2,200 (62.2)	2,750 (77.8)	3,300 (93.4)	3,850 (109.0)
0.50	1,260 (35.6)	1,680 (47.5)	2,100 (59.4)	1,320 (37.3)	1,980 (56.0)	2,640 (74.7)	3,300 (93.4)	3,960 (112.1)	4,620 (130.8)
0.40	1,575 (44.5)	2,100 (59.4)	2,625 (74.3)	1,650 (46.7)	2,475 (70.0)	3,300 (93.4)	4,125 (116.8)	4,950 (140.1)	5,775 (163.5)
0.30	2,100 (59.4)	2,800 (79.2)	3,500 (99.1)	2,200 (62.2)	3,300 (93.4)	4,400 (124.5)	5,500 (155.7)	6,600 (186.8)	7,700 (218.0)
0.20	3,150 (89.1)	4,200 (118.9)	5,250 (148.6)	3,300 (93.4)	4,950 (140.1)	6,600 (186.8)	8,250 (233.6)	9,900 (280.3)	11,550 (327.0)
0.10	6,300 (178.3)	8,400 (237.8)	10,500 (297.3)	6,600 (186.8)	9,900 (280.3)	13,200 (373.7)	16,500 (467.2)	19,800 (560.6)	23,100 (654.1)
0.00	NP	NP	NP	NP	NP	NP	NP	NP	NP

NP = Not Permitted

Figure 7 — Air for Combustion, Ventilation, and Dilution for Outdoors

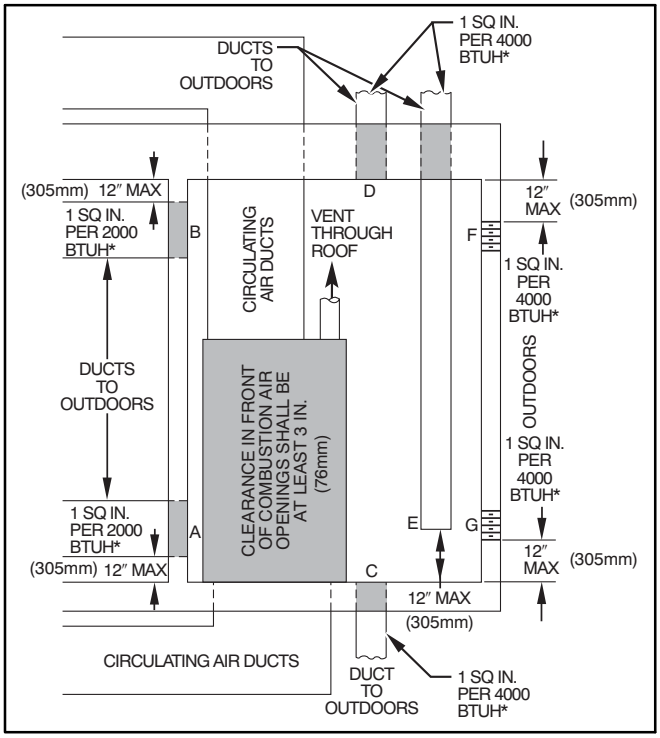

*Minimum dimensions of 3–in. (76 mm).
NOTE: Use any of the following combinations of openings:
A & B C & D D & E F & G

A03174

The **Standard** Method:

1. The space has no less volume than 50 cu/ft. per 1,000 Btuh of the maximum input ratings for all gas appliances installed in the space and
2. The air infiltration rate is not known to be less than 0.40 air changes per hour (ACH).

The **Known Air Infiltration Rate** Method shall be used, if the infiltration rate is known to be:

1. Less than 0.40 ACH and
2. Equal to or greater than 0.10 ACH

Infiltration rates greater than 0.60 ACH shall not be used. The minimum required volume of the space varies with the number of ACH and shall be determined per Table 3 or Equations 1 and 2. Determine the minimum required volume for each appliance in the space and add the volumes together to get the total minimum required volume for the space.

Figure 8 — Air for Combustion, Ventilation, and Dilution from Indoors

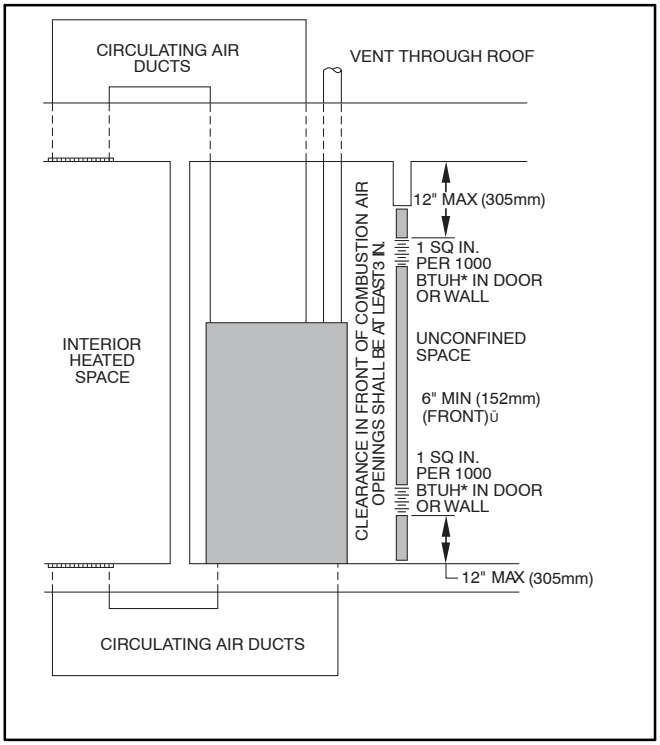

* Minimum opening size is 100 sq in. (64516 sq. mm)with minimum dimensions of 3 in. (76 mm)
† Minimum of 3 in. (76 mm) when type-B1 vent is used.

A03175

Table 3 – Minimum Space Volumes were determined by using the following equations from the National Fuel Gas Code ANSI Z223.1–2012/NFPA 54–2012, 9.3.2.2:

1. For **other than fan–assisted appliances**, such as a draft hood–equipped water heater:

$$\text{Volume}_{\text{Other}} = \frac{21\text{ft}^3}{\text{ACH}}\left(\frac{I_{\text{other}}}{1000\ \text{Btu/hr}}\right)$$

A04002

2. For **fan–assisted appliances** such as this furnace:

$$\text{Volume}_{\text{Fan}} = \frac{15\text{ft}^3}{\text{ACH}}\left(\frac{I_{\text{fan}}}{1000\ \text{Btu/hr}}\right)$$

A04003

If:

I_{other} = combined input of all other than **fan−assisted appliances** in Btuh/hr

I_{fan} = combined input of all fan−assisted appliances in Btuh/hr ACH = air changes per hour (ACH shall not exceed 0.60.) The following requirements apply to the **Standard** Method and to the **Known Air Infiltration Rate Method**.

1. Adjoining rooms can be considered part of a space if:
   a. There are no closeable doors between rooms.
   b. Combining spaces on same floor level. Each opening shall have free area of at least 1 in.^{2}/1,000 Btuh (2,000 mm^2/kW) of the total input rating of all gas appliances in the space, but not less than 100 in.^{2} (0.06 m2). One opening shall commence within 12 in. (300 mm) of the ceiling and the second opening shall commence within 12 in. (300 mm) of the floor. The minimum dimension of air openings shall be at least 3 in. (80 mm). (See Figure 8)
   c. Combining space on different floor levels. The volumes of spaces on different floor levels shall be considered as communicating spaces if connected by one or more permanent openings in doors or floors having free area of at least 2 in.^{2}/1,000 Btuh (4,400 mm^2/kW) of total input rating of all gas appliances.
2. An attic or crawlspace may be considered a space that freely communicates with the outdoors provided there are adequate permanent ventilation openings directly to outdoors having free area of at least 1−in.^{2}/4,000 Btuh of total input rating for all gas appliances in the space.
3. In spaces that use the Indoor Combustion Air Method, infiltration should be adequate to provide air for combustion, permanent ventilation and dilution of flue gases. However, in buildings with unusually tight construction, additional air MUST be provided using the methods described in the **Outdoor Combustion Air** Method section.

Unusually tight construction is defined as Construction with:

a. Walls and ceilings exposed to the outdoors have a continuous, sealed vapor barrier. Openings are gasketed or sealed and
b. Doors and openable windows are weatherstripped and
c. Other openings are caulked or sealed. These include joints around window and door frames, between sole plates and floors, between wall−ceiling joints, between wall panels, at penetrations for plumbing, electrical and gas lines, etc.

Combination of Indoor and Outdoor Air

1. Indoor openings shall comply with the I**ndoor Combustion Air** Method below and,
2. Outdoor openings shall be located as required in the **Outdoor Combustion Air** Method mentioned previously and,
3. Outdoor openings shall be sized as follows:
   a. Calculate the Ratio of all Indoor Space volume divided by required volume for **Indoor Combustion Air** Method below.
   b. Outdoor opening size reduction **Factor** is 1 minus the **Ratio** in a. above.
   c. Minimum size of Outdoor openings shall be the size required in **Outdoor Combustion Air** Method above multiplied by reduction **Factor** in b. above. The minimum dimension of air openings shall be not less than 3 in. (80 mm).

INSTALLATION

UPFLOW INSTALLATION

Bottom Return Air Inlet

These furnaces are shipped with bottom closure panel installed in bottom return−air opening. Remove and discard this panel when bottom return air is used. To remove bottom closure panel, perform the following:

1. Tilt or raise furnace and remove 2 screws holding bottom filler panel. (See Figure 9.)

Figure 9 — Removing Bottom Closure Panel

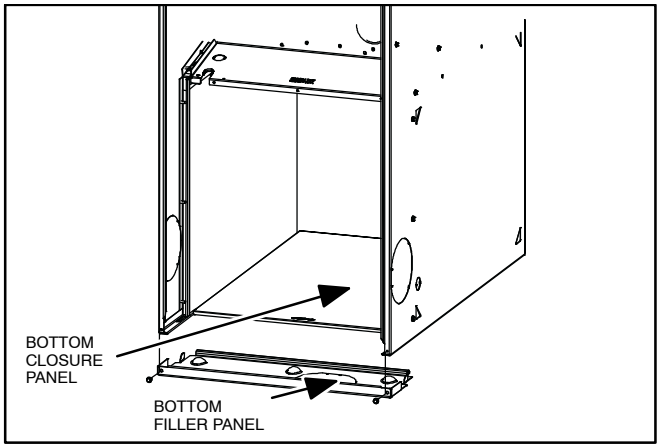

2. Rotate bottom filler panel downward to release holding tabs.
3. Remove bottom closure panel.
4. Reinstall bottom filler panel and screws.

Side Return Air Inlet

These furnaces are shipped with bottom closure panel installed in bottom return−air opening. This panel MUST be in place when only side return air is used.

NOTE: Side return−air openings can be used in UPFLOW and most HORIZONTAL configurations. Do not use side return−air openings in DOWNFLOW configuration.

In upflow position with side return inlet(s), leveling legs may be used. (See Figure 10) Install field−supplied, 5/16 x 1−1/2 in. (8 x 38 mm) (max) corrosion−resistant machine bolts, washers and nuts.

NOTE: Bottom closure must be used when leveling legs are used. It may be necessary to remove and reinstall bottom closure panel to install leveling legs. To remove bottom closure panel, see Item 1. in Bottom Return Air Inlet section.

Figure 10 — Leveling Legs

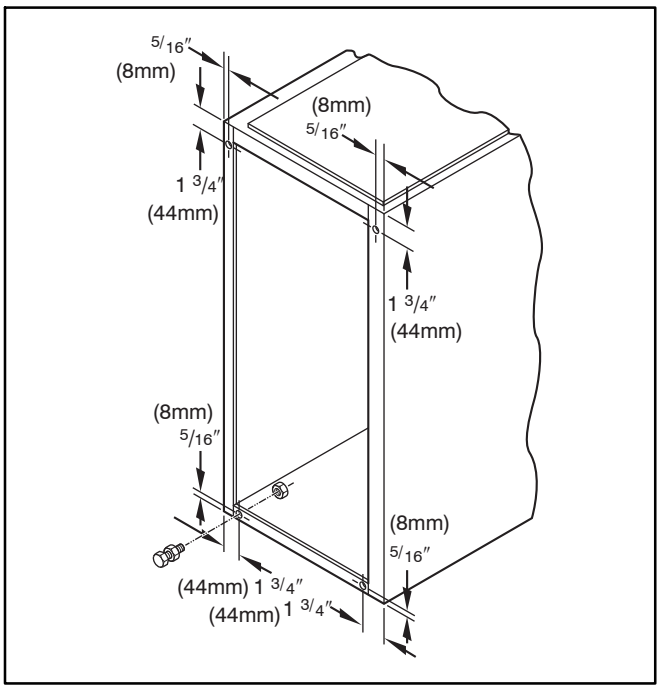

A89014

Leveling Legs (If Desired)

To install leveling legs:

1. Position furnace on its back. Locate and drill a hole in each bottom corner of furnace. (See Figure 10)
2. For each leg, install nut on bolt and then install bolt and nut in hole. (Install flat washer if desired.)
3. Install another nut on other side of furnace base. (Install flat washer if desired.)
4. Adjust outside nut to provide desired height, and tighten inside nut to secure arrangement.
5. Reinstall bottom closure panel if removed.

DOWNFLOW INSTALLATION

NOTE: For downflow applications, this furnace is approved for use on combustible flooring when any one of the following 3 accessories are used:

Downflow combustible floor subbase

Coil model number END4X or ENW4X

Coil casing model number NAEA

1. Determine application being installed from Table 4.
2. Construct hole in floor per Table 4 and Figure 11.
3. Construct plenum to dimensions specified in Table 4 and Figure 11.
4. If downflow subbase is used, install as shown in Figure 12. If coil model numbers END4X, ENW4X or coil casing model number NAEA is used, install as shown in Figure 13.

Figure 11 — Floor and Plenum Opening Dimensions

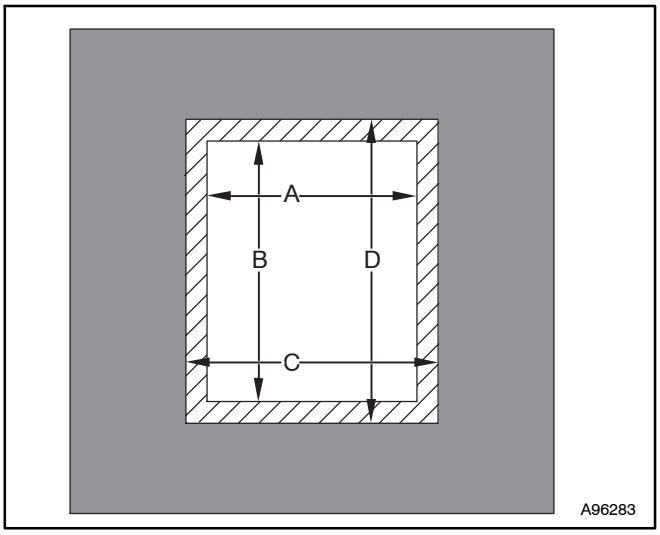

NOTE: It is recommended that the perforated supply−air duct flanges be completely folded over or removed from furnace when installing the furnace on a factory−supplied cased coil or coil box. To remove the supply−air duct flange, use wide duct pliers or hand seamers to bend flange back and forth until it breaks off. Be careful of sharp edges. (See Figure 14)

Figure 12 — Furnace, Plenum, and Subbase Installed on a Combustible Floor

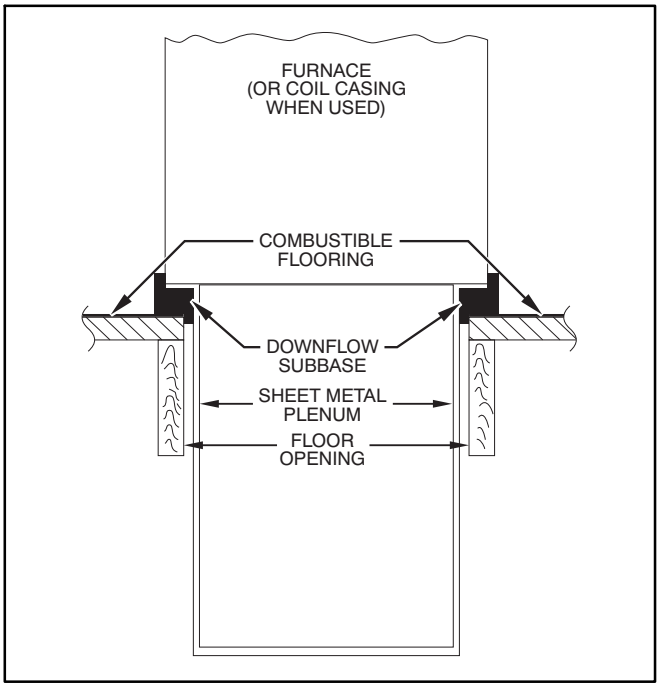

A96285

Figure 13 — Furnace, Plenum, and Coil or Coil Casing Installed on a Combustible Floor

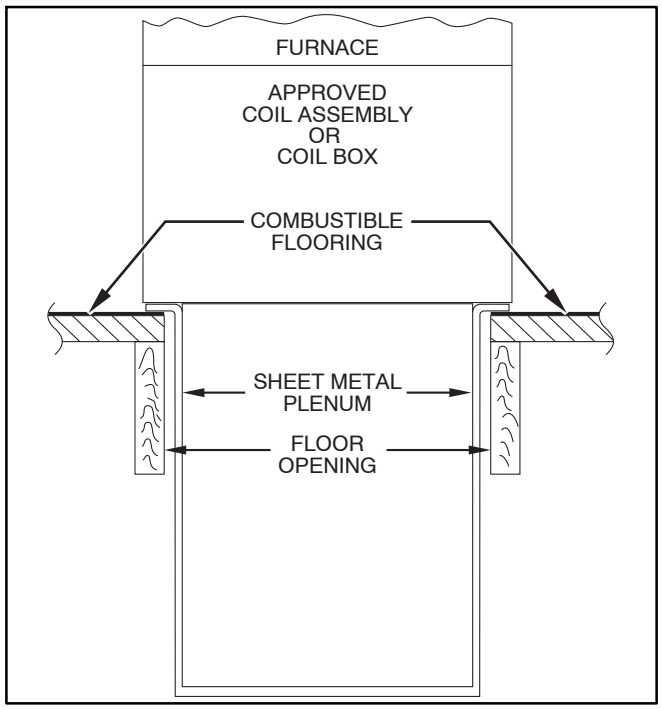

A08556

Bottom Return Air Inlet

These furnaces are shipped with bottom closure panel installed in bottom return−air opening. Remove and discard this panel when bottom return air is used. To remove bottom closure panel, perform the following:

1. Tilt or raise furnace and remove 2 screws holding bottom filler panel. (See Figure 9)
2. Rotate bottom filler panel downward to release holding tabs.
3. Remove bottom closure panel.
4. Reinstall bottom filler panel and screws.

HORIZONTAL INSTALLATION

⚠ WARNING

FIRE, EXPLOSION, AND CARBON MONOXIDE POISONING HAZARD

Failure to follow this warning could result in personal injury, death, or property damage.

Do not install the furnace on its back or hang furnace with control compartment facing downward. Safety control operation will be adversely affected. Never connect return−air ducts to the back of the furnace.

The furnace can be installed horizontally in an attic or crawl space on either the left−hand (LH) or right−hand (RH) side. The furnace can be hung from floor joists, rafters or trusses or installed on a non−combustible platform, blocks, bricks or pad.

Suspended Furnace Support

The furnace may be supported under each end with threaded rod, angle iron or metal plumber's strap as shown. (See Figure 15 and Figure 16) Secure angle iron to bottom of furnace as shown. Heavy−gauge sheet metal straps (plumber's straps) may be used to suspend the furnace from each bottom corner. To prevent screws from pulling out, use 2 #8 x 3/4−in. (19 mm) screws into the side and 2 #8 x 3/4−in. (19 mm) screws in the bottom of the furnace casing for each strap. (See Figure 15 and Figure 16)

If the screws are attached to ONLY the furnace sides and not the bottom, the straps must be vertical against the furnace sides and not pull away from the furnace sides, so that the strap attachment screws are not in tension (are loaded in shear) for reliable support.

Platform Furnace Support

Construct working platform at location where all required furnace clearances are met. (See Figure 2 and Figure 17) For furnaces with 1−in. (25 mm) clearance requirement on side, set furnace on non− combustible blocks, bricks or angle iron. For crawl space installations, if the furnace is not suspended from the floor joists, the ground underneath furnace must be level and the furnace set on blocks or bricks.

Roll−Out Protection

Provide a minimum 17−3/4 in. x 22 in. (451 x 559 mm) piece of sheet metal for flame roll−out protection in front of burner area for furnaces closer than 12 inches (305 mm) above the combustible deck or suspended furnaces closer than 12 inches (305 mm) to joists. The sheet metal MUST extend underneath the furnace casing by 1 in. (25 mm) with the door removed.

The bottom closure panel on furnaces of widths 17−1/2 in. (445 mm) and larger may be used for flame roll−out protection when bottom of furnace is used for return air connection. See Figure 17 for proper orientation of roll−out shield.

Bottom Return Air Inlet

These furnaces are shipped with bottom closure panel installed in bottom return−air opening. Remove and discard this panel when bottom return air is used. To remove bottom closure panel, perform the following:

1. Tilt or raise furnace and remove 2 screws holding bottom filler panel. (See Figure 9)
2. Rotate bottom filler panel downward to release holding tabs.
3. Remove bottom closure panel.
4. Reinstall bottom filler panel and screws.

Side Return Air Inlet

These furnaces are shipped with bottom closure panel installed in bottom return−air opening. This panel MUST be in place when side return air inlet(s) is used without a bottom return air inlet.

Not all horizontal furnaces are approved for side return air connections. (See Figure 20)

FILTER ARRANGEMENT

⚠ WARNING

CARBON MONOXIDE AND POISONING HAZARD

Failure to follow this warning could result in personal injury, death and/or property damage.
Never operate a furnace without a filter or with filter access door removed.

There are no provisions for an internal filter rack in these furnaces.

A field−supplied accessory external filter rack is required.

This furnace requires 1 in. (25 mm) external filter rack.

Refer to the instructions supplied with external filter rack for assembly and installation options.

Table 4—Opening Dimensions – In. (mm)

FURNACE CASING WIDTH	APPLICATION	PLENUM OPENING		FLOOR OPENING	
		A	B	C	D
14–3/16 (360)	Upflow Applications on Combustible or Noncombustible Flooring (subbase not required)	12–11/16 (322)	21–5/8 (549)	13–5/16 (338)	22–1/4 (565)
	Downflow Applications on Noncombustible Flooring (subbase not required)	12–9/16 (319)	19 (483)	13–3/16 (335)	19–5/8 (498)
	Downflow Applications on Combustible Flooring (subbase required)	11–13/16 (284)	19 (483)	13–7/16 (341)	20–5/8 (600)
	Downflow Applications on Combustible Flooring with Coil END4X, ENW4X or Coil Casing NAEA (subbase not required)	12–5/16 (319)	19 (483)	13–5/16 (338)	20 (508)
17–1/2 (445)	Upflow Applications on Combustible or Noncombustible Flooring (subbase not required)	16 (406)	21–5/8 (549)	16–5/8 (422)	22–1/4 (565)
	Downflow Applications on Noncombustible Flooring (subbase not required)	15–7/8 (403)	19 (483)	16–1/2 (419)	19–5/8 (498)
	Downflow Applications on Combustible Flooring (subbase required)	15–1/8 (384)	19 (483)	16–3/4 (425)	20–5/8 (600)
	Downflow Applications on Combustible Flooring with Coil END4X, ENW4X or Coil Casing NAEA (subbase not required)	15–1/2 (394)	19 (483)	16–1/2 (419)	20 (508)
21 (533)	Upflow Applications on Combustible or Noncombustible Flooring (subbase not required)	19–1/2 (495)	21–5/8 (549)	20–1/8 (511)	22–1/4 (565)
	Downflow Applications on Noncombustible Flooring (subbase not required)	19–3/8 (492)	19 (483)	20 (508)	19–5/8 (498)
	Downflow Applications on Combustible Flooring (subbase required)	18–5/8 (473)	19 (483)	20–1/4 (514)	20–5/8 (600)
	Downflow Applications on Combustible Flooring with Coil END4X, ENW4X or Coil Casing NAEA (subbase not required)	19 (483)	19 (483)	20 (508)	20 (508)
24–1/2 (622)	Upflow Applications on Combustible or Noncombustible Flooring (subbase not required)	23 (584)	21–1/8 (537)	23–5/8 (600)	22–1/4 (565)
	Downflow Applications on Noncombustible Flooring (subbase not required)	22–7/8 (581)	19 (483)	23–1/2 (597)	19–5/8 (498)
	Downflow Applications on Combustible flooring (subbase required)	22–1/8 (562)	19 (483)	23–3/4 (603)	20–5/8 (600)
	Downflow Applications on Combustible Flooring with Coil END4X, ENW4X or Coil Casing NAEA (subbase not required)	22–1/2 (572)	19 (483)	23–1/2 (597)	20 (508)

AIR DUCTS

General Requirements

The duct system should be designed and sized according to accepted national standards such as those published by: Air Conditioning Contractors Association (ACCA), Sheet Metal and Air Conditioning Contractors National Association (SMACNA) or American Society of Heating, Refrigerating and Air Conditioning Engineers (ASHRAE) or consult The Air Systems Design Guidelines reference tables available from your local distributor. The duct system should be sized to handle the required system design CFM at the design external static pressure. The furnace airflow rates are provided in Table 5 – AIR DELIVERY–CFM (With Filter).

When a furnace is installed so that the supply ducts carry air circulated by the furnace to areas outside the space containing the furnace, the return air shall also be handled by duct(s) sealed to the furnace casing and terminating outside the space containing the furnace.

Secure ductwork with proper fasteners for type of ductwork used. Seal supply– and return–duct connections to furnace with code approved tape or duct sealer.

NOTE: Flexible connections should be used between ductwork and furnace to prevent transmission of vibration. Ductwork passing through unconditioned space should be insulated and sealed to enhance system performance. When air conditioning is used, a vapor barrier is recommended.

Maintain a 1–in. (25 mm) clearance from combustible materials to supply air ductwork for a distance of 36 in. (914 mm) horizontally from the furnace. See NFPA 90B or local code for further requirements.

Ductwork Acoustical Treatment

NOTE: Metal duct systems that do not have a 90 degree elbow and 10 ft. (3 M) of main duct to the first branch take–off may require internal acoustical lining. As an alternative, fibrous ductwork may be used if constructed and installed in accordance with the latest edition of SMACNA construction standard on fibrous glass ducts. Both acoustical lining and fibrous ductwork shall comply with NFPA 90B as tested by UL Standard 181 for Class 1 Rigid air ducts.

Supply Air Connections

For a furnace not equipped with a cooling coil, the outlet duct shall be provided with a removable access panel. This opening shall be accessible when the furnace is installed and shall be of such a size that the heat exchanger can be viewed for possible openings using light assistance or a probe can be inserted for sampling the air stream. The cover attachment shall prevent leaks.

Table 5—Air Delivery – CFM (with Filter)*

FURNACE SIZE	RETURN–AIR INLET	SPEED	EXTERNAL STATIC PRESSURE (in. w.c.)									
			0.1	0.2	0.3	0.4	0.5	0.6	0.7	0.8	0.9	1.0
0451408A	Bottom or Side(s)	High	1035	995	945	895	835	770	675	565	390	195
		Med–Low	865	830	790	745	690	625	545	440	250	195
		Low	760	720	680	635	580	520	445	345	220	195
0451412A	Bottom or Side(s)	High	1440	1375	1305	1240	1160	1070	975	870	730	560
		Med–Low	1360	1300	1240	1175	1115	1040	950	850	725	575
		Low	1250	1210	1160	1100	1040	965	885	790	670	520
0701408A	Bottom or Side(s)	High	1030	1005	965	925	870	810	740	645	465	280
		Med–Low	835	815	790	755	710	660	590	480	325	205
		Low	725	700	675	635	595	545	460	350	250	––
0701412A	Bottom or Side(s)	High	1425	1375	1320	1265	1200	1125	1035	940	830	655
		Med–Low	1320	1280	1240	1205	1140	1075	995	905	790	620
		Low	1200	1175	1145	1105	1050	990	920	840	725	555
0701716A	Bottom or Side(s)	High	1755	1700	1635	1505	1570	1435	1350	1260	1160	1055
		Med–Low	1550	1520	1475	1430	1375	1310	1240	1155	1070	970
		Low	1355	1340	1310	1280	1240	1190	1125	1060	975	890
0901714B	Bottom or Side(s)	High	1650	1600	1535	1465	1385	1285	1175	1055	895	645
		Med–High	1515	1485	1440	1380	1300	1220	1115	990	830	600
		Med–Low	1385	1360	1320	1260	1195	1120	1025	915	710	565
		Low	1205	1180	1160	1120	1065	1005	925	810	630	510
0902116A	Bottom or Side(s)	High	1940	1880	1805	1720	1635	1540	1425	1290	1090	830
		Med–Low	1740	1700	1650	1590	1525	1440	1335	1195	1010	820
		Low	1505	1505	1480	1440	1375	1300	1190	1045	890	740
0902120A	Bottom Only	High	2405	2310	2220	2130	2025	1920	1790	1660	1530	1350
		Med–Low	2170	2110	2040	1970	1895	1785	1675	1565	1420	1260
		Low	1920	1875	1835	1780	1715	1630	1535	1420	1275	1135
	Both Sides or 1 Side & Bottom	High	2530	2450	2365	2270	2165	2065	1940	1805	1670	1505
		Med–Low	2230	2170	2110	2050	1985	1890	1780	1660	1525	1360
		Low	1895	1890	1845	1815	1755	1685	1600	1480	1350	1180
	1 Side Only	High	2475	2395	2300	2200	2090	1985	1865	1730	1585	1425
		Med–Low	2105	2145	2070	2010	1940	1845	1735	1620	1475	1325
		Low	1850	1860	1810	1770	1715	1650	1555	1445	1310	1150
1101712A	Bottom or Side(s)	High	1600	1550	1490	1425	1355	1260	1135	990	785	530
		Med–Low	1475	1435	1395	1335	1285	1185	1070	890	725	450
		Low	1315	1295	1265	1220	1155	1080	985	810	675	440
1102116A	Bottom or Side(s)	High	1980	1915	1835	1750	1655	1495	1365	1185	965	700
		Med–Low	1745	1710	1650	1560	1450	1340	1205	1090	865	605
		Low	1530	1515	1470	1400	1310	1215	1095	990	830	670
1102122A	Bottom Only	High	2485	2415	2340	2255	2160	2060	1950	1840	1720	1565
		Med–Low	2135	2100	2060	2000	1930	1860	1765	1670	1555	1425
		Low	1855	1840	1815	1775	1725	1675	1600	1510	1405	1290
	Bottom, Sides or 1 Side & Bottom	High	––	––	2355	2285	2190	2090	1965	1850	1705	1535
		Med–Low	2140	2100	2050	1990	1935	1865	1760	1670	1545	1410
		Low	1855	1840	1815	1775	1725	1675	1600	1510	1405	1290
	1 Side Only	High	2495	2440	2370	2290	2205	2120	2015	1910	1775	1625
		Med–Low	2030	2025	2000	1950	1905	1850	1750	1660	1555	1425
		Low	––	1735	1725	1695	1650	1595	1535	1455	1335	1230
1352116A	Bottom or Side(s)	High	2065	2000	1930	1835	1710	1590	1420	1235	1025	835
		Med–Low	1790	1755	1705	1640	1550	1465	1295	1145	945	775
		Low	1480	1480	1480	1450	1380	1295	1160	1005	855	670
1352422A	Bottom Only	High	2445	2365	2280	2190	2085	1980	1850	1705	1520	1355
		Med–Low	2130	2080	2025	1960	1880	1795	1690	1550	1405	1255
		Low	1860	1830	1800	1755	1705	1630	1530	1415	1280	1140
	Bottom, Sides or Side & Bottom	High	––	––	2355	2280	2160	2065	1930	1805	1655	1465
		Med–Low	2120	2075	1995	1970	1905	1835	1735	1645	1515	1325
		Low	1860	1830	1800	1755	1725	1630	1530	1415	1280	1140
	1 Side Only	High	––	––	2215	2130	2030	1920	1795	1675	1540	1385
		Med–Low	2070	2015	1970	1935	1855	1765	1655	1550	1445	1265
		Low	1860	1830	1800	1755	1725	1630	1530	1415	1280	1140
1552420A	Bottom Only	High	2465	2430	2375	2305	2215	2110	2000	1865	1715	1530
		Med–Low	2115	2095	2055	2005	1940	1845	1820	1675	1525	1390
		Low	1800	1790	1770	1735	1695	1640	1570	1465	1345	1225
	Both Sides or 1 Side & Bottom	High	––	––	2375	2285	2185	2105	1995	1870	1720	1555
		Med–Low	2155	2125	2075	2015	1935	1830	1780	1635	1485	1365
		Low	1800	1790	1770	1735	1695	1640	1570	1465	1345	1225
	1 Side Only	High	––	––	2260	2180	2070	1975	1865	1740	1595	1440
		Med–Low	2140	2085	2020	1950	1850	1745	1695	1545	1415	1290
		Low	1800	1790	1770	1735	1695	1640	1570	1465	1345	1225

* A filter is required for each return–air inlet. Airflow performance included 3/4–in. (19 mm) washable filter media such as contained in factory–authorized accessory filter rack. To determine airflow performance without this filter, assume an additional 0.1 in. w.c. available external static pressure.

–– Indicates unstable operating conditions.

Figure 14 — Duct Flanges

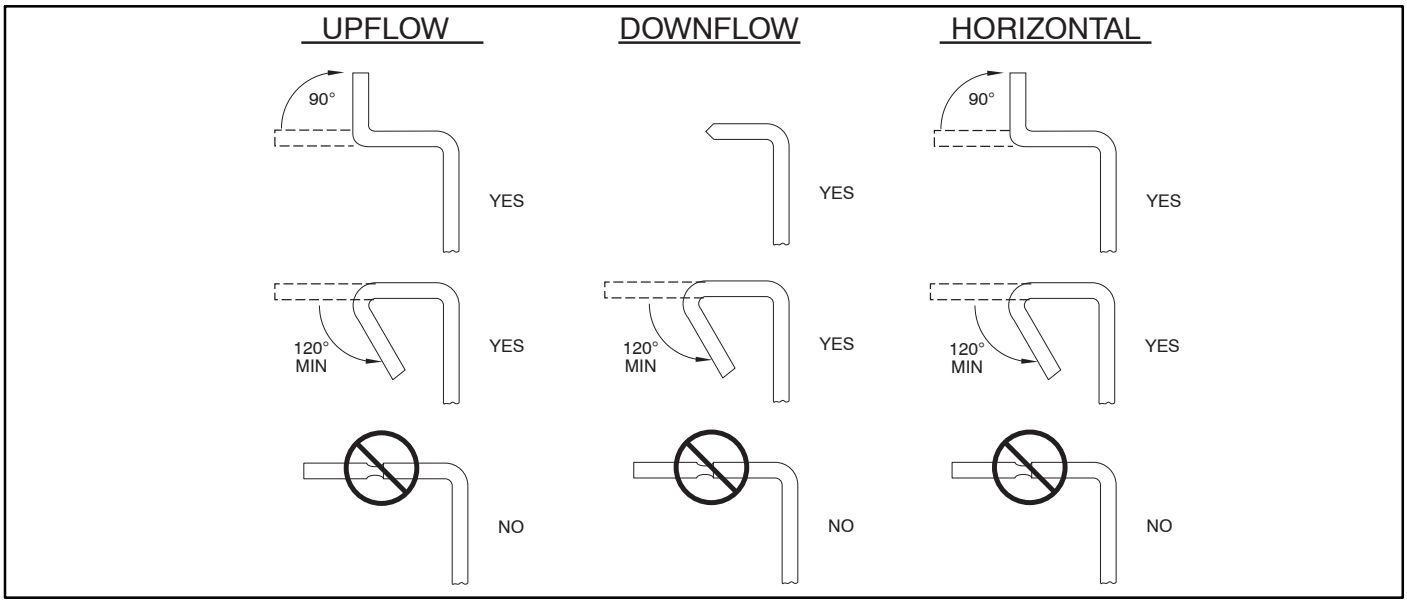

A02020

Figure 15 — Horizontal Unit Suspension

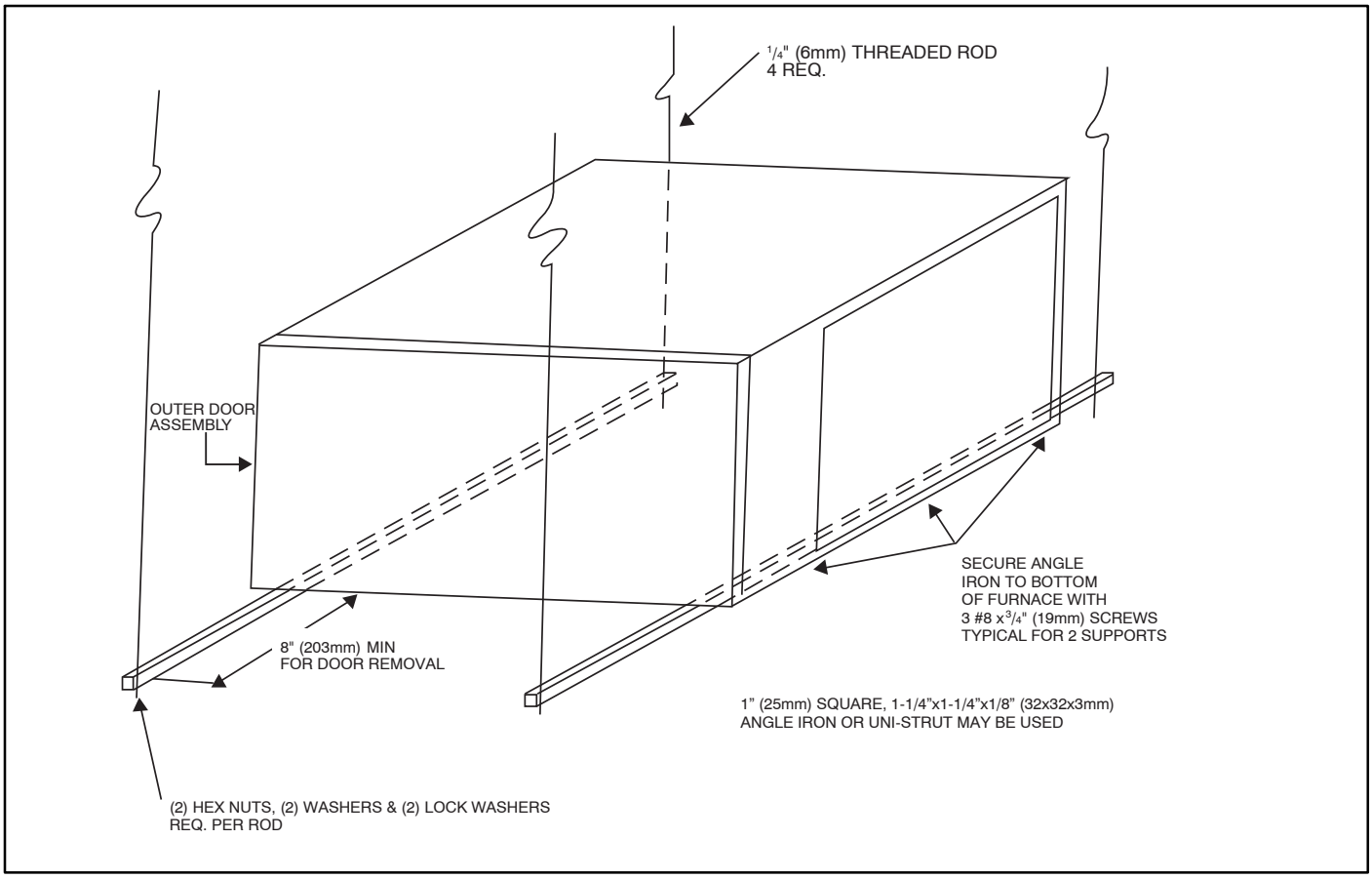

A10130

Figure 16 — Horizontal Suspension with Straps

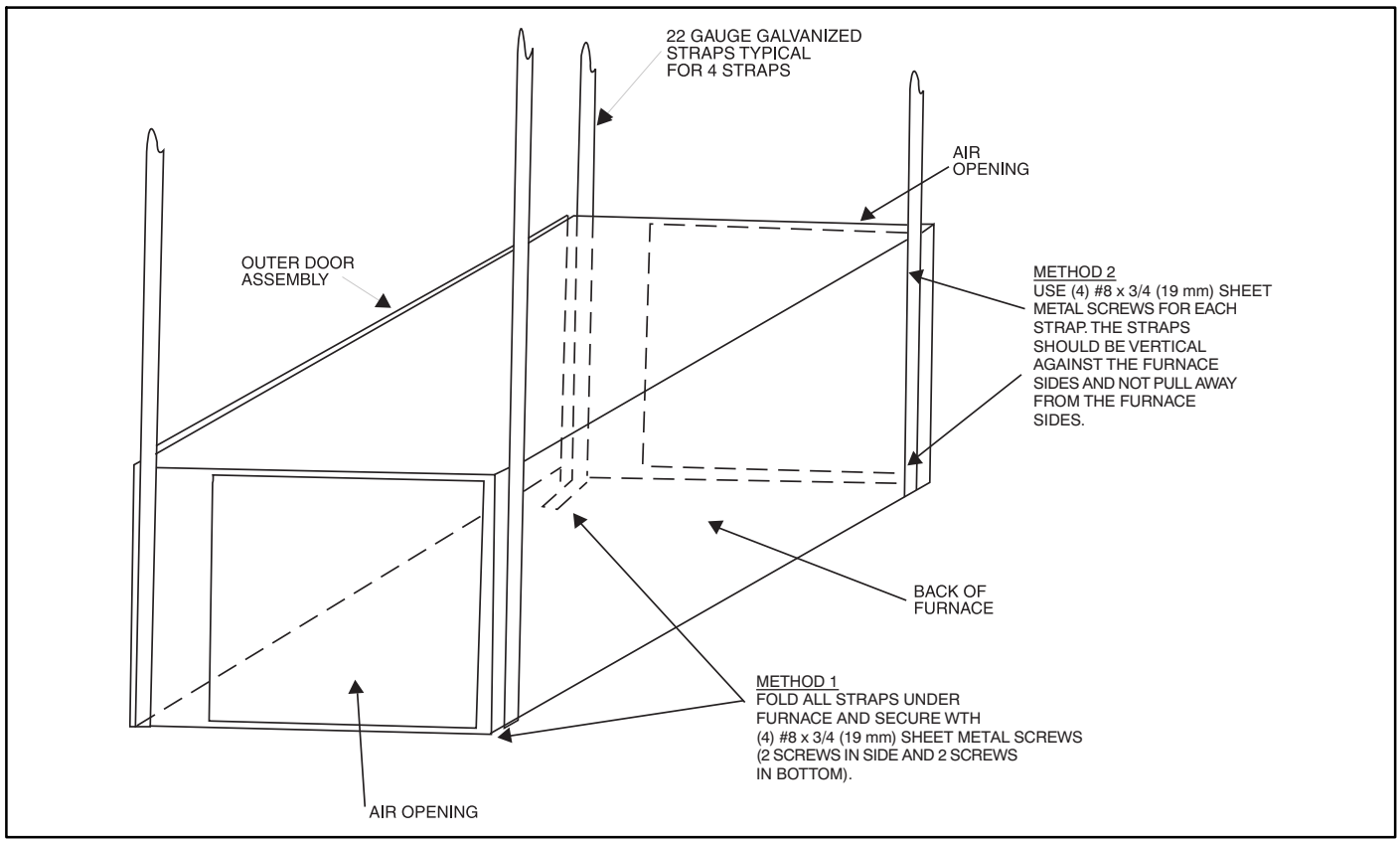

A10131

Figure 17 — Typical Attic Installation

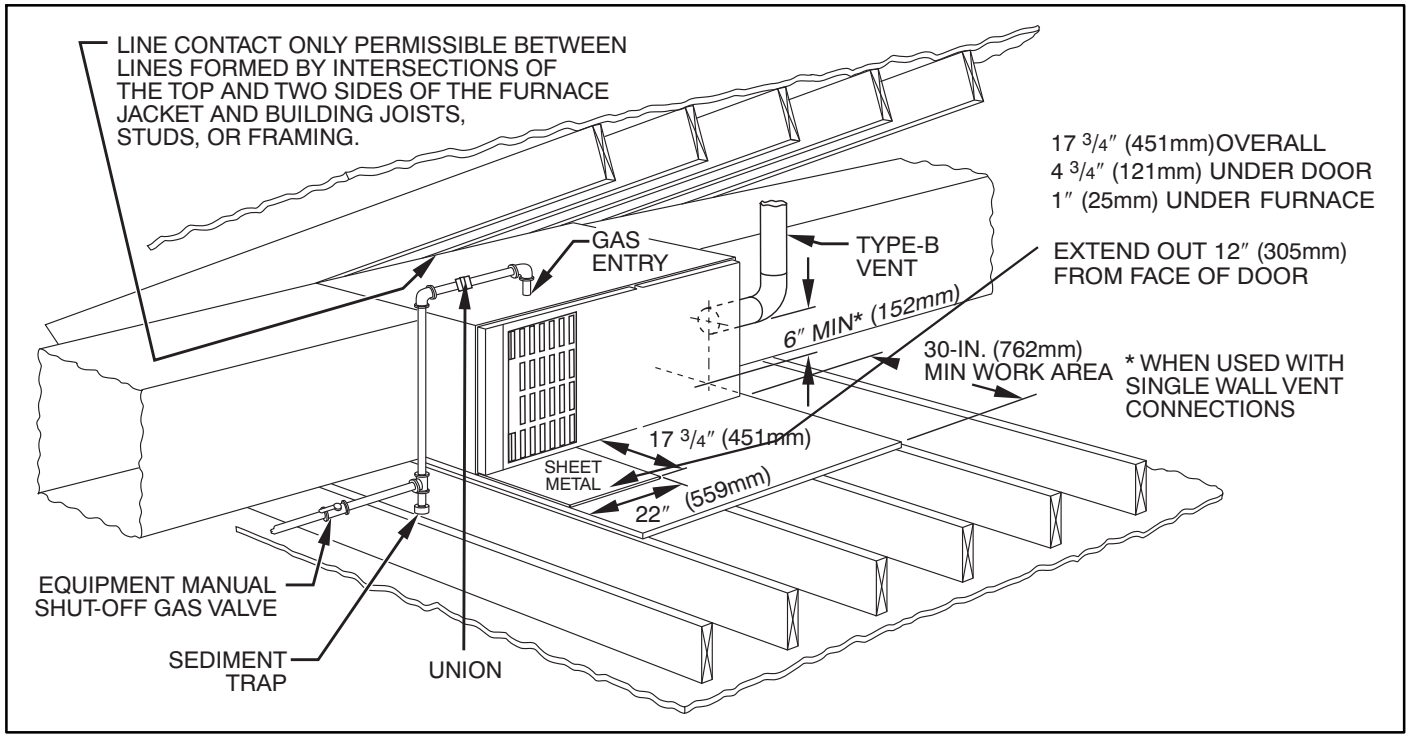

A10164

Figure 18 — Upflow Return Air Configurations and Restrictions

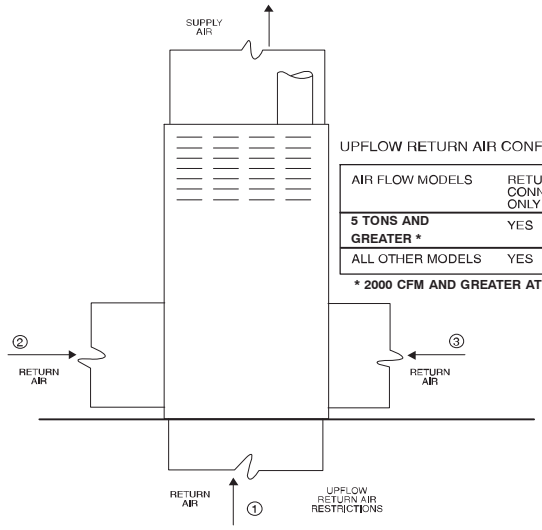

UPFLOW RETURN AIR CONFIGURATIONS AND RESTRICTIONS

AIR FLOW MODELS	RETURN AIR CONNECTION 1 ONLY	RETURN AIR CONNECTION 2 ONLY	RETURN AIR CONNECTION 3 ONLY	RETURN AIR COMBINATIONS OF 1, 2, AND 3
5 TONS AND GREATER *	YES	YES	YES	YES
ALL OTHER MODELS	YES	YES	YES	YES

*** 2000 CFM AND GREATER AT .6 ESP HI COOLING SPEED**

Figure 19 — Downflow Return Air Configurations and Restrictions

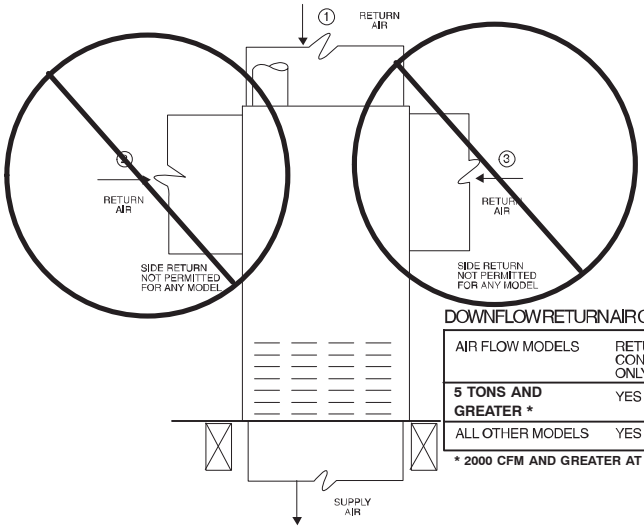

DOWNFLOW RETURN AIR CONFIGURATIONS AND RESTRICTIONS

AIR FLOW MODELS	RETURN AIR CONNECTION 1 ONLY	RETURN AIR CONNECTION 2 ONLY	RETURN AIR CONNECTION 3 ONLY	RETURN AIR COMBINATIONS OF 1, 2, AND 3
5 TONS AND GREATER *	YES	NO	NO	NO
ALL OTHER MODELS	YES	NO	NO	NO

*** 2000 CFM AND GREATER AT .6 ESP HI COOLING SPEED**

Figure 20 — Horizontal Return Air Configurations and Restrictions

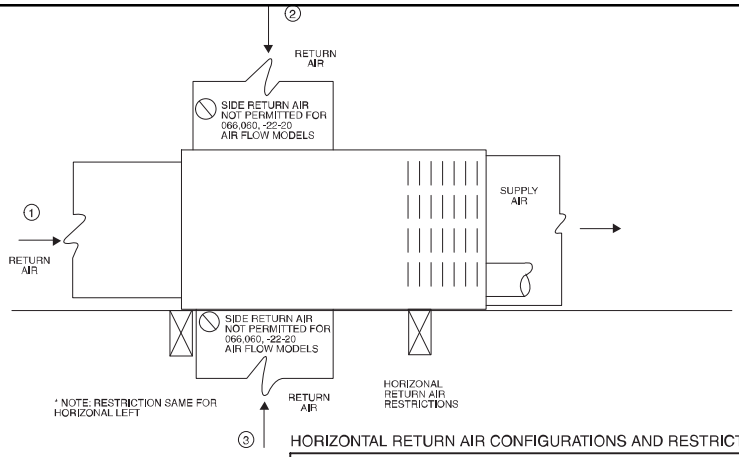

HORIZONTAL RETURN AIR CONFIGURATIONS AND RESTRICTIONS

AIR FLOW MODELS	RETURN AIR CONNECTION 1 ONLY	RETURN AIR CONNECTION 2 ONLY	RETURN AIR CONNECTION 3 ONLY	RETURN AIR COMBINATIONS OF 1, 2, AND 3
5 TONS AND GREATER *	YES	NO	NO	NO
ALL OTHER MODELS	YES	YES	YES	YES

*** 2000 CFM AND GREATER AT .6 ESP HI COOLING SPEED**

Upflow and Horizontal Furnaces

Connect supply−air duct to flanges on furnace supply−air outlet. Bend flange upward to 90° with wide duct pliers. (See Figure 14) The supply−air duct must be connected to ONLY the furnace supply−outlet−air duct flanges or air conditioning coil casing (when used). DO NOT cut main furnace casing side to attach supply air duct, humidifier, or other accessories. All accessories MUST be connected to duct external to furnace main casing.

NOTE: For horizontal applications, the top−most flange may be bent past 90° to allow the evaporator coil to hang on the flange temporarily while the remaining attachment and sealing of the coil are performed.

Downflow Furnaces

Connect supply−air duct to supply−air outlet on furnace. Bend flange inward past 90° with wide duct pliers. (See Figure 14) The supply−air duct must be connected to ONLY the furnace supply−outlet or air conditioning coil casing (when used). When installed on combustible material, supply−air duct must be connected to ONLY the accessory subbase or a factory approved air conditioning coil casing. DO NOT cut main furnace casing to attach supply side air duct, humidifier, or other accessories. All accessories MUST be connected to duct external to furnace casing.

⚠ WARNING

FIRE HAZARD

A failure to follow this warning could result in personal injury, or death and/or property damage.

Never connect return−air ducts to the back of the furnace. Follow instructions below.

Return Air Connections

Downflow Furnaces

The return−air duct must be connected to return−air opening (bottom inlet) as shown in Figure 19. DO NOT cut into casing sides (left or right). Side opening is permitted for only upflow and most horizontal furnaces. (See Figure 19) Bypass humidifier connections should be made at ductwork or coil casing sides exterior to furnace.

Upflow and Horizontal Furnaces

The return−air duct must be connected to bottom, sides (left or right), or a combination of bottom and side(s) of main furnace casing as shown in Figure 18 and Figure 20. Bypass humidifier may be attached into unused return air side of the furnace casing. (See Figure 18 and Figure 20)

Not all horizontal furnaces are approved for side return air connections. (See Figure 20)

GAS PIPING

⚠ WARNING

FIRE OR EXPLOSION HAZARD

Failure to follow this warning could result in personal injury, death, and/or property damage.

Never purge a gas line into a combustion chamber. Never test for gas leaks with an open flame. Use a commercially available soap solution made specifically for the detection of leaks to check all connections. A fire or explosion may result causing property damage, personal injury or loss of life.

⚠ WARNING

FIRE OR EXPLOSION HAZARD

Failure to follow this warning could result in personal injury, death, and/or property damage.

Use proper length of pipe to avoid stress on gas control manifold and a gas leak.

Gas piping must be installed in accordance with national and local codes. Refer to current edition of NFGC.

Installations must be made in accordance with all authorities having jurisdiction. If possible, the gas supply line should be a separate line running directly from meter to furnace.

NOTE: In the state of Massachusetts:

1. Gas supply connections MUST be performed by a licensed plumber or gas fitter.
2. When flexible connectors are used, the maximum length shall not exceed 36 inches (915 mm).
3. When lever handle type manual equipment shutoff valves are used, they shall be T−handle valves.
4. The use of copper tubing for gas piping is NOT approved by the state of Massachusetts.

Refer to Table 6 for recommended gas pipe sizing. Risers must be used to connect to furnace and to meter. Support all gas piping with appropriate straps, hangers, etc. Use a minimum of 1 hanger every 6 ft. (1.8 M) Joint compound (pipe dope) should be applied sparingly and only to male threads of joints. Pipe dope must be resistant to the action of propane gas.

Table 6—Maximum Capacity of Pipe

NOMINAL IRON PIPE SIZE IN. (MM)	INTERNAL DIA. IN. (MM)	LENGTH OF PIPE – FT (M)				
		10 (3.0)	20 (6.0)	30 (9.1)	40 (12.1)	50 (15.2)
1/2 (12.7)	0.622 (158)	175	120	97	82	73
3/4 (19.0)	0.824 (20.9)	360	250	200	170	151
1(25.4)	1.049 (26.6)	680	465	375	320	285
1-1/4 (31.8)	1.380 (35.0)	1400	950	770	660	580
1-1/2 (38.1)	1.610 (40.9)	2100	1460	1180	990	900

* Cubic ft. of natural gas per hr for gas pressures of 0.5 psig (14−in. w.c.) or less and a pressure drop of 0.5−in. w.c. (based on a 0.60 specific gravity gas). Ref: Table 6 and ANSI Z223−2012/NFPA 54−2012.

⚠ WARNING

FIRE OR EXPLOSION HAZARD

Failure to follow this warning could result in personal injury, death, and/or property damage.

If local codes allow the use of a flexible gas appliance connector, always use a new listed connector. Do not use a connector which has previously served another gas appliance. Black iron pipe shall be installed at the furnace gas control valve and extend a minimum of 2 in. (51 mm) outside the furnace.

⚠ CAUTION

FURNACE OVERHEAT HAZARD

Failure to follow this caution may result in unit component damage.

Connect gas pipe to gas valve using a backup wrench to avoid damaging gas controls and burner misalignment.

An accessible manual equipment shutoff valve MUST be installed external to furnace casing and within 6 ft. (1.8 M) of furnace. A 1/8−in. (3 mm) NPT plugged tapping, accessible for test gauge connection, MUST be installed immediately upstream of gas supply connection to furnace and downstream of manual equipment shutoff valve.

NOTE: The furnace gas valve inlet pressure tap connection is suitable to use as test gauge connection providing test pressure DOES NOT exceed maximum 0.5 psig (14−in. w.c.) stated on gas control valve. (See Figure 41)

Figure 21 — Burner and Manifold

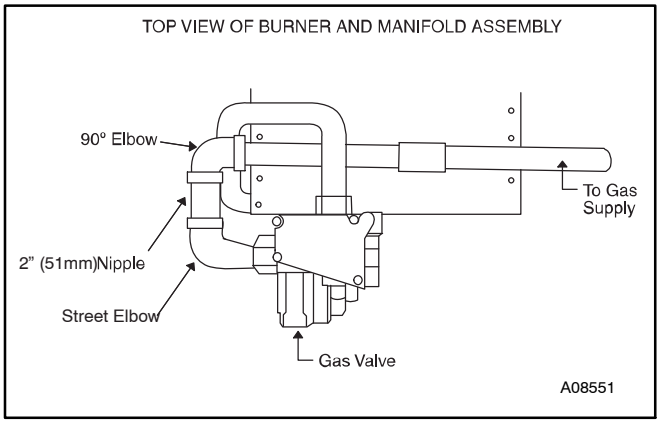

Figure 22 — Typical Gas Pipe Arrangement

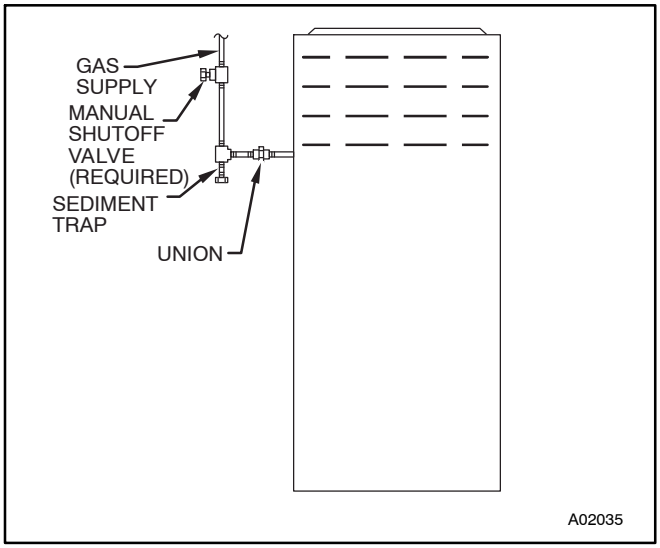

Some installations require gas entry on right side of furnace (as viewed in upflow.) (See Figure 21)

Install a sediment trap in riser leading to furnace as shown in Figure 22. Connect a capped nipple into lower end of tee. Capped nipple should extend below level of furnace gas controls. Place a ground joint union between furnace gas control valve and exterior manual equipment gas shutoff valve. A 1/8−in. (3 mm) NPT plugged tapping, accessible for test gauge connection, MUST be installed immediately upstream of gas supply connection to furnace and downstream of manual equipment shutoff valve.

Piping should be pressure and leak tested in accordance with NFGC, local, and national plumbing and gas codes before the furnace has been connected. After all connections have been made, purge lines and check for leakage at furnace prior to operating furnace.

If pressure exceeds 0.5 psig (14−in. w.c.), gas supply pipe must be disconnected from furnace and capped before and during supply pipe pressure test. If test pressure is equal to or less than 0.5 psig (14−in. w.c.), turn off electric shutoff switch located on furnace gas control valve and accessible manual equipment shutoff valve before and during supply pipe pressure test. After all connections have been made, purge lines and check for leakage at furnace prior to operating furnace.

Figure 23 — Relocating J−Box

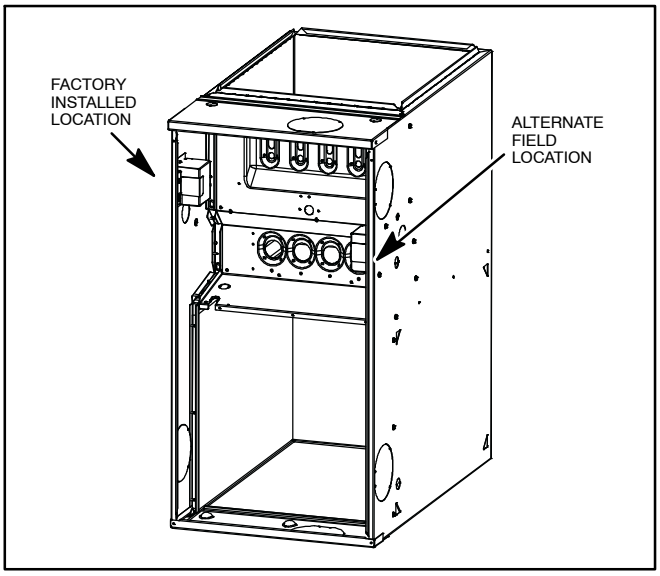

Figure 24 — Field−Supplied Electrical Box on Furnace Casing

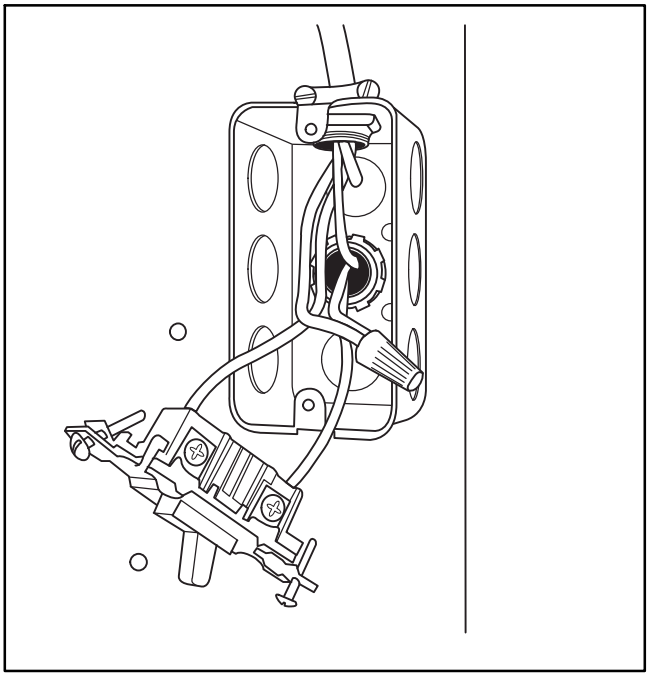

The gas supply pressure shall be within the maximum and minimum inlet supply pressures marked on the rating plate with the furnace burners ON and OFF.

ELECTRICAL CONNECTIONS

WARNING

ELECTRICAL SHOCK, FIRE OR EXPLOSION HAZARD

Failure to follow safety warnings could result in dangerous operation, serious injury, death or property damage.

Improper servicing could result in dangerous operation, serious injury, death or property damage.

- Before servicing, disconnect all electrical power to furnace.
- When servicing controls, label all wires prior to disconnecting. Reconnect wires correctly.
- Verify proper operation after servicing.

WARNING

ELECTRICAL SHOCK HAZARD

Failure to follow this warning could result in personal injury or death.

Blower access panel door switch opens 115−v power to control. No component operation can occur. Do not bypass or close switch with panel removed.

See Figure 26 for field wiring diagram showing typical field 115−v wiring. Check all factory and field electrical connections for tightness.

WARNING

ELECTRICAL SHOCK AND FIRE HAZARD

Failure to follow this warning could result in personal injury, death, or property damage.

The cabinet MUST have an uninterrupted or unbroken ground according to NEC NFPA 70−2011 or local codes to minimize personal injury if an electrical fault should occur. This may consist of electrical wire, conduit approved for electrical ground or a listed, grounded power cord (where permitted by local code) when installed in accordance with existing electrical codes. Refer to the power cord manufacturer's ratings for proper wire gauge. Do not use gas piping as an electrical ground.

CAUTION

FURNACE MAY NOT OPERATE

Failure to follow this caution may result in intermittent furnace operation.

Furnace control must be grounded for proper operation or else control will lock out. Control must remain grounded through green/yellow wire routed to gas valve and manifold bracket screw.

115−V WIRING

Verify that the voltage, frequency, and phase correspond to that specified on unit rating plate. Also, check to be sure that service provided by utility is sufficient to handle load imposed by this equipment. Refer to rating plate or Table 7 for equipment electrical specifications.

Make all electrical connections in accordance with National Electrical Code (NEC) NFPA 70−2011 and any local codes or ordinances that might apply.

WARNING

FIRE HAZARD

Failure to follow this warning could result in personal injury, death, or property damage.

Do not connect aluminum wire between disconnect switch and furnace. Use only copper wire.

Use a separate, fused branch electrical circuit with a properly sized fuse or circuit breaker for this furnace. See Table 7 for wire size and fuse specifications. A readily accessible means of electrical disconnect must be located within sight of the furnace.

NOTE: Proper polarity must be maintained for 115−v wiring. If polarity is incorrect, control LED status indicator light will flash a status code 10 and furnace will NOT operate.

J−BOX RELOCATION

NOTE: If factory location of J−Box is acceptable, go to next section (ELECTRICAL CONNECTION TO J−BOX).

NOTE: On 14−in. (356 mm) wide casing models, the J−Box shall not be relocated to other side of furnace casing when the vent pipe is routed within the casing.

1. Remove and save two screws holding J−Box. (See Figure 23)

NOTE: The J−Box cover need not be removed from the J−Box in order to move the J−Box. Do NOT remove green ground screw inside J−Box. The ground screw is not threaded into the casing flange and can be lifted out of the clearance hole in casing while swinging the front edge of the J−Box outboard of the casing.

2. Cut wire tie on loop in furnace wires attached to J−box.
3. Move J−Box to desired location.
4. Fasten J−Box to casing with two screws removed in Step 1.
5. Route J−Box wires within furnace away from sharp edges, rotating parts and hot surfaces.

ELECTRICAL CONNECTION TO J−BOX

Field−Supplied Electrical Box on Furnace J−Box Bracket See Figure 24.

1. Remove cover from furnace J−Box.
2. Attach electrical box to furnace J−Box bracket with at least two field−supplied screws through holes in electrical box into holes in bracket. Use blunt−nose screws that will not pierce wire insulation.
3. Route furnace power wires through holes in electrical box and J−Box bracket, and make field−wire connections in electrical box. Use best practices (NEC in U.S.) for wire bushings, strain relief, etc.
4. Route and secure field ground wire to green ground screw on J−Box bracket.
5. Connect line voltage leads as shown in Figure 26.

6. Reinstall cover to J−Box. Do not pinch wires between cover and bracket. Electrical Box on Furnace Casing Side See Figure 24.

⚠ WARNING

FIRE OR ELECTRICAL SHOCK HAZARD

Failure to follow this warning could result in personal injury, death, or property damage.

If field−supplied manual disconnect switch is to be mounted on furnace casing side, select a location where a drill or fastener cannot damage electrical or gas components.

1. Select and remove a hole knockout in the casing where the electrical box is to be installed.

NOTE: Check that duct on side of furnace will not interfere with installed electrical box.

2. Remove the desired electrical box hole knockout and position the hole in the electrical box over the hole in the furnace casing.
3. Fasten the electrical box to casing by driving two field supplied screws from inside electrical box into casing steel.
4. Remove and save two screws holding J−Box. (See Figure 23)
5. Pull furnace power wires out of 1/2−in. (12 mm) diameter hole in J−Box. Do not loosen wires from strain−relief wire−tie on outside of J−Box.
6. Route furnace power wires through holes in casing and electrical box and into electrical box.
7. Pull field power wires into electrical box.
8. Remove cover from furnace J−Box.
9. Route field ground wire through holes in electrical box and casing, and into furnace J−Box.
10. Reattach furnace J−Box to furnace casing with screws removed in Step 4.
11. Secure field ground wire to J−Box green ground screw.

Table 7—Electrical Data

FURNACE SIZE	VOLTS−HERTZ−PHASE	OPERATING VOLTAGE RANGE		MAXIMUM UNIT AMPS	UNIT AMPACITY #	MAXIMUM WIRE LENGTH FT. (M)‡	MAXIMUM FUSE OR CKT BKR AMPS†	MINIMUM WIRE GAUGE
		Maximum*	Minimum*					
0451408A	115−60−1	127	104	5.2	7.26	49 (15)	15	14
0451412A	115−60−1	127	104	7.2	9.79	37 (12)	15	14
0701408A	115−60−1	127	104	5.1	7.14	51 (16)	15	14
0701412A	115−60−1	127	104	7.2	9.72	38 (12)	15	14
0701716A	115−60−1	127	104	9.5	12.60	29 (9)	15	14
0901714B	115−60−1	127	104	8.2	10.83	34 (10)	15	14
0902116A	115−60−1	127	104	10.0	13.09	28 (9)	15	14
0902120A	115−60−1	127	104	14.1	18.20	31 (9)	20	12
1101712A	115−60−1	127	104	8.6	11.27	32 (10)	15	14
1102116A	115−60−1	127	104	10.2	13.34	27 (9)	15	14
1102122A	115−60−1	127	104	15.1	19.42	29 (8)	20	12
1352116A	115−60−1	127	104	10.5	13.63	27 (8)	15	14
1352422A	115−60−1	127	104	14.5	18.72	30 (9)	20	12
1552420A	115−60−1	127	104	15.4	19.83	29 (9)	20	12

* Permissible limits of the voltage range at which the unit operates satisfactorily.
\# Unit ampacity = 125 percent of largest operating component's full load amps plus 100 percent of all other potential operating components' (EAC, humidifier, etc.) full load amps.
† Time−delay type is recommended.
‡ Length shown is as measured 1 way along wire path between unit and service panel for maximum 2 percent voltage drop.

12. Complete electrical box wiring and installation. Connect line voltage leads as shown in Figure 26. Use best practices (NEC) for wire bushings, strain relief, etc.
13. Reinstall cover to J−Box. Do not pinch wires between cover and bracket.

POWER CORD INSTALLATION IN FURNACE J−BOX

NOTE: Power cords must be able to handle the electrical requirements listed in Table 7. Refer to power cord manufacturer's listings.

1. Remove cover from J−Box.
2. Route listed power cord through 7/8−in. (22 mm) diameter hole in J−Box.
3. Secure power cord to J−Box bracket with a strain relief bushing or a connector approved for the type of cord used.
4. Secure field ground wire to green ground screw on J−Box bracket.
5. Connect line voltage leads as shown in Figure 26.
6. Reinstall cover to J−Box. Do not pinch wires between cover and bracket.

BX CABLE INSTALLATION IN FURNACE J−BOX

1. Remove cover from J−Box.
2. Route BX cable into 7/8−inch (22 mm) diameter hole in J−Box.
3. Secure BX cable to J−Box bracket with connectors approved for the type of cable used.
4. Secure field ground wire to green ground screw on J−Box bracket.
5. Connect line voltage leads as shown in Figure 26.
6. Reinstall cover to J−Box. Do not pinch wires between cover and bracket.

Figure 25 — Furnace Control

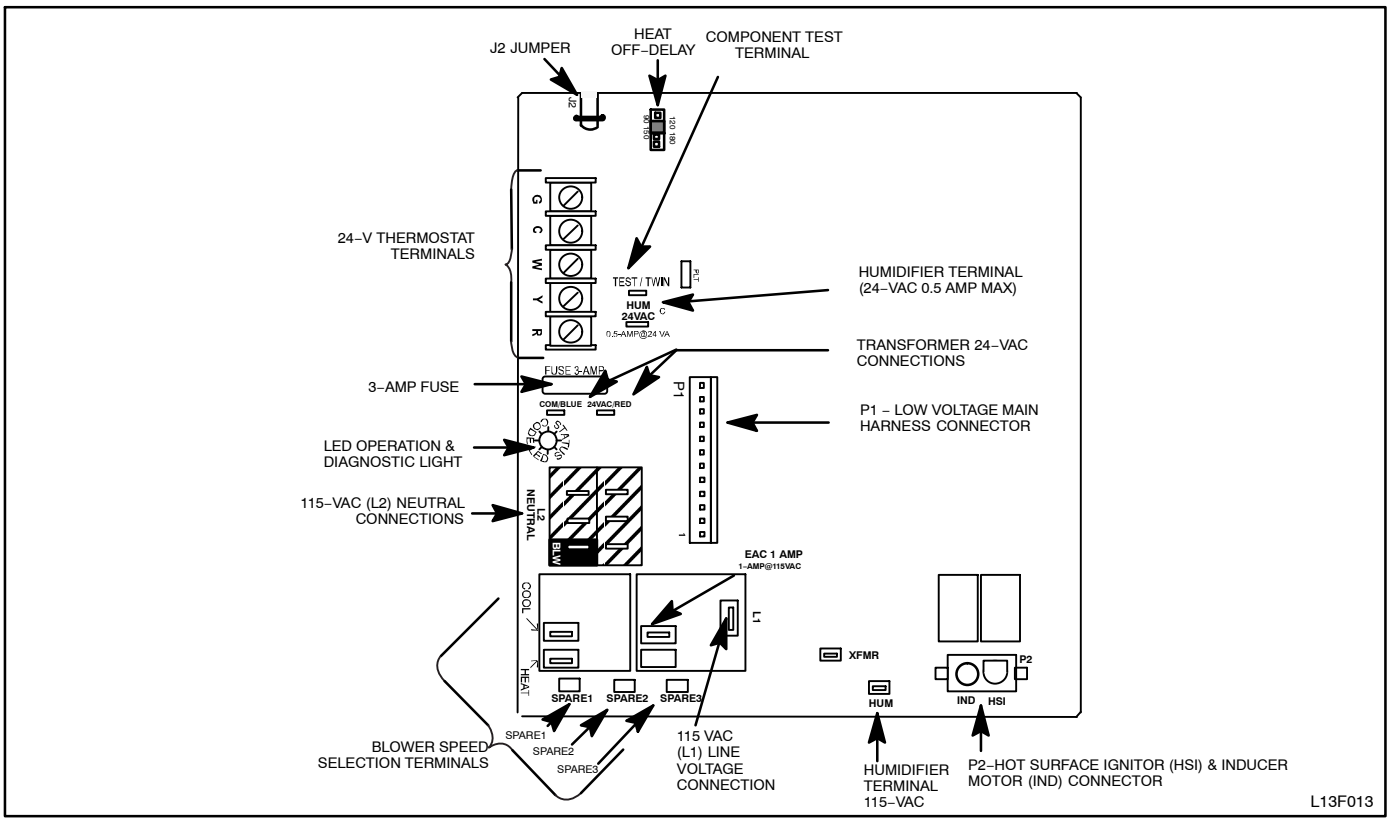

Figure 26 — Heating and Cooling Application Wiring Diagram with Single Stage Thermostat

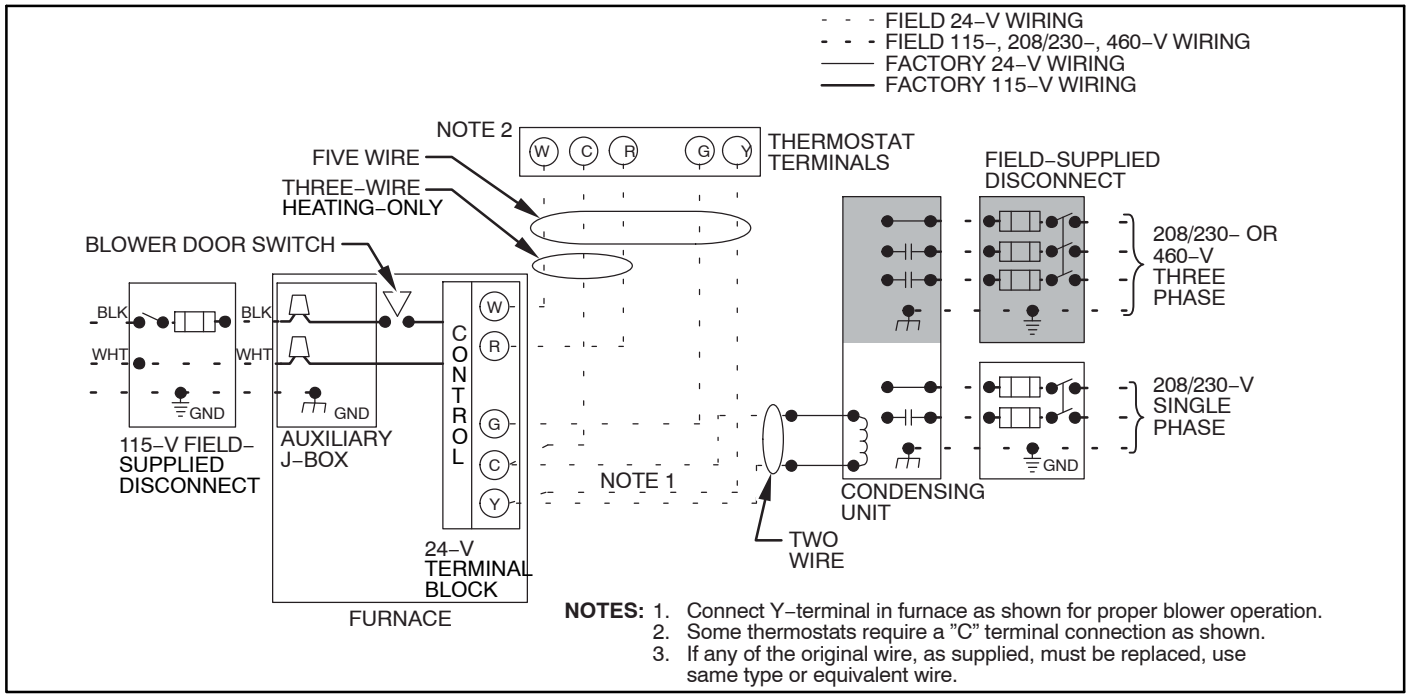

24−V WIRING

Make field 24−v connections at the 24−v terminal strip. (See Figure 25) Connect terminal Y as shown in Figure 26 for proper cooling operation. Use only AWG No. 18, color−coded, copper thermostat wire.

The 24−v circuit contains an automotive−type, 3−amp. fuse located on the control. Any direct shorts during installation,

service, or maintenance could cause this fuse to blow. If fuse replacement is required, use ONLY a 3−amp. fuse of identical size.

ACCESSORIES

1. Electronic Air Cleaner (EAC):
   Connect an accessory Electronic Air Cleaner (if used) using 1/4−in female quick connect terminals to the two male 1/4−in quick−connect terminals on the control board marked EAC 1 AMP and NEUTRAL. The terminals are rated for 115 VAC, 1.0 amps maximum and are energized during blower motor operation. (See Figure 24)
2. Humidifier (HUM 24VAC and HUM)
   a. HUM 24VAC: Connect an accessory 24 VAC, 0.5 amp maximum humidifier (if used) to the 1/4−in male quick−connect HUM 24VAC terminal and C screw terminal on the control board thermostat strip. The HUM 24VAC terminal is energized when there is a call for heat (W) and the pressure switch (PRS) closes. (See Figure 24 and Figure 48).
   b. HUM: Connect an accessory 115VAC (EAC and HUM are 1 amp maximum combined) humidifier (if used) to the ¼−inch male quick connect HUM terminal and NEUTRAL ¼−inch quick connect. The HUM terminal is energized when the inducer motor is energized (IDR). (See Figure 24 and Figure 48).

NOTE: A field−supplied, 115−v controlled relay connected to EAC terminals may be added if humidifier operation is desired during blower operation.

NOTE: DO NOT connect furnace control HUM 24VAC terminal to H (humidifier) terminal on humidity sensing thermostat, or similar device. See humidity sensing thermostat, thermostat, or controller manufacturer's instructions for proper connection.

VENTING

The furnace shall be connected to a listed factory built chimney or vent, or a clay−tile lined masonry or concrete chimney. Venting into an unlined masonry chimney or concrete chimney is prohibited.

When an existing Category I furnace is removed or replaced, the original venting system may no longer be sized to properly vent the attached appliances. An improperly sized Category I venting system could cause the formation of condensate in the furnace and vent, leakage of condensate and combustion products, and spillage of combustion products into the living space.

Vent system or vent connectors may need to be resized. Vent systems or vent connectors, must be sized to approach minimum size as determined using appropriate table found in the NFGC.

GENERAL VENTING REQUIREMENTS

Follow all safety codes for proper vent sizing and installation requirements, including local building codes, the National Fuel Gas Code ANSI Z223.1−2012/NFPA 54−2012 (NFGC), Parts 12 and 13, local building codes, and furnace and vent manufacturers' instructions.

⚠ WARNING

CARBON MONOXIDE POISONING HAZARD

Failure to follow the steps outlined below for each appliance connected to the venting system being placed into operation could result in carbon monoxide poisoning or death.

The following steps shall be followed for each appliance connected to the venting system being placed into operation, while all other appliances connected to the venting system are not in operation:

1. Seal any unused openings in venting system.
2. Inspect the venting system for proper size and horizontal pitch, as required in the National Fuel Gas Code, ANSI Z223.1/NFPA 54 and these instructions. Determine that there is no blockage or restriction, leakage, corrosion and other deficiencies, which could cause an unsafe condition.
3. As far as practical, close all building doors and windows and all doors between the space in which the appliance(s) connected to the venting system are located and other spaces of the building.
4. Close fireplace dampers.
5. Turn on clothes dryers and any appliance not connected to the venting system. Turn on any exhaust fans, such as range hoods and bathroom exhausts, so they are operating at maximum speed. Do not operate a summer exhaust fan.
6. Follow the lighting instructions. Place the appliance being inspected into operation. Adjust the thermostat so appliance is operating continuously.
7. Test for spillage from draft hood equipped appliances at the draft hood relief opening after 5 minutes of main burner operation. Use the flame of a match or candle.
8. If improper venting is observed during any of the above tests, the venting system must be corrected in accordance with the National Fuel Gas Code, ANSI Z223.1/NFPA 54 .
9. After it has been determined that each appliance connected to the venting system properly vents when tested as outlined above, return doors, windows, exhaust fans, fireplace dampers and any other gas−fired burning appliance to their previous conditions of use.

These furnaces are design−certified as Category I furnaces in accordance with ANSI Z21.47−2012/CSA 2.3−2012 and operate with a non−positive vent static pressure to minimize the potential for vent gas leakage. Category I furnaces operate with a flue loss not less than 17 percent to minimize the potential for condensation in the venting system. These furnaces are approved for common venting and multistory venting with other fan assisted or draft hood equipped appliances in accordance with the NFGC, the local building codes, and furnace and vent manufacturers' instructions.

The following information and warning must be considered in addition to the requirements defined in the NFGC.

⚠ WARNING

CARBON MONOXIDE POISONING HAZARD

Failure to follow this warning could result in personal injury or death.

Do not bypass the draft safeguard switch, as an unsafe condition could exist which must be corrected.

1. If a vent (common or dedicated) becomes blocked, the furnace will be shut off by the draft safeguard switch located on the vent elbow.
2. Do not connect this Category I furnace into a single−wall dedicated or common vent. The dedicated or common vent is considered to be the vertical portion of the vent system that terminates outdoors.
3. Vent connectors serving Category I furnaces shall not be connected into any portion of a mechanical draft system operating under positive pressure.
4. Do not vent this appliance with any solid fuel burning appliance.
5. Category I furnaces must be vented vertically or nearly vertically unless equipped with a listed power venter.
6. Do not vent this appliance into an unlined masonry chimney. Refer to Chimney Inspection Chart.

MASONRY CHIMNEY REQUIREMENTS

NOTE: These furnaces are CSA design−certified for use in exterior clay tile−lined masonry chimneys with a factory accessory Chimney Adapter Kit. Refer to the furnace rating plate for correct kit usage. The Chimney Adapter Kits are for use with ONLY furnaces having a Chimney Adapter Kit numbers marked on the furnace rating plate.

If a clay tile−lined masonry chimney is being used and it is exposed to the outdoors below the roof line, relining might be required. Chimneys shall conform to the Standard for Chimneys, Fireplaces, Vents, and Solid Fuel Burning Appliances ANSI/NFPA 211−2012 and must be in good condition.

U.S.A.−Refer to NFPA 54/ANSI Z223.1−2012 Sections 13.1.8 and 13.2.20 of the NFGC or the authority having jurisdiction to determine whether relining is required. If relining is required, use a properly sized listed metal liner, Type−B vent, or a listed alternative venting design.

NOTE: See the NFPA 54 / ANSI Z223.1−2012, 13.1.8 and 13.2.20 regarding alternative venting design and the Exception, which cover installations such as the Chimney Adapter Kits, which are listed for use with these furnaces. The Chimney Adapter Kit is listed alternative venting system for these furnaces. See the kit instructions for complete details.

This furnace is permitted to be vented into a clay tile−lined masonry chimney that is exposed to the outdoors below the roof line, provided:

1. Vent connector is Type−B double−wall, and
2. This furnace is common vented with at least 1 draft hood equipped appliance, and
3. The combined appliance input rating is less than the maximum capacity given in Table 8 , and
4. The input rating of each space heating appliance is greater than the minimum input rating given in Table 9 for the local 99% Winter Design Temperature. Chimneys having internal areas greater than 38 in^2 (24516 mm^2) require furnace input ratings greater than the input ratings of these furnaces. See footnote at bottom of Table 9, and
5. The authority having jurisdiction approves.

If all of these conditions cannot be met, an alternative venting design shall be used, such as the listed chimney adapter kit with these furnaces, which are listed for use with the kit, a listed chimney−lining system, or a Type−B common vent.

Inspections before the sale and at the time of installation will determine the acceptability of the chimney or the need for repair and/or (re)lining. Refer to the Chimney Inspection Chart to perform a chimney inspection. If the inspection of a previously used tile−lined chimney:

a. Shows signs of vent gas condensation, the chimney should be relined in accordance with local codes and the authority having jurisdiction. The chimney should be relined with a listed metal liner, Type−B vent, or a listed chimney adapter kit shall be used to reduce condensation. If a condensate drain is required by local code, refer to the NFPA 54 / ANSI Z223.1−2012, Section 12.10 for additional information on condensate drains.
b. Indicates the chimney exceeds the maximum permissible size in the tables, the chimney should be rebuilt or relined to conform to the requirements of

the equipment being installed and the authority having jurisdiction.

A chimney without a clay tile liner, which is otherwise in good condition, shall be rebuilt to conform to ANSI/NFPA 211 or be lined with a UL listed metal liner or UL listed Type−B vent. Relining with a listed metal liner or Type−B vent is considered to be a vent−in−a−chase.

If a metal liner or Type−B vent is used to line a chimney, no other appliance shall be vented into the annular space between the chimney and the metal liner.

Figure 27 — Chimney Inspection Chart

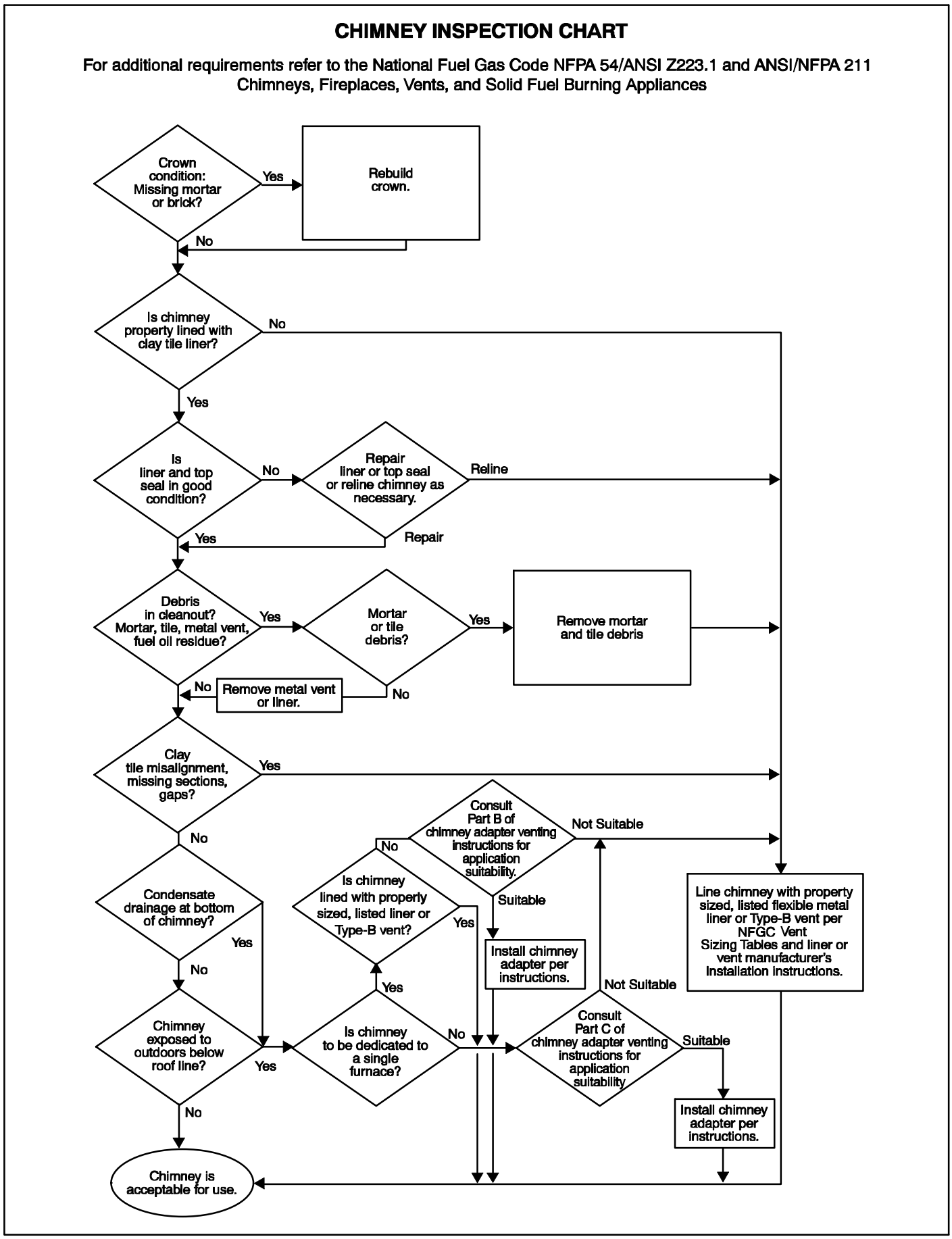

A10133

APPLIANCE APPLICATION REQUIREMENTS

Appliance operation has a significant impact on the performance of the venting system. If the appliances are sized, installed, adjusted, and operated properly, the venting system and/or the appliances should not suffer from condensation and corrosion. The venting system and all appliances shall be installed in accordance with applicable listings, standards, and codes.

The furnace should be sized to provide 100 percent of the design heating load requirement plus any margin that occurs because of furnace model size capacity increments. Heating load estimates can be made using approved methods available from Air Conditioning Contractors of America (Manual J); American Society of Heating, Refrigerating, and Air−Conditioning Engineers; or other approved engineering methods. Excessive oversizing of the furnace could cause the furnace and/or vent to fail prematurely.

When a metal vent or metal liner is used, the vent must be in good condition and be installed in accordance with the vent manufacturer's instructions.

To prevent condensation in the furnace and vent system, the following precautions must be observed:

1. The return−air temperature must be at least 60°F (16°C) db except for brief periods of time during warm−up from setback at no lower than 55°F (13°C) db or during initial start−up from a standby condition.
2. Adjust the gas input rate per the installation instructions. Low gas input rate causes low vent gas temperatures, causing condensation and corrosion in the furnace and/or venting system. Derating is permitted only for altitudes above 2000 ft. (610 M).
3. Adjust the air temperature rise to the midpoint of the rise range or slightly above. Low air temperature rise can cause low vent gas temperature and potential for condensation problems.
4. Set thermostat heat anticipator or cycle rate to reduce short cycling.

Table 8— EXTERIOR MASONRY CHIMNEY FAN + NAT INSTALLATIONS WITH TYPE−B DOUBLE WALL VENT CONNECTORS ©NFPA & AGA Combined Appliance Maximum Input Rating in Thousands of Btuh per Hour

VENT HEIGHT FT. (M)	INTERNAL AREA OF CHIMNEY SQ. IN. (SQ. MM)			
	12 (7741)	19 (12258)	28 (18064)	38 (24516)
6 (1.8)	74	119	178	257
8 (2.4)	80	130	193	279
10 (3.0)	84	138	207	299
15 (4.5)	NR	152	233	334
20 (6.0)	NR	NR	250	368
30 (9.1)	NR	NR	NR	404

Table 9—Minimum Allowable Input Rating of Space−Heating Appliance in Thousands of Btuh per Hour

VENT HEIGHT FT. (M)	INTERNAL AREA OF CHIMNEY SQ. IN. (SQ. MM)			
	12 (7741)	19 (12258)	28 18064)	38 (24516)
Local 99% Winter Design Temperature: 17 to 26 degrees F				
6	0	55	99	141
8	52	74	111	154
10	NR	90	125	169
15	NR	NR	167	212
20	NR	NR	212	258
30	NR	NR	NR	362
Local 99% Winter Design Temperature: 5 to 16 degrees F*				
6	NR	78	121	166
8	NR	94	135	182
10	NR	111	149	198
15	NR	NR	193	247
20	NR	NR	NR	293
30	NR	NR	NR	377
Local 99% Winter Design Temperature: −10 to 4 degrees F*				
6	NR	NR	145	196
8	NR	NR	159	213
10	NR	NR	175	231
15	NR	NR	NR	283
20	NR	NR	NR	333
30	NR	NR	NR	NR
Local 99% Winter Design Temperature: −11°F (16°C) or lower				
Not recommended for any vent configuration.				

*The 99.6% heating db temperatures found in the 1997 or 2001 ASHRAE Fundamentals Handbook, Climatic Design Information chapter, Table 1A (United States) and 2A (Canada) or the 2005 ASHRAE Fundamentals handbook, Climatic Design Information chapter, and the CD−ROM included with the 2005 ASHRAE Fundamentals Handbook.

Air for combustion must not be contaminated by halogen compounds which include chlorides, fluorides, bromides, and iodides. These compounds are found in many common home products such as detergent, paint, glue, aerosol spray, bleach, cleaning solvent, salt, and air freshener, and can cause corrosion of furnaces and vents. Avoid using such products in the combustion−air supply. Furnace use during construction of the building could cause the furnace to be exposed to halogen compounds, causing premature failure of the furnace or venting system due to corrosion.

Vent dampers on any appliance connected to the common vent can cause condensation and corrosion in the venting system. Do not use vent dampers on appliances common vented with this furnace.

ADDITIONAL VENTING REQUIREMENTS

A 4−in. (102 mm) round vent elbow is supplied with the furnace. A 5−in. (127 mm) or 6−in. (152 mm) vent connector may be required for some model furnaces. A field−supplied 4−in. (102 mm) to 5−in. (127 mm) or 4−in. (102 mm) to 6−in. (152 mm) sheet metal increaser fitting is required when 5−in. (127 mm) or 6−in. (152 mm) vent connector is used. See Figure 28 − Figure 40 Venting Orientation for approved vent configurations.

NOTE: Vent connector length for connector sizing starts at furnace vent elbow. The 4−in. (102 mm) vent elbow is shipped for upflow configuration and may be rotated for other positions. Remove the 3 screws that secure vent elbow to furnace, rotate furnace vent elbow to position desired, reinstall screws. The factory−supplied vent elbow does NOT count as part of the number of vent connector elbows.

The vent connector can exit the cabinet of the furnace through one of five locations.

1. Attach the single wall vent connector to the furnace vent elbow, and fasten the vent connector to the vent elbow with at least two field−supplied, corrosion−resistant, sheet metal screws located 180° apart.

NOTE: A flue extension is recommended to extend from the furnace elbow to outside the furnace casing. If flue extension is used, fasten the flue extension to the vent elbow with at least two field−supplied, corrosion−resistant, sheet metal screws located 180° apart. Fasten the vent connector to the flue extension with at least two field−supplied, corrosion resistant sheet metal screws located 180° apart.

2. Vent the furnace with the appropriate connector as shown in Figure 28 − Figure 40.

⚠ CAUTION

CUT HAZARD

Failure to follow this caution may result in personal injury. Sheet metal parts may have sharp edges or burrs.

Use care and wear appropriate protective clothing, safety glasses and gloves when handling parts and servicing furnaces.

3. Determine the correct location of the knockout to be removed.
4. Use a hammer and screwdriver to strike a sharp blow between the tie points and work the slug back and forth until the slug breaks free.

⚠ CAUTION

BURN HAZARD

Failure to follow this caution may cause personal injury.

Hot vent pipe is within reach of small children when installed in downflow position. See the following instruction.

An accessory Vent Guard Kit is REQUIRED for downflow applications for use where the vent exits through the lower portion of the furnace casing door. Refer to the Vent Guard Kit Instructions for complete details.

The horizontal portion of the venting system shall slope upwards not less than 1/4−in. (6 mm) per linear ft. (21 mm/m) from the furnace to the vent and shall be rigidly supported every 5 ft. (1.5 M) or less with metal hangers or straps to ensure there is no movement after installation.

SIDEWALL VENTING

This furnace is not approved for direct sidewall horizontal venting.

Per section 12.4.3 of the NFPA 54 / ANSI Z223.1−2012, any listed mechanical venter may be used, when approved by the authority having jurisdiction.

Caution!! for the following applications, use the minimum vertical vent heights as specified below.
For all other applications, follow exclusively the national fuel gas code.

Table 10—Minimum Vent Heights

FURNACE ORIENTATION	VENT ORIENTATION	FURNACE INPUT (BTUH/HR)	MINIMUM VENT DIAMETER IN. (mm)*	MINIMUM VERTICAL VENT HEIGHT FT. (M)**
Downflow	Vent Elbow left, then up Figure 32	154,000 132,000 110,000 (3 ton only)	5 (127)	12 (3.6)
Horizontal Left	Vent Elbow right, then up Figure 35	154,000 132,000	5 (127)	7 (2.2)
Horizontal Left	Vent Elbow up Figure 36	154,000 132,000	5 (127)	7 (2.2)
Horizontal Left	Vent Elbow up Figure 36	154,000	5 (127)	7 (2.2)
Downflow	Vent elbow up then left Figure 30	110,000 (3 ton only)	5 (127)	10 (3.0)
Downflow	Vent elbow up, then right Figure 33	110,000 (3 ton only)	5 (127)	10 (3.0)

* 4 in. (102 mm) inside casing or vent guard
** Including 4 in. (102 mm) vent section (s)
NOTE: All vent configurations must also meet National Fuel Gas Code (NFGC) venting requirements
NOTE: For all unlisted vent configurations, refer to National Fuel Gas Code (NFGC) venting requirements.

Figure 28 — Upflow Application–Vent Elbow Up

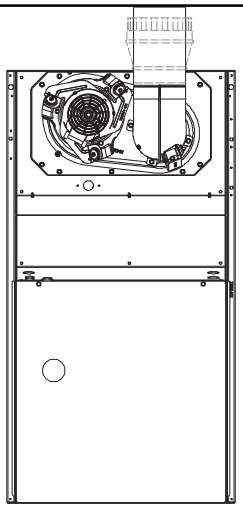

SEE NOTES: 1,2,4,7,8,9
on the page following
these figures

A03208

Figure 29 — Upflow Application–Vent Elbow Right

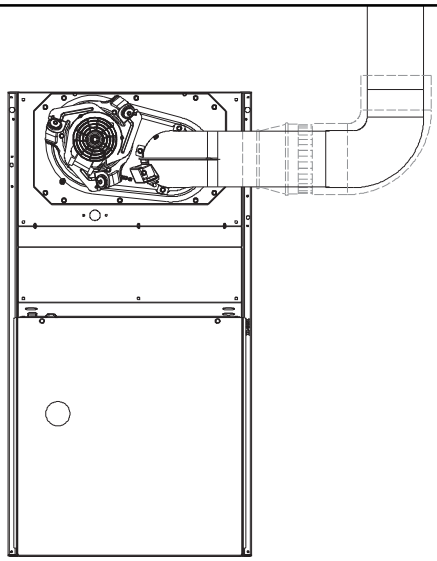

SEE NOTES: 1,2,3,4,7,8,9
on the pages following
these figures

A03209

Figure 30 — Downflow Application–Vent Elbow Up then Left

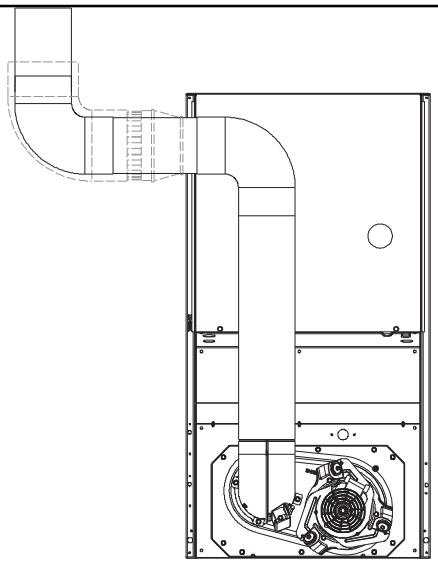

SEE NOTES:1,2,3,4,5,7,8,9
on the page following
these figures

A03210

Figure 31 — Downflow Application–Vent Elbow Up

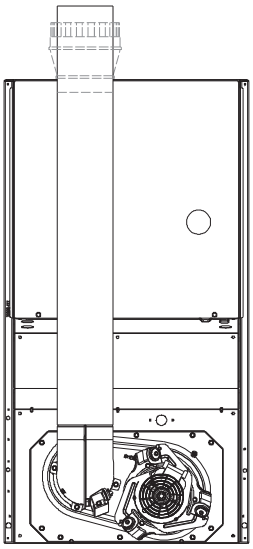

SEE NOTES: 1,2,4,5,7,8,9
on the page following
these figures

A03211

Figure 32 — Downflow Application−Vent Elbow Left then Up

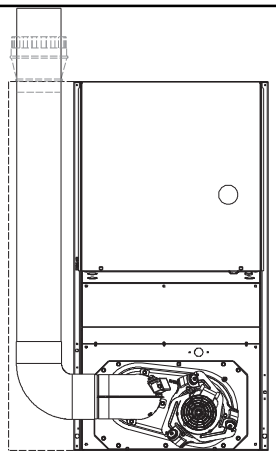

SEE NOTES: 1,2,4,5,6,7,8,9,10
on the page following these figures

A03207

Figure 33 — Downflow Application−Vent Elbow Up then Right

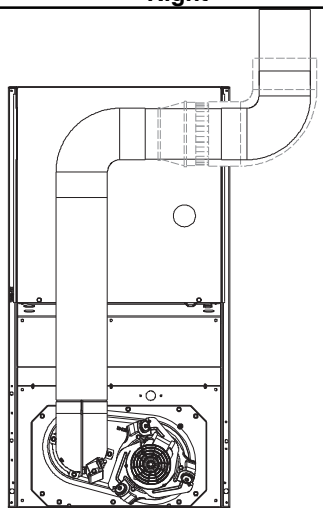

SEE NOTES:1,2,3,4,5,7,8,9
on the page following
these figures.

A03212

Figure 34 — Horizontal Left Application−Vent Elbow Left

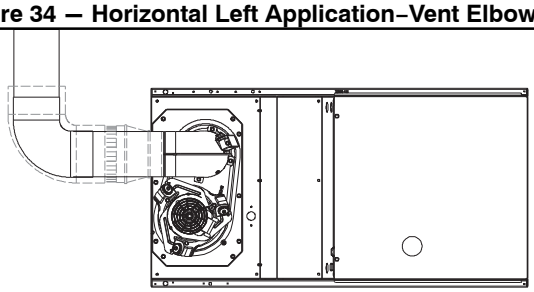

SEE NOTES: 1,2,4,7,8,9 on the page
following these figures

A03213

Figure 35 — Horizontal Left Application−Vent Elbow Right then Up

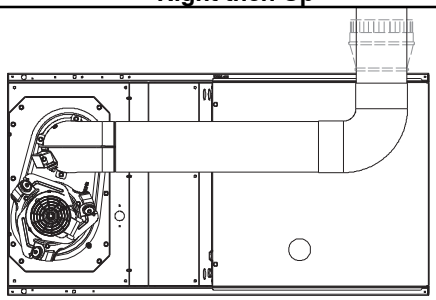

SEE NOTES: 1,2,4,5,7,8,9 on the page
following these figures

A03214

Figure 36 — Horizontal Left Application−Vent Elbow Up

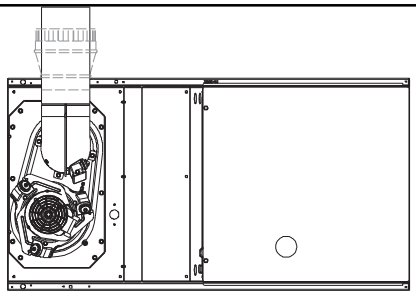

SEE NOTES: 1,2,4,5,7,8,9 on the page
following these figures

A03215

Figure 37 — Horizontal Left Application−Vent Elbow Right

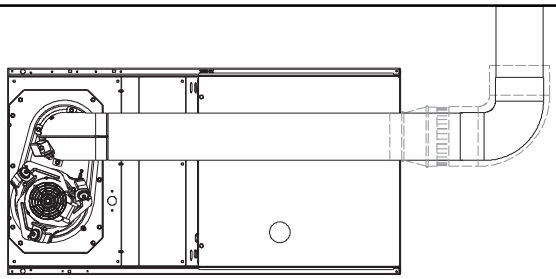

SEE NOTES: 1,2,4,5,7,8,9 on the page
following these figures

A03216

Figure 38 — Horizontal Right Application−Vent Elbow Right

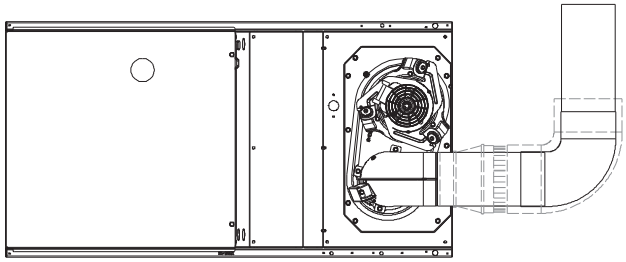

SEE NOTES: 1,2,4,7,8,9 on the page
following these figures

A03218

Figure 39 — Horizontal Right Application−Vent Elbow Left then Up

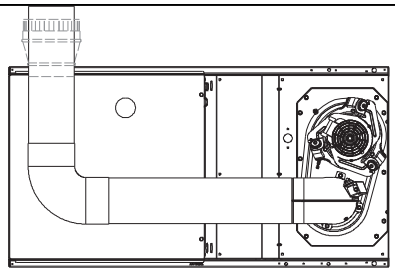

SEE NOTES: 1,2,4,5,7,8,9 on the page following these figures

A03219

Figure 40 — Horizontal Right Application−Vent Elbow Left

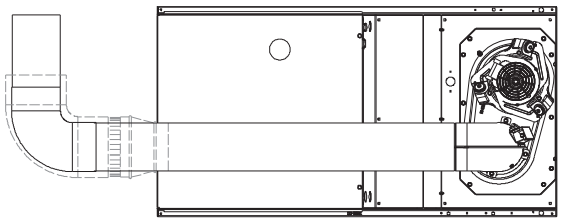

SEE NOTES: 1,2,4,5,7,8,9

A02068

Notes for Figure 33 − Figure 40

1. For common vent, vent connector sizing and vent material, use the NFGC.
2. Immediately increase to 5−in. (127 mm) or 6−in. (152 mm) vent connector outside furnace casing when 5−in. (127 mm) vent connector is required, refer to Note 1 above.
3. Side outlet vent for upflow and downflow installations must use Type B vent immediately after exiting the furnace, except when the Downflow Vent Guard Kit, is used in the downflow position
4. Type−B vent where required, refer to the Note 1 above.
5. A 4−in. (102 mm) single−wall (26 ga. minimum) vent must be used inside furnace casing and when the Downflow Vent Guard Kit is used external to the furnace.
6. Accessory Downflow Vent Guard Kit is required in downflow installations with lower vent configuration.
7. Chimney Adapter Kit may be required for exterior masonry chimney applications. Refer to Chimney Adapter Kit for sizing and complete application details.
8. Secure vent connector to furnace elbow with (2) corrosion−resistant sheet metal screws, spaced approximately 180° apart.
9. Secure all other single wall vent connector joints with (3) corrosion resistant screws spaced approximately 120° apart. Secure Type−B vent connectors per vent connector manufacturer's recommendations.

START−UP, ADJUSTMENT, AND SAFETY CHECK

Step 1 —General

⚠ WARNING

FIRE HAZARD

Failure to follow this warning could result in personal injury, death and/or property damage.

This furnace is equipped with manual reset limit switches in the gas control area. The switches open and shut off power to the gas valve if a flame rollout or overheating condition occurs in the gas control area. DO NOT bypass the switches. Correct inadequate combustion air supply problem before resetting the switches.

⚠ CAUTION

CUT HAZARD

Failure to follow this caution may result in personal injury. Sheet metal parts may have sharp edges or burrs.

Use care and wear appropriate protective clothing, safety glasses, and gloves when handling parts and servicing furnaces.

1. Maintain 115−v wiring and ground. Improper polarity will result in flashing a status code 10 and no furnace operation.
2. Make thermostat wire connections at the 24−v terminal block on the furnace control. Failure to make proper connections will result in improper operation. (See Figure 26)
3. Gas supply pressure to the furnace must be greater than 4.5−in. w.c. (0.16 psig) but not exceed 14−in. w.c. (0.5 psig).
4. Check all manual−reset switches for continuity.
5. Install blower compartment door. Door must be in place to operate furnace.
6. Replace outer door.

Step 2 —Start−Up Procedures

⚠ WARNING

FIRE OR EXPLOSION HAZARD

Failure to follow this warning could result in personal injury, death, and/or property damage.

Never purge a gas line into a combustion chamber. Never test for gas leaks with an open flame. Use a commercially available soap solution made specifically for the detection of leaks to check all connections. A fire or explosion may result causing property damage, personal injury or loss of life.

1. Purge gas lines after all connections have been made.
2. Check gas lines for leaks.

⚠ WARNING

ELECTRICAL SHOCK HAZARD

Failure to follow this warning could result in personal injury, or death.

Blower access door switch opens 115–v power to control. No component operation can occur unless switch is closed. Caution must be taken when manually closing this switch for service purposes.

3. To Begin Component Self–Test: Remove blower access door. Disconnect the thermostat R lead from the furnace control board. Manually close the blower door switch. Short (jumper) the C terminal on control to the TEST/TWIN 3/16–inch quick connect terminal on control until LED goes out (approximately 2 sec). Gas valve and humidifier will not be turned on. (See Figure 25)

NOTE: The furnace control allows all components, except the gas valve, to be run for short period of time. This feature helps diagnose a system problem in case of a component failure. Component test feature will not operate if any thermostat signal is present at the control.

Component test sequence is as follows:

Refer to service label attached to furnace or see Figure 44.

a. LED will display previous status code 4 times.

NOTE: If no previous code is present, go directly to b.

b. Inducer motor starts and continues to run until Step f of component test sequence.
c. Hot surface igniter is energized for 15 sec., then off.
d. Blower motor operates on HEAT speed for 10 sec.
e. Blower motor operates on COOL speed for 10 sec.
f. Inducer motor stops.
g. Reconnect R lead to furnace control board, release blower door switch and re–install blower door.

4. Operate furnace per instruction on door.
5. Verify furnace shut down by lowering thermostat setting below room temperature.
6. Verify furnace restarts by raising thermostat setting above room temperature.

Step 3 —Adjustments

Table 11—Altitude Derate Multiplier for U.S.A.

ALTITUDE FT. (M)	PERCENT OF DERATE	DERATE MULTIPLIER FACTOR*
0–2000 (0–610)	0	1.00
2001–3000 (610–914)	8–12	0.90
3001–4000 (914–1219)	12–16	0.86
4001–5000 (1219–1524)	16–20	0.82
5001–6000 1524–1829)	20–24	0.78
6001–7000 (1829–2134)	24–28	0.74
7001–8000 (2134–2438)	28–32	0.70
8001–9000 (2438–2743)	32–36	0.66
9001–10,000 (2743–3048)	36–40	0.62

* Derate multiplier factors are based on midpoint altitude for altitude range.

⚠ WARNING

FIRE HAZARD

Failure to follow this warning could result in injury, death and/or property damage.

DO NOT bottom out gas valve regulator adjusting screw. This can result in unregulated manifold pressure and result in excess overfire and heat exchanger failures.

⚠ CAUTION

FURNACE DAMAGE HAZARD

Failure to follow this caution may result in reduced furnace life.

DO NOT redrill orifices. Improper drilling (burrs, out–of round holes, etc.) can cause excessive burner noise and misdirection of burner flames. This can result in flame impingement of heat exchangers, causing failures. (See Figure 42)

Furnace gas input rate on rating plate is for installations at altitudes up to 2000 ft. (610 M). Furnace input rate must be within +/–2 percent of furnace rating plate input.

1. Determine the correct gas input rate.
   The input rating for altitudes above 2,000 ft. (610 M) must be reduced by 4 percent for each 1,000 ft. (305 M) above sea level. For installations below 2000 ft., refer to the unit rating plate. For installations above 2000 ft. (610 M), multiply the input on the rating plate by the derate multiplier in Table 11 for the correct input rate.
2. Determine the correct orifice and manifold pressure adjustment. There are two different orifice and manifold adjustment tables. All models in all positions, except Low NOx models in downflow or horizontal positions, use Table 15 (22,000 Btuh/Burner).
   Low NOx models in the downflow or horizontal positions must use Table 16 (21,000 Btuh/Burner). See input listed on rating plate.
   a. Obtain average yearly gas heat value (at installed altitude) from local gas supplier.
   b. Obtain average yearly gas specific gravity from local gas supplier.
   c. Find installation altitude in Table 15 or 16.
   d. Find closest natural gas heat value and specific gravity in Table 15 or 16.
   e. Follow heat value and specific gravity lines to point of intersection to find orifice size and manifold pressure settings for proper operation.
   f. Check and verify burner orifice size in furnace. NEVER ASSUME ORIFICE SIZE. ALWAYS CHECK AND VERIFY.
   g. Replace orifice with correct size if required by Table 15 or 16. Use only factory–supplied orifices. See EXAMPLE 2.

EXAMPLE 2: (0–2000 ft. (0–610 M) altitude)
For 22,000 Btuh per burner application use Table 15.
Heating value = 1000 Btuh/cu ft.
Specific gravity = 0.62
Therefore: Orifice No. 43*
Manifold pressure: 3.7–in. w.c.
*Furnace is shipped with No. 43 orifices. In this example all main burner orifices are the correct size and do not need to be changed to obtain proper input rate.

3. Adjust manifold pressure to obtain correct input rate.
   a. Turn gas valve ON/OFF switch to OFF.
   b. Remove manifold pressure tap plug from gas valve. (See Figure 41)
   c. Connect a water column manometer or similar device to manifold pressure tap.
   d. Turn gas valve ON/OFF switch to ON.
   e. Manually close blower door switch.
   f. Set thermostat to call for heat.
   g. Jumper R and W thermostat connections on furnace control board to start furnace.
   h. Remove regulator seal cap and turn regulator adjusting screw counterclockwise (out) to decrease input rate of clockwise (in) to increase input rate.
   i. Install regulator seal cap.
   j. Leave manometer or similar device connected and proceed to Step 4.

NOTE: DO NOT set manifold pressure less than 3.2–in. w.c. or more than 3.8–in. w.c. for natural gas at sea level. If manifold pressure is outside this range, change main burner orifices or refer Table 15 or 16.

NOTE: If orifice hole appears damaged or it is suspected to have been redrilled, check orifice hole with a numbered drill bit of correct size. Never redrill an orifice. A burr–free and squarely aligned orifice hole is essential for proper flame characteristics.

4. Verify natural gas input rate by clocking meter.

NOTE: Gas valve regulator adjustment cap must be in place for proper input to be clocked.

   a. Turn off all other gas appliances and pilots served by the meter.
   b. Run furnace for 3 minutes in heating operation.
   c. Measure time (in sec) for gas meter to complete 1 revolution and note reading. The 2 or 5 cubic feet dial provides a more accurate measurement of gas flow.
   d. Refer to Table 13 for cubic ft. of gas per hr.
   e. Multiply gas rate (cu ft./hr) by heating value (Btu/cu ft.) to obtain input.

If clocked rate does not match required input from Step 1, increase manifold pressure to increase input or decrease manifold pressure to decrease input. Repeat steps b through e until correct input is achieved. Reinstall regulator seal cap on gas valve.

5. Set temperature rise. The furnace must operate within the temperature rise ranges specified on the furnace rating plate. Do not exceed temperature rise range specified on unit rating plate. Determine the temperature rise as follows:

NOTE: Blower access door must be installed when taking temperature rise reading. Leaving blower access door off will result in incorrect temperature measurements.

   a. Place thermometers in return and supply ducts as close to furnace as possible. Be sure thermometers do not see radiant heat from heat exchangers. Radiant heat affects temperature rise readings. This practice is particularly important with straight–run ducts.
   b. When thermometer readings stabilize, subtract return–air temperature from supply–air temperature to determine air temperature rise.

NOTE: Blower access door must be installed for proper temperature rise measurement.

NOTE: If the temperature rise is outside this range, first check:

Gas input for heating operation.
Derate for altitude if applicable.
Return and supply ducts for excessive restrictions causing static pressures greater than 0.50–in. w.c.
Dirty filter.

⚠ WARNING

ELECTRICAL SHOCK HAZARD

Failure to follow this warning could result in personal injury or death.

Disconnect 115–v electrical power before changing speed tap.

   c. Adjust air temperature rise by adjusting blower speed. Increase blower speed to reduce temperature rise. Decrease blower speed to increase temperature rise.
   d. Turn thermostat down below room temperature and remove blower access door.
   e. To change motor speed selection for heating, remove blower motor lead from control HEAT terminal (See Figure 25) Select desired blower motor speed lead from one of the other terminals and relocate it to the HEAT terminal (See Table 12 for lead color identification). Reconnect original lead to SPARE terminal.

Table 12—Speed Selection

COLOR	SPEED	AS SHIPPED
White	Common	BLW
Black	High	COOL
Yellow †	Med–High	SPARE
Blue	Med–Low	HEAT
Red	Low	SPARE

NOTE: † Yellow available on 4 speed motor only

   f. Repeat steps a through e.
   g. When correct input rate and temperature rise is achieved, turn gas valve ON/OFF switch to OFF.
   h. Remove manometer or similar device from gas valve.
   i. Reinstall manifold pressure tap plug in gas valve.

⚠ WARNING

FIRE HAZARD

Failure to follow this warning could result in personal injury, death and/or property damage.

Reinstall manifold pressure tap plug in gas valve to prevent gas leak.

   j. Reinstall blower access door if removed.
   k. Turn gas valve ON/OFF switch to ON.

⚠ CAUTION

FURNACE OVERHEATING HAZARD

Failure to follow this caution may result in reduced furnace life.

Recheck temperature rise. It must be within limits specified on the rating plate. Recommended operation is at the midpoint of rise range or slightly above.

6. Set thermostat heat anticipator.
   a. Mechanical thermostat – Set thermostat heat anticipator to match the amp. draw of the electrical components in the R–W circuit. Accurate amp. draw readings can be obtained at the wires normally connected to thermostat subbase terminals, R and W. The thermostat anticipator should NOT be in the circuit while measuring current. (1.) Remove thermostat from subbase or from wall. (2.) Connect an amp. meter as shown in Figure 43 across the R and W subbase terminals or R and W wires at wall. (3.) Record amp. draw across terminals when furnace is in heating and after blower starts.
   (4.) Set heat anticipator on thermostat per thermostat instructions and install on subbase or wall.
   b. Electronic thermostat: Set cycle rate for 4 cycles per hr.
7. Adjust heat off delay The heat off delay has 4 adjustable settings from 90 sec to 180 sec. The heat off delay jumpers are located on the furnace control board. (See Figure 25) To change the heat off delay setting, move the jumper from one set of pins on the control to the pins used for the selected heat off delay. Factory heat off delay setting is 120 sec.
8. Set airflow CFM for cooling Select the desired blower motor speed lead for cooling airflow. See Table 5–Air Delivery–CFM (With Filter). See Table 12 for lead color identification.

Figure 41 — Gas Control Valve

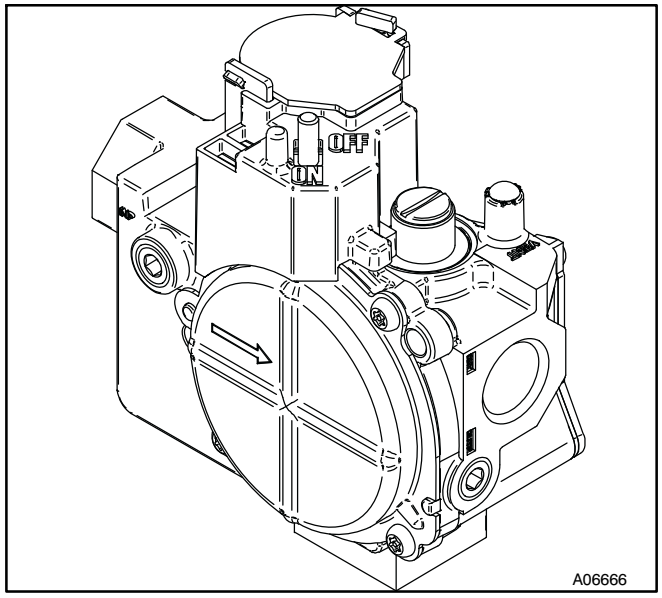

Figure 42 — Orifice Hole

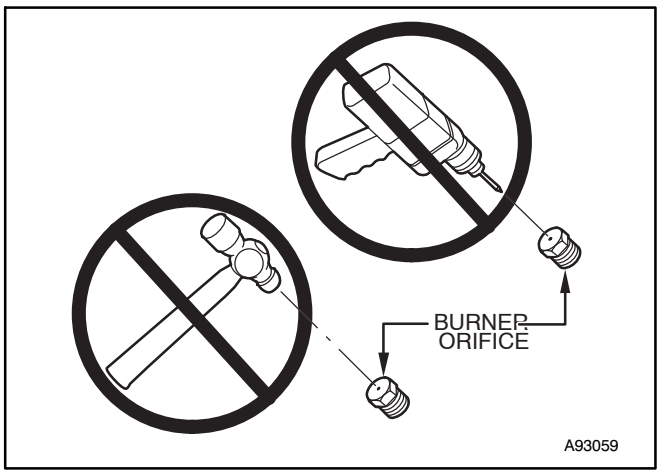

Figure 43 — Amp. Draw Check With Ammeter

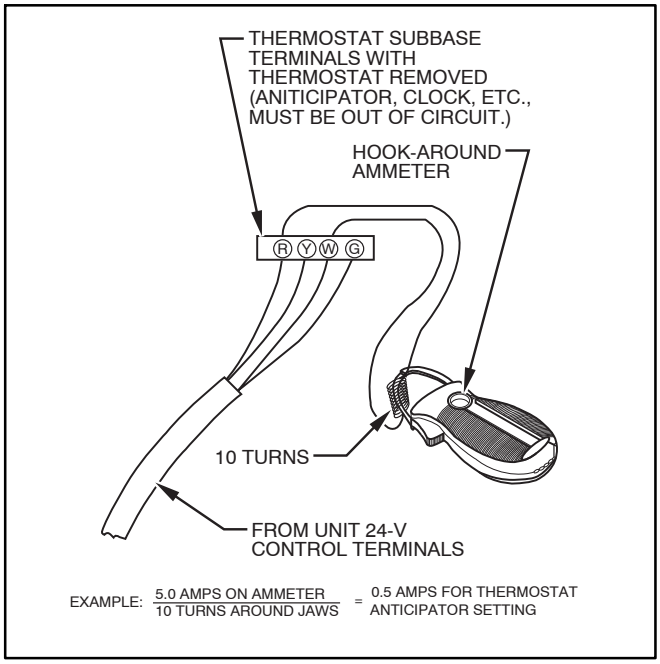

Step 4 —Check Safety Controls

The flame sensor, gas valve, and pressure switch were all checked in the Start–up procedure section as part of normal operation.

1. Check Main Limit Switch(es)
   This control shuts off combustion control system and energizes air–circulating blower motor, if furnace overheats. By using this method to check limit control, it can be established that limit is functioning properly and will operate if there is a restricted duct system or motor failure. If limit control does not function during this test, cause must be determined and corrected.
   a. Run furnace for at least 5 minutes.
   b. Gradually block off return air with a piece of cardboard or sheet metal until the limit trips.
   c. Unblock return air to permit normal circulation.
   d. Burners will re–light when furnace cools down.
2. Check draft safeguard switch.
   The purpose of this control is to cause the safe shutdown of the furnace during certain blocked vent conditions.
   a. Verify vent pipe is cool to the touch.

b. Disconnect power to furnace and remove vent connector from furnace vent elbow.
c. Restore power to furnace and set room thermostat above room temperature.
d. After normal start–up, allow furnace to operate for 2 minutes, then block vent elbow in furnace 80 percent of vent area with a piece of flat sheet metal.
e. Furnace should cycle off within 2 minutes. If gas does not shut off within 2 minutes, determine reason draft safeguard switch did not function properly and correct condition.
f. Remove blockage from furnace vent elbow.
g. Switch will auto–reset when it cools.
h. Re–install vent connector.

NOTE: Should switch remain open longer than 3 minutes, furnace control board will lockout the furnace for 3 hrs. To reset furnace control board, turn thermostat below room temperature or from HEAT to OFF and turn 115–v power OFF, then back ON.

3. Check Pressure Switch This control proves operation of the draft inducer blower.
   a. Turn off 115–v power to furnace.
   b. Disconnect inducer motor lead wires from wire harness.
   c. Turn on 115–v power to furnace.
   d. Set thermostat to “call for heat” and wait 1 minute. When pressure switch is functioning properly, hot surface igniter should NOT glow and control diagnostic light flashes a status code 3. If hot surface igniter glows when inducer motor is disconnected, shut down furnace immediately.
   e. Determine reason pressure switch did not function properly and correct condition.
   f. Turn off 115–v power to furnace.
   g. Reconnect inducer motor wires, replace outer door, and turn on 115–v power.
   h. Blower will run for 90 sec and flash status code 1+2 before beginning the call for heat again.
   i. Furnace should ignite normally.

Step 5 —Checklist

1. Put away tools and instruments. Clean up debris.
2. Verify that heat off–delay time is selected as desired.
3. Verify that blower and burner access doors are properly installed.
4. Cycle test furnace with room thermostat.
5. Check operation of accessories per manufacturer’s instructions.
6. Review User’s Guide with owner.
7. Attach literature packet to furnace.

Table 13—Gas Rate (cu ft./hr)

SECONDS FOR 1 REVOLUTION	SIZE OF TEST DIAL			SECONDS FOR 1 REVOLUTION	SIZE OF TEST DIAL		
	1 Cu Ft	2 Cu Ft	5 Cu Ft		1 Cu Ft	2 Cu Ft	5 Cu Ft
10	360	720	1800	50	72	144	360
11	327	655	1636	51	71	141	355
12	300	600	1500	52	69	138	346
13	277	555	1385	53	68	136	340
14	257	514	1286	54	67	133	333
15	240	480	1200	55	65	131	327
16	225	450	1125	56	64	129	321
17	212	424	1059	57	63	126	316
18	200	400	1000	58	62	124	310
19	189	379	947	59	61	122	305
20	180	360	900	60	60	120	300
21	171	343	857	62	58	116	290
22	164	327	818	64	56	112	281
23	157	313	783	66	54	109	273
24	150	300	750	68	53	106	265
25	144	288	720	70	51	103	257
26	138	277	692	72	50	100	250
27	133	267	667	74	48	97	243
28	129	257	643	76	47	95	237
29	124	248	621	78	46	92	231
30	120	240	600	80	45	90	225
31	116	232	581	82	44	88	220
32	113	225	563	84	43	86	214
33	109	218	545	86	42	84	209
34	106	212	529	88	41	82	205
35	103	206	514	90	40	80	200
36	100	200	500	92	39	78	196
37	97	195	486	94	38	76	192
38	95	189	474	96	38	75	188
39	92	185	462	98	37	74	184
40	90	180	450	100	36	72	180
41	88	176	439	102	35	71	178
42	86	172	429	104	35	69	173
43	84	167	419	106	34	68	170
44	82	164	409	108	33	67	167
45	80	160	400	110	33	65	164
46	78	157	391	112	32	64	161
47	76	153	383	116	31	62	155
48	75	150	375	120	30	60	150
49	73	147	367				

Table 14—Filter Size Information – in.(mm)

FURNACE CASING WIDTH	FILTER SIZE		FILTER TYPE
	SIDE RETURN	BOTTOM RETURN	
14–1/2 (368)	16 x 25 x 3/4 (406 x 635 x 19)	14 x 25 x 3/4 (356 x 635 x 19)	Washable*
17–1/2 (445)	16 x 25 x3/4 (406 x 635 x 19)	16 x 25 x 3/4 (406 x 635 x 19)	Washable*
21 (533)	16 x 25 x3/4 (406 x 635 x 19)	20 x 25 x 3/4 (508 x 635 x 19)	Washable*
24 (610)	16 x 25 x3/4 (406 x 635 x 19)	24 x 25 x 3/4 (610 x 635 x 19)	Washable*

* Recommended
** Some furnaces may have 2 filters.

Table 15—Orifice Size* and Manifold Pressure in. w.c. for Gas Input Rate
(Tabulated data based on 22,000 btuh per burner, derated 4 percent for each 1000 ft. (305 M) above sea level)

ALTITUDE RANGE FT. (M)		AVG. GAS HEAT VALUE AT ALTITUDE (BTU/CU FT.)	SPECIFIC GRAVITY OF NATURAL GAS							
			0.58		0.60		0.62		0.64	
			Orifice No.	Manifold Pressure	Orifice No.	Manifold Pressure	Orifice No.	Manifold Pressure	Orifice No.	Manifold Pressure
U.S.A.	0 to 2000 (0 to 610)	900	42	3.5	42	3.6	42	3.7	41	3.5
		925	42	3.3	42	3.4	42	3.5	42	3.7
		950	43	3.8	42	3.3	42	3.4	42	3.5
		975	43	3.6	43	3.8	42	3.2	42	3.3
		1000	43	3.5	43	3.6	43	3.7	43	3.8
		1025	43	3.3	43	3.4	43	3.5	43	3.6
		1050	44	3.6	43	3.2	43	3.4	43	3.5
		1075	44	3.4	44	3.5	43	3.2	43	3.3
		1100	44	3.3	44	3.4	44	3.5	43	3.2
U.S.A.	2001 to 3000 (610 to 914)	800	42	3.4	42	3.5	42	3.6	42	3.7
		825	42	3.2	42	3.3	42	3.4	42	3.5
		850	43	3.7	43	3.8	42	3.2	42	3.3
		875	43	3.5	43	3.6	43	3.7	43	3.8
		900	43	3.3	43	3.4	43	3.5	43	3.6
		925	43	3.1	43	3.2	43	3.3	43	3.4
		950	43	2.9	43	3.0	43	3.1	43	3.2
		975	43	2.8	43	2.9	43	3.0	43	3.1
		1000	43	2.6	43	2.7	43	2.8	43	2.9
U.S.A.	3001 to 4000 (914 to 1219)	775	42	3.2	42	3.3	42	3.4	42	3.5
		800	43	3.6	43	3.8	42	3.2	42	3.3
		825	43	3.4	43	3.5	43	3.7	43	3.8
		850	43	3.2	43	3.3	43	3.4	43	3.6
		875	43	3.0	43	3.1	43	3.3	43	3.4
		900	43	2.9	43	3.0	43	3.1	43	3.2
		925	43	2.7	43	2.8	43	2.9	43	3.0
		950	43	2.6	43	2.7	43	2.8	43	2.8
U.S.A.	4001 to 5000 (1219 to 1524)	750	43	3.6	43	3.8	42	3.2	42	3.3
		775	43	3.4	43	3.5	43	3.6	43	3.8
		800	43	3.2	43	3.3	43	3.4	43	3.5
		825	43	3.0	43	3.1	43	3.2	43	3.3
		850	43	2.8	43	2.9	43	3.0	43	3.1
		875	43	2.7	43	2.8	43	2.9	43	2.9
		900	43	2.5	43	2.6	43	2.7	43	2.8
		925	43	2.4	43	2.5	43	2.6	43	2.6
U.S.A.	5001 to 6000 (1524 to 1829)	725	43	3.4	43	3.5	43	3.6	43	3.7
		750	43	3.2	43	3.3	43	3.4	43	3.5
		775	43	3.0	43	3.1	43	3.2	43	3.3
		800	43	2.8	43	2.9	43	3.0	43	3.1
		825	43	2.6	43	2.7	43	2.8	43	2.9
		850	43	2.5	43	2.5	43	2.6	43	2.7
		875	43	2.3	43	2.4	43	2.5	43	2.6
		900	43	2.2	43	2.3	43	2.3	43	2.4
U.S.A.	6001 to 7000 (1829 to 2134)	675	43	3.4	43	3.5	43	3.6	43	3.7
		700	43	3.1	43	3.3	43	3.4	43	3.5
		725	43	2.9	43	3.0	43	3.1	43	3.2
		750	43	2.7	43	2.8	43	2.9	43	3.0
		775	43	2.6	43	2.7	43	2.7	43	2.8
		800	43	2.4	43	2.5	43	2.6	43	2.7
		825	43	2.3	43	2.3	43	2.4	43	2.5
		850	43	2.1	43	2.2	43	2.3	43	2.4

* Orifice numbers 43 are factory installed.

Table 15–Orifice Size* and Manifold Pressure in. w.c. for Gas Input Rate (Continued)
(Tabulated data based on 22,000 btuh per burner, derated 4 percent for each 1000 ft. (305 M) above sea level)

ALTITUDE RANGE FT. (M)		AVG. GAS HEAT VALUE AT ALTITUDE (BTU/CU FT.)	SPECIFIC GRAVITY OF NATURAL GAS							
			0.58		0.60		0.62		0.64	
			Orifice No.	Manifold Pressure	Orifice No.	Manifold Pressure	Orifice No.	Manifold Pressure	Orifice No.	Manifold Pressure
U.S.A.	7001 to 8000 (2134 to 2438)	650	43	3.1	43	3.2	43	3.4	43	3.5
		675	43	2.9	43	3.0	43	3.1	43	3.2
		700	43	2.7	43	2.8	43	2.9	43	3.0
		725	43	2.5	43	2.6	43	2.7	43	2.8
		750	43	2.4	43	2.4	43	2.5	43	2.6
		775	43	2.2	43	2.3	43	2.4	43	2.4
		800	43	2.1	43	2.1	43	2.2	43	2.3
		825	48	3.7	43	2.0	43	2.1	43	2.2
U.S.A.	8001 to 9000 (2438 to 2743)	625	43	2.9	43	3.0	43	3.1	43	3.2
		650	43	2.7	43	2.8	43	2.9	43	3.0
		675	43	2.5	43	2.6	43	2.7	43	2.8
		700	43	2.3	43	2.4	43	2.5	43	2.6
		725	43	2.2	43	2.2	43	2.3	43	2.4
		750	43	2.0	43	2.1	43	2.2	43	2.2
U.S.A.	9001 to 10,000 (2743 to 3048)	600	43	2.7	43	2.8	43	2.9	43	3.0
		625	43	2.5	43	2.6	43	2.6	43	2.7
		650	43	2.3	43	2.4	43	2.4	43	2.5
		675	43	2.1	43	2.2	43	2.3	43	2.3
		700	48	3.7	43	2.0	43	2.1	43	2.2
		725	48	3.5	48	3.6	48	3.7	43	2.0
		775	48	3.6	48	3.7	43	2.0	43	2.1

* Orifice numbers 43 are factory installed.

Table 16—Orifice Size* and Manifold Pressure in. w.c. for Gas Input Rate
(Tabulated data based on 21,000 btuh per burner, derated 4 percent for each 1000 ft. (305 M) above sea level)

ALTITUDE RANGE FT. (M)		AVG. GAS HEAT VALUE AT ALTITUDE (BTU/CU FT.)	SPECIFIC GRAVITY OF NATURAL GAS							
			0.58		0.60		0.62		0.64	
			Orifice No.	Manifold Pressure	Orifice No.	Manifold Pressure	Orifice No.	Manifold Pressure	Orifice No.	Manifold Pressure
U.S.A.	0 to 2000 (0 to 610)	900	42	3.2	42	3.3	42	3.4	42	3.5
		925	43	3.7	43	3.8	42	3.2	42	3.3
		950	43	3.5	43	3.6	43	3.7	43	3.8
		975	43	3.3	43	3.4	43	3.5	43	3.7
		1000	44	3.6	43	3.3	43	3.4	43	3.5
		1025	44	3.4	44	3.6	43	3.2	43	3.3
		1050	44	3.3	44	3.4	44	3.5	43	3.2
		1075	45	3.8	44	3.2	44	3.3	44	3.4
		1100	46	3.8	45	3.7	44	3.2	44	3.3
U.S.A.	2001 to 3000 (610 to 914)	800	43	3.8	42	3.2	42	3.3	42	3.4
		825	43	3.5	43	3.7	43	3.8	42	3.2
		850	43	3.3	43	3.5	43	3.6	43	3.7
		875	43	3.2	43	3.3	43	3.4	43	3.5
		900	43	3.0	43	3.1	43	3.2	43	3.3
		925	43	2.8	43	2.9	43	3.0	43	3.1
		950	43	2.7	43	2.8	43	2.9	43	2.9
		975	43	2.5	43	2.6	43	2.7	43	2.8
		1000	43	2.4	43	2.5	43	2.6	43	2.7
U.S.A.	3001 to 4000 (914 to 1219)	775	43	3.5	43	3.7	43	3.8	42	3.2
		800	43	3.3	43	3.4	43	3.5	43	3.7
		825	43	3.1	43	3.2	43	3.3	43	3.4
		850	43	2.9	43	3.0	43	3.1	43	3.2
		875	43	2.8	43	2.9	43	3.0	43	3.1
		900	43	2.6	43	2.7	43	2.8	43	2.9
		925	43	2.5	43	2.6	43	2.7	43	2.7
		950	43	2.4	43	2.4	43	2.5	43	2.6
U.S.A.	4001 to 5000 (1219 to 1524)	750	43	3.3	43	3.4	43	3.5	43	3.6
		775	43	3.1	43	3.2	43	3.3	43	3.4
		800	43	2.9	43	3.0	43	3.1	43	3.2
		825	43	2.7	43	2.8	43	2.9	43	3.0
		850	43	2.6	43	2.7	43	2.8	43	2.8
		875	43	2.4	43	2.5	43	2.6	43	2.7
		900	43	2.3	43	2.4	43	2.5	43	2.5
		925	43	2.2	43	2.2	43	2.3	43	2.4
U.S.A.	5001 to 6000 (1524 to 1829)	725	43	3.1	43	3.2	43	3.3	43	3.4
		750	43	2.9	43	3.0	43	3.1	43	3.2
		775	43	2.7	43	2.8	43	2.9	43	3.0
		800	43	2.5	43	2.6	43	2.7	43	2.8
		825	43	2.4	43	2.5	43	2.5	43	2.6
		850	43	2.2	43	2.3	43	2.4	43	2.5
		875	43	2.1	43	2.2	43	2.3	43	2.3
		900	43	2.0	43	2.1	43	2.1	43	2.2
U.S.A.	6001 to 7000 (1829 to 2134)	675	43	3.1	43	3.2	43	3.3	43	3.4
		700	43	2.9	43	3.0	43	3.1	43	3.2
		725	43	2.7	43	2.8	43	2.9	43	2.9
		750	43	2.5	43	2.6	43	2.7	43	2.8
		775	43	2.3	43	2.4	43	2.5	43	2.6
		800	43	2.2	43	2.3	43	2.3	43	2.4
		825	43	2.1	43	2.1	43	2.2	43	2.3
		850	48	3.7	43	2.0	43	2.1	43	2.1

* Orifice numbers 43 are factory installed.

Table 16—Orifice Size* and Manifold Pressure in. w.c. for Gas Input Rate (Continued)
(Tabulated data based on 21,000 btuh per burner, derated 4 percent for each 1000 ft. (305 M) above sea level)

ALTITUDE RANGE FT. (M)		AVG. GAS HEAT VALUE AT ALTITUDE (BTU/CU FT.)	SPECIFIC GRAVITY OF NATURAL GAS							
			0.58		0.60		0.62		0.64	
			Orifice No.	Manifold Pressure	Orifice No.	Manifold Pressure	Orifice No.	Manifold Pressure	Orifice No.	Manifold Pressure
U.S.A.	7001 to 8000 (2134 to 2438)	650	43	2.9	43	3.0	43	3.1	43	3.2
		675	43	2.7	43	2.7	43	2.8	43	2.9
		700	43	2.5	43	2.6	43	2.6	43	2.7
		725	43	2.3	43	2.4	43	2.5	43	2.5
		750	43	2.1	43	2.2	43	2.3	43	2.4
		775	43	2.0	43	2.1	43	2.2	43	2.2
		800	48	3.6	48	3.7	43	2.0	43	2.1
		825	48	3.3	48	3.5	48	3.6	48	3.7
U.S.A.	8001 to 9000 (2438 to 2743)	625	43	2.7	43	2.7	43	2.8	43	2.9
		650	43	2.5	43	2.5	43	2.6	43	2.7
		675	43	2.3	43	2.4	43	2.4	43	2.5
		700	43	2.1	43	2.2	43	2.3	43	2.3
		725	48	3.7	43	2.0	43	2.1	43	2.2
		750	48	3.5	48	3.6	48	3.7	43	2.0
U.S.A.	9001 to 10,000 (2743 to 3048)	600	43	2.4	43	2.5	43	2.6	43	2.7
		625	43	2.3	43	2.3	43	2.4	43	2.5
		650	43	2.1	43	2.2	43	2.2	43	2.3
		675	48	3.6	48	3.8	43	2.1	43	2.1
		700	48	3.4	48	3.5	48	3.6	48	3.7
		725	49	3.7	49	3.8	48	3.4	48	3.5
		775	49	3.8	48	3.4	48	3.5	48	3.6

* Orifice numbers 43 are factory installed.

Figure 44 — Service Label

SERVICE

To perform status code recall/component test, the control must be in idle mode (no calls for heat, cool, or fan with the blower off) displaying a "Heartbeat". Status code recall/component test can be performed in one of two ways.:
1. Briefly (2-3 seconds) connect the TEST/TWIN terminal to the "C" thermostat terminal with a jumper wire. (NOTE: If connected for more than 4-5 seconds status code 10 will flash but it will not overwrite the previous status code).

OR

2. Briefly remove then reconnect one limit wire (main, rollout, or draft-safeguard switch), (NOTE: If limit wire is disconnected for more than 4-5 seconds status code 4 will flash and the previous status code will be lost).

After the status code is flashed 4 times the component test will begin (see "Component Test Sequence" below). If no previous status code is available the control will not flash a status code and will immediately start the component test. Stored status codes are erased automatically after 72 hours.

EACH OF THE FOLLOWING STATUS CODES IS A SINGLE OR TWO DIGIT NUMBER WITH THE FIRST NUMBER DETERMINED BY THE NUMBER OF SHORT FLASHES AND THE SECOND NUMBER AFTER THE PLUS (+) SIGN IS THE NUMBER OF LONG FLASHES.

LED STATUS CODES

HEARTBEAT (bright-dim) - Control has 24VAC power

2 PRESSURE SWITCH DID NOT OPEN Check for:
- Obstructed pressure tubing. - Pressure switch stuck closed.

3 PRESSURE SWITCH DID NOT CLOSE OR REOPENED - If open longer than five minutes, inducer shuts off for 15 minutes before retry. Check for: - Excessive wind
- Proper vent sizing - Defective inducer motor
- Low inducer voltage (115VAC) - Defective pressure switch
- Inadequate combustion air supply - Disconnected or obstructed pressure tubing
- Low inlet gas pressure (if LGPS used) - Restricted vent

If it opens during blower on-delay period, blower will come on for the selected blower off-delay.

4 LIMIT CIRCUIT FAULT - Indicates a limit, draft safeguard, flame rollout, or blocked vent switch (if used) is open. Blower will run for 4 minutes or until open switch remakes whichever is longer. If open longer than 3 minutes, code changes to lockout #7. If open less than 3 minutes status code #4 continues to flash until blower shuts off. Flame rollout switch and BVSS require manual reset. Check for: - Restricted vent - Proper vent sizing - Loose blower wheel
- Excessive wind - Dirty filter or restricted duct system - Defective blower motor or capacitor
- Defective switch or connections - Inadequate combustion air supply (Flame Roll-out Switch open)

5 ABNORMAL FLAME-PROVING SIGNAL - Flame is proved while gas valve is de-energized. Inducer will run until fault is cleared. Check for: - Leaky gas valve - Stuck-open gas valve

6 IGNITION PROVING FAILURE - Control will try three more times before lockout #6+1 occurs. If flame signal lost during blower on-delay period, blower will come on for the selected blower off-delay. Check for: - Flame sensor must not be grounded

6 Continued - Oxide buildup on flame sensor (clean with fine steel wool).
- Proper flame sense microamps (.5 microamps D.C. min., 4.0 - 6.0 nominal).
- Gas valve defective or gas valve turned off - Manual valve shut-off - Low inlet gas pressure
- Defective Hot Surface Ignitor - Control ground continuity - Inadequate flame carryover or rough ignition
- Green/Yellow wire **MUST** be connected to furnace sheet metal.

7 LIMIT CIRCUIT LOCKOUT - Lockout occurs if the limit, draft safeguard, flame rollout, or blocked vent switch (if used) is open longer than 3 minutes. - Control will auto reset after three hours. - Refer to #4.

8 GAS HEATING LOCKOUT - Control will NOT auto reset. Check for:
- Mis-wired gas valve - Defective control (valve relay)

10 POLARITY - Line voltage (115VAC) polarity reversed. - If twinned, refer to twinning kit instructions.

1+2 BLOWER ON AFTER POWER UP (115 VAC or 24 VAC) - Blower runs for 90 seconds, if unit is powered up during a call for heat (R-W closed) or (R-W) opens during blower on-delay. during blower on-delay.

6+1 IGNITION LOCKOUT - Control will auto-reset after three hours. Refer to #6.

OFF SECONDARY VOLTAGE FUSE IS OPEN Check for: - Door switch not closed
-115VAC at L1 and Neutral, 24VAC at 24VAC RED and COM BLUE, 24V Fuse 3A
- Door switch not closed - Short circuit in secondary voltage (24VAC) wiring.

ON SOLID CONTROL CIRCUITRY LOCKOUT Auto-reset after one hour lockout due to;
- Gas valve relay stuck open - Flame sense circuit failure - Software check error
Reset power to clear lockout. Replace control if status code repeats.

COMPONENT TEST SEQUENCE

Gas valve and humidifier will not be turned on. Components will be tested in sequence as follows: Inducer motor will run for entire component test, and the following components are ON for 10 - 15 seconds each individually; hot surface igniter, FAN (if equipped), HEAT speed, COOL speed.

337016-101 REV. A

SERVICE AND MAINTENANCE PROCEDURES

Untrained personnel can perform basic maintenance functions such as cleaning and replacing air filters. All other operations must be performed by trained service personnel. A qualified service person should inspect the furnace once a year.

⚠ WARNING

FIRE, EXPLOSION, ELECTRICAL SHOCK HAZARD

Failure to follow this warning could result in personal injury, death and/or property damage.

The ability to properly perform maintenance on this equipment requires certain knowledge, mechanical skills, tools, and equipment. If you do not possess these, do not attempt to perform any maintenance on this equipment other than those procedures recommended in the User's Manual.

⚠ WARNING

ELECTRICAL SHOCK, FIRE OR EXPLOSION HAZARD

Failure to follow this warning could result in personal injury or death, or property damage.

Before servicing, disconnect all electrical power to furnace and install a lock out tag. Verify proper operation after servicing.

⚠ CAUTION

ELECTRICAL OPERATION HAZARD

Failure to follow this caution may result in improper furnace operation.

Label all wires prior to disconnection when servicing controls. Wiring errors can cause improper and dangerous operation.

⚠ CAUTION

ENVIRONMENTAL HAZARD

Failure to follow this caution may result in environmental pollution.

Remove and recycle all components or materials (i.e. oil, refrigerant, et.) before unit final disposal.

Step 1 —Introduction

GENERAL

These instructions are written as if the furnace is installed in an upflow application. An upflow furnace application is where the blower is located below the combustion and controls section of the furnace, and conditioned air is discharged upward. Since this furnace can be installed in any of the 4 positions shown in Figure 4, you must revise your orientation to component location accordingly.

ELECTRICAL CONTROLS AND WIRING

⚠ WARNING

ELECTRICAL SHOCK HAZARD

Failure to follow this warning could result in personal injury or death.

Before installing, modifying, or servicing system, main electrical disconnect switch must be in the OFF position and install a lockout tag. There may be more than one electrical supply to the furnace. Check accessories and cooling unit for additional electrical supplies that must be shut off during furnace servicing. Lockout and tag switch with a suitable warning label. Verify proper operation after servicing.

The electrical ground and polarity for 115−v wiring must be properly maintained. Refer to Figure 26 for field wiring information and Figure 48 for furnace wiring information.

NOTE: If the polarity is not correct, the STATUS LED on the control will flash a status code 10 and prevent the furnace from heating. The control system also requires an earth ground for proper operation of the control and flame−sensing electrode.

The 24−v circuit contains an automotive−type, 3−amp. fuse located on the control. (See Figure 25) Any shorts of the 24−v wiring during installation, service, or maintenance will cause this fuse to blow. If fuse replacement is required, use ONLY a 3−amp. fuse. The control LED will be off when fuse needs to be replaced.

Proper instrumentation is required to service electrical controls. The control in this furnace is equipped with a Status Code LED (Light−Emitting Diode) to aid in installation, servicing, and troubleshooting. It can be viewed through the sight glass in blower access door. The furnace control LED is either ON continuously, flashing a heart beat, or a status code.

For an explanation of status codes, refer to service label located on blower access door or Figure 44.

See Figure 49 for a brief Troubleshooting Guide.

STATUS CODE RECOVERY AND COMPONENT TEST

To retrieve status code, proceed with the following:

NOTE: No thermostat signal may be present at control, and all blower−OFF delays must be completed.

Perform component self−test as shown on the SERVICE label, located on the of blower access door.

Step 2 —Care and Maintenance

For continuing high performance and to minimize possible equipment failure, periodic maintenance must be performed on this equipment. Consult your local dealer about proper frequency of maintenance and the availability of a maintenance contract.

⚠ WARNING

FIRE OR EXPLOSION HAZARD

Failure to follow this warning could result in personal injury, death and/or property damage.

Never store anything on, near, or in contact with the furnace, such as:
1. Spray or aerosol cans, rags, brooms, dust mops, vacuum cleaners, or other cleaning tools.
2. Soap powders, bleaches, waxes or other cleaning compounds, plastic or plastic containers, gasoline, kerosene, cigarette lighter fluid, dry cleaning fluids, or other volatile fluids.
3. Paint thinners and other painting compounds, paper bags, or other paper products.

⚠ WARNING

ELECTRICAL SHOCK AND FIRE HAZARD

Failure to follow this warning could result in personal injury, death or property damage.

Turn off the gas and electrical supplies to the unit and install a lock out tag before performing any maintenance or service. Follow the operating instructions on the label attached to the furnace.

⚠ WARNING

CARBON MONOXIDE POISONING AND FIRE HAZARD

Failure to follow this warning could result in personal injury, death and/or property damage.

Never operate unit without a filter or with filter access door removed.

⚠ CAUTION

CUT HAZARD

Failure to follow this caution may result in personal injury.

Sheet metal parts may have sharp edges or burrs. Use care and wear appropriate protective clothing, safety glasses and gloves when handling parts and servicing furnaces.

The minimum maintenance on this furnace is as follows:

1. Check and clean air filter each month or more frequently if required. Replace if torn.

2. Check blower motor and wheel for cleanliness each heating and cooling season. Clean as necessary.

3. Check electrical connections for tightness and controls for proper operation each heating season. Service as necessary.

4. Inspect burner compartment before each heating season for rust, corrosion, soot or excessive dust. If necessary, have furnace and burner serviced by a qualified service agency.

5. Inspect the vent pipe/vent system before each heating season for rust, corrosion, water leakage, sagging pipes or broken fittings. Have vent pipes/vent system serviced by a qualified service agency.

6. Inspect any accessories attached to the furnace such as a humidifier or electronic air cleaner. Perform any service or maintenance to the accessories as recommended in the accessory instructions.

CLEANING AND/OR REPLACING AIR FILTER

The air filter arrangement will vary depending on the application. The filter is exterior to the furnace casing.

NOTE: If the filter has an airflow direction arrow, the arrow must point towards the blower.

⚠ CAUTION

CUT HAZARD

Failure to follow this caution may result in personal injury.

Sheet metal parts may have sharp edges or burrs. Use care and wear appropriate protective clothing, safety glasses and gloves when handling parts and servicing furnaces.

BLOWER MOTOR AND WHEEL

⚠ WARNING

ELECTRICAL SHOCK HAZARD

Failure to follow this warning could result in personal injury or death.

Blower access door switch opens 115–v power to control. No component operation can occur unless switch is closed. Caution must be taken when manually closing this switch for service purposes.

NOTE: The blower wheel should not be dropped or bent as balance will be affected.

The following steps should be performed by a qualified service agency.

To ensure long life and high efficiency, clean accumulated dirt and grease from blower wheel and motor annually.

The inducer and blower motors are pre–lubricated and require no additional lubrication. These motors can be identified by the absence of oil ports on each end of the motor.

Clean blower motor and wheel as follows:

1. Turn off electrical supply to furnace.
2. Remove outer door.
3. For downflow or horizontal furnaces having vent pipes within the furnace that pass in front of the blower access door:
   a. Disconnect vent connector from furnace vent elbow.
   b. Disconnect and remove short piece of vent pipe from within furnace.
4. Remove 2 screws from blower access door and remove blower access door.
5. All factory wires can be left connected, but field thermostat connections may need to be disconnected depending on their length and routing.
6. Remove 2 screws holding blower assembly to blower deck and slide blower assembly out of furnace.
7. Clean blower wheel and motor using a vacuum with soft brush attachment. Blower wheel blades may be cleaned with a small paint or flux brush. Do not remove or disturb balance weights (clips) on blower wheel blades.

8. Vacuum any loose dust from blower housing, wheel and motor.
9. If a greasy residue is present on blower wheel, remove wheel from the blower housing and wash it with an appropriate degreaser. To remove wheel:

NOTE: Before disassembly, mark blower motor, and blower housing so motor and each arm is positioned at the same location during reassembly.

   a. Disconnect capacitor wires and ground wire attached to blower housing.
   b. Remove screws securing cutoff plate and remove cutoff plate from housing.
   c. Loosen set screw holding blower wheel on motor shaft (160+/−20 in.−lb. when reassembling).
   d. Remove bolts holding motor to blower housing and slide motor out of wheel (40+/−10 in.−lb. when reassembling).
   e. Remove blower wheel from housing.
   f. Clean wheel and housing.
10. Reassemble motor and blower by reversing steps 9f through 9a, finishing with 9a. Be sure to reattach ground wire to the blower housing.
11. Verify that blower wheel is centered in blower housing and set screw contacts the flat portion of the motor shaft. Loosen set screw on blower wheel and reposition if necessary.
12. Spin the blower wheel by hand to verify that the wheel does not rub on the housing.
13. Reinstall blower assembly in furnace.

⚠ CAUTION

UNIT DAMAGE HAZARD

Failure to follow this caution may result in shortened heat exchanger life.

Heating fan speed(s) MUST be adjusted to provide proper air temperature rise as specified on the rating plate. Recommended operation is at the midpoint of the rise range or slightly above. Refer to SET TEMPERATURE RISE under START−UP, ADJUSTMENT, and SAFETY CHECK.

14. Connect thermostat leads if previously disconnected.
15. To check blower for proper rotation:
   a. Turn on electrical supply.

⚠ WARNING

ELECTRICAL SHOCK HAZARD

Failure to follow this warning could result in personal injury, or death.

Blower access door switch opens 115−v power to furnace control. No component operation can occur unless switch is closed. Exercise caution to avoid electrical shock from exposed electrical components when manually closing this switch for service purposes.

   b. Manually close blower access door switch.

NOTE: If thermostat terminals are jumpered at the time blower access door switch is closed, blower will run for 90 sec before beginning a heating or cooling cycle.

   c. Perform component self−test as shown on the SERVICE label, located on the blower access door.
16. If furnace is operating properly, RELEASE BLOWER ACCESS DOOR SWITCH. Remove any jumpers or reconnect any disconnected thermostat leads. Replace blower access door.
17. Downflow or horizontal furnaces with vent pipe through furnace only:
   a. Install and connect short piece of vent pipe inside furnace to existing vent.
   b. Connect vent connector to vent elbow.
18. Reinstall casing door.
19. Turn on gas supply and cycle furnace through one complete heating and cooling cycle. Verify the furnace temperature rise as shown in Adjustments Section. Adjust temperature rise as shown in Adjustments Section. If outdoor temperature is below 70°F, (21°C) turn off circuit breaker to outdoor unit before running furnace in the cooling cycle. Turn outdoor circuit breaker on after completing cooling cycle.

CLEANING HEAT EXCHANGER

The following steps should be performed by a qualified service agency:

NOTE: If the heat exchangers get a heavy accumulation of soot and carbon, they should be replaced rather than trying to clean them thoroughly. A heavy build−up of soot and carbon indicates that a problem exists which needs to be corrected, such as improper adjustment of manifold pressure, insufficient or poor quality combustion air, incorrect size or damaged manifold orifice(s), improper gas, or a restricted heat exchanger. Action must be taken to correct the problem.

If it becomes necessary to clean the heat exchangers because of dust or corrosion, proceed as follows:

1. Turn OFF gas and electrical power to furnace.
2. Remove outer access door.
3. Disconnect vent connector from furnace vent elbow.
4. For downflow or horizontal furnace having an internal vent pipe, remove internal vent pipe within the casing.
5. Disconnect wires to the following components. Mark wires to aid in reconnection of (be careful when disconnecting wires from switches because damage may occur):
   a. Draft safeguard switch.
   b. Inducer motor.
   c. Pressure switch(es).
   d. Limit overtemperature switch.
   e. Gas valve.
   f. Hot surface igniter.
   g. Flame−sensing electrode.
   h. Flame rollout switches.
   i. Remove NOx baffles on low NOx models.
6. Remove screws that fasten the collector box assembly to the cell panel. Be careful not to damage the collector box. Inducer assembly and elbow need not be removed from collector box.
7. Disconnect gas line from gas manifold.
8. Remove the 5 screws that attach the burner assembly to the cell panel. The gas valve and individual burners need not be removed from support assembly.

NOTE: Be very careful when removing burner assembly to avoid breaking igniter. See Figure 45 and Figure 46 for correct igniter location.

9. Using field−provided 25−caliber rifle cleaning brush, 36−in. (914 mm) long, 1/4 in. (6 mm) diameter steel

spring cable, a variable speed reversible electric drill, and vacuum cleaner, clean cells as follows:

a. Remove metal screw fitting from wire brush to allow insertion into cable.

b. Insert the twisted wire end of brush into end of spring cable, and crimp tight with crimping tool or crimp by striking with ball−peen hammer. TIGHTNESS IS VERY IMPORTANT.

NOTE: The materials needed in item 9 can usually be purchased at local hardware stores.

(1) Attach variable−speed, reversible drill to the end of spring cable (end opposite brush).

(2) Insert brush end of cable into the outlet opening of cell and slowly rotate with drill. DO NOT force cable. Gradually insert cable into upper pass of cell. (See Figure 47)

(3) Work cable in and out of cell 3 or 4 times to obtain sufficient cleaning. DO NOT pull cable with great force. Reverse drill and gradually work cable out.

Figure 45 — Igniter Position−Side View

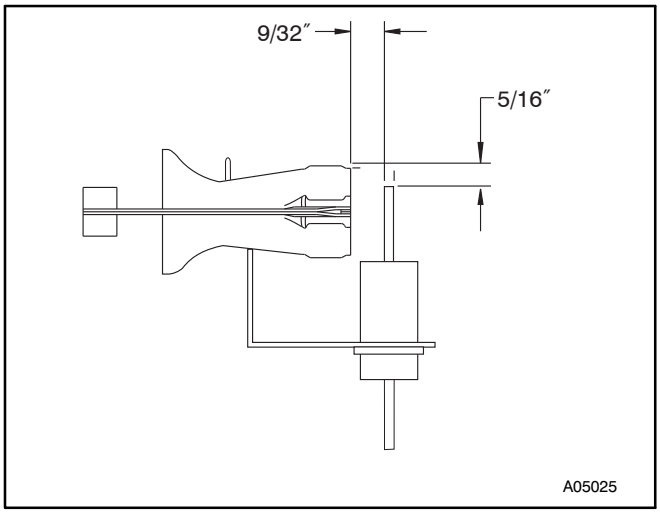

Figure 46 — Igniter Position−Top View

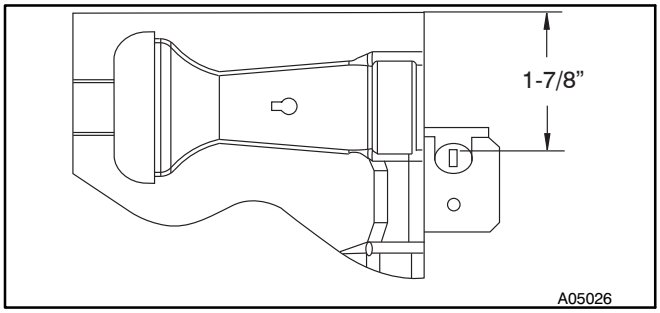

Figure 47 — Cleaning Heat Exchanger Cell

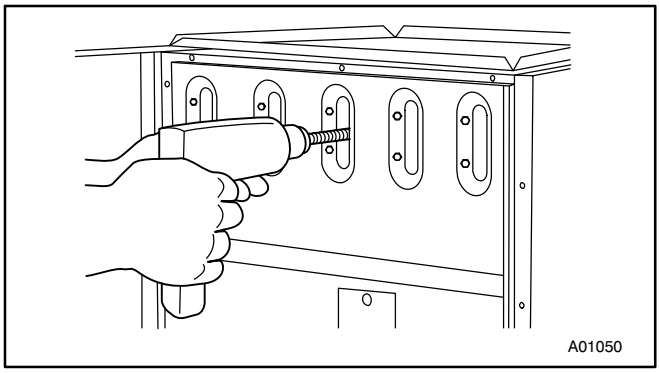

(4) Insert brush end of cable in burner inlet opening of cell, and proceed to clean 2 lower passes of cell in same manner as upper pass.

(5) Repeat foregoing procedures until each cell in furnace has been cleaned.

(6) Using vacuum cleaner, remove residue from each cell.

(7) Using vacuum cleaner with soft brush attachment, clean burner assembly.

(8) Clean flame sensor with fine steel wool.

(9) Install NOx baffles (if removed).

(10) Reinstall burner assembly. Center burners in cell openings.

10. Remove old sealant from cell panel and collector box flange.
11. Spray releasing agent on the heat exchanger cell panel where collector box assembly contacts cell panel.

NOTE: A releasing agent such as a vegetable oil cooking spray that does not contain corn oil, canola oil, halogenated hydrocarbons or aromatic content, which may prevent an inadequate seal from occuring, and RTV sealant such as G.E. RTV 162, G.E. RTV 6702, or Dow−Corning RTV 738 sealant are required. DO NOT substitute any other type of RTV sealant.

12. Apply new sealant to flange of collector box and attach to cell panel using existing screws, making sure all screws are secure.
13. Reconnect wires to the following components. (Use connection diagram on wiring label, if wires were not marked for reconnection locations.):
    a. Draft safeguard switch.
    b. Inducer motor.
    c. Pressure switch(es).
    d. Limit over−temperature switch.
    e. Gas valve.
    f. Hot surface igniter.
    g. Flame−sensing electrode.
    h. Flame rollout switches.
    i. Install NOx baffles (if removed).
14. Reinstall internal vent pipe, if applicable.
15. Reinstall vent connector on furnace vent elbow. Securely fasten vent connector to vent elbow with 2 field−supplied, corrosion−resistant, sheet metal screws located 180° apart.
16. Replace blower access door only, if it was removed.
17. Set thermostat above room temperature and check furnace for proper operation.
18. Verify blower airflow and speed changes between heating and cooling.

⚠ WARNING

FIRE OR EXPLOSION HAZARD

Failure to follow this warning could result in personal injury, death and/or property damage.

Never test for gas leaks with an open flame. Use a commercially available soap solution made specifically for the detection of leaks to check all connections.

19. Check for gas leaks.
20. Replace outer access door.

Step 3 —Sequence of Operation

NOTE: Furnace control must be grounded for proper operation or control will lock out. Control is grounded through green/yellow wire routed to gas valve and manifold bracket screw.

Using the schematic diagram in Figure 48, follow the sequence of operation through the different modes. Read and follow the wiring diagram very carefully.

NOTE: If a power interruption occurs during a call for heat (W), the control will start a 90−sec blower−only ON period two seconds after power is restored, if the thermostat is still calling for gas heating. The GREEN LED light will flash code 1+2 during the 90−sec period, after which the LED will be flashing a heartbeat, as long as no faults are detected. After the 90−sec period, the furnace will respond to the thermostat normally.

The blower door must be installed for power to be conducted through the blower door interlock switch ILK to the furnace control CPU, transformer TRAN, inducer motor IDM, blower motor BLWM, hot−surface igniter HSI, and gas valve GV.

1. **Heating**
   (See Figure 26 for thermostat connections.) The wall thermostat "calls for heat," closing the R−to−W circuit. The furnace control performs a self−check, verifies the pressure switch contacts PRS are open, and starts the inducer motor IDM.

NOTE: There are two humidifier terminals available 24VAC (HUM 24VAC) and 115VAC (HUM). Confirm the correct terminal to voltage is being used.

a. **Inducer Prepurge Period**− The inducer enable relay contacts IDR close and allow 115 VAC to inducer motor and **HUM** terminal (not to be confused with the 24−v **HUM 24 VAC** terminal). As the inducer motor IDM comes up to speed, the pressure switch contacts PRS close, 24 VAC power is supplied for a field installed humidifier at the HUM 24VAC terminal and the control begins a 15−sec prepurge period.

b. **Igniter Warm−Up**− At the end of the prepurge period, the Hot−Surface igniter HSI is energized for a 17−second igniter warm−up period.

c. **Trial−for−Ignition Sequence**− When the igniter warm−up period is completed, the main gas valve relay contacts GVR close to energize the gas valve GV, the gas valve opens, The gas valve GV permits gas flow to the burners where it is ignited by the HSI. Five seconds after the GVR closes, a 2−second flame proving period begins. The HSI igniter will remain energized until the flame is sensed or until the 2−second flame proving period begins.

d. **Flame−Proving**− When the burner flame is proved at the flame−proving sensor electrode FSE, the furnace control CPU begins the blower−ON delay period and continues to hold the gas valve GV open. If the burner flame is not proved within two seconds, the control CPU will close the gas valve GV, and the control CPU will repeat the ignition sequence for up to three more Trials−For−Ignition before going to Ignition−Lockout. Lockout will be reset automatically after three hours or by momentarily interrupting 115 vac power to the furnace, or by interrupting 24 vac power at 24VAC or COM to the furnace control CPU (not at W, G, R, etc.) If flame is proved when flame should not be present, the furnace control CPU will lock out of Gas−Heating mode and operate the inducer motor IDM until flame is no longer proved.

e. **Blower−On Delay**− If the burner flame is proven, the blower motor is energized on HEAT speed 25 sec after the gas valve GV is energized. Simultaneously, the electronic air cleaner terminal EAC 1 AMP is energized and remains energized as long as the blower motor BLWM is energized.

f. **Heat−Off Delay**− When the thermostat is satisfied, the R−to−W circuit is opened, de−energizing the gas valve GV, stopping gas flow to the burners, and de−energizing the 24−v humidifier terminal HUM 24VAC. The inducer motor IDM will remain energized for a 5−second post−purge period. Then turn off the inducer motor and HUM (115−v) humidifier terminal. The blower motor BLWM and air cleaner terminal EAC 1 AMP will remain energized for 90, 120, 150, or 180 seconds (depending on the HEAT−OFF delay selection). The furnace control CPU is factory−set for a 120−second Heat−Off Delay.

2. **Cooling Mode**
   (See Figure 26 for thermostat connections.) The thermostat closes the R−to−G−and−Y circuits. The R−to−Y circuit starts the outdoor unit, and the R−to−G and Y circuits start the furnace blower motor BLWM on COOL speed. The electronic air cleaner terminal EAC 1 AMP is energized with 115 vac when the blower motor BLWM is operating. When the thermostat is satisfied, the R−to−G−and−Y circuits are opened. The outdoor unit will stop, and the furnace blower motor BLWM will continue operating on the COOL speed for an additional 90 sec. Cut jumper J2 to reduce the cooling off−delay to 5 sec. (See Figure 25)

3. **Continuous Blower Mode**
   When the R−to−G circuit is closed by the thermostat, the blower motor BLWM will operate on continuous−blower speed (same as HEAT speed). Terminal EAC 1 AMP is energized as long as the blower motor BLWM is energized.
   During a call for heat, the blower BLWM will stop during igniter warm−up (17 sec), ignition, and blower−ON delay (25 sec), allowing the furnace heat exchangers to heat up more quickly, then restarts at the end of the blower−ON delay period at HEAT speed.
   When the thermostat "calls for cooling", the blower motor BLWM will operate at COOL speed. When the thermostat is satisfied, the blower motor BLWM will operate an additional 90 sec, on COOL speed before reverting back to continuous blower speed.
   When the R−to−G circuit is opened, the blower motor BLWM will continue operating for an additional 5 sec, if no other function requires blower motor BLWM operation.

4. **Heat Pump**
   When installed with a heat pump, the furnace control automatically changes the timing sequence to avoid long blower off times during demand defrost cycles. When the R−to−W−and−Y or R−to−W−and−Y−and−G circuits are energized the furnace control CPU will continue to turn on the blower motor BLWM at HEAT speed, and begin a heating cycle. The blower motor BLWM will remain on until the end of the prepurge period, then shut off for 24 sec then come back on at HEAT speed. When the W input signal disappears, the furnace control begins a normal inducer post−purge period and the blower switches to COOL speed after a 3 sec delay. If the R−to−W−and−Y−and−G signals disappear at the same time, the blower motor BLWM will remain on for the selected blower−OFF delay period. If the R−to−W−and−Y signals disappear, leaving the G signal, the blower motor BLWM will continue running the blower motor at HEAT speed after the selected blower−OFF delay period is completed.

Step 4 —Wiring Diagrams

Refer to Figure 25 and Figure 48 for wiring diagrams.

Step 5 —Troubleshooting

Refer to the service label (See Figure 44 or Figure 49).

Figure 48 — Wiring Diagram for Models

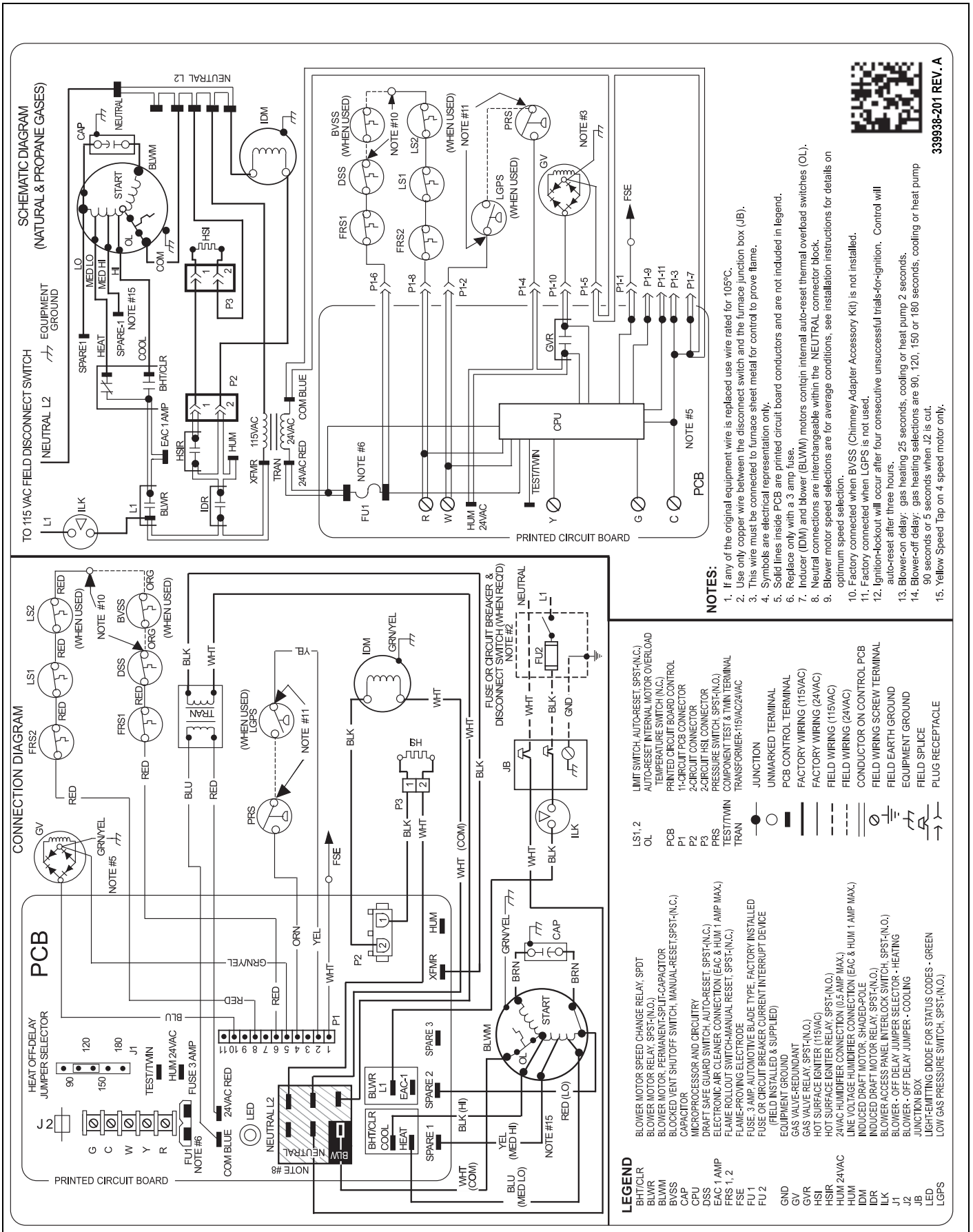

NOTES:

1. If any of the original equipment wire is replaced use wire rated for 105ºC.
2. Use only copper wire between the disconnect switch and the furnace junction box (JB).
3. This wire must be connected to furnace sheet metal for control to prove flame.
4. Symbols are electrical representation only.
5. Solid lines inside PCB are printed circuit board conductors and are not included in legend.
6. Replace only with a 3 amp fuse.
7. Inducer (IDM) and blower (BLWM) motors contain internal auto-reset thermal overload switches (OL).
8. Neutral connections are interchangeable within the NEUTRAL connector block.
9. Blower motor speed selections are for average conditions, see installation instructions for details on optimum speed selection.
10. Factory connected when BVSS (Chimney Adapter Accessory Kit) is not installed.
11. Factory connected when LGPS is not used.
12. Ignition-lockout will occur after four consecutive unsuccessful trials-for-ignition. Control will auto-reset after three hours.
13. Blower-on delay: gas heating 25 seconds, cooling or heat pump 2 seconds.
14. Blower-off delay: gas heating selections are 90, 120, 150 or 180 seconds, cooling or heat pump 90 seconds or 5 seconds when J2 is cut.
15. Yellow Speed Tap on 4 speed motor only.

LEGEND

BHT/CLR	BLOWER MOTOR SPEED CHANGE RELAY, SPDT
BLWR	BLOWER MOTOR RELAY, SPST-(N.O.)
BLWM	BLOWER MOTOR, PERMANENT-SPLIT-CAPACITOR
BVSS	BLOCKED VENT SHUTOFF SWITCH, MANUAL-RESET,SPST-(N.C.)
CAP	CAPACITOR
CPU	MICROPROCESSOR AND CIRCUITRY
DSS	DRAFT SAFE GUARD SWITCH, AUTO-RESET, SPST-(N.C.)
EAC 1 AMP	ELECTRONIC AIR CLEANER CONNECTION (EAC & HUM 1 AMP MAX.)
FRS 1, 2	FLAME ROLLOUT SWITCH-MANUAL RESET, SPST-(N.C.)
FSE	FLAME-PROVING ELECTRODE
FU 1	FUSE, 3 AMP AUTOMOTIVE BLADE TYPE, FACTORY INSTALLED
FU 2	FUSE OR CIRCUIT BREAKER CURRENT INTERRUPT DEVICE (FIELD INSTALLED & SUPPLIED)
GND	EQUIPMENT GROUND
GV	GAS VALVE-REDUNDANT
GVR	GAS VALVE RELAY, SPST-(N.O.)
HSI	HOT SURFACE IGNITER (115VAC)
HSIR	HOT SURFACE IGNITER RELAY, SPST-(N.O.)
HUM 24VAC	24VAC HUMIDIFIER CONNECTION (0.5 AMP MAX.)
HUM	LINE VOLTAGE HUMIDIFIER CONNECTION (EAC & HUM 1 AMP MAX.)
IDM	INDUCED DRAFT MOTOR, SHADED-POLE
IDR	INDUCED DRAFT MOTOR RELAY, SPST-(N.O.)
ILK	BLOWER ACCESS PANEL INTERLOCK SWITCH, SPST-(N.O.)
J1	BLOWER - OFF DELAY JUMPER SELECTOR - HEATING
J2	BLOWER - OFF DELAY JUMPER - COOLING
JB	JUNCTION BOX
LED	LIGHT-EMITTING DIODE FOR STATUS CODES - GREEN
LGPS	LOW GAS PRESSURE SWITCH, SPST-(N.O.)
LS1, 2	LIMIT SWITCH, AUTO-RESET, SPST-(N.C.)
OL	AUTO-RESET INTERNAL MOTOR OVERLOAD TEMPERATURE SWITCH (N.C.)
PCB	PRINTED CIRCUIT BOARD CONTROL
P1	11-CIRCUIT PCB CONNECTOR
P2	2-CIRCUIT CONNECTOR
P3	2-CIRCUIT HSI CONNECTOR
PRS	PRESSURE SWITCH, SPST-(N.O.)
TEST/TWIN	COMPONENT TEST & TWIN TERMINAL
TRAN	TRANSFORMER-115VAC/24VAC
●	JUNCTION
○	UNMARKED TERMINAL
■	PCB CONTROL TERMINAL
—	FACTORY WIRING (115VAC)
— —	FACTORY WIRING (24VAC)
- - -	FIELD WIRING (115VAC)
= = =	FIELD WIRING (24VAC)
	CONDUCTOR ON CONTROL PCB
	FIELD WIRING SCREW TERMINAL
	FIELD EARTH GROUND
	EQUIPMENT GROUND
	FIELD SPLICE
	PLUG RECEPTACLE

Figure 49 — Troubleshooting Guide

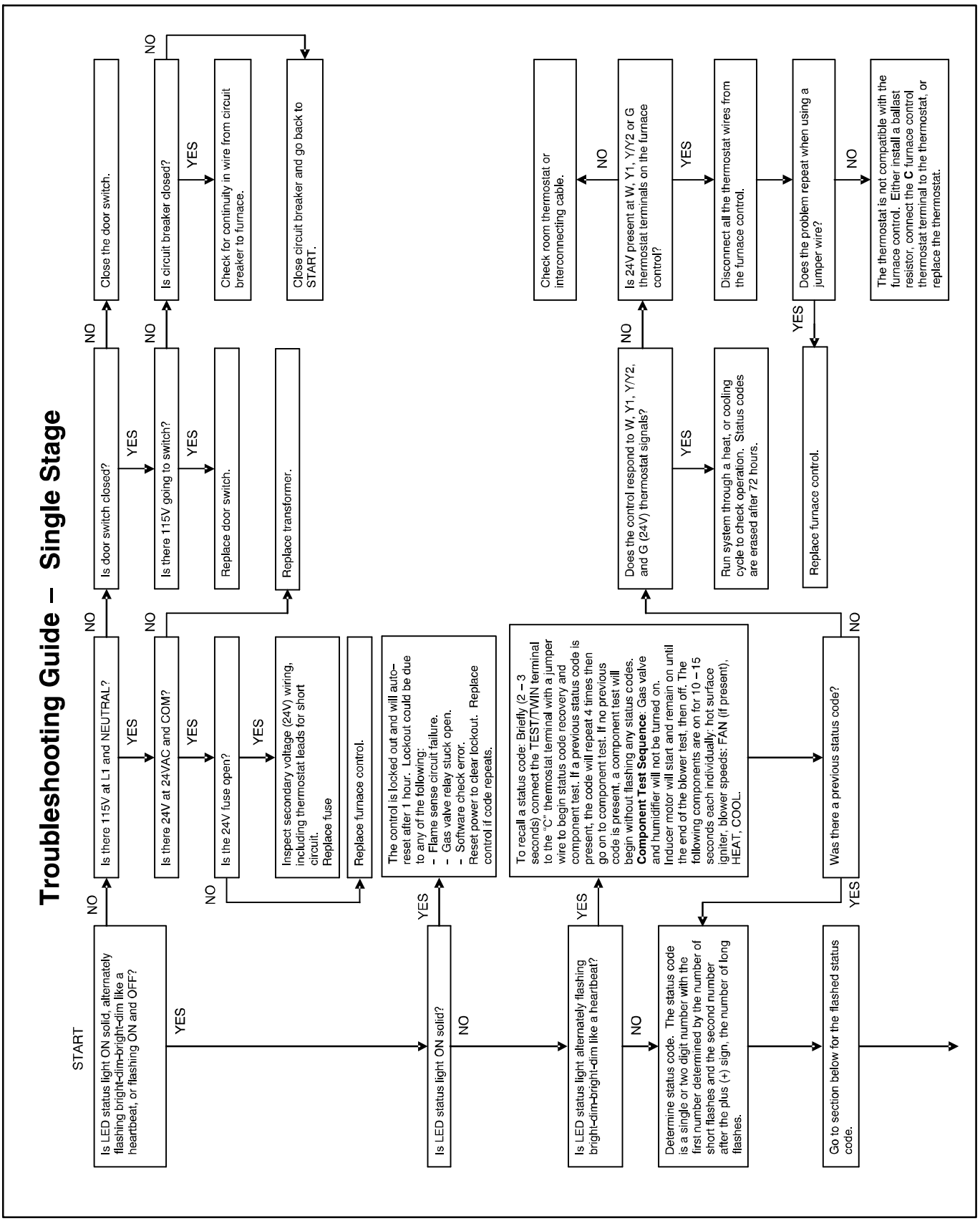

Specifications are subject to change without notice.

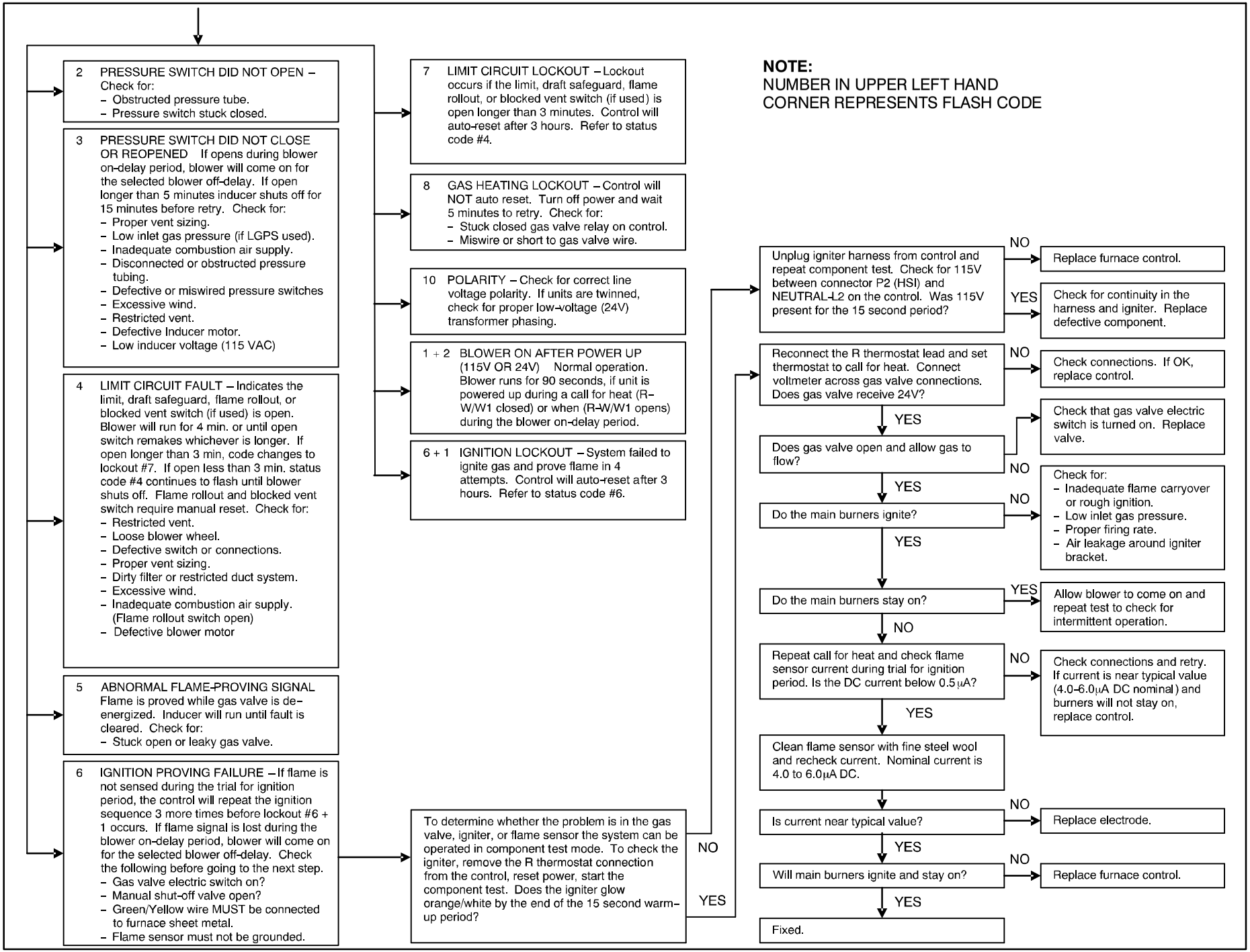

Specifications are subject to change without notice.

PARTS REPLACEMENT INFORMATION GUIDE

CASING GROUP

Outer door
Blower door
Top filler plate
Bottom filler plate
Bottom enclosure

ELECTRICAL GROUP

Control bracket
Junction box
Limit switch(es)
Circuit board
Door switch
Transformer
Wiring harness 115v
Wiring harness 24v

BLOWER GROUP

Blower housing
Blower cutoff
Blower motor
Blower wheel
Capacitor (where used)
Capacitor strap (where used)
Grommet
Power choke (where used)

GAS CONTROL GROUP

Manifold
Burner assembly
Orifice
Flame sensor
Hot surface igniter
Gas valve
Manual reset limit switches

HEAT EXCHANGER GROUP

Heat exchanger cell
Cell panel
Lox NOx baffle (California models only)

INDUCER GROUP

Housing assembly
Pressure switch
Inducer motor
Inducer wheel
Vent elbow assembly

MODEL NUMBER IDENTIFICATION GUIDE

DIGIT POSITION	1	2	3	4	5	6,7,8	9,10	11,12	13	14
	N	**8**	**M**	**S**	**L**	**045**	**14**	**12**	**A**	**1**

N = Non–Branded

8 = 80% AFUE — **EFFICIENCY**

M = Multiposition — **POSITION**

V = Variable Speed Blower Motor – ECM
X = ECM Blower Motor
S = Single–stage
T = Two–stage — **TYPE**

N = Standard
L = Low Nox — **FEATURE**

045 = 44,000 BTU/hr
070 = 66,000 BTU/hr
090 = 88,000 BTU/hr
110 = 110,000 BTU/hr
132 = 132,000 BTU/hr
155 = 154,000 BTU/hr — **HEAT INPUT**

14 = 14–3/16”
17 = 17–1/2”
21 = 21”
24 = 24–1/2” — **CABINET WIDTH**

08 = 800 CFM (max)
12 = 1200 CFM (max)
14 = 1400 CFM (max)
16 = 1600 CFM (max)
20 = 2000 CFM (max)
22 = 2200 CFM (max) — **NOMINAL MAXIMUM COOLING AIRFLOW @ .5 IN.W.C.**

SALES (MAJOR) REVISION DIGIT

ENGINEERING (MINOR) REVISION DIGIT

TO OBTAIN INFORMATION ON PARTS: Consult your installing dealer or the classified section of your local telephone directory under the “Heating Equipment“ or “Air Conditioning Contractors and Systems” headings for dealer listing by brand name, or contact:

International Comfort Products
Consumer Relations Department
P.O. Box 128
Lewisburg, TN 37091, USA
931–270–4100

Have available the product/model number and the serial number located on the unit rating plate to ensure correct replacement parts.

WARNING: Improper installation, adjustment, alteration, service, or maintenance can cause personal injury, property damage, or death. Consult a qualified installer, service agency, or your local gas supplier for information or assistance. The qualified installer or service agency must use only factory–authorized replacement parts, kits, or accessories when modifying this product.

Specifications are subject to change without notice.
Copyright 2013 International Comfort Products
Lewisburg, TN 37091 USA