N92ESN
Up to 92.1% AFUE, Single-Stage, Multi-Speed ECM, Condensing Gas Furnace

Arcoaire®
Air Conditioning & Heating

Product Specifications

A200105

Illustrations and photographs are only representative. Some product models may vary.

⚠ WARNING

CARBON MONOXIDE POISONING AND FIRE HAZARD

Failure to follow this warning could result in personal injury, death, and/or property damage.

This furnace is not designed for use in recreation vehicles or outdoors. This furnace is designed for use in manufactured (Mobile) homes when an optional Mobile Home accessory kit is installed.

Failure to follow this warning could result in personal injury, death, and/or property damage.

CERTIFIED ® DESIGN CERTIFIED ® ENERGY STAR

AHRI CERTIFIED™ www.ahridirectory.org

Use of the AHRI Certified TM Mark indicates a manufacturer's participation in the program. For verification of certification for individual products, go to www.ahridirectory.org .

Certified System ™ ISO 9001 Quality

A200326

EASIER TO SELL

- Up to 92.1% AFUE in upflow, horizontal, and downflow positions
- Single-stage gas valve and fixed-speeds, constant torque ECM.
- Cabinet air leakage less than 2.0% at 1.0 in. W.C. and cabinet air leakage less than 1.4% at 0.5 in. W.C. when tested in accordance with ASHRAE standard 193
- Approved for Twinning applications with accessory kit (601714, 801716, 802120, 1002120, 1202420 models, only).
- Approved for Manufactured Housing/Mobile Home applications with accessory (order separately)
- NOx emissions less than 40 ng/J; can be installed in California air quality management districts with a 40 ng/J NOx emission limit.

TOUGHER

- Flame roll-out sensors standard
- Adjustable heating blower OFF delay
- Factory set blower ON delay
- RPJ® primary heat exchanger
- Stainless steel secondary heat exchanger
- High temperature limit control designed to prevent overheating
- Direct ignition with Silicon Nitride ignitor
- High quality, corrosion-resistant, prepainted steel cabinet

EASIER TO INSTALL AND SERVICE

- Direct vent (2-pipe), single-pipe venting or ventilated combustion air
- 24 VAC humidifier terminal & electronic air cleaner terminal
- 35” (889mm) high, for ease of installation
- Simplified, factory installed internal condensate drain system
- Quarter turn knobs for easy door removal and secure attachment
- Convertible to propane with gas conversion accessory kit
- Four position - upflow/downflow/horizontal (left/right) installation
- Twelve different venting configurations
- Through the casing flue pipe for counterflow or horizontal applications with accessory (order separately)
- Concentric vent available
- Self diagnostics with super bright LED
- Slide out heat exchanger and blower assembly

LIMITED WARRANTY*

- 20 year heat exchanger limited warranty
- 5 year parts limited warranty
  - With timely registration, an additional 5 year parts limited warranty

*For residential applications only. See warranty certificate for complete details and restrictions, including warranty coverage for other applications.

Model Number	Input (BTUH)	Efficiency AFUE		Cooling Capacity CFM range @ .5 in. w.c. (125 Pa)	Dimensions H x W x D Inches (Millimeters)	Shipping Wt. Lbs (Kg)
		Upflow/Hz	Downflow			
N92ESN0401410A	40,000	92.1%	92.1%	290 - 985	35 x 14-3/16 x 29-1/2 (889 x 361 x 750)	112 (50.8)
N92ESN0401712A	40,000	92.1%	92.1%	350 - 985	35 x 17-1/2 x 29-1/2 (889 x 445 x 750)	122.5 (55.6)
N92ESN0601412A	60,000	92.1%	92.1%	450 - 1035	35 x 14-3/16 x 29-1/2 (889 x 361 x 750)	122 (55.3)
N92ESN0601714A	60,000	92.1%	92.1%	535 - 1190	35 x 17-1/2 x 29-1/2 (889 x 445 x 750)	132 (59.9)
N92ESN0801716A	80,000	92.1%	92.1%	450 - 1365	35 x 17-1/2 x 29-1/2 (889 x 445 x 750)	142 (64.4)
N92ESN0802120A	80,000	92.1%	92.1%	940 - 1815	35 x 21 x 29-1/2 (889 x 533 x 750)	150 (68.0)
N92ESN1002120A	100,000	92.1%	92.1%	945 - 1850	35 x 21 x 29-1/2 (889 x 533 x 750)	160 (72.6)
N92ESN1002122A	100,000	92.1%	92.1%	1285 - 2045	35 x 21 x 29-1/2 (889 x 533 x 750)	162 (73.7)
N92ESN1202420A	120,000	92.1%	92.1%	805 - 1850	35 x 24-1/2 x 29-1/2 (889 x 622 x 750)	183 (83.0)

DIMENTIONAL DRAWING

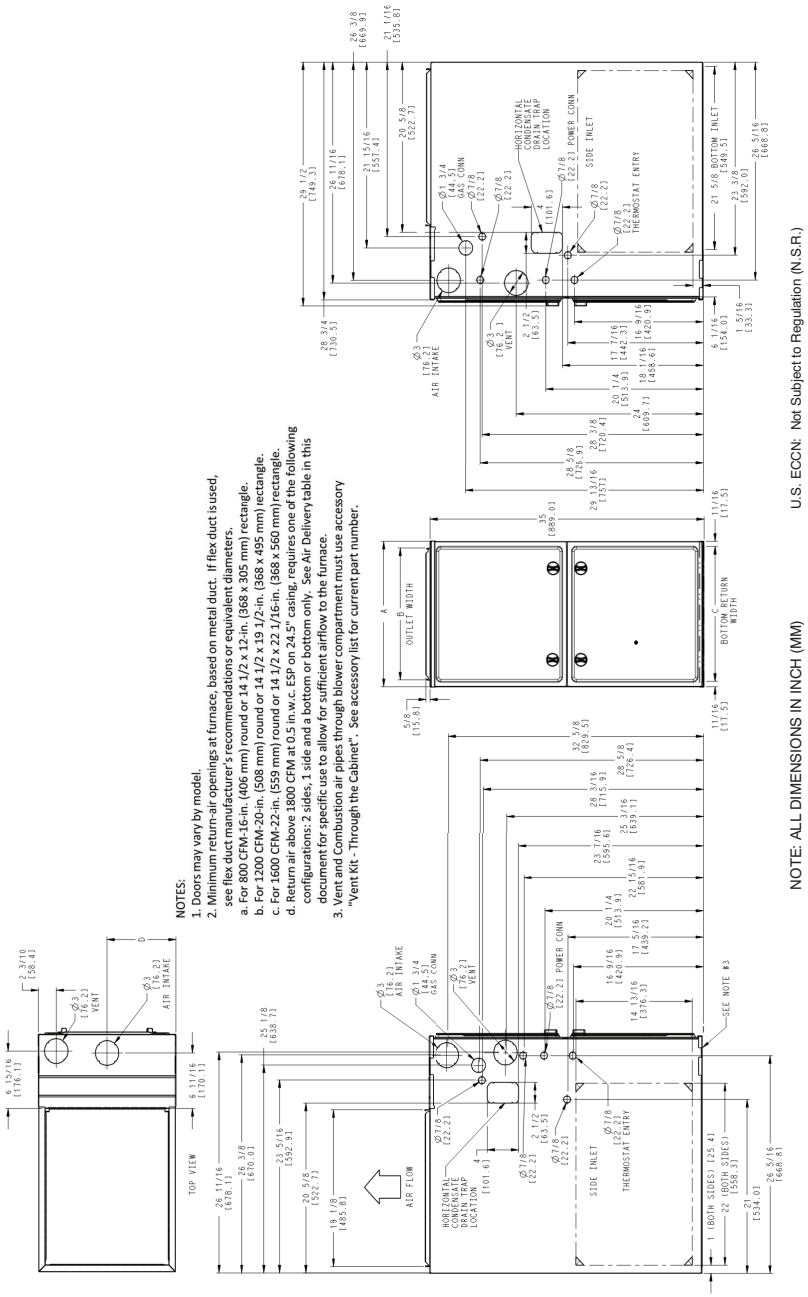

A200327

FURNACE SIZE	A	B	C	D	SHIP WT.
	CABINET WIDTH	OUTLET WIDTH	BOTTOM INLET WIDTH	AIR INTAKE	LB (KG)
0401410	14-3/16 (361)	12-1/2 (319)	12-9/16 (322)	7-1/8 (181)	112.0 (50.8)
0401712	17-1/2 (445)	15-7/8 (403)	16 (406)	8-3/4 (222)	122.5 (55.6)
0601412	14-3/16 (361)	12-1/2 (319)	12-9/16 (322)	7-1/8 (181)	122.0 (55.3)
0601714	17-1/2 (445)	15-7/8 (403)	16 (406)	8-3/4 (222)	132.0 (59.9)
0801716	17-1/2 (445)	15-7/8 (403)	16 (406)	8-3/4 (222)	142.0 (64.4)
0802120	21 (533)	19-3/8 (492)	19-1/2 (495)	10-1/2 (267)	150.0 (68.0)
1002120	21 (533)	19-3/8 (492)	19-1/2 (495)	10-1/2 (267)	160.0 (72.6)
1002122	21 (533)	19-3/8 (492)	19-1/2 (495)	10-1/2 (267)	162.5 (73.7)
1202420	24-1/2 (622)	22-7/8 (581)	23 (584)	12-1/4 (311)	183.0 (83.0)

For California Residents:

If installed with a manufactured (mobile) home conversion kit in SCAQMD: This furnace does not meet the SCAQMD Rule 1111 14 ng/J NOx emission limit, and thus is subject to a mitigation fee of up to $450. This furnace is not eligible for the Clean Air Furnace Rebate Program: www.CleanAirFurnaceRebate.com

MODEL NUMBER NOMENCLATURE

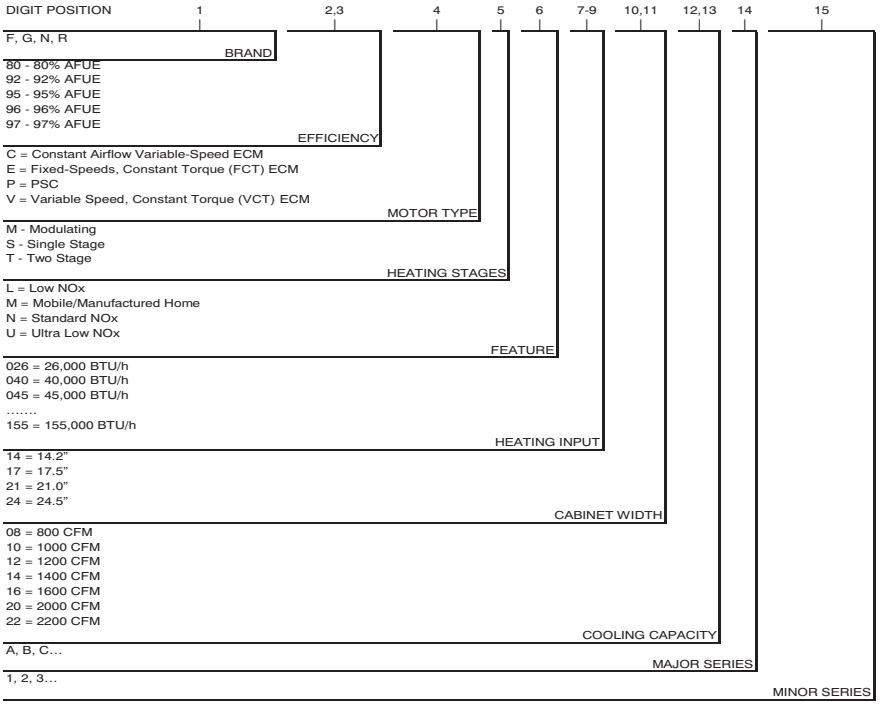

A190043

FURNACE COMPONENTS

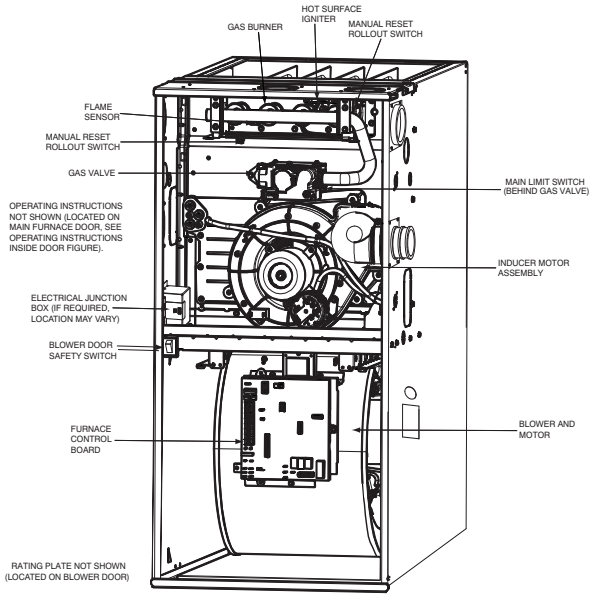

A190145

MINIMUM CLEARANCES TO COMBUSTIBLE MATERIALS

POSITION	CLEARANCE
Rear	0 (0 mm)
Front (Combustion air openings in furnace and in structure)	1 in. (25 mm)
Required for service*	24 in. (610 mm)†
All Sides of Supply Plenum*	1 in. (25 mm)
Sides	0 (0 mm)
Vent	0 (0 mm)
Top of Furnace	1 in. (25 mm)

*. Consult your local building codes
†. Recommended

PHYSICAL DATA

FURNACE SIZE		0401410	0401712	0601412	0601714	0801716	0802120	1002120	1002122	1202420
HEATING AND CAPACITY AND EFFICIENCY										
Input (BTUH)		40,000	40,000	60,000	60,000	80,000	80,000	100,000	100,000	120,000
Output (BTUH)		37,000	37,000	56,000	56,000	75,000	75,000	93,000	93,000	111,000
Certified Temperature Rise Range ºF (ºC)		35 - 65 (19 - 36)	35 - 65 (19 - 36)	35 - 65 (19 - 36)	35 - 65 (19 - 36)	40 - 70 (22 - 39)	35 - 65 (19 - 36)	40 - 70 (22 - 39)	40 - 70 (22 - 39)	45 - 75 (25 - 42)
Airflow Capacity and Blower Data										
Rated External Static Pressure (in. w.c.)	Heating	0.1	0.10	0.12	0.15	0.15	0.15	0.20	0.20	0.20
	Cooling	0.50	0.50	0.50	0.50	0.50	0.50	0.50	0.50	0.50
Airflow Delivery @ Rated ESP (CFM)	Heating	765	740	1100	1000	1350	1460	1675	1630	1735
	Cooling	985	985	1035	1190	1370	1815	1855	2045	1800
Cooling Capacity (tons) @ 400, 350 CFM/ton	400 CFM/ton	2	2.50	2.50	3	3.50	4.50	4.50	5.00	4.50
	350 CFM/ton	2.50	3	3	3.50	4	5	5	5.5	5
Direct-Drive Motor Type		Electronically Commutated Motor (ECM)								
Direct-Drive Motor HP		1/2	1/2	1/2	1/2	1/2	3/4	3/4	1	3/4
Motor Full Load Amps		6.4	6.4	6.4	6.4	6.4	8.8	8.8	12.0	8.8
RPM Range		600 - 1200								
Speed Selections		5								
Blower Wheel Dia x Width	in.	11 x 7	11 x 8	11 x 7	11 x 8	11 x 8	11 x 10	11 x 10	11 x 10	11 x 11
Air Filtration System		Field Supplied Filter								
Filter Used for Certified Watt Data		325531-40*								
ELECTRICAL DATA										
Input Voltage	Volts-Hertz-Phase	115-60-1								
Operating Voltage Range	Min-Max	104-127								
Maximum Input Amps	Amps	7.10	7.10	7.20	7.20	7.20	9.60	9.70	12.90	9.70
Unit Ampacity	Amps	9.80	9.80	9.90	9.90	9.90	12.90	13.00	17.00	13.00
Minimum Wire Size	AWG	14	14	14	14	14	14	14	12	14
Maximum Wire Length @ Minimum Wire Size	Feet	37	37	37	37	37	28	28	33	28
	(M)	(11.50)	(11.50)	(11.40)	(11.40)	(11.40)	(8.70)	(8.70)	(10.30)	(8.70)
Max. Fuse/Ckt Bkr (Time-Delay Type Recommended)	Amps	15	15	15	15	15	15	15	20	15
Transformer Capacity (24vac output)		40 VA								
External Control Power Available	Heating	27.9 VA								
	Cooling	34.6 VA								
CONTROLS										
Gas Connection Size		1/2” - NPT								
Burners (Monoport)		2	2	3	3	4	4	5	5	6
Gas Valve (Redundant)	Manufacturer	White Rodgers™								
Minimum Inlet Gas pressure (in. w.c.)		4.50								
Maximum Inlet Gas pressure (in. w.c.)		13.60								
Manufactured (Mobile) Home Kit		See Accessory Listing								
Ignition Device		Silicon Nitride								
Heating Blower Control (Heating Off-Delay)		Adjustable: 90, 120, 150, 180 seconds								
Cooling Blower Control (Time Delay Relay)		90 seconds								
Communication System		none								
Thermostat Connections		Com 24V, R, W, G, Y								
Accessory Connections		EAC (115vac); HUM (24vac); 1-stg AC (via Y)								

Manufacturer reserves the right to change, at any time, specifications and designs without notice and without obligations.

AIR DELIVERY - CFM (With Filter)

FURNACE SIZE	SPEED TAPS	Function	EXTERNAL STATIC PRESSURE (IN.W.C.)									
			0.10	0.20	0.30	0.40	0.50	0.60	0.70	0.80	0.90	1.00
0401410	Gray	Cooling. Do not use for heating.	1120	1085	1055	1015	985	950	915	880	850	815
	Yellow	Cooling. Do not use for heating.	925	885	850	810	775	735	695	660	620	580
	Blue [3]	Heating or alt Cooling	765	725	685	640	605	565	525	475	430	375
	Orange [3]	Alt Cooling or alt Heating	750	710	665	625	585	545	500	455	405	350
	Red [3, 7]	Alt Cooling. Do not use for heating.	510	435	400	345	290	230	190	145	-	-
0401712	Gray	Cooling. Do not use for heating.	1120	1090	1055	1020	985	950	915	875	840	805
	Yellow	Cooling. Do not use for heating.	910	880	845	800	760	720	680	640	595	555
	Orange	Alt Cooling or alt Heating	835	795	760	720	680	630	585	540	505	475
	Blue [3]	Heating or alt Cooling	740	700	660	610	565	520	475	440	405	365
	Red [3, 7]	Alt Cooling. Do not use for heating.	555	500	445	395	350	315	260	205	-	-
0601412	Gray	Cooling. Do not use for heating.	1165	1140	1110	1080	1035	1000	960	920	870	825
	Blue	Heating or alt Cooling	1105	1085	1050	1010	975	930	890	845	795	755
	Yellow	Alt Cooling or alt Heating	1040	1000	960	920	880	840	785	740	690	640
	Orange [3]	Alt Cooling or alt Heating	840	795	750	705	655	610	555	500	450	395
	Red [3]	Alt Cooling. Do not use for heating.	745	615	555	510	450	390	340	290	230	195
0601714	Gray	Cooling. Do not use for heating.	1335	1300	1275	1230	1190	1135	1090	1040	985	925
	Yellow	Alt Cooling or alt Heating	1170	1135	1095	1045	995	940	890	825	770	700
	Blue [3]	Heating or alt Cooling	1010	965	910	855	800	735	675	615	555	505
	Orange [3]	Alt Cooling or alt Heating	960	905	855	800	740	675	615	555	505	460
	Red [3]	Alt Cooling. Do not use for heating.	910	735	675	605	535	485	430	375	330	265
0801716	Gray	Cooling. Do not use for heating	1545	1505	1460	1420	1365	1320	1275	1225	1180	1135
	Blue	Heating or alt Cooling	1375	1330	1275	1225	1175	1125	1075	1025	970	920
	Yellow [3]	Alt Cooling or alt Heating	1195	1140	1090	1040	985	930	875	815	765	705
	Orange [3]	Alt Cooling. Do not use for heating.	1015	955	900	845	780	730	670	615	550	490
	Red [3, 7]	Alt Cooling. Do not use for heating.	945	735	575	520	450	375	325	260	-	-
0802120	Gray [5, 6]	Cooling. Do not use for heating.	2020	1965	1920	1865	1815	1760	1705	1650	1595	1545
	Yellow	Alt Cooling or alt Heating	1650	1590	1535	1475	1425	1370	1315	1260	1205	1145
	Blue	Heating or alt Cooling	1495	1430	1365	1310	1260	1200	1145	1085	1030	970
	Orange	Alt Cooling or alt Heating	1420	1355	1290	1235	1175	1120	1060	1005	945	890
	Red [3]	Alt Cooling. Do not use for heating.	1200	1120	1060	995	940	875	810	750	685	625
1002120	Gray [5, 6]	Cooling. Do not use for heating.	2060	2010	1955	1905	1850	1800	1750	1690	1630	1565
	Blue	Heating or alt Cooling	1730	1675	1620	1565	1510	1455	1385	1325	1270	1210
	Yellow	Alt Cooling or alt Heating	1685	1630	1570	1515	1460	1410	1345	1280	1225	1170
	Orange [3]	Alt Cooling or alt Heating	1445	1370	1310	1250	1185	1115	1055	1005	950	875
	Red [3]	Alt Cooling. Do not use for heating.	1235	1155	1090	1020	945	900	835	755	690	635
1002122	Gray [5, 6]	Cooling. Do not use for heating.	2205	2160	2120	2085	2045	2005	1965	1925	1885	1840
	Yellow [5, 6]	Alt Cooling. Do not use for heating.	2120	2080	2035	1995	1955	1915	1875	1830	1790	1745
	Orange	Alt Cooling or alt Heating	1800	1755	1710	1665	1615	1570	1520	1470	1420	1375
	Blue	Heating or alt Cooling	1680	1630	1580	1535	1485	1435	1380	1330	1275	1225
	Red [3]	Alt Cooling or alt Heating	1500	1445	1390	1340	1285	1225	1170	1110	1055	1000
1202420	Gray [5, 6]	Cooling. Do not use for heating.	2070	2020	1965	1910	1850	1790	1725	1660	1605	1550
	Blue	Heating or alt Cooling	1795	1735	1680	1620	1560	1495	1440	1375	1315	1255
	Yellow [3]	Alt Cooling or alt Heating	1465	1400	1340	1270	1210	1150	1090	1030	950	880
	Orange [3]	Alt Cooling. Do not use for heating.	1295	1235	1165	1095	1030	970	905	825	760	700
	Red [3]	Alt Cooling. Do not use for heating.	1095	1020	945	875	805	730	660	585	525	465

NOTE:

1. Afilter is required for each return-air inlet. Airflow performance includes a 3/4-in. (19 mm) washable filter. See accessory list in Specification Product Data sheet. To determine airflow performance without this filter, assume an additional 0.1 in. w.c. available external static pressure.
2. **ADJUST THE BLOWER SPEED TAPS AS NECESSARY FOR THE PROPER AIR TEMPERATURE RISE FOR EACH INSTALLATION.**
3. The "Function" column identifies which speed taps can be used for heating. Shaded areas indicate that this airflow range is **BELOW THE RANGE ALLOWED FOR HEATING OPERATION. THESE AIRFLOW RANGES MAY ONLY BE USED FOR COOLING.**
4. If the same motor speed tap is needed for heating and cooling, a Jumper Wire accessory kit is available, see SpecificationProduct Data sheet for the current Jumper Wire accessory part number. Reference the "Start-up, Adjustments, and Safety Check" section for further Jumper Wire instructions.
5. Airflows over 1800 CFM require bottom return, two-side return, or bottom and side return. A minimum filter size of 20" x 25" (508 x 635 mm) is required.
6. For upflow applications, air entering from one side into both the side of the furnace and a return air base counts as a side and bottom return.
7. The "-" entry indicates an unstable operating condition.

ACCESSORIES

PART NUMBER	COMPONENT NAME	DESCRIPTION	0401410	0401712	0601412	0601714
NAHB00101CT	EXTERNAL TRAP KIT	CONDENSATE TRAP	X	X	X	X
NAHA00110DA	DRAIN ACCESSORY	1/2” CPVC to 3/4” PVC (10 PACK)	X	X	X	X
NAHA002CV	VENT TERMINATION KIT	2” CONCENTRIC VENT	X	X	X	X
NAHA001CV		3” CONCENTRIC VENT	-	-	X	X
NAHA00101VC	INTERNAL VENT KIT	THROUGH THE CABINET	X	X	X	X
NAHA00301VT	DIRECT VENT TERMINATION KIT	2” BRACKET	X	X	X	X
NAHA00401VT		3” BRACKET	-	-	X	X
NAHA00101CK	INLET AIR PIPE COUPLING	COUPLING FOR POLYPROPYLENE VENT SYSTEMS	X	X	X	X
NAHA00101HV	HORIZONTAL INSTALLATION KIT	TRAP GROMMET (DIRECT VENT APPLICATION ONLY	X	X	X	X
NAHA00101HH	FREEZE PROTECT KIT	CONDENSATE DRAIN LINE - TAPE	X	X	X	X
NAHA00201HH	CONDENSATE FREEZE PROTECTION KIT	CONDENSATE TRAP WITH HEAT PAD	X	X	X	X
NAHA01101SB	FLOOR BASE KIT	COMBUSTIBLE FLOOR	X	X	X	X
AGAGC9NPS01B*	GAS CONVERSION KIT	NATURAL TO PROPANE	X	X	X	X
AGAGC9PNS01B*	GAS CONVERSION KIT	PROPANE TO NATURAL	X	X	X	X
NAHC00101MH*	MANUFACTURED HOME KIT	GAS CONVERSION KIT	X	X	X	X
AGATWNDTE01A	TWINNING KIT - FCT ECM	OPERATION OF TWO IDENTICAL SIZE MODEL FURNACES	-	-	-	X
AGABLRJMP10A	BLOWER TAP KIT	BLOWER SPEED TAP JUMPER KIT	X	X	X	X
1188594†	GAS VALVE TOWER PORT ADAPTER KIT	ADAPTER FOR GAS VALVE	X	X	X	X
325531-402†	WASHABLE FILTER	3/4” X 16” x 25” WASHABLE FILTER	X	X	X	X
FHG1425-2†	EXTERNAL BOTTOM FILTER RACK	14-1/2” x 25” W/O FILTER	X	-	X	-
FHG1625-2†		16” x 25” W/O FILTER	-	X	-	X
NAHB00101CA	COIL ADAPTER KIT	WITH NO OFFSET	X	X	X	X
NAHB00201CA		WITH SINGLE OFFSET	X	X	X	X
NAHB00301CA		WITH DOUBLE OFFSET	X	X	X	X
NAHA01401RA	RETURN AIR KIT	14-3/16” WIDE	X	-	X	-
NAHA01701RA		17-1/2” WIDE	-	X	-	X
NAHA001NK	CONDENSATE NEUTRALIZER KIT	NEUTRALIZES CONDENSATE	X	X	X	X

*. Factory authorized and filed installed. Gas conversion kits are CSA recognized.
†. Order through FAST Parts.
X = Accessory available

ACCESSORIES (continued)

PART NUMBER	COMPONENT NAME	DESCRIPTION	0801716	0802120	1002120	1002122	1202420
NAHB00101CT	EXTERNAL TRAP KIT	CONDENSATE TRAP	X	X	X	X	X
NAHA00110DA	DRAIN ACCESSORY	1/2” CPVC to 3/4” PVC (10 PACK)	X	X	X	X	X
NAHA002CV	VENT TERMINATION KIT	2” CONCENTRIC VENT	X	X	X	X	
NAHA001CV		3” CONCENTRIC VENT	X	X	X	X	X
NAHA00101VC	INTERNAL VENT KIT	THROUGH THE CABINET	X	X	X	X	X
NAHA00301VT	DIRECT VENT TERMINATION KIT	2” BRACKET	X	X	X	X	
NAHA00401VT		3” BRACKET	X	X	X	X	X
NAHA00101CK	INLET AIR PIPE COUPLING	COUPLING FOR POLYPROPYLENE VENT SYSTEMS	X	X	X	X	X
NAHA00101HV	HORIZONTAL INSTALLATION KIT	TRAP GROMMET (DIRECT VENT APPLICATION ONLY	X	X	X	X	X
NAHA00101HH	FREEZE PROTECT KIT	CONDENSATE DRAIN LINE - TAPE	X	X	X	X	X
NAHA00201HH	CONDENSATE FREEZE PROTECTION KIT	CONDENSATE TRAP WITH HEAT PAD	X	X	X	X	X
NAHA01101SB	FLOOR BASE KIT	COMBUSTIBLE FLOOR	X	X	X	X	X
AGAGC9NPS01B*	GAS CONVERSION KIT	NATURAL TO PROPANE	X	X	X	X	X
AGAGC9PNS01B*	GAS CONVERSION KIT	PROPANE TO NATURAL	X	X	X	X	X
NAHC00101MH*	MANUFACTURED HOME KIT	GAS CONVERSION KIT	X	X	X	X	X
AGATWNDTE01A	TWINNING KIT - FCT ECM	OPERATION OF TWO IDENTICAL SIZE MODEL FURNACES	X	X	X	-	X
AGABLRJMP10A	BLOWER TAP KIT	BLOWER SPEED TAP JUMPER KIT	X	X	X	X	X
1188594†	GAS VALVE TOWER PORT ADAPTER KIT	ADAPTER FOR GAS VALVE	X	X	X	X	X
325531-402†	WASHABLE FILTER	3/4” X 16” x 25” WASHABLE FILTER	X	-	-	-	-
325531-403†		3/4” X 20” x 25” WASHABLE FILTER	-	X	X	X	-
325531-404†		3/4” X 24” x 25” WASHABLE FILTER	-	-	-	-	X
FHG1625-2†	EXTERNAL BOTTOM FILTER RACK	16” x 25” W/O FILTER	X	-	-	-	-
FHG2025-2†		20” x 25” W/O FILTER	-	X	X	-	-
FHG2424-2†		24-1/2” x 24” W/O FILTER	-	-	-	X	X
NAHB00101CA	COIL ADAPTER KIT	WITH NO OFFSET	X	X	X	X	X
NAHB00201CA		WITH SINGLE OFFSET	X	X	X	X	X
NAHB00301CA		WITH DOUBLE OFFSET	X	X	X	X	X
NAHA01401RA	RETURN AIR KIT	14-3/16” wide	-	-	-	-	-
NAHA01701RA		17-1/2” wide	X	-	-	-	-
NAHA02101RA		21” wide	-	X	X	X	-
NAHA02401RA		24-1/2” wide	-	-	-	-	X
NAHA001NK	CONDENSATE NEUTRALIZER KIT	NEUTRALIZES CONDENSATE	X	X	X	X	X

*. Factory authorized and filed installed. Gas conversion kits are CSA recognized.
†. Order through FAST Parts.
X = Accessory available

ORIFICES

Part Number	Gas Type	Orifice Size
1185612	Natural	42
1176928	Natural	43
1185574	Natural	44
1177213	Natural	45

Part Number	Gas Type	Orifice Size
1183809	Natural	46
1185613	Natural	47
1185614	Natural	48

Part Number	Gas Type	Orifice Size
1184256	Propane	54
1185615	Propane	55
1185616	Propane	56
1185617	Propane	1.25 mm
1185618	Propane	1.30 mm

Manufacturer reserves the right to change, at any time, specifications and designs without notice and without obligations.

© 2021 Carrier. All rights reserved.

Manufacturer reserves the right to change, at any time, specifications and designs without notice and without obligations.