PHM4
13.4 SEER2 Single Packaged Heat Pump System with R-454B Refrigerant
Single Phase
2 to 5 Nominal Tons (024-060)

Product Data

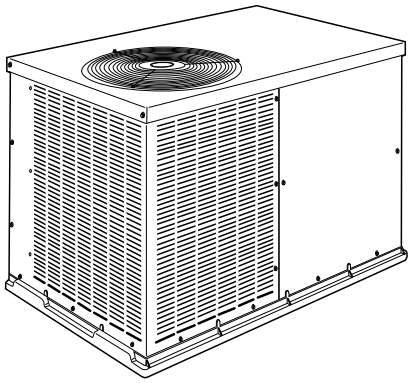

A10165

024-036 Size

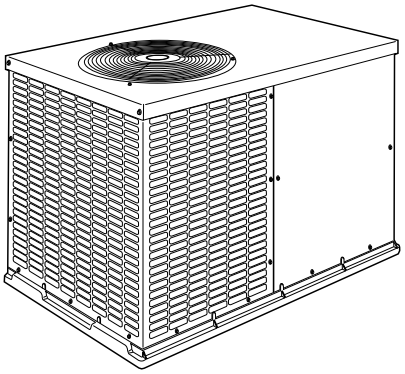

A150067

042-060 Size

Fig. 1 – Unit PHM4

Single-Packaged Heat Pump Units with:

- Easy installation design
- Corrosion-proof unit base
- Class leading sound ratings
- Sloped drain for improved indoor air quality
- Scroll compressors
- Front and side service access
- Louvered panel coil protection
- Aluminum coil
- Cabinet air leakage less than 2.0% at 1.0 in. W.C. and cabinet air leakage less than 1.4% at 0.5 in W.C. when tested in accordance with ASHRAE standard 193
- Refrigerant leak detection dissipation system for added safety

Features/Benefits

This unit is a packaged heat pump for manufactured housing, residential, and light commercial applications. Factory assembled package is a compact, horizontal supply and return unit, combining easy installation and maintenance with efficient performance.

R-454B is the latest choice of refrigerant to help meet the 2025 GWP requirement. This unit is designed and tested with R-454B and contains a dissipation system.

EASY TO INSTALL—The units are lightweight, compact single package units that are easy to handle. Every size unit has an identical 32 by 51-in. (813 by 1295 mm) footprint to make job site planning simple. The efficient design uses less sheet metal and makes this unit lighter than competitive units. The unit can be easily positioned on the job site with the hand-holds built into the unit basepan.

AERODYNAMIC FAN BLADE DESIGN reduces overall sound by up to 3dBA; as low as 70dBA.

SERVICE ACCESS—The units are designed to be serviced from both front and side. Routine maintenance tasks, such as coil cleaning, are sped up with the multiple side panels design.

CORROSION PROOF UNIT BASE—The unit features a tough, high-tech, single-piece composite material unit base with an integrated drain. The composite material eliminates the potential problem of rust and premature replacement which are common with standard metal pans. Each unit base is sloped to eliminate standing water. This feature minimizes the amount of standing water inside the unit, which limits mold and mildew growth.

DURABLE STEEL CABINET—The watertight construction and corrosion-resistant finish will keep it looking like new for years. A specialized paint treatment process ensures quality protection against the elements. A compact, low-profile design utilizes a louvered coil enclosure for maximum protection against hail damage and vandalism.

SCROLL COMPRESSORS—Each unit comes standard with a scroll compressor. Each scroll compressor is hermetically sealed against contamination to help promote longer life and dependable operation. All scroll compressors have internal high-pressure and overcurrent protection.

COIL EFFICIENCY—Indoor and outdoor coils are computer designed for optimum heat transfer and cooling efficiency.

DEFROST SYSTEM—The system provides time/ temperature-based defrost cycles to maintain unit efficiency. This highly reliable system monitors coil temperature and initiates a defrost cycle only if it is required. The defrost cycle ends as soon as defrosting is complete.

ACCESSORY ELECTRIC HEATERS—A variety of accessory electric heaters are available for these units. These heaters are comprised of a separate heater module mounted on the blower inlet and remote mounted controls located in the unit control box. Single point electrical connections are provided for powering both the heater and the unit.

START COLLARS—Start collars are provided with each unit to provide easy connection to the structure ductwork.

DEPENDABLE COMPONENTS—Direct-drive, multi-speed blower motor is standard on all models.

DIRECT-DRIVE, PSC OUTDOOR-FAN MOTORS are designed to help reduce energy consumption and provide for cooling operation down

to 40°F (4.4°C). It's high efficiency design ensures high performance with most duct systems.

REFRIGERANT SYSTEM is designed to provide dependability. Liquid refrigerant filter driers are used to promote clean, unrestricted operation. Each unit leaves the factory with a non-ozone depleting and low global warming potential R-454B refrigerant charge. Refrigerant service connections make checking operating pressure easier. Factory-installed leak detection dissipation system for added safety.

Limited Warranty*

- Default 5-year parts limited warranty (including compressor and coil)
  - 10-year parts limited warranty (including compressor and coil) with timely registration. Equipment must be registered within 90 days of original installation, except in jurisdictions where warranty benefits cannot be conditioned on registration.

* Applies to original purchaser/homeowner and 5 years to subsequent owners.

Table of Contents

Features/Benefits 1
Model Number Nomenclature 2
AHRI* Capacities 3
Base Unit Dimensions—024-036 6
Base Unit Dimensions — 042-060 7
Selection Procedure 8
Performance Data 10
Typical Installation 20
Typical Connection Wiring Schematic 21
Controls 23
Application Data 23

Model Number Nomenclature

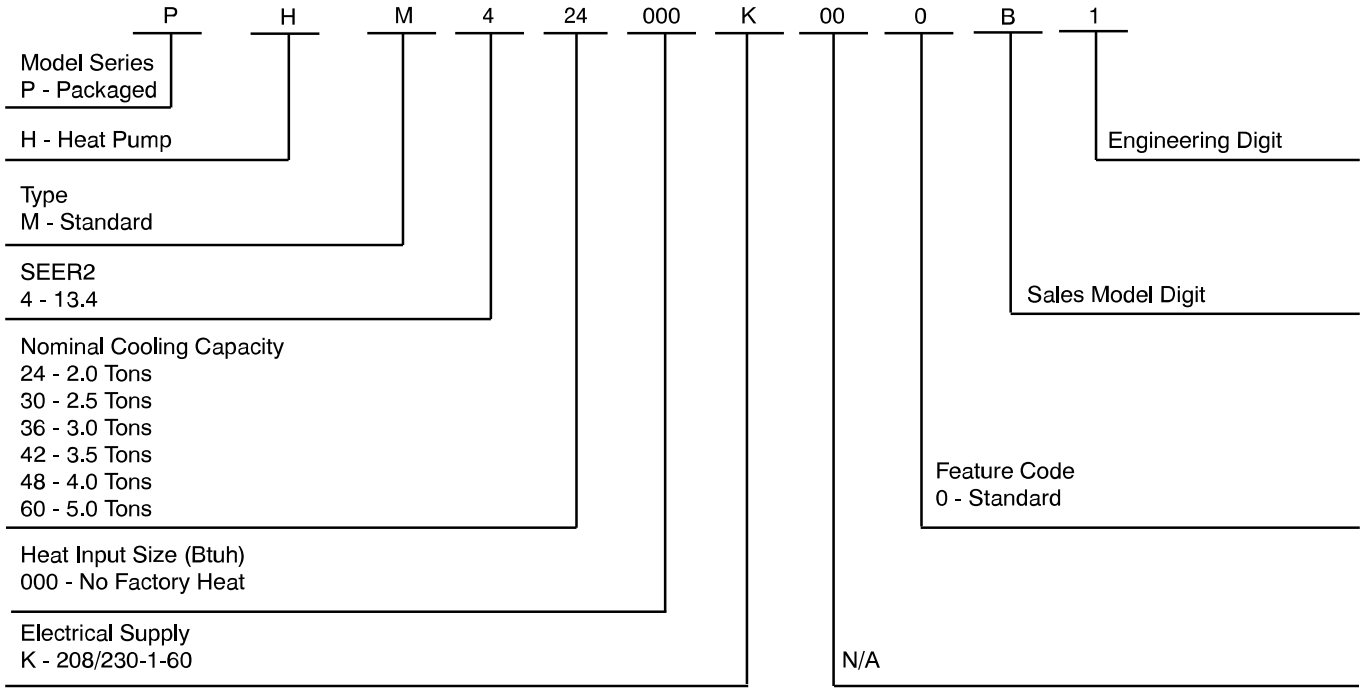

SAP ORDERING NO.	NOMINAL COOLING CAPACITY (Btuh)	VOLTS-PHASE (60 HZ)	APPROX SHIP WT (LB)
PHM424000K000B	24,000	208/230-1	303
PHM430000K000B	30,000	208/230-1	333
PHM436000K000B	36,000	208/230-1	335
PHM442000K000B	42,000	208/230-1	389
PHM448000K000B	48,000	208/230-1	408
PHM460000K000B	60,000	208/230-1	475

Manufacturer reserves the right to change, at any time, specifications and designs without notice and without obligations.

AHRI* Capacities

Cooling Capacities and Efficiencies

UNIT SIZE	NOMINAL TONS	STANDARD CFM	COOLING CAPACITY (Btuh) *	EER2†	SEER2†
024	2	800	24,000	11.05	13.4
030	2.5	1000	28,600	11.05	13.4
036	3	1200	35,200	11.05	13.4
042	3.5	1400	40,500	11.05	13.4
048	4	1600	45,500	11.05	13.4
060	5	1700	54,500	11.05	13.4

* Air Conditioning Heating & Refrigeration Institute
† Rated in accordance with U.S. Government DOE (Department of Energy) test procedures and/or AHRI 210/240.
EER2 - Energy Efficiency Ratio
SEER2 - Seasonal energy Efficiency Ratio
NOTES:
1. Ratings are net values, reflecting the effects of circulating fan heat.
2. Before purchasing this appliance, read important energy cost and efficiency information available from your retailer.

Heat Pump Heating Capacities and Efficiencies

UNIT SIZE	HEATING CAPACITY AT 47°F (8.3°C) (Btuh)*	COP @ 47°F (8.3°C)*	HEATING CAPACITY AT 17°F (-8.3°C) (Btuh)*	COP @ 17°F (-8.3°C)*	HSPF2*
024	23,000	3.7	12.300	2.2	6.7
030	28,400	3.7	15.700	2.3	6.7
036	32,600	3.7	17.200	2.1	6.7
042	39,000	3.6	21.800	2.2	6.7
048	45,000	3.3	25.400	2.2	6.7
060	56,500	3.6	31.400	2.3	6.7

*. Rated in accordance with U.S. Government DOE (Department of Energy) test procedures and/or AHRI 210/240
COP - Coefficient of Performance
HSPF - Heating Seasonal Performance Factor
Notes:
1. Ratings are net values, reflecting the effects of circulating fan heat
2. Before purchasing this appliance, read important energy cost and efficiency information available from your retailer.

Use of the AHRI Certified TM Mark indicates a manufacturer's participation in the program For verification of certification for individual products, go to www.ahridirectory.org.

A-Weighted Sound Power Level (dBA)

UNIT SIZE	STANDARD RATING (dBA)	TYPICAL OCTAVE BAND SPECTRUM (dBA without tone adjustment)						
		125	250	500	1000	2000	4000	8000
24	70	60	62	64	64	61	57	53
30	72	59	63	66	68	61	55	49
36	76	63	68	70	73	65	61	52
42	76	61	68	71	72	67	62	52
48	78	64	67	70	75	70	63	55
60	79	65	70	73	74	71	65	56

LEGEND
dBA - Sound Levels (decibels "A" weighting)
NOTE: Tested in compliance with AHRI 270 but not listed with AHRI.

Physical Data

UNIT SIZE	024	030	036	042	048	060
NOMINAL CAPACITY (ton)	2	2.5	3	3.5	4	5
SHIPPING WEIGHT (lb) (kg)	303 137.4	333 151.1	335 152.0	389 176.5	408 185.1	475 215.0
COMPRESSOR TYPE	SCROLL					
REFRIGERANT	R-454B					
REFRIGERANT QUANTITIY (lb) QUANTITY (kg)	5.80 2.6	6.75 3.1	4.75 2.2	6.5 2.9	8.25 3.7	10.50 4.8
OUTDOOR METERING DEVICE	Piston	TXV		Piston	TXV	Piston
ORIFICE ID (in.) (mm)	0.046 1.168	N/A	N/A	0.059 1.499	- -	0.070 1.778
MINIMUM CONDITIONED SPACE AREA (sq. ft)	91	106	76	106	137	167
OUTDOOR COIL ROWS...FINS/in. FACE AREA (sq. ft)	 2...20 9.1	 2...20 10.2	 2...20 10.2	 2...20 13.0	 2...20 15.5	 2...20 13.5
OUTDOOR FAN NOMINAL AIRFLOW (CFM) DIAMETER (in.) DIAMETER (mm) MOTOR HP (RPM)	 2000 20 508 1/8 (825)	 2000 20 508 1/8 (825)	 2800 20 508 1/4 (1100)	 3100 20 508 1/4 (1100)	 3100 20 508 1/4 (1100)	 3300 20 508 1/3 (1100)
REQUIRED MINIMUM DISSIPATION AIRFLOW (CFM)	160	186	133	186	239	293
INDOOR METERING DEVICE	Piston			TXV		
ORIFICE ID (in.) (mm)	0.055 1.397	0.057 1.448	0.067 1.702	N/A	N/A	N/A
INDOOR COIL ROWS...FINS/in. FACE AREA (sq. ft)	 3...12 4.3	 3…15 4.3	 3...15 4.9	 3...15 4.9	 3...15 4.9	 3...15 6.1
INDOOR BLOWER NOMINAL COOLING AIRFLOW (CFM) NOMINAL SIZE D x W (in.) (mm) MOTOR (HP)	 800 11 x 8 279 x 203 1/3	 1000 12 x 9 305 x 229 1/2	 1200 12 x 9 305 x 229 1/2	 1400 12 x 9 305 x 229 1/2	 1600 12 x 9 305 x 229 3/4	 1700 12 x 11 305 x 279 1
HIGH-PRESSURE SWITCH (psig) CUTOUT RESET (AUTO)	 650 +/- 15 420 +/- 25					
LOW-PRESSURE SWITCH (psig) CUTOUT RESET (AUTO)	 20 +/- 5 45 +/- 10					
RETURN-AIR FILTERS* THROWAWAY (in.) (mm)	 20x20x1 508x508x25	 20x24x1 508x610x25	 24x30x1 610x762x25	 24x36x1 610x914x25		

*. Required filter sizes shown are based on the AHRI (Air Conditioning, Heating & Refrigeration Institute) rated airflow at a velocity of 300 ft/min (91 m) for throwaway type or 450 ft/min (137 m) for high capacity type. Recommended filters are 1-in. (25 mm) thick.

Accessories

AREA	DESCRIPTION	PART NO.	USED WITH
AC Accessories	240V Crankcase Heater (Factory-Installed on 208/230 VAC-3 phase units)	CPCRKHTR008A00	24-42
		CPCRKHTR004A00	48-60
	Low Ambient Control (Pressure Switch)	KSALA0301410	All
	Low Pressure Switch	CPLPSCTL001A00	All
	Time Guard II (5 minute compressor delay anti-short cycle protection. Some non-corporate thermostats do not have short cycle protection, for which use of this accessory is recommended.)	CRTIMEGD001A00	All
	PTC Compressor Start Assist Kit	CPHSTART002A00	All
Electric Heat Kits	**ELECTRIC HEATERS (208/230 VAC -SINGLE PHASE 60 Hz)**		
	NOMINAL CAPACITY (kW)	**CIRCUIT BREAKER**	**PART NO.**	**USED WITH**
	5.0	No	CPHEATER125A0*	All
	5.0	Yes	CPHEATER126A0*	All
	7.5	No	CPHEATER127A0*	All
	7.5	Yes	CPHEATER128A0*	All
	10.0	No	CPHEATER129A0*	24-48
	10.0	Yes	CPHEATER130A0*	All
	15.0	Yes	CPHEATER131A0*	36-60
	20.0	Yes	CPHEATER132A0*	48-60

* May be any character
Note: Thermostat used must energize fan "G" on a call for heat "W".

Multiplication Factors

HEATER kW RATING	VOLTAGE DISTRIBUTION	MULTIPLICATION FACTOR
240	200	.69
	208	.75
	230	.92
	240	1.00

Example: 15.0 kW (at 240v) heater on 208v
= 15.0 (.75 mult factor)
= 11.25 capacity at 208v

Base Unit Dimensions—024-036

COOLING CAPACITY	UNIT WT.		UNIT HEIGHT	CENTER OF GRAVITY IN [MM]		
	LBS.	KG.	A	X	Y	Z
24	253	115	30-1/8 [765]	14 [356]	19 [483]	14 [356]
30	283	128	34-1/8 [867]	14 [356]	19 [483]	16 [406]
36	285	130	34-1/8 [867]	14 [356]	19 [483]	16 [406]

REQUIRED CLEARANCES TO COMBUSTIBLE MATL.

	INCHES [MM]
TOP OF UNIT	0
BOTTOM OF UNIT	0
SIDE OF UNIT WITH DUCT OPENINGS	0
SIDE OF UNIT OPPOSITE DUCT OPENINGS	0

NEC. REQUIRED CLEARANCES.

	INCHES [MM]
BETWEEN UNITS, POWER ENTRY SIDE	42.0 [1067]
UNIT AND GROUNDED SURFACES, POWER ENTRY SIDE	36.0 [914]
UNIT AND BLOCK OR CONCRETE WALLS AND OTHER GROUNDED SURFACES, POWER ENTRY SIDE	42.0 [1067]

REQUIRED CLEARANCE FOR SERVICING

	INCHES [MM]
TOP OF UNIT	36.0 [914]
SIDE OF UNIT OPPOSITE DUCT OPENINGS	30.0 [762]
SIDE OF UNIT WITH DUCT OPENINGS	30.0 [762]
SIDE OF UNIT WITH POWER ENTRY (EXCEPT FOR NEC REQUIREMENTS)	30.0 [762]

NOTE: CLEARANCES MUST BE MAINTAINED TO PREVENT RECIRCULATION OF AIR FROM OUTDOOR FAN DISCHARGE. A REMOVABLE FENCE OR BARRICADE REQUIRES NO CLEARANCE.

DIMENSIONS IN [] ARE IN MM

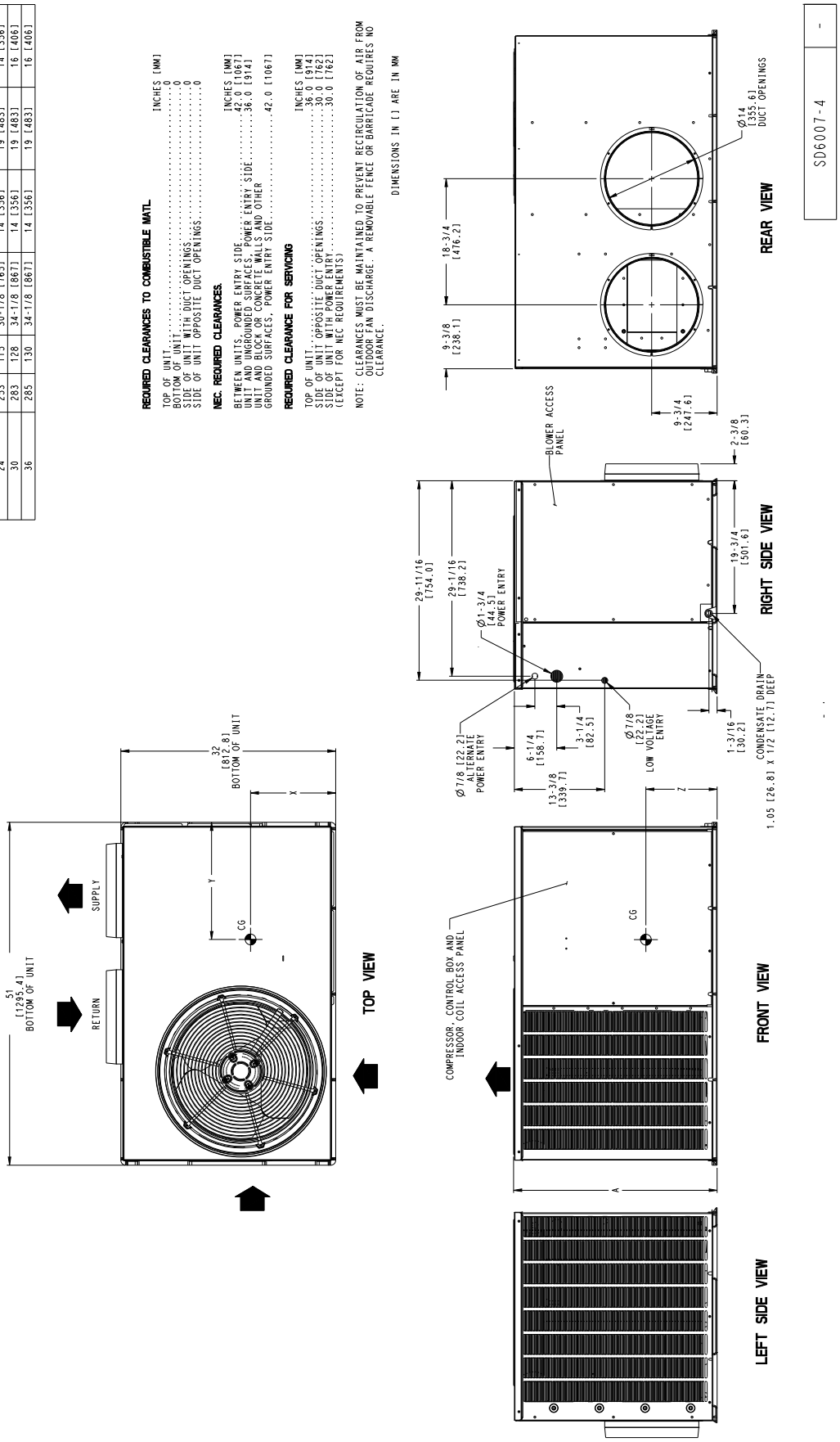

A240410

Base Unit Dimensions — 042-060

COOLING CAPACITY	UNIT WT.		UNIT HEIGHT	CENTER OF GRAVITY IN [MM]		
	LBS.	KG.	A	X	Y	Z
42	339	154	42-1/8 [1070]	14 [356]	19 [483]	19-3/4 [503]
48	358	163	42-1/8 [1070]	14 [356]	19 [483]	19-3/4 [503]
60	425	193	42-1/8 [1070]	14 [356]	19 [483]	19-3/4 [503]

REQUIRED CLEARANCES TO COMBUSTIBLE MATL.

	INCHES [MM]
TOP OF UNIT	0
BOTTOM OF UNIT	0
SIDE OF UNIT WITH DUCT OPENINGS	0
SIDE OF UNIT OPPOSITE DUCT OPENINGS	0

NEC. REQUIRED CLEARANCES.

	INCHES [MM]
BETWEEN UNITS, POWER ENTRY SIDE	42.0 [1067]
UNIT AND UNGROUNDED SURFACES, POWER ENTRY SIDE	42.0 [1067]
UNIT AND BLOCK OR CONCRETE WALLS AND OTHER GROUNDED SURFACES, POWER ENTRY SIDE (EXCEPT FOR NEC REQUIREMENTS)	36.0 [914]
	42.0 [1067]

REQUIRED CLEARANCE FOR SERVICING

	INCHES [MM]
TOP OF UNIT	36.0 [914]
SIDE OF UNIT OPPOSITE DUCT OPENINGS	30.0 [762]
SIDE OF UNIT WITH POWER ENTRY	30.0 [762]

NOTE: CLEARANCES MUST BE MAINTAINED TO PREVENT RECIRCULATION OF AIR FROM OUTDOOR FAN DISCHARGE. A REMOVABLE FENCE OR BARRICADE REQUIRES NO CLEARANCE.

DIMENSIONS IN [] ARE IN MM

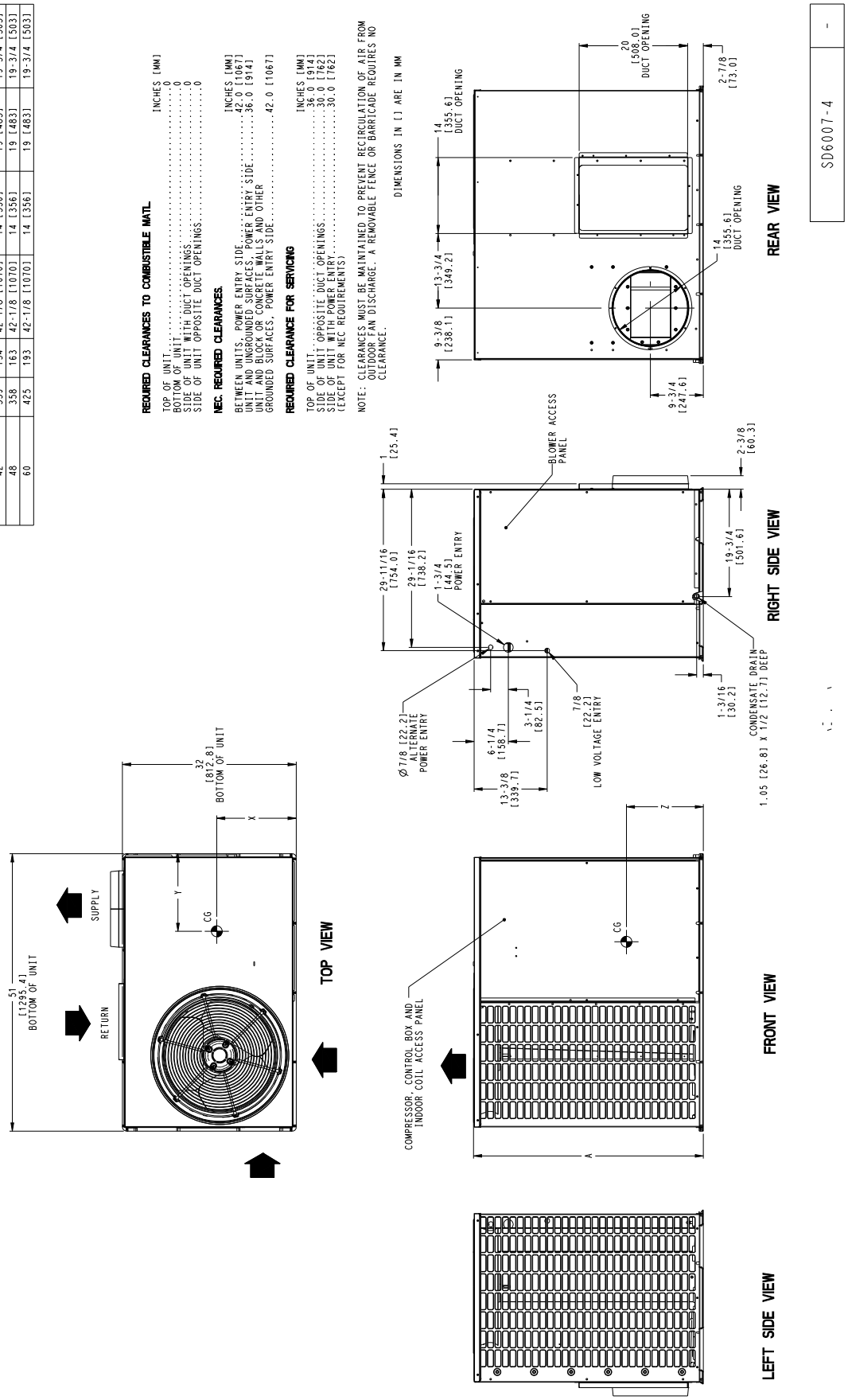

A240411

Selection Procedure

DETERMINE COOLING AND HEATING REQUIREMENTS AT DESIGN CONDITIONS

Given:

Required Cooling Capacity (TC) 28,000
Sensible Heat Capacity (SHC) ..... 20,500 Btuh
Required Heating Capacity ..... 28,550 Btuh
Outdoor Entering-Air Temperature ..... 95°F (35°C)
Outdoor-Air Winter Design Temperature ..... 20°F (-6.7°C)
Indoor-Air Winter Design Temperature ..... 70°F (21.1°C)
Indoor Entering-Air Temperature 80°F (26.7°C) edb, 67°F ewb (19.4°C)
Indoor-Air Quantity ..... 1000 CFM
External Static Pressure ..... 0.20 IN. W.C.
Electrical Characteristics (V-Ph-Hz) 230-1-60

edb — entering dry bulb
ewb — entering wet bulb

SELECT UNIT BASED ON REQUIRED COOLING CAPACITY

Enter Cooling Capacities table at condenser entering temperature of 95°F (35°C), indoor air entering at 1000 CFM and 67°F (19.4°C) ewb (entering wet bulb). The 030 unit will provide a total cooling capacity of 28,600 Btuh and a sensible heat capacity of 21,600 Btuh.

For indoor-air temperature other than 80°F edb (entering dry bulb), calculate sensible heat capacity correction, as required, using the formula found in Note 3 following the cooling capacities tables.

NOTE: Unit ratings are net capacities.

SELECT ELECTRIC HEAT

Enter the 030 Heating Capacities table at 1000 CFM. At 70°F (21.1°C) return indoor air and 20°F (-6.7°C) air entering outdoor coil, the integrated heating capacity is 15,700 Btuh. (Select integrated heating capacity value since deductions for outdoor-coil frost and defrosting have already been made. No correction is required.)

The required heating capacity is 28,550 Btuh. Therefore, 12,850 Btuh (28,550 - 15,700) additional electric heat is required.

Determine additional electric heat capacity in kW.

$$\frac{12{,}850 \text{ Btuh}}{3414 \text{ Btuh/kW}} = 3.76 \text{ kW of heat required}$$

Enter the Accessory Electric Heater Usage table on page 5 for 208/240v. single-phase, 030 unit. The 5-kW heater at 240v most closely satisfies the heating required. To calculate kW at 230v, multiply the heater kW by multiplication factor 0.92 found in the Multiplication Factors table on page 5.

5 kW x 0.92 = 4.6 kW
4.6 x 3414 = 15,704 Btuh

To calculate kW at 208 v, see Multiplication Factors table on page 5.

Total unit heating capacity is 31,404 Btuh (15,700 +15,704).

DETERMINE FAN SPEED AND POWER REQUIREMENTS AT DESIGN CONDITIONS

Before entering the air delivery tables, calculate the total static pressure required. From the given, the Accessory Electric Heat Pressure Drop table, and the Filter Pressure Drop table, find:

External static pressure	0.20 IN. W.C.
Filter	0.09 IN. W.C.
Electric heat	0.04 IN. W.C.
Total static pressure	0.33 IN. W.C.

Enter the table for Dry Coil Air Delivery — Horizontal Discharge at 1000 CFM and 230v high speed. The blower will deliver 1085 CFM @ 0.40 IN W.C. static pressure. This will adequately handle job requirements.

Manufacturer reserves the right to change, at any time, specifications and designs without notice and without obligations.

BALANCE POINT WORKSHEET

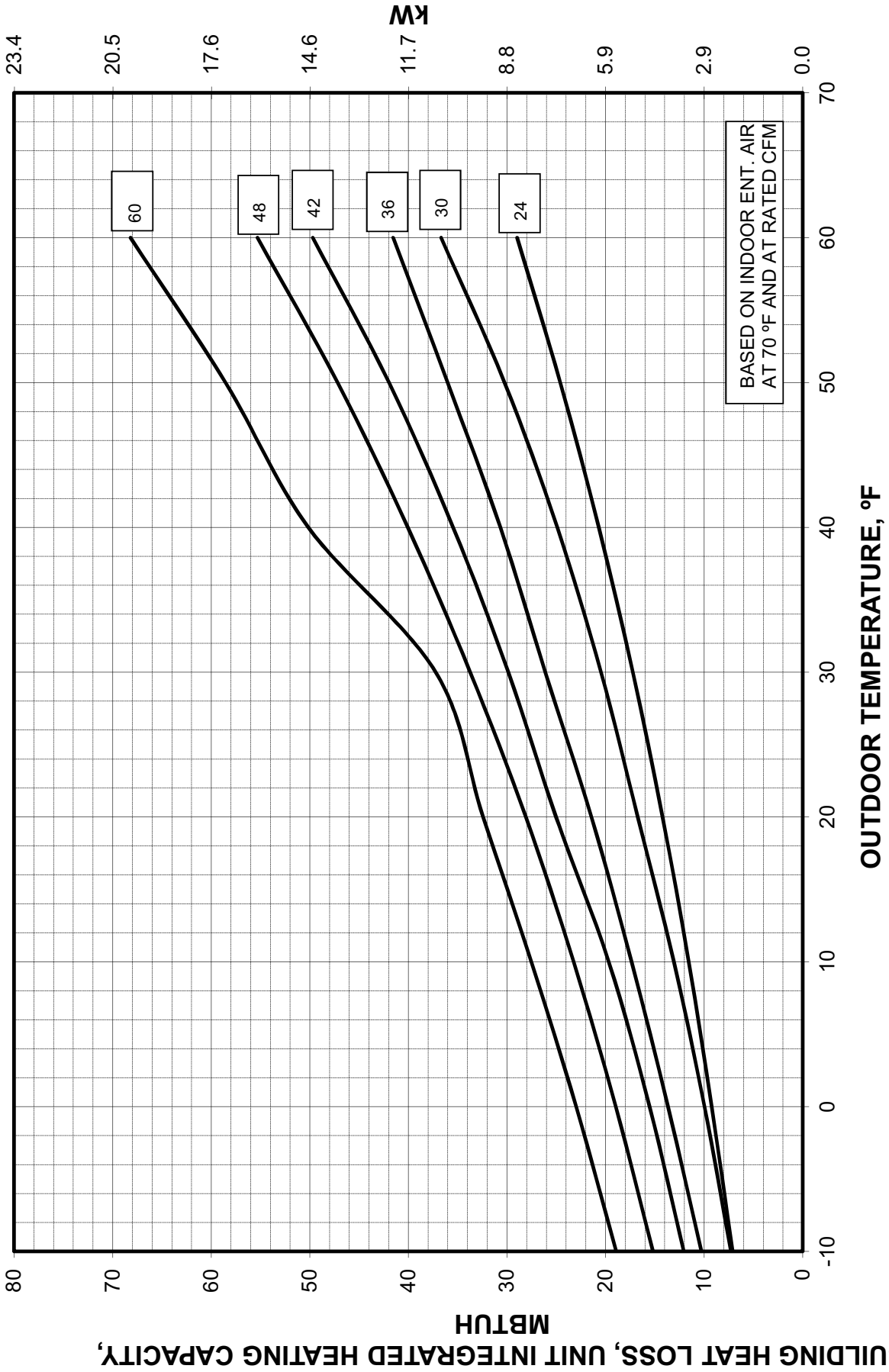

A150088

Performance Data

COOLING CAPACITY
024

EVAPORATOR AIR		CONDENSER ENTERING AIR TEMPERATURES °F (°C)																	
		75 (23.9)			85 (29.4)			95 (35)			105 (40.6)			115 (46.1)			125 (51.7)		
CFM / BF	EWB	Capacity MBtuh Total	Capacity MBtuh Sens	Total Sys KW	Capacity MBtuh Total	Capacity MBtuh Sens	Total Sys KW	Capacity MBtuh Total	Capacity MBtuh Sens	Total Sys KW	Capacity MBtuh Total	Capacity MBtuh Sens	Total Sys KW	Capacity MBtuh Total	Capacity MBtuh Sens	Total Sys KW	Capacity MBtuh Total	Capacity MBtuh Sens	Total Sys KW
700 / .09	57	24.2	24.2	1.6	22.7	22.7	1.7	21.3	21.3	1.9	19.1	19.1	2.2	17.0	17.0	2.4	16.3	16.3	2.7
	62	25.2	22.6	1.6	23.4	22.0	1.7	21.9	20.3	1.9	19.7	18.8	2.2	17.4	17.0	2.4	16.8	15.6	2.7
	63*	25.7	18.3	1.6	23.8	17.6	1.7	22.1	16.6	1.9	19.6	15.9	2.2	17.2	14.9	2.4	16.2	14.5	2.7
	67	27.6	19.0	1.6	25.6	18.3	1.7	23.7	17.3	1.9	21.1	16.6	2.2	18.5	15.6	2.4	17.4	15.1	2.7
	72	30.1	15.2	1.6	27.9	14.5	1.7	25.9	13.6	1.9	23.0	13.0	2.2	20.2	12.0	2.4	19.0	11.5	2.7
800 / .10	57	25.4	24.5	1.6	23.8	23.0	1.7	22.3	21.1	1.9	20.1	19.5	2.2	17.8	17.6	2.4	17.1	16.2	2.7
	62	25.7	23.5	1.6	23.8	22.9	1.7	22.3	21.1	1.9	20.1	19.5	2.2	17.8	17.6	2.4	17.1	16.2	2.7
	63*	26.0	19.0	1.6	24.1	18.3	1.7	22.3	17.3	1.9	19.9	16.6	2.2	17.4	15.5	2.4	16.4	15.1	2.7
	67	27.9	19.8	1.6	25.9	19.0	1.8	24.0	18.0	2.0	21.4	17.3	2.2	18.7	16.2	2.4	17.6	15.7	2.7
	72	30.4	15.8	1.6	28.3	15.0	1.8	26.2	14.1	2.0	23.3	13.5	2.2	20.4	12.5	2.5	19.2	12.0	2.7
900 / .12	57	26.3	26.2	1.6	24.1	24.1	1.8	22.8	22.6	2.0	20.4	20.4	2.2	18.4	18.4	2.5	17.4	17.3	2.7
	62	26.6	25.4	1.6	24.1	24.1	1.8	22.9	22.6	2.0	20.4	20.4	2.2	18.4	18.4	2.5	17.4	17.3	2.7
	63*	26.9	20.3	1.6	24.4	19.5	1.8	22.9	18.4	2.0	20.2	17.7	2.2	18.0	16.8	2.5	16.7	16.1	2.7
	67	28.9	21.1	1.6	26.2	20.4	1.8	24.6	19.2	2.0	21.7	18.4	2.2	19.0	17.5	2.5	18.0	16.8	2.7
	72	31.5	16.9	1.6	28.6	16.1	1.8	26.9	15.1	2.0	23.7	14.4	2.2	21.1	13.4	2.5	19.6	12.8	2.7

See page 16 for notes.

HEATING CAPACITY
024

INDOOR AIR		OUTDOOR COIL ENTERING AIR TEMPERATURES °F (°C)																							
		-10 (-23.3)			0 (-17.8)			10 (-12.2)			20 (-6.7)			30 (-1.1)			40 (4.4)			50 (10)			60 (15.6)		
EDB	CFM	Capacity MBtuh Total	Capacity MBtuh Integ	Total Sys KW	Capacity MBtuh Total	Capacity MBtuh Integ	Total Sys KW	Capacity MBtuh Total	Capacity MBtuh Integ	Total Sys KW	Capacity MBtuh Total	Capacity MBtuh Integ	Total Sys KW	Capacity MBtuh Total	Capacity MBtuh Integ	Total Sys KW	Capacity MBtuh Total	Capacity MBtuh Integ	Total Sys KW	Capacity MBtuh Total	Capacity MBtuh Integ	Total Sys KW	Capacity MBtuh Total	Capacity MBtuh Integ	Total Sys KW
65°F (18.3°C)	700	7.6	7.0	1.48	9.3	8.5	1.51	11.9	11.0	1.55	14.6	13.2	1.59	17.8	15.6	1.61	21.7	21.7	1.69	26.1	26.1	1.91	30.2	30.2	1.97
	800	7.6	7.0	1.51	9.4	8.6	1.54	12.1	11.1	1.57	14.8	13.4	1.61	18.0	15.8	1.63	21.9	21.9	1.70	26.4	26.4	1.91	30.6	30.6	1.97
	900	7.8	7.1	1.54	9.5	8.7	1.56	12.2	11.2	1.60	14.9	13.5	1.63	18.1	15.9	1.65	22.0	22.0	1.72	26.6	26.6	1.92	30.7	30.7	1.97
70°F (21.1°C)	700	7.4	6.8	1.55	9.0	8.3	1.58	11.6	10.7	1.62	14.2	12.9	1.66	17.3	15.2	1.68	21.1	21.1	1.77	25.4	25.4	1.99	29.5	29.5	2.05
	800	7.4	6.7	1.57	9.1	8.2	1.60	11.8	10.6	1.64	14.4	13.0	1.68	17.5	15.8	1.70	21.4	21.4	1.77	25.7	25.7	1.99	29.8	29.8	2.05
	900	7.5	6.9	1.60	9.2	8.5	1.62	11.9	10.9	1.66	14.5	13.1	1.70	17.6	15.4	1.72	21.5	21.5	1.79	25.9	25.9	1.99	29.9	29.9	2.05
75°F (23.9°C)	700	7.2	6.6	1.61	8.8	8.1	1.65	11.4	10.5	1.69	14.0	12.6	1.73	17.2	15.0	1.75	20.9	20.9	1.84	25.2	25.2	2.08	29.2	29.2	2.14
	800	7.3	6.7	1.63	8.9	8.2	1.66	11.5	10.6	1.70	14.1	12.8	1.74	17.3	15.2	1.76	21.1	21.1	1.85	25.4	25.4	2.07	29.5	29.5	2.13
	900	7.4	6.8	1.65	9.0	8.3	1.68	11.6	10.7	1.72	14.2	12.9	1.76	17.5	15.3	1.78	21.3	21.3	1.86	25.7	25.7	2.07	29.6	29.6	2.13

See page 16 for notes.

Manufacturer reserves the right to change, at any time, specifications and designs without notice and without obligations.

Performance Data (cont)

COOLING CAPACITY

030

EVAPORATOR AIR		CONDENSER ENTERING AIR TEMPERATURES °F (°C)																	
		75 (23.9)			85 (29.4)			95 (35)			105 (40.6)			115 (46.1)			125 (51.7)		
CFM / BF	EWB	Capacity MBtuh		Total Sys KW	Capacity MBtuh		Total Sys KW	Capacity MBtuh		Total Sys KW	Capacity MBtuh		Total Sys KW	Capacity MBtuh		Total Sys KW	Capacity MBtuh		Total Sys KW
		Total	Sens		Total	Sens		Total	Sens		Total	Sens		Total	Sens		Total	Sens	
875 / .09	57	28.0	28.0	1.9	27.1	27.1	2.1	25.3	25.3	2.3	21.0	21.0	2.6	18.7	18.7	3.0	16.7	16.7	3.3
	62	29.1	26.2	1.9	27.8	25.5	2.1	26.1	24.1	2.3	21.6	21.1	2.6	19.2	18.8	3.0	17.2	16.4	3.3
	63*	29.7	21.1	1.9	28.4	20.4	2.1	26.3	19.7	2.3	21.6	17.9	2.6	18.9	16.6	3.0	16.6	15.3	3.3
	67	32.0	22.0	1.9	30.5	21.3	2.1	28.3	20.5	2.3	23.2	18.7	2.6	20.4	17.3	3.0	17.9	15.9	3.3
	72	34.8	17.6	1.9	33.3	16.8	2.1	30.9	16.2	2.4	25.3	14.6	2.6	22.2	13.3	3.0	19.5	12.1	3.3
1000 / .10	57	29.4	28.3	1.9	28.4	26.7	2.1	26.6	25.1	2.4	22.0	21.9	2.6	19.6	19.6	3.0	17.6	17.0	3.3
	62	29.7	27.2	1.9	28.4	26.5	2.1	26.6	25.1	2.4	22.0	21.9	2.6	19.6	19.6	3.0	17.6	17.0	3.3
	63*	30.1	21.9	1.9	28.7	21.2	2.1	26.6	20.5	2.4	21.8	18.6	2.6	19.2	17.2	3.0	16.8	15.9	3.3
	67	32.3	22.8	2.0	30.9	22.1	2.1	28.6	21.3	2.4	23.5	19.4	2.6	20.6	18.0	3.0	18.1	16.5	3.3
	72	35.2	18.3	2.0	33.7	17.4	2.2	31.3	16.8	2.4	25.6	15.1	2.7	22.4	13.8	3.1	19.7	12.6	3.3
1125 / .12	57	30.4	30.3	2.0	29.4	28.6	2.2	27.5	26.8	2.4	22.8	22.8	2.7	20.2	20.2	3.1	18.2	18.2	3.4
	62	30.8	29.3	2.0	29.4	28.3	2.2	27.5	26.8	2.4	22.8	22.8	2.7	20.2	20.2	3.1	18.2	18.2	3.4
	63*	31.1	23.4	2.0	29.7	22.7	2.2	27.6	21.9	2.4	22.6	19.9	2.7	19.8	18.4	3.1	17.4	17.0	3.4
	67	33.4	24.4	2.0	32.0	23.6	2.2	29.6	22.8	2.4	24.3	20.8	2.7	21.3	19.2	3.1	18.7	17.7	3.4
	72	36.5	19.5	2.0	34.8	18.6	2.2	32.4	17.9	2.4	26.5	16.2	2.7	23.2	14.8	3.1	20.4	13.4	3.4

See page 16 for notes.

HEATING CAPACITY

030

INDOOR AIR		OUTDOOR COIL ENTERING AIR TEMPERATURES °F (°C)																							
		-10 (-23.3)			0 (-17.8)			10 (-12.2)			20 (-6.7)			30 (-1.1)			40 (4.4)			50 (10)			60 (15.6)		
EDB	CFM	Capacity MBtuh		Total Sys KW	Capacity MBtuh		Total Sys KW	Capacity MBtuh		Total Sys KW	Capacity MBtuh		Total Sys KW	Capacity MBtuh		Total Sys KW	Capacity MBtuh		Total Sys KW	Capacity MBtuh		Total Sys KW	Capacity MBtuh		Total Sys KW
		Total	Integ		Total	Integ		Total	Integ		Total	Integ		Total	Integ		Total	Integ		Total	Integ		Total	Integ	
65°F (18.3°C)	875	8.9	8.2	1.6	11.0	10.1	1.8	14.1	13.0	1.8	17.3	15.7	1.9	21.1	18.5	1.8	25.7	25.7	1.9	30.9	30.9	2.1	35.8	35.8	2.3
	1000	9.0	8.3	1.7	11.1	10.2	1.8	14.3	13.1	1.9	17.5	15.8	1.9	21.3	18.7	1.9	26.0	26.0	1.9	31.2	31.2	2.1	36.2	36.2	2.3
	1125	9.2	8.4	1.7	11.2	10.3	1.8	14.4	13.3	1.9	17.6	16.0	1.9	21.4	18.8	1.9	26.1	26.1	2.0	31.5	31.5	2.2	36.3	36.3	2.3
70°F (21.1°C)	875	8.7	8.0	1.7	10.7	9.8	1.8	13.8	12.7	1.9	16.9	15.3	2.0	20.5	18.0	1.9	25.0	25.0	2.0	30.1	30.1	2.2	34.9	34.9	2.4
	1000	8.8	7.8	1.8	10.8	9.7	1.9	13.9	12.7	1.9	17.0	15.7	2.0	20.7	19.1	2.0	25.3	25.3	2.0	30.4	30.4	2.2	35.2	35.2	2.4
	1125	8.9	8.2	1.8	10.9	10.1	1.9	14.1	12.9	2.0	17.2	15.5	2.0	20.9	18.3	2.0	25.4	25.4	2.1	30.7	30.7	2.3	35.4	35.4	2.4
75°F (23.9°C)	875	8.5	7.8	1.8	10.5	9.6	1.9	13.5	12.4	2.0	16.5	15.0	2.0	20.3	17.8	2.0	24.8	24.8	2.1	29.8	29.8	2.3	34.5	34.5	2.5
	1000	8.6	7.9	1.8	10.6	9.7	1.9	13.6	12.5	2.0	16.7	15.1	2.1	20.5	18.0	2.0	25.0	25.0	2.1	30.1	30.1	2.3	34.9	34.9	2.5
	1125	8.8	8.1	1.9	10.7	9.9	2.0	13.8	12.7	2.0	16.8	15.2	2.1	20.7	18.1	2.1	25.2	25.2	2.1	30.4	30.4	2.3	35.0	35.0	2.5

See page 16 for notes.

Manufacturer reserves the right to change, at any time, specifications and designs without notice and without obligations.

Performance Data (cont)

COOLING CAPACITY

036

EVAPORATOR AIR		CONDENSER ENTERING AIR TEMPERATURES °F (°C)																	
		75 (23.9)			85 (29.4)			95 (35)			105 (40.6)			115 (46.1)			125 (51.7)		
CFM / BF	EWB	Capacity MBtuh		Total Sys KW	Capacity MBtuh		Total Sys KW	Capacity MBtuh		Total Sys KW	Capacity MBtuh		Total Sys KW	Capacity MBtuh		Total Sys KW	Capacity MBtuh		Total Sys KW
		Total	Sens		Total	Sens		Total	Sens†		Total	Sens		Total	Sens		Total	Sens	
1050 / .09	57	35.1	35.1	2.3	33.1	33.1	2.5	31.2	31.2	2.8	28.1	28.1	3.1	25.8	25.8	3.4	22.0	22.0	3.8
	62	36.4	33.2	2.3	34.0	32.4	2.5	32.1	30.8	2.8	28.9	27.6	3.1	26.5	24.9	3.4	22.6	21.8	3.8
	63*	37.2	26.8	2.3	34.7	25.9	2.5	32.4	25.2	2.8	28.8	23.5	3.1	26.2	21.9	3.4	21.8	20.3	3.8
	67	40.0	27.9	2.3	37.3	27.0	2.5	34.8	26.2	2.8	31.0	24.5	3.1	28.2	22.8	3.4	23.5	21.2	3.8
	72	43.6	22.3	2.3	40.7	21.3	2.6	38.0	20.6	2.9	33.8	19.1	3.1	30.7	17.6	3.4	25.6	16.1	3.8
1200 / .10	57	36.8	36.0	2.3	34.7	33.9	2.6	32.7	32.0	2.9	29.4	28.7	3.1	27.1	25.8	3.5	23.0	22.6	3.8
	62	37.2	34.5	2.3	34.7	33.7	2.6	32.7	32.0	2.9	29.4	28.7	3.1	27.1	25.8	3.5	23.0	22.6	3.8
	63*	37.6	27.8	2.3	35.1	26.9	2.6	32.8	26.1	2.9	29.1	24.4	3.1	26.5	22.7	3.5	22.1	21.1	3.8
	67	40.4	29.0	2.3	37.7	28.0	2.6	35.2	27.2	2.9	31.3	25.4	3.1	28.5	23.7	3.5	23.8	22.0	3.8
	72	44.0	23.2	2.4	41.1	22.2	2.6	38.5	21.4	2.9	34.1	19.8	3.2	31.1	18.2	3.5	25.9	16.7	3.9
1350 / .11	57	37.6	37.6	2.4	35.5	35.5	2.6	33.5	33.5	2.9	30.1	30.1	3.2	27.7	27.6	3.5	23.6	23.6	3.9
	62	38.1	37.3	2.4	35.5	35.5	2.6	33.5	33.5	2.9	30.1	30.1	3.2	27.7	27.6	3.5	23.6	23.6	3.9
	63*	38.5	29.8	2.4	35.9	28.8	2.6	33.5	27.4	2.9	29.8	25.5	3.2	27.1	23.8	3.5	22.6	22.1	3.9
	67	41.4	31.0	2.4	38.6	30.0	2.6	36.0	28.5	2.9	32.1	26.6	3.2	29.2	24.8	3.5	24.3	23.0	3.9
	72	45.1	24.8	2.4	42.1	23.7	2.7	39.4	22.4	3.0	35.0	20.8	3.2	31.8	19.1	3.5	26.5	17.5	3.9

See page 16 for notes.

HEATING CAPACITY 036

INDOOR AIR		OUTDOOR COIL ENTERING AIR TEMPERATURES °F (°C)																							
		-10 (-23.3)			0 (-17.8)			10 (-12.2)			20 (-6.7)			30 (-1.1)			40 (4.4)			50 (10)			60 (15.6)		
EDB	CFM	Capacity MBtuh		Total Sys KW	Capacity MBtuh		Total Sys KW	Capacity MBtuh		Total Sys KW	Capacity MBtuh		Total Sys KW	Capacity MBtuh		Total Sys KW	Capacity MBtuh		Total Sys KW	Capacity MBtuh		Total Sys KW	Capacity MBtuh		Total Sys KW
		Total	Integ		Total	Integ		Total	Integ		Total	Integ		Total	Integ		Total	Integ		Total	Integ		Total	Integ	
65°F (18.3° C)	1050	10.3	9.4	2.0	10.3	9.4	2.0	15.1	13.9	2.1	16.9	15.3	2.2	18.4	16.1	2.2	29.5	29.5	2.3	34.1	34.1	2.5	39.6	39.6	2.6
	1200	10.4	9.5	2.0	10.4	9.5	2.1	15.3	14.1	2.2	17.1	15.5	2.2	18.6	16.3	2.3	29.8	29.8	2.4	34.5	34.5	2.5	40.0	40.0	2.6
	1350	10.5	9.7	2.1	10.5	9.7	2.1	15.5	14.2	2.2	17.2	15.6	2.3	18.7	16.4	2.3	30.0	30.0	2.4	34.8	34.8	2.6	40.2	40.2	2.6
70°F (21.1° C)	1050	10.0	9.2	2.1	10.0	9.2	2.1	14.7	13.6	2.2	16.4	14.9	2.3	17.9	15.7	2.3	28.7	28.7	2.4	33.2	33.2	2.6	38.6	38.6	2.7
	1200	10.1	9.0	2.1	10.1	9.1	2.2	14.9	13.6	2.3	16.6	15.3	2.3	18.1	16.8	2.4	29.0	29.0	2.5	33.6	33.6	2.6	39.0	39.0	2.7
	1350	10.3	9.4	2.2	10.3	9.4	2.2	15.1	13.9	2.3	16.8	15.2	2.4	18.3	16.0	2.4	29.2	29.2	2.5	33.9	33.9	2.7	39.1	39.1	2.7
75°F (23.9° C)	1050	9.8	9.0	2.1	9.8	9.0	2.2	14.4	13.3	2.3	16.1	14.6	2.4	17.7	15.5	2.4	28.4	28.4	2.5	32.9	32.9	2.7	38.2	38.2	2.8
	1200	9.9	9.1	2.2	9.9	9.1	2.3	14.6	13.4	2.4	16.3	14.7	2.4	17.9	15.7	2.5	28.7	28.7	2.6	33.2	33.2	2.7	38.6	38.6	2.8
	1350	10.1	9.3	2.2	10.1	9.3	2.3	14.8	13.6	2.4	16.5	14.9	2.4	18.1	15.8	2.5	28.9	28.9	2.6	33.6	33.6	2.8	38.7	38.7	2.9

See page 16 for notes.

Manufacturer reserves the right to change, at any time, specifications and designs without notice and without obligations.

Performance Data (cont)

COOLING CAPACITY

042

EVAPORATOR AIR		CONDENSER ENTERING AIR TEMPERATURES °F (°C)																	
		75 (23.9)			85 (29.4)			95 (35)			105 (40.6)			115 (46.1)			125 (51.7)		
CFM / BF	EWB	Capacity MBtuh		Total Sys KW	Capacity MBtuh		Total Sys KW	Capacity MBtuh		Total Sys KW	Capacity MBtuh		Total Sys KW	Capacity MBtuh		Total Sys KW	Capacity MBtuh		Total Sys KW
		Total	Sens		Total	Sens		Total	Sens		Total	Sens		Total	Sens		Total	Sens	
1225 / .10	57	40.4	40.4	2.7	38.6	38.6	3.0	35.9	35.9	3.3	34.3	34.3	3.8	31.9	31.9	4.1	29.1	29.1	4.6
	62	42.0	38.8	2.7	39.7	37.9	3.0	36.9	34.4	3.3	35.3	32.6	3.8	32.8	30.0	4.1	29.9	26.5	4.6
	63*	42.8	31.3	2.7	40.5	30.3	3.0	37.3	28.1	3.3	35.2	27.7	3.8	32.4	26.4	4.1	28.9	24.7	4.6
	67	46.1	32.6	2.8	43.5	31.6	3.0	40.0	29.3	3.4	37.8	28.9	3.8	34.8	27.5	4.1	31.1	25.7	4.6
	72	50.3	26.1	2.8	47.4	25.0	3.1	43.8	23.0	3.4	41.2	22.5	3.8	38.0	21.2	4.2	33.9	19.6	4.6
1400 / .11	57	42.4	42.0	2.8	40.5	39.7	3.1	37.6	35.7	3.4	36.0	33.9	3.8	33.5	31.1	4.2	30.5	27.6	4.6
	62	42.8	40.3	2.8	40.5	39.4	3.1	37.7	35.7	3.4	36.0	33.9	3.8	33.5	31.1	4.2	30.5	27.6	4.6
	63*	43.3	32.5	2.8	40.9	31.5	3.1	37.7	29.2	3.4	35.6	28.8	3.8	32.8	27.4	4.2	29.3	25.7	4.6
	67	46.6	33.9	2.8	44.0	32.8	3.1	40.5	30.4	3.4	38.3	30.0	3.8	35.2	28.6	4.2	31.5	26.8	4.6
	72	50.9	27.1	2.8	48.0	25.9	3.1	44.3	23.9	3.5	41.7	23.4	3.9	38.4	22.0	4.2	34.3	20.3	4.7
1575 / .13	57	43.9	43.9	2.8	41.9	41.9	3.1	38.9	38.2	3.5	37.2	36.2	3.9	34.6	33.3	4.3	31.6	29.4	4.7
	62	44.3	43.6	2.8	41.9	41.9	3.1	39.0	38.2	3.5	37.2	36.2	3.9	34.6	33.3	4.3	31.6	29.4	4.7
	63*	44.8	34.8	2.8	42.4	33.7	3.1	39.0	31.2	3.5	36.8	30.8	3.9	33.9	29.3	4.3	30.3	27.4	4.7
	67	48.2	36.2	2.9	45.6	35.1	3.2	41.9	32.5	3.5	39.6	32.0	3.9	36.5	30.5	4.3	32.6	28.6	4.7
	72	52.6	29.0	2.9	49.7	27.7	3.2	45.8	25.6	3.5	43.2	25.0	3.9	39.8	23.5	4.3	35.5	21.7	4.7

See page 16 for notes.

HEATING CAPACITY

042

INDOOR AIR		OUTDOOR COIL ENTERING AIR TEMPERATURES °F (°C)																							
		-10 (-23.3)			0 (-17.8)			10 (-12.2)			20 (-6.7)			30 (-1.1)			40 (4.4)			50 (10)			60 (15.6)		
EDB	CFM	Capacity MBtuh		Total Sys KW	Capacity MBtuh		Total Sys KW	Capacity MBtuh		Total Sys KW	Capacity MBtuh		Total Sys KW	Capacity MBtuh		Total Sys KW	Capacity MBtuh		Total Sys KW	Capacity MBtuh		Total Sys KW	Capacity MBtuh		Total Sys KW
		Total	Integ		Total	Integ		Total	Integ		Total	Integ		Total	Integ		Total	Integ		Total	Integ		Total	Integ	
65°F (18.3°C)	1225	13.5	12.4	2.6	16.6	15.3	2.7	21.4	19.7	2.8	26.4	23.8	2.9	31.3	27.4	3.0	37.5	37.5	3.0	43.6	43.6	3.3	49.9	49.9	3.4
	1400	13.6	12.5	2.6	16.8	15.5	2.7	21.6	19.9	2.8	26.6	24.1	2.9	31.6	27.7	3.0	37.9	37.9	3.0	44.1	44.1	3.3	50.5	50.5	3.4
	1575	13.8	12.7	2.7	17.0	15.7	2.8	21.8	20.1	2.8	26.8	24.3	3.0	31.8	27.9	3.0	38.0	38.0	3.0	44.5	44.5	3.3	50.7	50.7	3.4
70°F (21.1°C)	1225	13.1	12.1	2.7	16.2	14.9	2.8	20.8	19.2	2.9	25.7	23.2	3.0	30.5	26.7	3.1	36.5	36.5	3.1	42.5	42.5	3.4	48.6	48.6	3.5
	1400	13.3	11.8	2.7	16.4	14.7	2.8	21.1	19.2	2.9	25.9	23.9	3.1	30.8	28.7	3.1	36.9	36.9	3.1	42.9	42.9	3.4	49.1	49.1	3.5
	1575	13.5	12.4	2.8	16.6	15.2	2.9	21.3	19.6	3.0	26.1	23.6	3.1	31.0	27.2	3.1	37.0	37.0	3.2	43.3	43.3	3.4	49.3	49.3	3.5
75°F (23.9°C)	1225	12.8	11.8	2.8	15.9	14.6	2.9	20.4	18.8	3.0	25.1	22.8	3.2	30.2	26.4	3.2	36.1	36.1	3.3	42.0	42.0	3.6	48.1	48.1	3.7
	1400	13.0	12.0	2.8	16.1	14.8	3.0	20.6	19.0	3.0	25.4	23.0	3.2	30.5	26.7	3.2	36.5	36.5	3.3	42.5	42.5	3.6	48.6	48.6	3.7
	1575	13.2	12.1	2.9	16.2	14.9	3.0	20.8	19.2	3.1	25.6	23.2	3.2	30.7	26.9	3.3	36.7	36.7	3.3	42.9	42.9	3.6	48.8	48.8	3.7

See page 16 for notes.

Manufacturer reserves the right to change, at any time, specifications and designs without notice and without obligations.

Performance Data (cont)

COOLING CAPACITY

048

EVAPORATOR AIR		CONDENSER ENTERING AIR TEMPERATURES °F (°C)																	
		75 (23.9)			85 (29.4)			95 (35)			105 (40.6)			115 (46.1)			125 (51.7)		
CFM / BF	EWB	Capacity MBtuh		Total Sys KW	Capacity MBtuh		Total Sys KW	Capacity MBtuh		Total Sys KW	Capacity MBtuh		Total Sys KW	Capacity MBtuh		Total Sys KW	Capacity MBtuh		Total Sys KW
		Total	Sens		Total	Sens		Total	Sens		Total	Sens		Total	Sens		Total	Sens	
1400 / .12	57	43.8	43.8	3.2	42.7	42.7	3.5	40.3	40.3	3.9	35.9	35.9	4.4	33.0	33.0	4.9	30.7	30.7	5.5
	62	45.5	41.8	3.2	43.9	41.4	3.5	41.5	38.6	3.9	36.9	34.1	4.4	33.9	31.5	4.9	31.6	30.1	5.5
	63*	46.4	33.7	3.2	44.8	33.1	3.5	41.9	31.5	3.9	36.8	29.0	4.4	33.5	27.7	4.9	30.5	28.1	5.5
	67	49.9	35.1	3.2	48.1	34.5	3.6	45.0	32.8	4.0	39.6	30.2	4.4	36.0	28.9	4.9	32.8	29.2	5.5
	72	54.4	28.1	3.3	52.5	27.2	3.6	49.2	25.8	4.0	43.2	23.6	4.5	39.2	22.2	5.0	35.8	22.2	5.6
1600 / .13	57	46.0	45.3	3.3	44.8	43.3	3.6	42.3	40.1	4.0	37.6	35.5	4.5	34.6	32.7	5.0	32.2	31.3	5.6
	62	46.5	43.4	3.3	44.8	43.0	3.6	42.3	40.1	4.0	37.6	35.5	4.5	34.6	32.7	5.0	32.2	31.3	5.6
	63*	47.0	35.0	3.3	45.3	34.4	3.6	42.4	32.7	4.0	37.2	30.1	4.5	33.9	28.8	5.0	30.9	29.1	5.6
	67	50.5	36.5	3.3	48.7	35.8	3.6	45.5	34.1	4.0	40.0	31.4	4.5	36.4	30.0	5.0	33.2	30.4	5.6
	72	55.1	29.2	3.3	53.1	28.3	3.7	49.7	26.8	4.1	43.6	24.5	4.5	39.7	23.1	5.0	36.2	23.1	5.6
1800 / .15	57	47.6	47.6	3.3	46.4	46.3	3.7	43.7	42.8	4.1	39.0	37.9	4.5	35.8	35.0	5.1	33.3	33.3	5.6
	62	48.1	46.9	3.3	46.4	45.9	3.7	43.8	42.8	4.1	39.0	37.9	4.5	35.8	35.0	5.1	33.3	33.3	5.6
	63*	48.6	37.4	3.3	46.9	36.7	3.7	43.8	35.0	4.1	38.5	32.2	4.5	35.0	30.8	5.1	32.0	31.1	5.6
	67	52.3	39.0	3.4	50.4	38.3	3.7	47.1	36.5	4.1	41.4	33.5	4.5	37.7	32.1	5.1	34.4	32.4	5.6
	72	57.0	31.2	3.4	54.9	30.2	3.7	51.5	28.7	4.1	45.2	26.2	4.6	41.1	24.7	5.1	37.5	24.7	5.7

See page 16 for notes.

HEATING CAPACITY APPENDIX M TEST PROCEDURE

048

INDOOR AIR		OUTDOOR COIL ENTERING AIR TEMPERATURES °F (°C)																							
		-10 (-23.3)			0 (-17.8)			10 (-12.2)			20 (-6.7)			30 (-1.1)			40 (4.4)			50 (10)			60 (15.6)		
EDB	CFM	Capacity MBtuh		Total Sys KW	Capacity MBtuh		Total Sys KW	Capacity MBtuh		Total Sys KW	Capacity MBtuh		Total Sys KW	Capacity MBtuh		Total Sys KW	Capacity MBtuh		Total Sys KW	Capacity MBtuh		Total Sys KW	Capacity MBtuh		Total Sys KW
		Total	Integ		Total	Integ		Total	Integ		Total	Integ		Total	Integ		Total	Integ		Total	Integ		Total	Integ	
65°F (18.3° C)	1400	16.0	14.7	3.0	18.7	17.2	3.1	21.5	19.8	3.2	32.0	29.0	3.3	36.4	31.8	3.4	41.5	41.5	3.5	47.6	47.6	4.0	54.4	54.4	4.3
	1600	16.2	14.9	3.0	18.9	17.4	3.1	21.7	20.0	3.2	32.4	29.3	3.3	36.7	32.2	3.4	41.9	41.9	3.5	48.1	48.1	4.0	55.0	55.0	4.2
	1800	16.4	15.1	3.1	19.2	17.6	3.2	21.9	20.2	3.3	32.6	29.5	3.4	37.0	32.4	3.5	42.1	42.1	3.6	48.6	48.6	4.0	55.2	55.2	4.2
70°F (21.1° C)	1400	15.6	14.3	3.1	18.2	16.8	3.2	20.9	19.2	3.3	31.2	28.2	3.5	35.4	31.0	3.6	40.4	40.4	3.7	46.3	46.3	4.2	53.0	53.0	4.4
	1600	15.8	14.0	3.1	18.5	16.6	3.2	21.2	19.2	3.4	31.5	29.0	3.5	35.8	33.3	3.6	40.8	40.8	3.7	46.8	46.8	4.2	53.6	52.7	4.4
	1800	16.0	14.7	3.2	18.7	17.2	3.3	21.4	19.7	3.4	31.7	28.7	3.5	36.0	31.5	3.6	41.0	41.0	3.7	47.3	47.3	4.2	53.8	53.8	4.4
75°F (23.9° C)	1400	15.3	14.0	3.2	17.9	16.5	3.3	20.5	18.9	3.5	30.5	27.6	3.6	35.0	30.7	3.7	40.0	40.0	3.8	45.9	45.9	4.4	52.5	52.5	4.6
	1600	15.4	14.2	3.3	18.1	16.6	3.4	20.7	19.1	3.5	30.9	27.9	3.6	35.4	31.0	3.7	40.4	40.4	3.8	46.3	46.3	4.4	53.0	53.0	4.6
	1800	15.7	14.4	3.3	18.3	16.8	3.4	20.9	19.3	3.5	31.1	28.1	3.6	35.6	31.2	3.7	40.6	40.6	3.8	46.8	46.8	4.3	53.2	53.2	4.6

See page 16 for notes.

Manufacturer reserves the right to change, at any time, specifications and designs without notice and without obligations.

Performance Data (cont)

COOLING CAPACITY

060

EVAPORATOR AIR		CONDENSER ENTERING AIR TEMPERATURES °F (°C)																	
		75 (23.9)			85 (29.4)			95 (35)			105 (40.6)			115 (46.1)			125 (51.7)		
CFM / BF	EWB	Capacity MBtuh		Total Sys KW	Capacity MBtuh		Total Sys KW	Capacity MBtuh		Total Sys KW	Capacity MBtuh		Total Sys KW	Capacity MBtuh		Total Sys KW	Capacity MBtuh		Total Sys KW
		Total	Sens		Total	Sens		Total	Sens		Total	Sens		Total	Sens		Total	Sens	
1500 / .09	57	53.4	53.4	3.9	51.8	51.8	4.3	48.7	48.7	4.8	47.3	47.3	5.2	41.8	41.8	5.8	36.6	36.6	6.6
	62	55.5	49.1	3.9	53.3	47.9	4.3	50.1	45.4	4.8	48.6	47.1	5.2	43.0	42.2	5.8	37.6	36.9	6.6
	63*	56.6	39.7	3.9	54.3	38.4	4.3	50.6	37.1	4.8	48.5	40.0	5.2	42.5	37.8	5.8	36.4	35.4	6.6
	67	60.9	41.3	4.0	58.4	40.0	4.4	54.3	38.6	4.9	52.2	41.7	5.2	45.6	39.4	5.8	39.1	37.1	6.6
	72	66.3	33.0	4.0	63.7	31.6	4.4	59.4	30.4	4.9	56.9	32.5	5.2	49.8	30.3	5.9	42.6	28.2	6.6
1700 / .10	57	55.5	52.8	4.0	53.9	49.8	4.4	50.6	46.7	4.9	49.2	48.5	5.2	43.5	43.5	5.9	38.1	38.1	6.6
	62	56.2	50.6	4.0	53.9	49.4	4.4	50.7	46.7	4.9	49.2	48.5	5.2	43.5	43.5	5.9	38.1	38.1	6.6
	63*	56.8	40.9	4.0	54.5	39.5	4.4	50.7	38.2	4.9	48.7	41.2	5.2	42.6	38.9	5.9	36.5	36.5	6.6
	67	61.0	42.6	4.0	58.6	41.2	4.4	54.5	39.8	4.9	52.3	43.0	5.2	45.8	40.6	5.9	39.2	38.2	6.6
	72	66.5	34.0	4.1	63.9	32.5	4.5	59.6	31.3	5.0	57.0	33.5	5.3	49.9	31.2	5.9	42.8	29.0	6.7
1850 /.11	57	55.6	54.6	4.0	54.0	51.5	4.4	50.7	48.3	4.9	49.2	49.2	5.3	43.5	43.5	5.9	38.1	38.1	6.7
	62	56.2	52.9	4.0	54.0	51.1	4.4	50.7	48.3	4.9	49.2	49.2	5.3	43.5	43.5	5.9	38.1	38.1	6.7
	63*	56.8	42.2	4.0	54.6	40.9	4.4	50.8	39.5	4.9	48.7	42.6	5.3	42.6	40.3	5.9	36.5	36.5	6.7
	67	61.1	44.0	4.1	58.7	42.6	4.5	54.6	41.1	5.0	52.4	44.4	5.3	45.8	41.9	5.9	39.3	39.3	6.7
	72	66.6	35.2	4.1	63.9	33.6	4.5	59.6	32.4	5.0	57.1	34.6	5.3	50.0	32.3	6.0	42.8	30.0	6.8

See page 16 for notes.

HEATING CAPACITY

060

INDOOR AIR		OUTDOOR COIL ENTERING AIR TEMPERATURES °F (°C)																							
		-10 (-23.3)			0 (-17.8)			10 (-12.2)			20 (-6.7)			30 (-1.1)			40 (4.4)			50 (10)			60 (15.6)		
EDB	CFM	Capacity MBtuh		Total Sys KW	Capacity MBtuh		Total Sys KW	Capacity MBtuh		Total Sys KW	Capacity MBtuh		Total Sys KW	Capacity MBtuh		Total Sys KW	Capacity MBtuh		Total Sys KW	Capacity MBtuh		Total Sys KW	Capacity MBtuh		Total Sys KW
		Total	Integ		Total	Integ		Total	Integ		Total	Integ		Total	Integ		Total	Integ		Total	Integ		Total	Integ	
65°F (18.3°C)	1500	20.1	18.5	3.58	20.7	19.0	3.67	27.8	25.6	3.82	33.3	30.1	3.96	40.2	35.2	4.01	51.1	51.1	4.08	59.7	59.7	4.60	67.2	67.2	4.91
	1700	20.3	18.7	3.59	20.9	19.2	3.68	28.1	25.9	3.82	33.7	30.5	3.95	40.6	35.6	4.00	51.6	51.6	4.07	60.3	60.3	4.56	67.9	67.9	4.85
	1850	20.5	18.8	3.57	21.1	19.4	3.66	28.3	26.0	3.78	33.8	30.6	3.91	40.8	35.7	3.95	51.8	51.8	4.02	61.0	61.0	4.49	68.1	68.1	4.77
70°F (21.1°C)	1500	19.6	18.0	3.74	20.1	18.5	3.84	27.1	24.9	3.99	32.4	29.3	4.13	39.1	34.3	4.18	49.8	49.8	4.26	58.2	58.2	4.80	65.4	65.4	5.13
	1700	19.8	17.6	3.74	20.3	18.3	3.84	27.4	24.7	3.98	32.8	29.5	4.12	39.6	35.6	4.17	50.3	50.3	4.24	58.8	58.8	4.75	66.1	66.1	5.05
	1850	19.9	18.3	3.71	20.5	18.9	3.80	27.6	25.4	3.93	32.9	29.8	4.07	39.7	34.8	4.11	50.4	50.4	4.18	59.4	59.4	4.67	66.3	66.3	4.96
75°F (23.9°C)	1500	19.2	17.6	3.90	19.7	18.1	4.00	26.6	24.4	4.15	31.8	28.8	4.31	38.7	33.9	4.36	49.3	49.3	4.44	57.6	57.6	5.01	64.8	64.8	5.34
	1700	19.4	17.8	3.89	19.9	18.3	3.99	26.9	24.7	4.14	32.1	29.1	4.28	39.2	34.3	4.33	49.8	49.8	4.40	58.2	58.2	4.94	65.4	65.4	5.26
	1850	19.5	18.0	3.85	20.1	18.5	3.95	27.0	24.9	4.09	32.3	29.2	4.22	39.3	34.4	4.27	49.9	49.9	4.34	58.8	58.8	4.85	65.6	65.6	5.15

See page 16 for notes.

Manufacturer reserves the right to change, at any time, specifications and designs without notice and without obligations.

* At 75°F (23.9°C) entering dry bulb—Tennessee Valley Authority [TVA] rating conditions; all others at 80°F (26.7°C) entering dry bulb.

LEGEND

BF — Bypass Factor
edb — Entering Dry-Bulb
ewb — Entering Wet-Bulb
KW — Total Unit Power Input
rh — Relative Humidity

COOLING NOTES:

1. Ratings are net; they account for the effects of the evaporator-fan motor power and heat.
2. Direct interpolation is permissible. Do not extrapolate.
3. The following formulas may be used:

$$t_{ldb} = t_{edb} - \frac{\text{Sensible Capacity (Btuh)}}{1.09 \times \text{CFM}}$$

t_{lwb} = Wet-bulb temperature corresponding to enthalpy air leaving evaporator coil (h_{lwb})

$$h_{lwb} = h_{ewb} - \frac{\text{Total Capacity (Btuh)}}{(4.5 \times \text{CFM})}$$

Where: h_{ewb} = Enthalpy of air entering evaporator coil

‡

4. The Sensible Capacity is based on 80°F (26.7°C) edb temperature of air entering evaporator coil. Below 80°F (26.7°C) edb, subtract (corr factor x CFM) from Sensible Capacity. Above 80°F (26.7°C) edb, add (corr factor x CFM) to Sensible Capacity. Correction Factor = 1.09 x (1 - BF) x (edb - 80).
5. Integrated capacity is maximum (instantaneous) capacity less the effect of frost on the outdoor coil and the heat required to defrost it.

Manufacturer reserves the right to change, at any time, specifications and designs without notice and without obligations.

Performance Data (cont)

Filter Pressure Drop (IN. W.C.)

FILTER SIZE in. (mm)	CFM																	
	500	600	700	800	900	1000	1100	1200	1300	1400	1500	1600	1700	1800	1900	2000	2100	2200
20X20X1 (508X508X25)	0.05	0.07	0.08	0.10	0.12	0.13	0.14	0.15	—	—	—	—	—	—	—	—	—	—
20X24X1 (508X610x25)	—	—	—	0.08	0.09	0.10	0.11	0.13	0.14	0.15	0.16	—	—	—	—	—	—	—
24X30X1 (610X762x25)	—	—	—	0.04	0.05	0.06	0.07	0.07	0.08	0.09	0.10	—	—	—	—	—	—	—
24X36X1 (610X914X25)	—	—	—	—	—	—	—	0.06	0.07	0.07	0.08	0.09	0.09	0.10	0.11	0.12	0.13	0.14

Accessory Electric Heat Pressure Drop (IN. W.C.)

HEATER kW	CFM							
	800	1000	1200	1400	1600	1800	2000	2200
5-20	0.033	0.037	0.042	0.047	0.052	0.060	0.067	0.075

Manufacturer reserves the right to change, at any time, specifications and designs without notice and without obligations.

Wet Coil Air Delivery*

UNIT SIZE	SPEED TAP	TAP COLOR	AIR DELIVERY†	EXTERNAL STATIC PRESSURE (in. W.C.)									
				0.1	0.2	0.3	0.4	0.5	0.6	0.7	0.8	0.9	1
24	1	BLU	SCFM	905	695	635	580	515	445	385	345	310	275
	2	PNK	SCFM	920	830	770	740	690	640	565	505	455	400
	3	RED‡	SCFM	1015	990	935	890	845	800	760	720	665	635
	4	ORN	SCFM	1060	1030	975	930	890	845	805	760	705	670
	5	BLK	SCFM	1165	1130	1085	1045	1005	965	925	890	850	810
30	1	BLU	SCFM	995	875	935	775	690	945	575	520	480	385
	2	PNK	SCFM	1055	1005	960	915	855	775	735	685	655	610
	3	RED‡	SCFM	1210	1175	1135	1085	1045	1005	925	880	840	780
	4	ORN	SCFM	1225	1180	1135	1095	1055	1010	955	880	845	815
	5	BLK	SCFM	1355	1335	1295	1255	1215	1180	1140	1100	1045	990
36	1	BLU	SCFM	1195	1165	1120	1075	1020	975	930	865	820	765
	2	PNK	SCFM	1250	1210	1165	1115	1070	1025	950	910	870	820
	3	RED‡	SCFM	1410	1370	1330	1290	1245	1205	1165	1120	1080	1020
	4	ORN	SCFM	1430	1380	1340	1295	1255	1220	1175	1135	1080	1000
	5	BLK	SCFM	1535	1495	1455	1415	1375	1335	1300	1260	1220	1155
42	1	BLU	SCFM	1400	1360	1305	1250	1200	1140	1085	1035	985	885
	2	PNK	SCFM	1455	1415	1365	1315	1260	1200	1155	1115	1070	1020
	3	RED	SCFM	1480	1425	1370	1320	1265	1215	1160	1105	1055	1030
	4	ORN‡	SCFM	1535	1505	1460	1410	1360	1305	1255	1210	1175	1130
	5	BLK	SCFM	1645	1600	1555	1500	1455	1410	1365	1315	1255	1215
48	1	BLU	SCFM	1580	1545	1515	1480	1440	1400	1360	1345	1285	1250
	2	PNK	SCFM	1645	1610	1570	1535	1500	1460	1420	1380	1345	1315
	3	RED‡	SCFM	1750	1725	1690	1655	1620	1585	1550	1510	1475	1440
	4	ORN	SCFM	1780	1755	1720	1690	1655	1625	1590	1555	1515	1480
	5	BLK	SCFM	1905	1875	1845	1815	1780	1755	1720	1685	1655	1625
60	1	BLU	SCFM	1705	1675	1635	1600	1555	1515	1470	1420	1370	1320
	2	PNK	SCFM	1755	1720	1685	1645	1605	1565	1525	1475	1430	1380
	3	RED‡	SCFM	1880	1850	1815	1775	1745	1705	1665	1625	1590	1545
	4	ORN	SCFM	1900	1875	1840	1800	1765	1730	1695	1655	1620	1575
	5	BLK	SCFM	2010	1985	1950	1915	1885	1850	1815	1780	1745	1705

*. Air delivery values are based on operating voltage of 230v, wet coil, without filter or electric heater. Deduct filter and electric heater pressure drops to obtain static pressure available for ducting.
†. Standard Cubic Feet per Minute
‡. Factory-shipped cooling speed.

NOTES:
1. Do not operate the unit at a cooling airflow that is less than 350 CFM for each 12,000 Btuh of rated cooling capacity. Evaporator coil frosting may occur at airflows below this point.

Electrical Data

MODEL	NOMINAL V-PH-HZ	VOLTAGE RANGE		COMPRESSOR		OFM	IFM	NOMINAL ELECTRIC HEAT*	POWER SUPPLY		
		MIN	MAX	RLA	LRA	FLA	FLA	kW	FLA	MCA	MOCP†
24	208/230-1-60	197	253	9.9	63	0.94	2.7	-/-	-/-	16	25
								3.8/5	18/20.8	38.5/42	40/45
								5.6/7.5	27/31.3	49.8/55.1	50/60
								7.5/10	36.1/41.7	61.1/68.1	70/70
30	208/230-1-60	197	253	12.5	67	0.94	3.9	-/-	-/-	20.4	30
								3.8/5	18/20.8	43/46.5	45/50
								5.6/7.5	27/31.3	54.2/59.6	60/60
								7.5/10	36.1/41.7	65.6/72.6	70/80
36	208/230-1-60	197	253	14.4	86	1.5	3.9	-/-	-/-	23.4	35
								3.8/5	18/20.8	45.9/49.4	50/50
								5.6/7.5	27/31.3	57.2/62.5	60/70
								7.5/10	36.1/41.7	68.5/75.5	70/80
								11.3/15	54.1/62.5	91/101.5	100/110
42	208/230-1-60	197	253	16.2	96	1.5	3.9	-/-	-/-	25.7	40
								3.8/5	18/20.8	48.2/51.7	50/60
								5.6/7.5	27/31.3	59.4/64.8	60/70
								7.5/10	36.1/41.7	70.8/77.8	80/80
								11.3/15	54.1/62.5	93.3/103.8	100/110
48	208/230-1-60	197	253	23.8	102	1.5	5.1	-/-	-/-	36.4	60
								3.8/5	18/20.8	58.9/62.4	60/70
								5.6/7.5	27/31.3	70.1/75.5	80/80
								7.5/10	36.1/41.7	81.5/88.5	90/90
								11.3/15	54.1/62.5	104/114.5	110/125
								15/20	72.1/83.3	126.5/140.5	150/150
60	208/230-1-60	197	253	24.9	148	1.9	6.9	-/-	-/-	39.9	60
								3.8/5	18/20.8	62.4/65.9	70/70
								5.6/7.5	27/31.3	73.7/79.1	80/80
								7.5/10	36.1/41.7	85.1/92.1	90/100
								11.3/15	54.1/62.5	107.6/118.1	110/125
								15/20	72.1/83.3	130.1/144.1	150/150

* kW @ 208/240 - Heater capacity (kW) based on heater voltage of 208v & 240v. If power distribution voltage to unit varies from rated heater voltage, heater kW will vary accordingly.

† HACR Type Circuit Breaker

LEGEND
FLA - Full Load Amps
LRA - Locked Rotor Amps
MCA - Minimum Circuit Amps
MOCP - Maximum Overcurrent Protection
RLA - Rated Load Amps

NOTES:

1. In compliance with NEC (National Electrical Code) requirements for multimotor and combination load equipment (refer to NEC Articles 430 and 440), the overcurrent protective device for the unit shall be Power Supply fuse or circuit breaker.
2. Minimum wire size is based on 60_C copper wire. If other than 60_C wire is used, or if length exceeds wire length in table, determine size from NEC.

Typical Installation

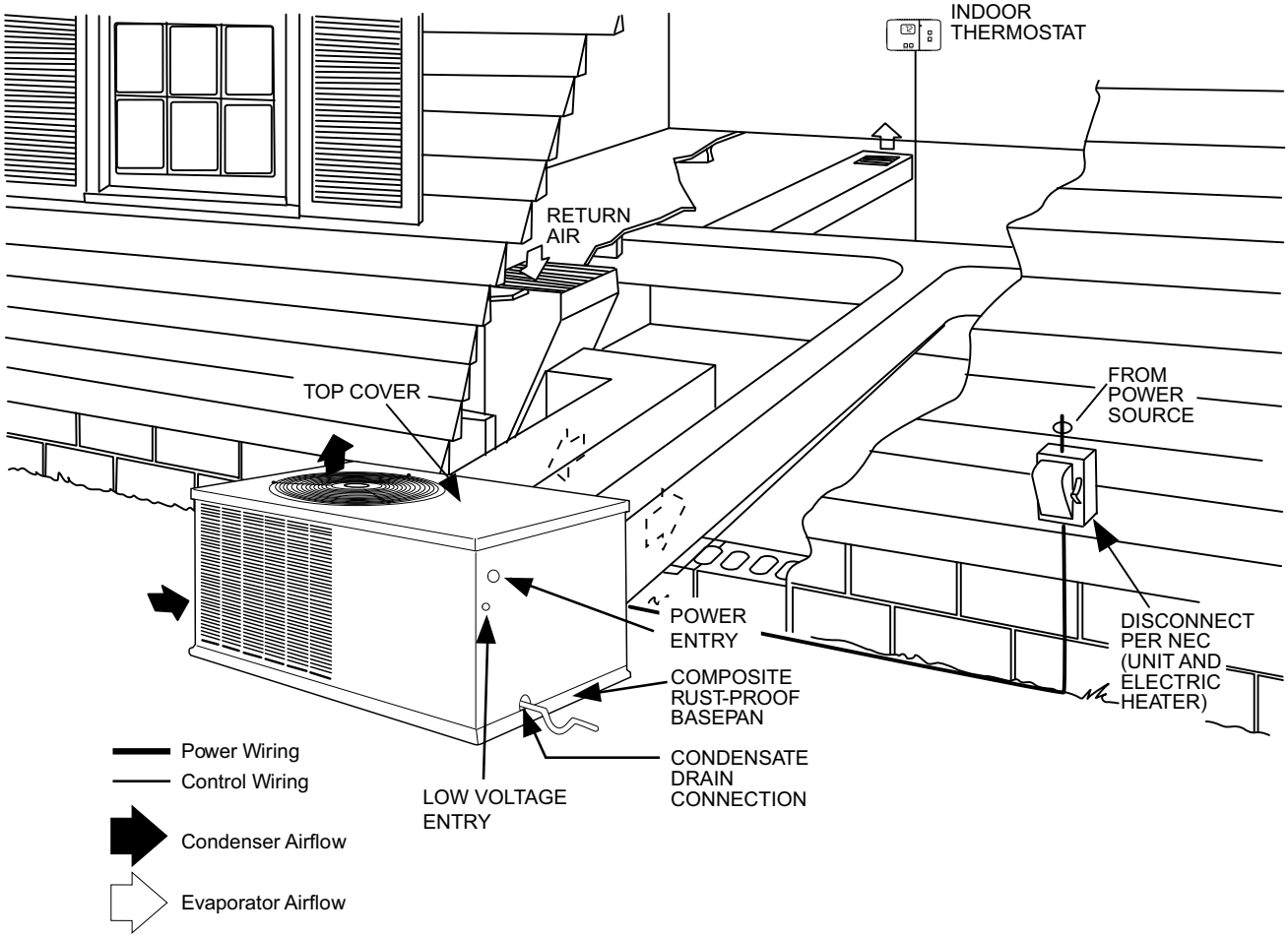

A10135

Typical Connection Wiring Schematic

208/230-1-60

CONNECTION WIRING DIAGRAM
DANGER: ELECTRICAL SHOCK HAZARD DISCONNECT POWER BEFORE SERVICING

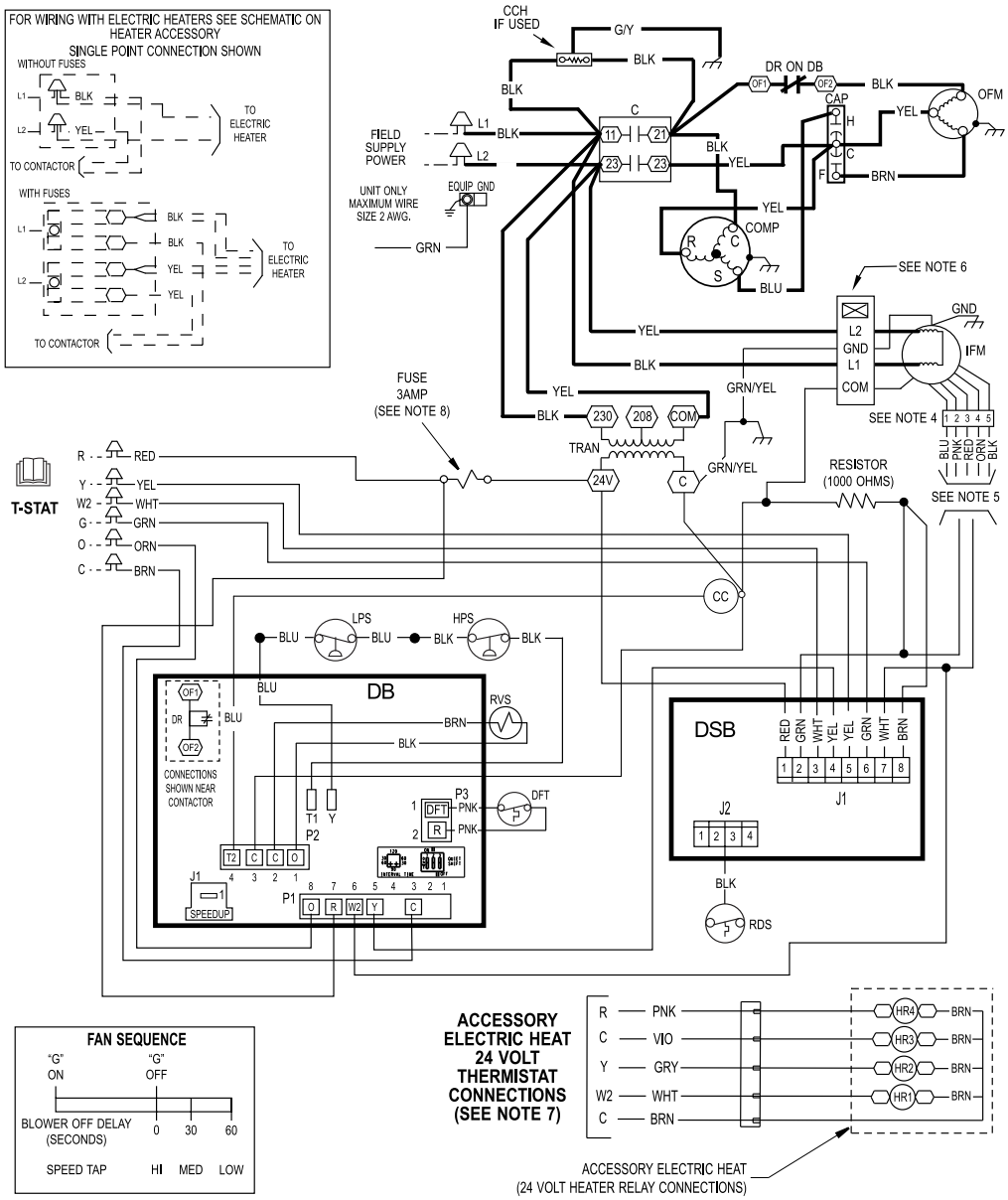

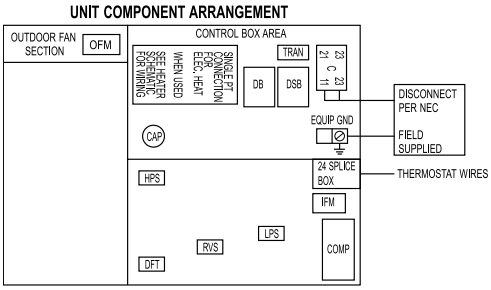

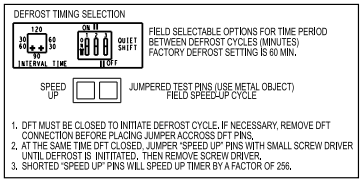

NOTES:

1. IF ANY OF THE ORIGINAL WIRES FURNISHED ARE REPLACED, IT MUST BE REPLACED WITH THE SAME TYPE OF WIRE OR IT'S EQUIVALENT.
2. SEE PRICE PAGES FOR THERMOSTAT.
3. USE CONDUCTORS SUITABLE FOR AT LEAST 75˚C (167˚F) FOR FIELD INSTALLATION.
4. FACTORY WIRING FOR SPEED SELECTOR PLUG
5. CONSULT INSTALLATION INSTRUCTIONS FOR FACTORY SPEED TAP SETTINGS. CHANGING OF SPEED TAPS MAY BE REQUIRED WHEN USING FIELD INSTALLED ELECTRIC HEATERS, SEE INSTALLATION INSTRUCTIONS
6. "DO NOT DISCONNECT PLUG UNDER LOAD."
7. MULTI-STAGE HEATER SHOWN. SINGLE STAGE HEATERS HAVE WHITE AND BROWN WIRES ONLY.
8. FUSE MANUFACTURED BY LITTLELFUSE, P/N 257003.
9. N.E.C. CLASS 2 24 V.

A250302

Typical Ladder Wiring Schematic
208/230-1-60

LADDER WIRING DIAGRAM
DANGER: ELECTRICAL SHOCK HAZARD DISCONNECT POWER BEFORE SERVICING

LEGEND

△	FIELD SPLICE	——	FACTORY WIRING	——	FACTORY HI VOLTAGE	**CCH**	CRANKCASE HEATER
⬭	TERMINAL (MARKED)	— —	FIELD CONTROL WIRING	**C**	CONTACTOR	**COMP**	COMPRESSOR MOTOR
○	TERMINAL (UNMARKED)	—— -	FIELD POWER WIRING	**CAP**	CAPACITOR	**DSB**	DISSIPATION BOARD
●	SPLICE	— - -	ACCESSORY OR OPTIONAL WIRING	**CC**	CONTACTOR COIL	**DB**	DEFROST BOARD
DFT	DEFROST THERMOSTAT	**HR**	HEATER RELAY	**P**	PLUG		
DR	DEFROST RELAY	**IFM**	INDOOR FAN MOTOR	**RVS**	REVERSING VALVE SOLENOID		
GND	GROUND	**LPS**	LOW PRESSURE SWITCH	**TRAN**	TRANSFORMER		
HPS	HIGH PRESSURE SWITCH	**OFM**	OUTDOOR FAN MOTOR	**T-STAT**	THERMOSTAT		

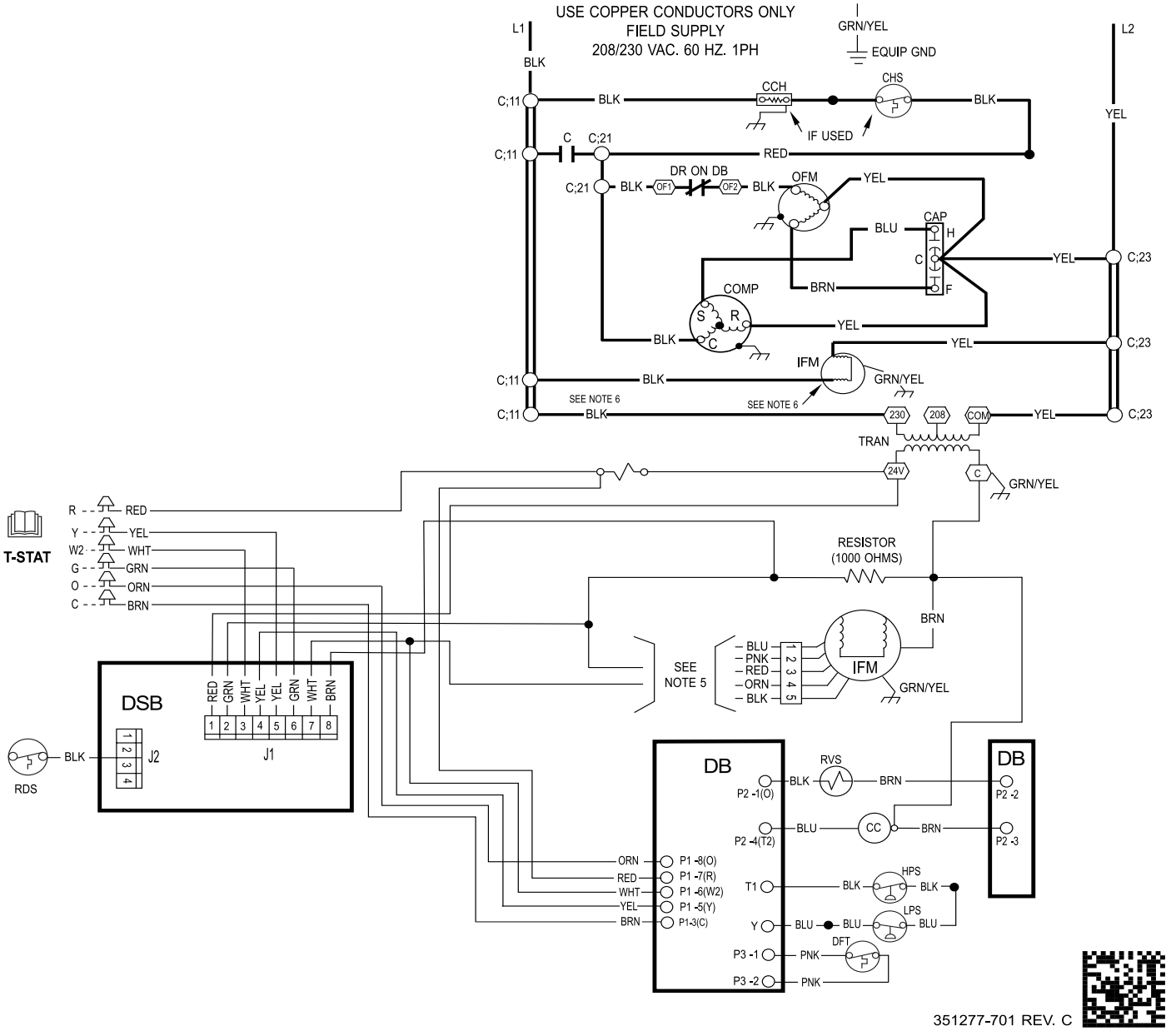

Typical Wiring Schematic (cont)

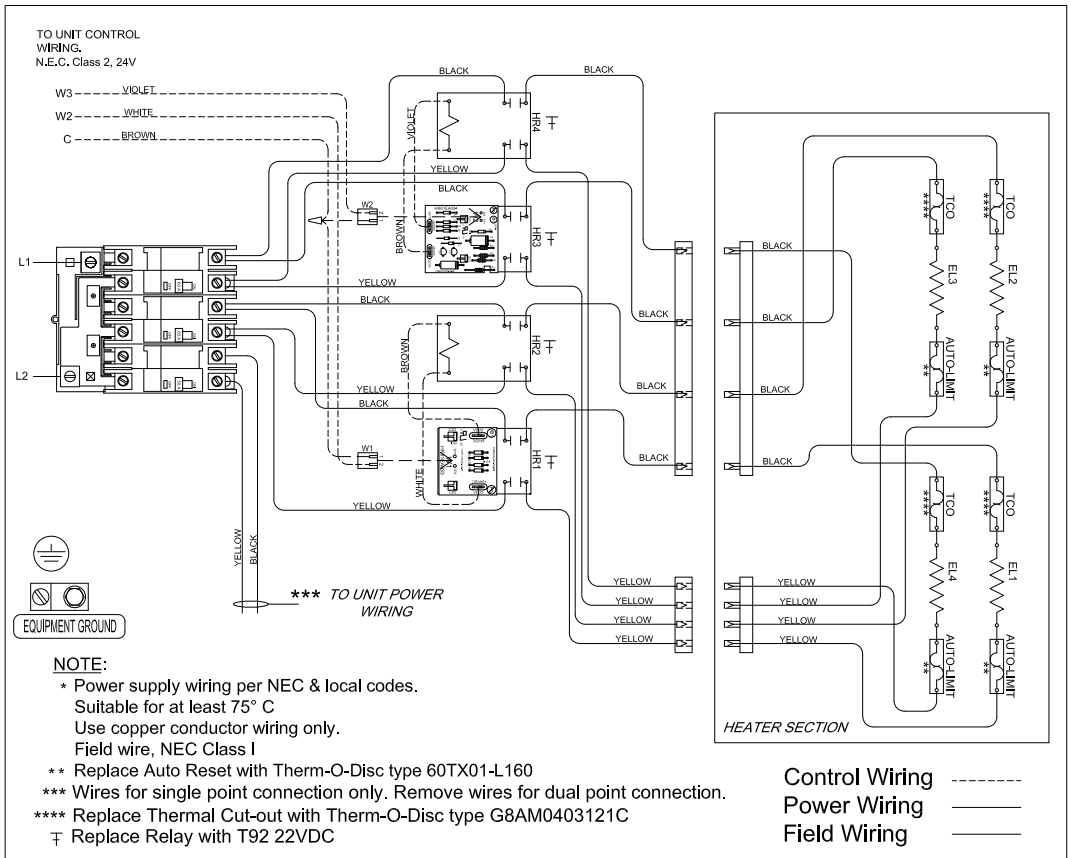

KILOWATTS	VOLTS	PHASE	HERTZ	CONTROL VOLTS	STEPS	HEATER AMPS	CIRCUIT BREAKER		
							C.B. # 1	C.B. # 2	C.B. # 3
15.0/20.0	208/240	1	60	24 AC	2	72.1/83.3	50A	60A	60A
CPHEATER132A03 (110070158)									

A190339

Accessory Electric Heater Wiring

Controls

Sequence of operation

When power is supplied to unit, the transformer (TRAN) is energized.

Cooling Operation — With a call for cooling (O,Y,G), the reversing valve, contactor, and indoor fan are energized. When the cooling demand is met, Y and G are de-energized, shutting off the contactor (compressor, outdoor fan). The indoor fan stops after a 60 second delay.

Heating Operation — With a call for heating (Y,G), the contactor and indoor fan are energized. When the heating demand is met, Y and G are de-energized, shutting off the contactor (compressor, outdoor fan). The indoor fan stops after a 60 second delay.

Continuous Fan — With the continuous indoor fan option selected on the thermostat, G is continuously energized keeping the indoor fan running at all times.

Demand Defrost Mode— The defrost mode is factory set to an initial 60-minute time interval. It may also be adjusted to an initial interval of 30, 90, or 120 minutes. During operation, the control optimizes current defrost time based on the previous defrost interval and previous defrost period. If the previous defrost period is less than 2 minutes for two consecutive defrost cycles the control will lengthen the defrost interval by 15 minutes, up to a maximum of 120 minutes or 30 minutes greater than the original setpoint, whichever comes first. If the previous defrost period is more than 5 minutes for two consecutive defrost cycles the control will shorten the defrost interval by 15 minutes, down to a minimum of 30 minutes or 30 minutes from the original setpoint, whichever is first.

After the defrost condition is satisfied, or after a maximum of 10 minutes in defrost mode, the unit will resume normal heating operation.

Application Data

Condensate trap — A 2-in. (51 mm) condensate trap must be field supplied.

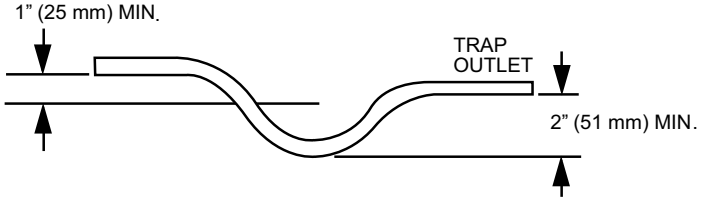

A08001

Maximum cooling airflow — To minimize the possibility of condensate blow-off from the evaporator, airflow through the units should not exceed 450 CFM/ton.

Minimum cooling airflow — The minimum cooling airflow is 350 CFM/ton.

Minimum cooling operating outdoor air temperature — All standard units have a minimum ambient operating temperature of 40°F (4.4°C). With accessory low ambient temperature kit, units can operate at temperatures down to 0°F (-17.8°C).

Maximum operating outdoor air temperature — Maximum outdoor operating air temperature for cooling is 125°F (51.7°C).

Guide Specifications

SMALL PACKAGED PRODUCT AIR-TO-AIR HEAT PUMP CONSTANT VOLUME APPLICATION

SIZE RANGE:2 TO 5 TONS, NOMINAL (COOLING)

General

SYSTEM DESCRIPTION

Outdoor packaged, electrically controlled, air-to-air heat pump utilizing a scroll compressor for heating and cooling duty. Unit shall discharge supply air horizontally as shown on contract drawings.

QUALITY ASSURANCE

- Unit shall be rated in accordance with AHRI Standards 210/240 and 270.
- Unit shall be designed and certified in accordance with UL 60335-2-40 and 60335-1.
- Unit shall be manufactured in a facility registered to ISO 9001 manufacturing quality standard.
- Insulation and adhesives shall meet NFPA 90A requirements for flame spread and smoke generation.
- Cabinet insulation shall meet ASHRAE Standard 62P.

DELIVERY, STORAGE, AND HANDLING

- Unit shall be stored and handled per manufacturer's recommendations.

Products

EQUIPMENT

General:

Factory-assembled, single piece, air-to-air heat pump. Contained within the unit enclosure shall be all factory wiring, piping, controls, and refrigerant charge (R-454B).

Unit Cabinet:

- Unit cabinet shall be constructed of phosphated, bonderized, zinc-coated, prepainted steel.
- Basepan shall be made of a single-piece non-corrosive, composite material.
- Indoor fan compartment cabinet surfaces shall be insulated with a minimum 1/2 in. (12.7 mm) thick, flexible insulation, coated on the air side, with aluminum foil-faced insulation.
- Cabinet panels shall be easily removable for servicing.
- Unit shall have a factory-installed, sloped, noncorrosive, condensate drain.
- Unit insulation conforms to ASHRAE 62P.

Fans:

Indoor Blower (Indoor Fan):

- Fan shall be multispeed, direct drive as shown on the equipment drawings.
- Fan wheel shall be made from steel, be double-inlet type. It shall have forward-curved blades with a corrosion-resistant finish and shall be dynamically balanced.

Outdoor fan shall be of the direct-driven propeller type with aluminum blades, riveted to corrosion-resistant steel spiders. It shall be dynamically balanced, and shall discharge air upwards.

Compressor:

- Fully-hermetic scroll type with external vibration isolation.

Coils:

- Indoor coils shall have aluminum-plate fins mechanically bonded to seamless aluminum tubes with all joints brazed. Outdoor coils shall have copper tubes.
- Tube sheet openings shall be bellied to prevent tube wear.
- Outdoor coil shall be protected by metal louvered panels.

Refrigerant Components:

- TXV and AccuRater feed system.
- Service gauge connections on suction and discharge lines.
- Equipped with liquid line filter drier.
- Equipped with accumulators on all sizes.

Controls and Safeties:

Unit Controls:

- Unit shall be complete with self-contained low voltage control circuit.
- Unit shall incorporate an outdoor coil defrost system to prevent excessive frost accumulation during heating cycle and shall be controlled as follows:
  a. Defrost shall be initiated on the basis of time and coil temperature.
  b. A 30/60/90/120-minute timer shall activate defrost cycle only if coil temperature is low enough to indicate a heavy frost condition.
  c. Defrost cycle shall terminate when defrost thermostat is satisfied or shall have a positive termination time of 10 minutes.

Safeties:

- High Pressure Switch
- Loss of Charge Switch

Operating Characteristics:

- Unit shall be capable of starting and running at 125°F (51.7°C) ambient outdoor temperature (60 size max ambient is 115°F [46.1°C]).
- Compressor with standard controls shall be capable of operation down to 40°F (4.4°C) ambient outdoor temperature in cooling duty.
- Compressor shall be capable of operation in heating cycle down to -20°F (-28.9°C) ambient outdoor-air temperature.
- Unit shall be capable of simultaneous heating duty and defrost cycle operation when using electric heaters indicated in Accessory Kits section.

Electrical Requirements:

All unit power wiring shall enter unit cabinet at a single location.

Motors:

- Compressor motors shall be of the refrigerant-cooled type with line break thermal and current overload protection.
- All fan motors shall have permanently lubricated bearings and inherent automatic-reset thermal overload protection.
- Outdoor-fan motor shall be totally enclosed.

Grille

- Louvered Grille:
  Louvered grille shall be standard on all units.

Accessory Kits Available

- Low-Ambient Package:
  Pressure-based control to allow cooling operation down to 0°F (-17.7°C).
- Crankcase Heater:
  Shall provide anti-floodback protection for low-load cooling applications.
- Electric heaters:
  Electric heater shall be available as a field-installed option.
  Heater elements shall be open wire type, adequately supported and insulated with ceramic bushings.
  Electric heater packages must provide single point power connection capability.
- Compressor Start Kit:
  Shall be available to give a boost to the compressor motor at each start-up.

© 2025 Carrier. All rights reserved.

Manufacturer reserves the right to change, at any time, specifications and designs without notice and without obligations.