# INSTALLATION INSTRUCTIONS

## MANUFACTURED (MOBILE) HOME KIT
## FOR USE WITH 35 IN. (889 MM) TALL CONDENSING GAS FURNACE CONVERSION KIT

# NAHC00101MH

**NOTE**: Read the entire instruction manual before starting the installation.

## SAFETY CONSIDERATION

### ⚠ WARNING

**FIRE, EXPLOSION, ELECTRICAL SHOCK, AND CARBON MONOXIDE POISONING HAZARD**

Failure to follow this warning could result in personal injury or death.

This conversion kit shall be installed by a qualified service agency in accordance with the manufacturer's instructions and all applicable codes and requirements of the authority having jurisdiction. If the information in these instructions is not followed exactly, a fire, explosion, or production of carbon monoxide could result causing property damage, personal injury, or loss of life. The qualified service agency is responsible for the proper installation of this furnace with this kit. The installation is not proper and complete until the operation of the converted appliance is checked as specified in the manufacturer's instructions supplied with the kit.

### ⚠ AVERTISSEMENT

**LE FEU, L'EXPLOSION, CHOC ELECTRIQUE, ET MONOXYDE DE CARBONE EMPOISONNER**

Cette trousse de conversion doit être installée par un servie d'entretien qualifié, selon les instructions du fabricant et selon toutes les exigences et tous les codes pertinents de l'autorité compétente. Assurezvous de bien suivre les instructions dans cette notice pour réduire au minimum le risque d'incendie, d'explosion ou la production de monoxyde de carbone pouvant causer des dommages matériels, de blessure ou la mort. Le service d'entretien qualifié est responsable de l'installation de cette trousse. L'installation n'est pas adéquate ni complète tant que le bon fonctionnement de l'appereil converti n'a pas été vérfié selon les instructions du fabricant fornies avec la trousse.

Installing and servicing heating equipment can be hazardous due to gas and electrical components. Only trained and qualified personnel should install, repair, or service heating equipment.

Untrained personnel can perform basic maintenance functions such as cleaning and replacing air filters. Trained service personnel must perform all other operations. When working on heating equipment, observe precautions in the literature, on tags, and on labels attached to or shipped with the unit, and other safety precautions that may apply.

Follow all safety codes. In the United States, follow all safety codes including the current edition of the National Fuel Gas Code (NFGC) NFPA No. 54/ANSI Z223.1. In Canada, refer to the current edition of the National Standard of Canada, Natural Gas and Propane Installation Codes (NSCNGPIC), CAN/CSA-B149.1 and .2. Wear safety glasses and work gloves. Have a fire extinguisher available during start-up, adjustment steps, and service calls.

Recognize safety information. This is the safety-alert symbol ⚠. When you see this symbol on the furnace and in instructions or manuals, be alert to the potential for personal injury. Understand the signal words DANGER, WARNING, CAUTION and NOTE. The words DANGER, WARNING, and CAUTION are used with the safety alert symbol. DANGER identifies the most serious hazards which **will** result in severe personal injury or death. WARNING signifies a hazard which **could** result in personal injury or death. CAUTION is used to identify unsafe practices which **may** result in minor personal injury or product and property damage. NOTE is used to highlight suggestions which **will** result in enhanced installation, reliability, or operation.

## INTRODUCTION

### ⚠ WARNING

**FIRE, EXPLOSION, ELECTRICAL SHOCK AND CARBON MONOXIDE POISONING HAZARD**

Failure to follow instructions could result in personal injury, death or property damage.

Improper installation, adjustment, alteration, service, maintenance, or use can cause carbon monoxide poisoning, explosion, fire, electrical shock, or other conditions, which could result in personal injury or death. Consult your distributor or branch for information or assistance. The qualified installer or agency must use only factory-authorized kits or accessories when servicing this product.

### ⚠ WARNING

**FIRE, EXPLOSION, ELECTRICAL SHOCK HAZARD**

Failure to follow this warning could result in personal injury, death or property damage.

Gas supply MUST be shut off before disconnecting electrical power and proceeding with conversion.

This instruction covers the installation of kit Part No. NAHC00101MH in the following gas furnaces for manufactured (mobile) home applications.

This kit is only for use in single stage 40,000 through 120,000 Btuh gas input models when installed as a direct vent (2-pipe) furnace.

**NOTE**: This kit is not approved for the 140,000 Btuh gas input model furnace, any 2-stage and variable speed models, any

non-direct vent (1-pipe) applications nor any furnace that does not have a sealed combustion system with provisions for outside air.

| 40,000 to 120,000 BTUH MODEL NUMBERS BEGINNING WITH: | | | | | |
|---|---|---|---|---|---|
| (F,G)9MXE | N9MSE | N9MSB | R9MSB | WFSR | WFSX |
| N95ES | N92ES | R95ES | R92ES | WFAR | WFAX |

**Table 1 – Kit Contents**

| Qty. | Description |
|---|---|
| 1 | Adjustment Tool |
| 1 | Drill Bit 7/64” |
| 1 | Gas Valve |
| 1 | Connector 1/8” NPT |
| 1 | Elbow, Street Brass 1/8” NPT |
| 1 | Elbow, Street 150# 1/8” NPT |
| 1 | Tee, Street Brass |
| 1 | Tee Brass |
| 1 | Nipple HEX Brass |
| 7 | Screw HEX HD 8AB 3/4 |
| 1 | Pressure Switch |
| 1 | Wire Tie |
| 7 | Orifice 1.25mm |
| 1 | Wire Assembly |
| 1 | Wire Assembly |
| 1 | Installation Label |
| 1 | Adhesive Pouch |
| 1 | Label, Conversion |
| 1 | Conversion Rating Plate |
| 1 | Instructions |

## DESCRIPTION AND USAGE

This kit is designed for use in the furnaces listed in the Introduction. This kit is required for furnaces that use natural gas or propane gas. These instructions describe the modifications required for use in a manufactured (mobile) home. See Table 1 for kit contents.

This conversion uses a White-Rodgers 36J convertible (natural or propane) gas valve. More parts are shipped in the kit than will be needed to complete the conversion. When installation is complete, the extra parts are to remain with the furnace for future use.

This furnace must be installed in accordance with the manufacturer’s instructions and Manufactured Home Construction and Safety Standard, Title 24 CFR, Part 3280 or, when such standard is not applicable, the ANSI A225.1, Standard for Manufactured Home Installation (Manufactured Home Sites, Communities and Set-Ups), or the Mobile Homes Standard CAN/CSA-Z240 MH Series-09.

Ce générateur d’air chaud doit être installé conformément avec les instructions du fabricant et la norme intitulée Manufactured Home Construction and Safety Standard, Title 24 CFR, Part 3280 ou, lorsque cette norme ne s’applique pas, la norme ANSI A225.1, intitulée Standard for Manufactured Home Installation (Manufactured Home Sites, Communities and Set-Ups), ou la norme CAN/CSA-Z240 MH Série 09 de I’ACNOR, intitulée Maisons mobiles.

This furnace must be installed as a direct-vent/2-pipe (combustion air and flue) system. In a direct-vent system, all air for combustion is taken directly from the outside atmosphere, and all flue products (exhaust) are discharged to the outside atmosphere. See furnace and factory accessory concentric vent kit instructions for proper installation.

**NOTE**: The factory accessory concentric vent kit when used for sidewall termination MUST NOT project more than 3 in. (76 mm) beyond the surface of the wall. See the appropriate section for installation modification.

SECTION I: Initial Kit Installation

SECTION II: Conversion from Natural Gas to Propane

SECTION III: Conversion from Propane to Natural Gas

## SECTION I: INITIAL KIT INSTALLATION

### General

A downflow furnace application is where furnace blower is located above combustion and controls section of furnace, and conditioned air is discharged downwards.

Attach adhesive pouch containing literature packet and gas conversion parts to outside of main furnace door or accessible side of furnace for use at a later date. (See Fig. 1)

**⚠ WARNING**

**PERSONAL INJURY AND UNIT DAMAGE HAZARD**

Failure to follow this warning could result in personal injury or unit damage.

When installing the air conditioning coil casing or when servicing air conditioning, caution must be taken to ensure furnace will not fall forward.

**⚠ CAUTION**

**UNIT DAMAGE HAZARD**

Failure to follow this caution may result in damage to the unit.

To prevent damage during transportation of the home, coil casing must be secured to the floor, furnace and coil casing must be fastened together, and furnace must be secured to wall of the structure. When a coil casing is not used, an accessory floor base is required. (See furnace rating plate or clearance label for special accessory floor base part number.) Secure floor base to structure and attach furnace to floor base.

### RECOMMENDED METHODS OF SECURING FOR TYPICAL INSTALLATION (See Fig. 1)

All mounting hardware is field-supplied.

1. Secure coil casing to floor.
   a. Secure coil casing to floor of structure using 5/16-in. (8 mm) lag screws (one each side) through lower inside flanges of coil casing.
   b. Alternate method: Attach right angle mounting brackets or pipe strap (bent 90 degrees) to coil casing using No. 10 self tapping screws. Attach other end of brackets/strap to floor of structure using 5/16-in. (8 mm) lag screws. If coil is present in casing, be careful not to damage condensate pan with tip of screw or remove coil from casing.
2. Fasten furnace to coil casing. Be careful not to damage it with tip of screw.
   a. Secure furnace to coil casing using two No. 10 self tapping screws (one on each side of burner enclosure) through cell panel flange, lower furnace casing plate, and coil casing top flange.
   b. Alternate method: Attach pipe strap to both furnace casing and coil casing (one each side).

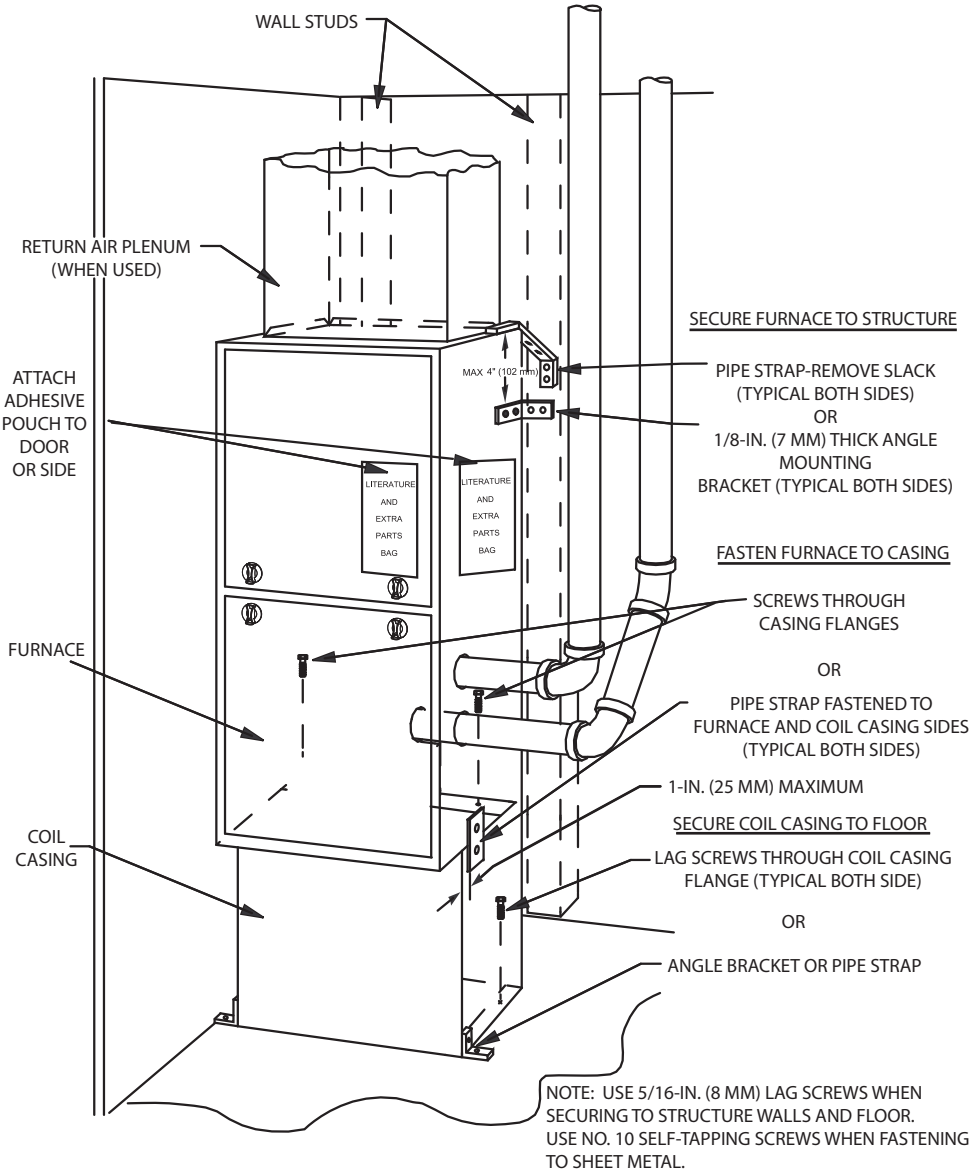


**Fig. 1 - Securing Furnace to Structure**

3. Secure furnace to structure.
   a. Attach pipe strap to top of furnace casing using No. 10 self-tapping screws. Angle strap down and away from back of furnace, remove all slack, and fasten to wall stud of structure using 5/16-in. (8 mm) lag screws. Typical both sides of furnace.
   b. Alternate method: Secure furnace to wall stud using 1/8-in. (8 mm) thick right-angle brackets. Attach brackets to furnace using No. 10 self tapping screws, and to wall stud using 5/16-in. (8 mm) lag screws.

**WHEN COIL CASING IS NOT INSTALLED (NOT SHOWN)**

1. Accessory floor base MUST be used. Review floor base Installation Instructions before installation.
2. Secure accessory floor base to structure using 5/16-in. (8 mm) lag screws.
3. Fasten furnace to accessory floor base using No. 10 self tapping screws through tabs on both sides of base (two each side).

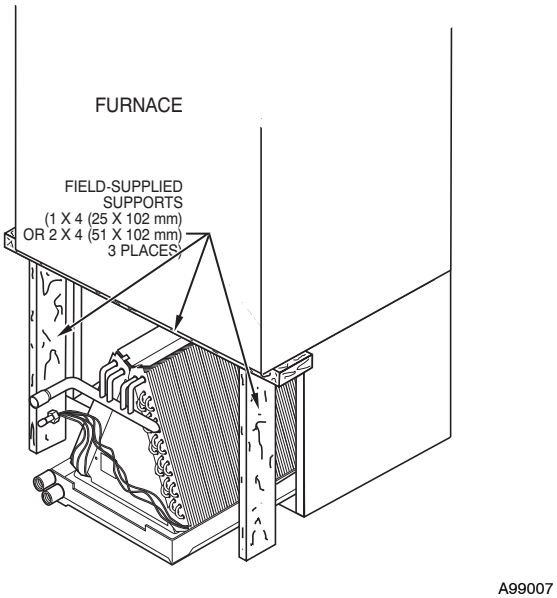


**Fig. 2 - Furnace Support for Servicing Indoor Coil**

## REPLACE GAS VALVE

**⚠ CAUTION**

**UNIT OPERATION HAZARD**

Failure to follow this caution may result in unit damage or improper operation.

Label all wires prior to disconnection when servicing controls.

**⚠ PRUDENCE**

**D'EQUIPEMENT D'OPERATION**

Toute erreur de câblage peut être une source de danger et de panne.

Lors des opérations d'entretien des commandes, étiqueter tous les fils avant de les déconnecter.

**⚠ WARNING**

**FIRE, EXPLOSION, ELECTRICAL SHOCK HAZARD**

Failure to follow this warning could result in personal injury, death or property damage.

Gas supply MUST be shut off before disconnecting electrical power and proceeding with conversion.

**⚠ WARNING**

**ELECTRICAL SHOCK, FIRE OR EXPLOSION HAZARD**

Failure to follow this warning could result in personal injury, death or property damage.

Before installing, modifying, or servicing system, main electrical disconnect switch must be in the OFF position and install a lockout tag. There may be more than one disconnect switch. Lock out and tag switch with a suitable warning label. Verify proper operation after servicing.

1. Set room thermostat to lowest setting or OFF.
2. Disconnect power at external disconnect, fuse or circuit breaker.
3. Turn off gas at external shut-off or gas meter.
4. Remove outer doors and set aside.
5. Turn electric switch on gas valve to OFF.
6. Disconnect the gas pipe from gas valve and remove pipe from the furnace casing.
7. Disconnect the connector harness from gas valve Disconnect wires from Hot Surface Igniter (HSI) and Flame Sensor. (See Fig. 5)
8. Support the manifold and remove the 4 screws that secure the manifold assembly to the burner box and set aside.
9. Note the location of the green/yellow wire ground wire for re-assembly later. (See Fig. 4)
10. Remove production gas valve from manifold assembly and discard valve.

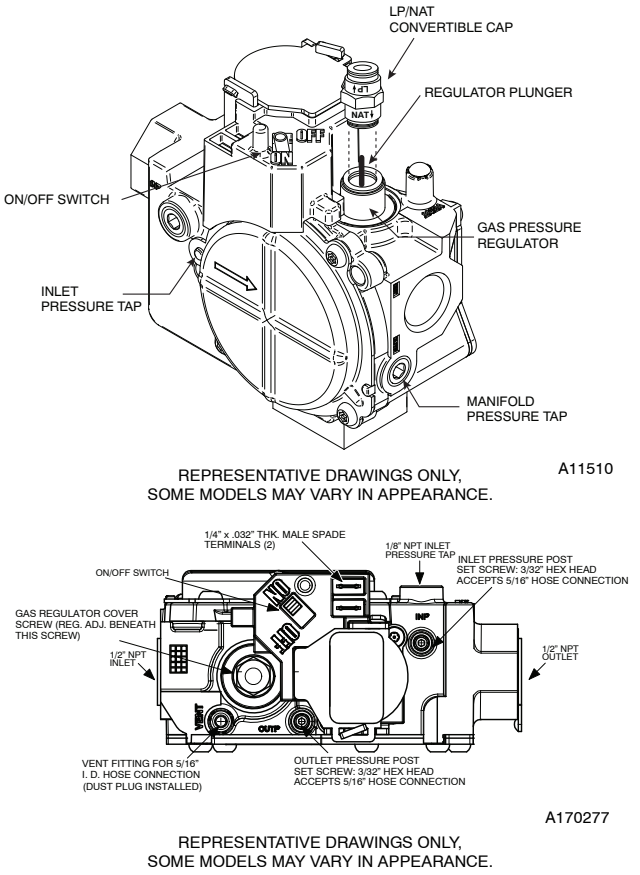


**Fig. 3 - Convertible Gas Valve**

**NOTE**: Production gas valve has a slotted cap on regulator adjustment cap. The convertible valve has cap marked NAT and LP.

11. Install new convertible gas valve to manifold. (See Fig. 4)

**NOTE**: Use a back-up wrench on the gas valve to prevent the valve from rotating on the manifold or damaging the mounting to the burner box.

**NOTE**: Use propane-gas-resistant pipe dope to prevent gas leaks. DO NOT use PTFE thread-seal tape.

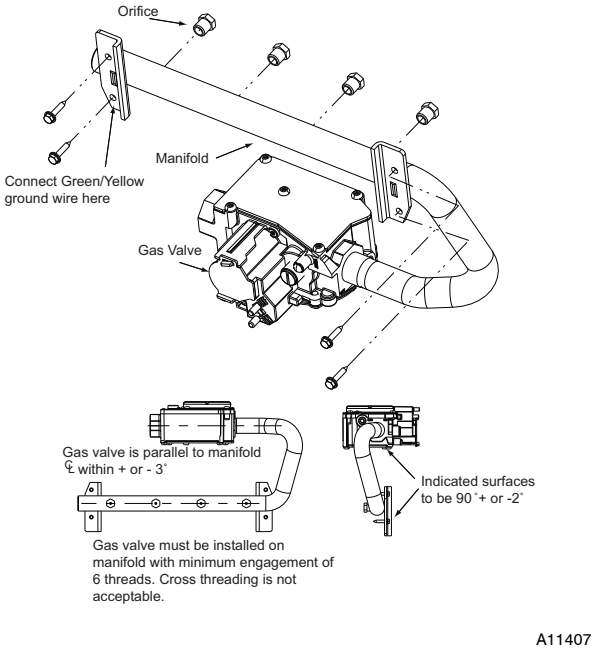


**Fig. 4 - Manifold Assembly**

## INSTALL MANIFOLD-Natural Gas Only



Specifications subject to change without notice.

**NOTE**: Install manifold if conversion is for use with natural gas. For propane applications, manifold will be installed after Low Gas Pressure Switch is installed.

1. Refer to Fig. 4 and 5.
2. Align the orifices in the manifold assembly with the support rings on the end of the burner.
3. Insert the orifices in the support rings of the burners. Manifold mounting tabs should fit flush against the burner box.

**NOTE:** If manifold does not fit flush against the burner box, the burners are not fully seated forward. Remove the manifold and check burner positioning in the burner box assembly.

4. Attach the green/yellow wire and ground terminal to one of the manifold mounting screws. (See Fig. 4)
5. Install the remaining manifold mounting screws.
6. Connect the wires to the flame sensor and hot surface igniter.
7. Connect the connector harness to gas valve.

**NOTE:** Use only propane-resistant pipe dope. Do not use PTFE thread-seal tape.

8. Insert the gas pipe through the grommet in the casing. Apply a thin layer of pipe dope to the threads of the pipe and thread the pipe into the gas valve.

**NOTE:** Use a back-up wrench on the gas valve to prevent the valve from rotating on the manifold or damaging the mounting to the burner box.

9. With a back-up wrench on the inlet boss of the gas valve, finish tightening the gas pipe to the gas valve.
10. Check for leaks after the gas pipe is installed.

**NOTE**: If you are converting furnace for use with propane, attach kit labels and extra parts bag as described in Procedure 3 then proceed to Section II.

## SECTION II: CONVERSION FROM NATURAL GAS TO PROPANE

### BURNER REMOVAL

1. Slide one-piece burner assembly out of slots on sides of burner box.
2. Remove the flame sensor from the burner assembly.
3. Remove the natural gas orifices from the manifold and discard.

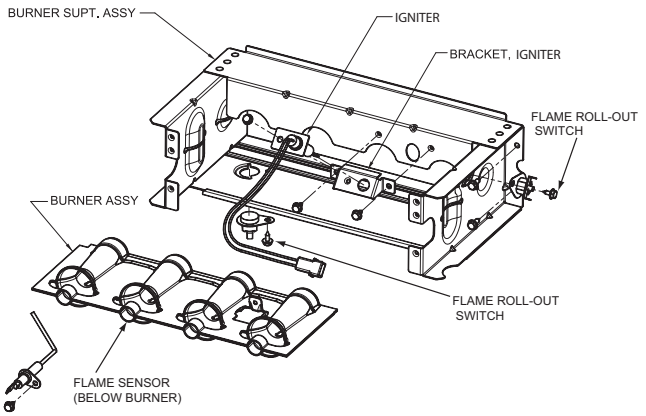


**Fig. 5 - Burner Assembly**

### ORIFICE SELECTION/DERATE

**⚠ WARNING**

**FIRE AND FURNACE DAMAGE HAZARD**

Failure to follow this warning could result in personal injury, death, property damage and/or unit damage.

DO NOT redrill orifices. Improper drilling (burrs, out-of-round holes, etc.) can cause excessive burner noise and misdirection of burner flames. This can result in flame impingement of burners and heat exchangers causing failures.

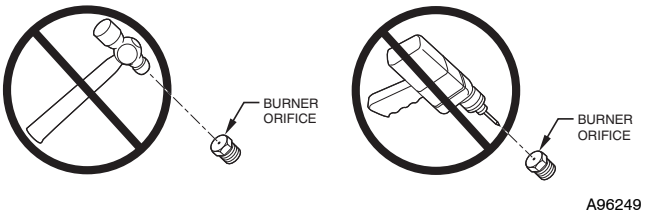


**Fig. 6 - Burner Orifice**

Refer to conversion kit rating plate (340306-101) to determine main burner orifice size. (See Fig. 22)

Furnace gas input rate on furnace rating plate is for installations at altitudes up to 2000 ft. (610 M).

**In the U.S.A.**, the input rating for altitudes above 2000 ft. (610 M) must be reduced by 2 percent for each 1000 ft. (305 M) above sea level.

**In Canada**, the input rating must be derated by 5 percent for altitudes of 2000 ft. to 4500 ft. (610 M to 1372 M) above sea level.

The Conversion Kit Rating Plate accounts for high altitude derate.

### INSTALL ORIFICES

1. Install main burner orifices. Do not use PTFE thread-seal tape. Finger-tighten orifices at least one full turn to prevent cross-threading, then tighten with wrench. (See Fig. 4)
2. There are enough orifices in each kit for largest furnace. Discard extra orifices.

**NOTE:** DO NOT reinstall the manifold at this time.

## INSTALL MIXER SCREWS

**NOTE:** There is a set of mixer screws. Use the parts in the bag marked **"REQUIRED FOR THE CONVERSION OF CONDENSING GAS FURNACES TO PROPANE GAS"**

1. See Fig. 7 to verify you have the correct set of mixer screws.
2. Locate the dimple on each burner venturi tube.
3. If you cannot locate the dimple, refer to Fig. 8 for location of the mixer screw.
4. Drill a 7/64-in (2.8 mm) hole in each dimple using a supplied drill bill.
5. Install a mixer screw in each drilled hole drilling as straight as possible (i.e. in the center of the gas flow stream as well as perpendicular to the gas flow stream).
6. The screw head should be flush with the top of the burner venturi.

**337932-701**

| PART # | CONTAINS: DESCRIPTION | QTY |
|---|---|---|
| 328456-402 | BIT, DRILL | 1 |
| FAJ5812B | SCREW | 7 |

REQUIRED FOR CONVERSION OF CONDENSING GAS FURNACE TO PROPANE GAS.

A11294

**Fig. 7 - Gas Conversion Kit**

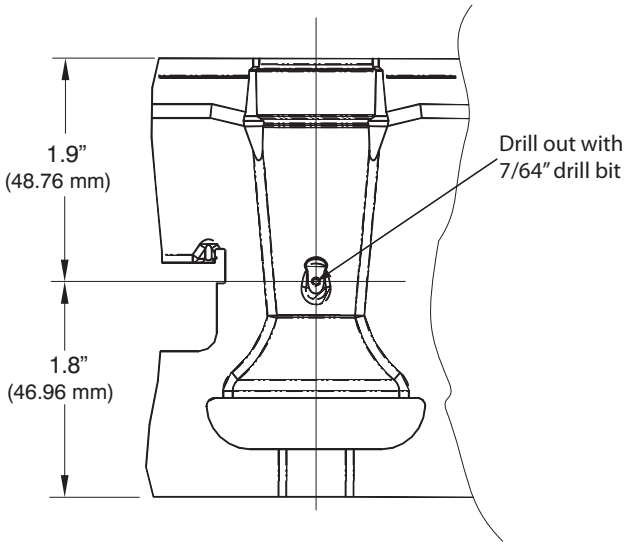


A11460

**Fig. 8 - Mixer Screw Location**

## REINSTALL BURNER ASSEMBLY

To reinstall burner assembly:

1. Attach flame sensor to burner assembly.
2. Insert one-piece burner in slot on sides of burner box and slide burner back in place.
3. Verify igniter to burner alignment. See Fig. 9 and 10.

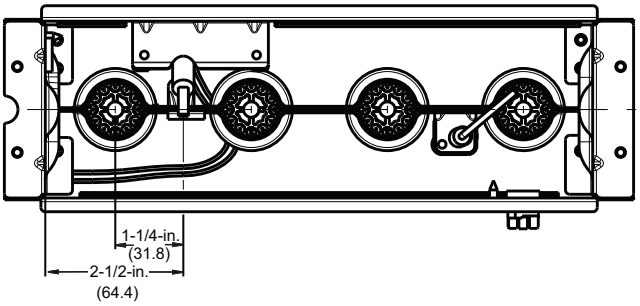


A11405

**Fig. 9 - Igniter Position - Back View**

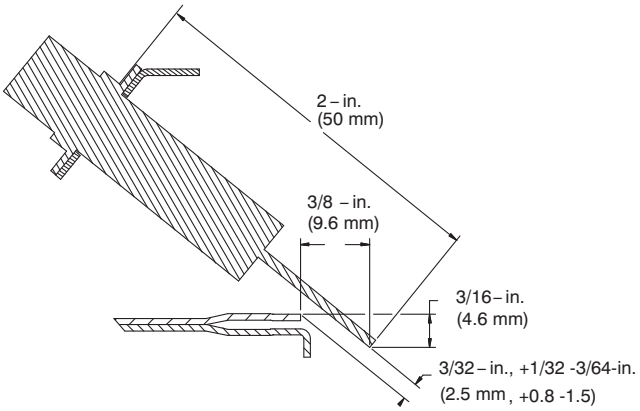


A12392

**Fig. 10 - Igniter Position - Side View**

## CONVERT GAS VALVE

**⚠ WARNING**

**FIRE, EXPLOSION, ELECTRICAL SHOCK HAZARD**

Failure to follow this warning could result in personal injury, death or property damage.

Gas supply and electrical power MUST be shut off to the furnace before proceeding with conversion.

**⚠ WARNING**

**ELECTRICAL SHOCK, FIRE OR EXPLOSION HAZARD**

Failure to follow this warning could result in personal injury, death or property damage.

Before installing, modifying, or servicing system, main electrical disconnect switch must be in the OFF position and install a lockout tag. There may be more than one disconnect switch. Lock out and tag switch with a suitable warning label. Verify proper operation after servicing.

1. Refer to Fig. 11.
2. Be sure gas and electrical supplies to furnace are OFF.
3. Orient gas valve LP/NAT cap for propane gas. The LP arrow should point toward gas valve.

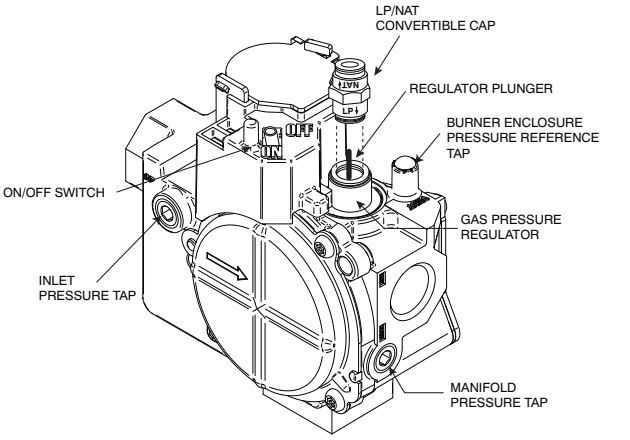


**Fig. 11 - Convertible Gas Valve**

## INSTALL LOW GAS PRESSURE SWITCH

**NOTE:** Install the Low Gas Pressure Switch before installing the manifold on the burner assembly.

There are two ways to mount the Low Gas Pressure Switch.

**All 14 3/16-in Casings or Vent Passed Between Inducer Assembly and Burner Assembly**

If the vent pipe passes between the inducer and burner assembly, or the furnace is a 14-3/16-in. wide casing, install the switch as follows: (See Fig. 12)

1. Remove the 1/8-in. (3 mm) NPT pipe plug from the gas valve inlet pressure tap.

**NOTE:** Use pipe dope approved for use with Propane Gas.

**NOTE:** Tighten all fittings and the Low Gas Pressure Switch with a small wrench. Do not over-tighten, check for gas leaks after gas supply has been turned on.

**⚠ WARNING**

**FIRE AND EXPLOSION HAZARD**

Failure to follow this warning could result in personal injury and/or death.

NEVER test for gas leaks with an open flame. Use a commercially available soap solution made specifically for the detection of leaks to check all connections. A fire or explosion may result causing property damage, personal injury or loss of life.

**⚠ AVERTISSEMENT**

**RISQUE D'EXPLOSION ET D'INCENDIE**

Le fait de ne pas suivre cet avertissement pourrait entraîner des dommages corporels et / ou la mort.

Ne jamais examiner pour les fuites de gaz avec une flamme vive. Utilisez plutôt un savon fait specifiquement pour la détection des fuites de gaz pour verifier tous les connections. Un incendie ou une explosion peut entrainer des dommages matériels, des blessures ou la mort.

2. Apply pipe dope sparingly to the male threads of the 1/8-in. (3 mm) black iron street elbow. Install the street elbow into the gas valve inlet pressure tap. Point the open end of the street elbow toward you.
3. Apply pipe dope sparingly to the male threads of the 1/8-in. (3 mm) brass street tee. Install the male end of the street tee as shown in Fig. 12. One opening on the street tee should face you. The other opening should be parallel with the inlet of the gas valve.
4. Apply pipe dope sparingly to the male threads of the 1/8-in. (3 mm) brass hex nipple. Install the hex nipple into the open end of the brass street tee. See Fig. 12. The hex nipple should be parallel with the boss on the gas valve.
5. Install the open end of the brass street elbow on the end of the hex nipple. Tighten the street elbow so the male threads of the elbow point away from you.
6. Apply pipe dope sparingly to the male threads of the 1/8-in. (3 mm) brass street elbow. Install the Low Gas Pressure Switch on the male threads of the street elbow. Tighten switch at hex fitting at base of switch. Do not use switch body to tighten switch. Do not over-tighten switch.
7. The remaining opening on the brass street tee is the new gas valve inlet pressure tap. Apply pipe dope to inlet pressure plug from gas valve and install in open end of brass street tee.
8. Check all fittings for leaks after gas supply has been turned on.

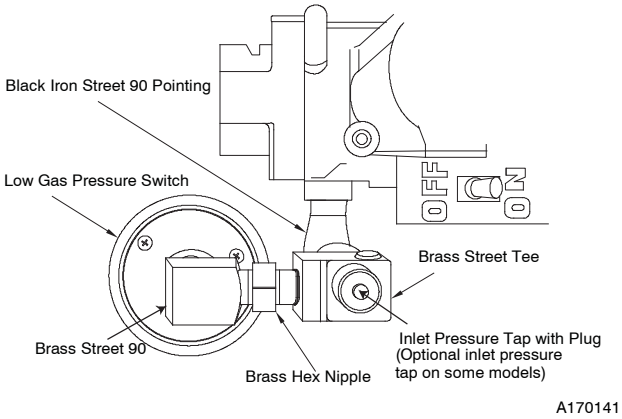


**Fig. 12 - Low Gas Pressure Switch - All Widths (Must be used on the 14-3/16")**

**LGPS for Casing Wider than 14-3/16" and Vent does not Pass between Inducer and Burner Assembly**

If the vent pipe does not pass between the inducer and burner assembly, or the furnace is wider than a 14-3/16-in. wide casing, install the switch as follows: (See Fig. 13)

1. Remove the 1/8-in. (3 mm) NPT pipe plug from the gas valve inlet pressure tap.

**NOTE:** Use pipe dope approved for use with Propane Gas.

**NOTE**: Tighten all fittings and the Low Gas Pressure Switch with a small wrench. Do not over-tighten, check for gas leaks after gas supply has been turned on.

2. Apply pipe dope sparingly to the male threads of the 1/8-in. (3 mm) brass street elbow. Install the street elbow into the gas valve inlet pressure tap. One end of the opening of the street elbow should be parallel with the inlet boss on the gas valve. The other opening should be pointing toward you..
3. Apply pipe dope sparingly to the male threads of the 1/8-in. (3 mm) long brass nipple. Install the nipple into the open end of the brass street elbow.
4. Install the open end of the brass street elbow on the end of the brass nipple. Tighten the street elbow so the male threads of the elbow point away from you.
5. Apply pipe dope sparingly to the male threads of the 1/8-in. (3 mm) brass street elbow. Install the Low Gas Pressure

Switch on the male threads of the street elbow finger tight. Tighten switch at hex fitting at base of switch. Do not use switch body to tighten switch. Do not over-tighten switch.

6. The remaining opening on the brass street tee is the new gas valve inlet pressure tap. Apply pipe dope to inlet pressure plug from gas valve and install in open end of brass street tee.
7. Check all fittings for leaks after gas supply has been turned on.

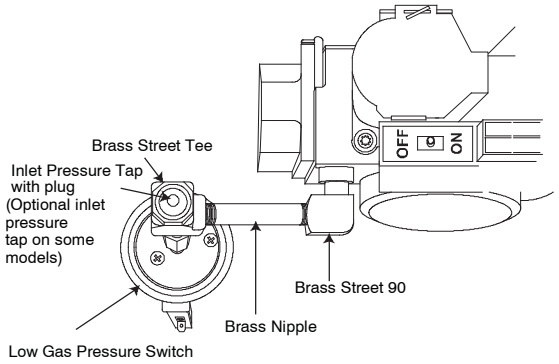


**Fig. 13 - LGPS for casing wider than 14-3/16" and vent does not pass between inducer and burner assembly**

## INSTALL LOW GAS PRESSURE SWITCH WIRES

1. Locate the orange wire in the kit with an insulated straight female spade terminal and an insulated straight male terminal on the other end.
2. Connect the female terminal to a terminal on the Low Gas Pressure Switch.
3. Locate the orange wire in kit with an insulated straight female spade terminal and an insulated female flag terminal on the other end.
4. Connect both straight female terminals of the orange wires to the terminals on the Low Gas Pressure Switch.

## INSTALL MANIFOLD

1. Refer to Fig. 4 and 5.
2. Align the orifices in the manifold assembly with the support rings on the end of the burner.
3. Insert the orifices in the support rings of the burners. Manifold mounting tabs should fit flush against the burner box.

**NOTE:** If manifold does not fit flush against the burner box, the burners are not fully seated forward. Remove the manifold and check burner positioning in the burner box assembly.

4. Attach the green/yellow wire and ground terminal to one of the manifold mounting screws. See Fig. 4.
5. Install the remaining manifold mounting screws.
6. Connect the wires to the flame sensor and hot surface igniter.
7. Connect the wires to gas valve.

**NOTE:** Use only propane-resistant pipe dope. Do not use PTFE thread-seal tape.

8. Insert the gas pipe through the grommet in the casing. Apply a thin layer of pipe dope to the threads of the pipe and thread the pipe into the gas valve.

**NOTE:** Use a back-up wrench on the gas valve to prevent the valve from rotating on the manifold or damaging the mounting to the burner box.

9. With a back-up wrench on the inlet boss of the gas valve, finish tightening the gas pipe to the gas valve.

## MODIFY PRESSURE SWITCH WIRING

**⚠ CAUTION**

**UNIT OPERATION HAZARD**

Failure to follow this caution may result in unit damage or improper operation.

Label all wires prior to disconnection when servicing controls.

**⚠ PRUDENCE**

**D'EQUIPEMENT D'OPERATION**

Toute erreur de câblage peut être une source de danger et de panne.
Lors des opérations d'entretien des commandes, étiqueter tous les fils avant de les déconnecter.

1. Disconnect orange wire from Low Heat Pressure Switch LPS on inducer housing.
2. Connect the orange wire from the Low Heat Pressure Switch to the orange wire with the insulated male spade terminal. (See Fig. 14)
3. Connect the orange wire from the Low Gas Pressure Switch to the terminal on the Low Heat Pressure Switch.
4. Route orange wires along wire harness. If possible, secure with wire tie provided in kit.

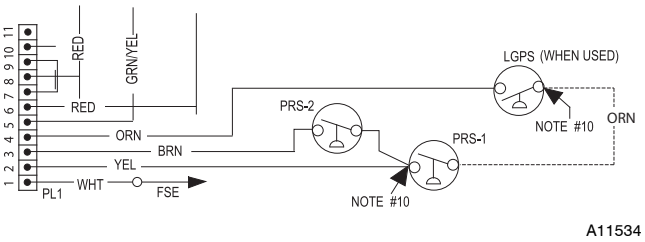


**Fig. 14 - Pressure Switch Wiring**

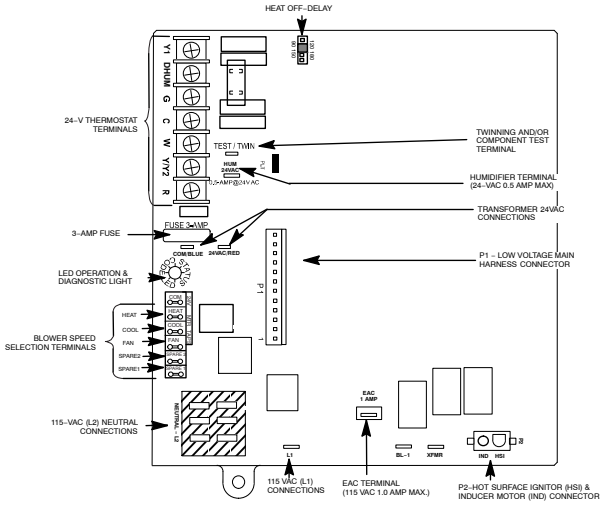


REPRESENTATIVE DRAWING ONLY,
SOME MODELS MAY VARY IN APPEARANCE.

**Fig. 15 - Single-Stage Furnace Control**

## CHECK INLET GAS PRESSURE

**⚠ CAUTION**

**UNIT DAMAGE HAZARD**

Failure to follow this caution may result in unit damage.

DO NOT operate furnace more than one minute to check inlet gas pressure, as conversion is not complete at this time.

**NOTE:** This kit is to be used only when inlet gas pressure is between 11.0-in. W.C. and 13.6-in. W.C.

**NOTE**: Verify LP arrow on LP/NAT cap is pointed toward gas valve.

1. On some models, remove 1/8-in. (3 mm) pipe plug from inlet pressure tap on brass street tee and insert pressure tap. Or, on some models, loosen set screw on inlet tower pressure tap no more than one full turn with the 3/32-in. hex wrench.
2. Verify manometer is connected to inlet pressure tap on gas valve. (See Fig. 16)
3. Turn on furnace power supply.
4. Turn gas supply manual shutoff valve to ON position.

**⚠ WARNING**

**FIRE, EXPLOSION, ELECTRICAL SHOCK HAZARD**

Failure to follow this warning could result in personal injury, death or property damage.

Gas supply MUST be shut off before disconnecting electrical power before proceeding with conversion.

**⚠ WARNING**

**ELECTRICAL SHOCK, FIRE OR EXPLOSION HAZARD**

Failure to follow this warning could result in personal injury, death or property damage.

Before installing, modifying, or servicing system, main electrical disconnect switch must be in the OFF position and install a lockout tag. There may be more than one disconnect switch. Lock out and tag switch with a suitable warning label. Verify proper operation after servicing.

5. Turn furnace gas valve switch to ON position.
6. Jumper R-W thermostat connections on control. (See Fig. 15)
7. When main burners ignite, confirm inlet gas pressure is between 11.0-in. W.C. and 13.6-in. W.C.
8. Remove jumper across R-W thermostat connections to terminate call for heat.
9. Turn furnace gas valve switch to OFF position.
10. Turn off furnace power supply.
11. Remove manometer and on some models remove pressure tap fitting.

**⚠ WARNING**

**FIRE HAZARD**

Failure to follow this warning could result in personal injury.

Inlet pressure tap set screw must be tightened and 1/8-in. NPT pipe plug must be installed to prevent gas leaks.

12. On some models, apply pipe dope sparingly to end of inlet gas pipe plug and install into unused end of 1/8-in. (3 mm) tee. Use a small back-up wrench on tee when tightening gas inlet pipe plug. Or, on some models, tighten set screw on inlet tower pressure tap with a 3/32-in. hex wrench. (See Fig. 11)

## CHECK FURNACE AND MAKE ADJUSTMENTS

1. Be sure main gas and electric supplies to furnace are off.
2. On some models, remove 1/8-in. (3 mm) pipe plug from manifold pressure tap on the outlet end of gas valve and insert pressure tap. Or, on some models, loosen set screw on manifold tower pressure tap no more than one full turn with a 3/32-in. hex wrench.
3. Attach manometer to manifold pressure tap on gas valve. (See Fig. 16)
4. Turn gas supply manual shutoff valve to ON position.
5. Turn furnace gas valve switch to ON position.

**⚠ WARNING**

**FIRE AND EXPLOSION HAZARD**

Failure to follow this warning could result in personal injury and/or death.

NEVER test for gas leaks with an open flame. Use a commercially available soap solution made specifically for the detection of leaks to check all connections. A fire or explosion may result causing property damage, personal injury or loss of life.

**⚠ AVERTISSEMENT**

**RISQUE D'EXPLOSION ET D'INCENDIE**

Le fait de ne pas suivre cet avertissement pourrait entraîner des dommages corporels et / ou la mort.

Ne jamais examiner pour les fuites de gaz avec une flamme vive. Utilisez plutôt un savon fait specifiquement pour la détection des fuites de gaz pour verifier tous les connections. Un incendie ou une explosion peut entrainer des dommages matériels, des blessures ou la mort.

6. Check all threaded pipe connections for gas leaks.
7. Turn on furnace power supply.

## GAS INPUT RATE INFORMATION

The gas input rate for propane is the same as for natural gas. See furnace rating plate for input rate. (See Fig. 22) The input rate for propane is determined by manifold pressure and orifice size.

The gas valve must be set for Low Heat first and then set for High Heat on 2-stage and variable-speed furnaces. Furnace gas input rate on rating plate is for installations at altitudes up to 2000 ft. (610 M).

**In the U.S.A.**; the input rating for altitudes above 2000 ft. (610M) must be reduced by 2 percent for each 1000 ft. (305 M) above sea level.

**In Canada**; the input rating must be derated by 5 percent for altitudes of 2000 ft. (610 M) to 4500 ft. (1372 M) above sea level.

The Conversion Kit Rating Plate accounts for high altitude derate.

## SET GAS INPUT RATE

1. Jumper R and W thermostat connections to call for heat. (See Fig. 15)
2. Check manifold orifices for gas leaks when main burners ignite.
3. Adjust manifold pressure to obtain input rate. (See Fig. 22)
4. When main burners have ignited, confirm proper manifold pressure is between 9.5-in. W.C. and 11.0-in. W.C. (See Fig. 22)
5. If manifold pressure needs to be adjusted, use gas valve adjusting key, factory-supplied in this kit or adhesive pouch. (See Fig. 16)
6. Remove cap that conceals adjustment screw for gas valve regulator. (See Fig. 16)
7. Turn adjusting screw using supplied ADJUSTING KEY either counterclockwise (out) to decrease input rate or clockwise (in) to increase rate. (See Fig. 16)
8. Replace cap and check rate. Cap MUST be in place to actuate regulator.
9. Repeat Steps 5 through 8 until correct input rate is obtained.

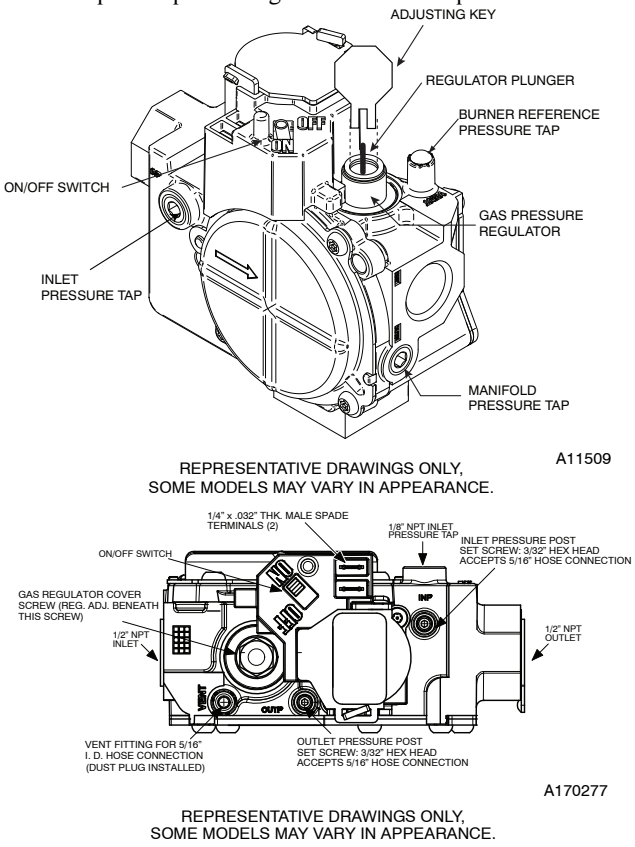


**Fig. 16 - Manifold Pressure Adjusting Key**

**NOTE:** Gas valve LP/NAT cap MUST be in place with LP arrow pointing toward gas valve when checking input rate. When correct input is obtained, main burner flame should be clear blue, almost transparent (See Fig. 17). Be sure cap is in place when finished.

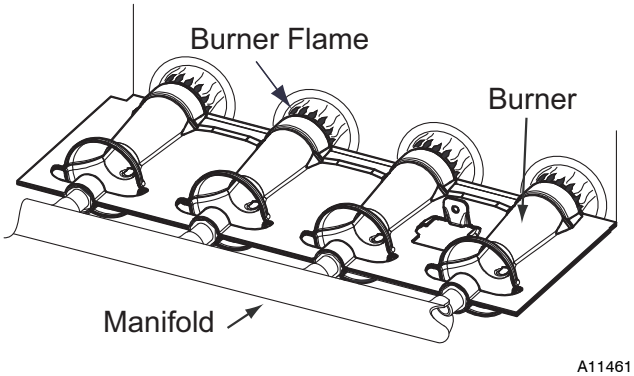


**Fig. 17 - Burner Flame**

When correct input is obtained, make sure cap that conceals gas valve regulator adjustment screw is oriented properly for propane (LP) gas. The LP arrow should be pointing toward gas valve. (See Fig. 16)

10. Remove jumper across R and W thermostat connections to terminate call for heat.
11. Turn furnace gas valve control knob or switch to OFF position.
12. Turn gas supply manual shutoff valve to OFF position.
13. Turn off furnace power supply.
14. Remove manometer and on some models replace manifold pressure tab plug. (See Fig. 16)

**⚠ WARNING**

**FIRE HAZARD**

Failure to follow this warning could result in personal injury, death, and/or property damage.

Manifold pressure tap set screw must be tightened and 1/8-in. NPT pipe plug must be installed to prevent gas leaks.

15. On some models, apply pipe dope sparingly to end of 1/8-in. (3 mm) pipe plug and install in the manifold pressure tap opening. Or, on some models, tighten set screw on manifold tower pressure tap with a 3/32-in. hex wrench. (See Fig. 16)
16. Turn furnace gas valve switch to ON position.
17. Turn on furnace power supply.
18. Set room thermostat to call for heat.

**⚠ WARNING**

**FIRE AND EXPLOSION HAZARD**

Failure to follow this warning could result in personal injury and/or death.

NEVER test for gas leaks with an open flame. Use a commercially available soap solution made specifically for the detection of leaks to check all connections. A fire or explosion may result causing property damage, personal injury or loss of life.

## ⚠ AVERTISSEMENT

**RISQUE D'EXPLOSION ET D'INCENDIE**

Le fait de ne pas suivre cet avertissement pourrait entraîner des dommages corporels et / ou la mort.

Ne jamais examiner pour les fuites de gaz avec une flamme vive. Utilisez plutôt un savon fait specifiquement pour la détection des fuites de gaz pour verifier tous les connections. Un incendie ou une explosion peut entrainer des dommages matériels, des blessures ou la mort.

19. Check pressure tap plug for gas leaks when main burners ignite.
20. Check for correct burner flame.
21. Observe unit operation through two complete heating cycles.
22. See Sequence of Operation in furnace Installation, Start-Up, and Operating Instructions.
23. Set room thermostat to desired temperature.
24. After making the required manifold pressure adjustments, check and adjust the furnace temperature rise per the furnace installation instructions.

## CHECK LOW GAS PRESSURE SWITCH

The newly installed low gas pressure switch is a safety device used to guard against adverse burner operating characteristics that can result from low gas supply pressure. Switch opens at not less than 6.5 in. W.C. and closes at not greater than 10.2 in. W.C.

This switch also prevents operation when the propane tank level is low which can result in gas with a high concentration of impurities, additives, and residues that have settled to the bottom of the tank. Operation under these conditions can cause harm to the heat exchanger system. This normally open switch closes when gas is supplied to gas valve under normal operating pressure.

The closed switch completes control circuit. Should an interruption or reduction in gas supply occur, the gas pressure at switch drops below low gas pressure switch setting, and switch opens. Any interruption in control circuit (in which low gas pressure switch is wired) quickly closes gas valve and stops gas flow to burners. When normal gas pressure is restored, the system must be electrically reset to re-establish normal heating operation.

Before leaving installation, observe unit operation through two complete heating cycles. During this time, turn gas supply to gas valve off just long enough to completely extinguish burner flame, then instantly restore full gas supply. To ensure proper low gas pressure switch operation, observe that there is no gas supply to burners until after hot surface igniter begins glowing.

## LABEL APPLICATION

1. Fill in Conversion Responsibility Label (340323-101) previously applied to inside of main furnace door by installer. Date, name, and address of organization making this conversion are required. Specify that unit is now converted for use with natural gas.
2. Place ALL unused parts, adjusting key, and these Installation Instructions in adhesive pouch attached to outside of main furnace door or accessible side of furnace.
3. Reinstall main furnace door.

## CHECKOUT

1. Observe unit operation through two complete heating cycles.
2. See Sequence of Operation in furnace Installation, Start-Up, and Operating Instructions.
3. Set room thermostat to desired temperature.

# SECTION III: CONVERSION FROM PROPANE TO NATURAL GAS INSTALLATION

1. Set room thermostat to lowest setting or "OFF".
2. Disconnect power at external disconnect, fuse or circuit breaker.
3. Turn off gas at external shut-off or gas meter.
4. Remove outer doors and set aside.
5. Turn electric switch on gas valve to OFF.

## MANIFOLD/ORIFICE/BURNER REMOVAL

## ⚠ CAUTION

**UNIT OPERATION HAZARD**

Failure to follow this caution may result in unit damage or improper operation.

Label all wires prior to disconnection when servicing controls.

## ⚠ PRUDENCE

**D'EQUIPEMENT D'OPERATION**

Toute erreur de câblage peut être une source de danger et de panne.

Lors des opérations d'entretien des commandes, étiqueter tous les fils avant de les déconnecter.

**NOTE:** Use a back-up wrench on the gas valve to prevent the valve from rotating on the manifold or damaging the mounting to the burner box.

1. Disconnect the gas pipe from gas valve and remove pipe from the furnace casing.
2. Disconnect the connector harness from gas valve.
3. Disconnect wires from Hot Surface Igniter (HSI) and Flame Sensor. See Fig. 5.
4. Remove the orange wires connected to the Low Gas Pressure Switch.
5. Support the manifold and remove the 4 screws that secure the manifold assembly to the burner box and set aside. See Fig. 4.
6. Note the location of the green/yellow wire ground wire for re-assembly later.
7. Slide one-piece burner assembly out of slots on sides of burner box.
8. Remove the flame sensor from the burner assembly.
9. Remove the orifices from the manifold and discard.

## ORIFICE SELECTION/DERATE

## GAS INPUT RATE INFORMATION

The gas input rate for natural is the same as for propane gas. See furnace rating plate for input rate. (See Fig. 22) The input rate for propane is determined by manifold pressure and orifice size.

Furnace gas input rate on rating plate is for installations at altitudes up to 2000 ft. (610 M).

**In the U.S.A.,** the input rating for altitudes above 2000 ft. (610M) must be reduced by 2 percent for each 1000 ft. (305 M) above sea level.

**In Canada**, the input rating must be derated by 5 percent for altitudes of 2000 ft. (610 M) to 4500 ft. (1372 M) above sea level.

Furnace input rate must be within +/- 2 percent of input on furnace rating plate adjusted for altitude.

1. Determine natural gas orifice size and manifold pressure for correct input.
   a. Obtain average yearly heat value (at installed altitude) from local gas supplier.
   b. Obtain average yearly specific gravity from local gas supplier.
   c. Find installation altitude in Table 3.

**NOTE**: For Canada altitudes of 2000 to 4500 ft., (610 to 1372 M) use USA. altitudes of 2001 to 3000 ft. (610 to 914 M) in Table 3.

   d. Find closest natural gas heat value and specific gravity on Table 3.
   e. Follow heat value and specific gravity lines to point of intersection to find orifice size and manifold pressure settings for proper operation.
2. Check and verify burner orifice size in furnace. NEVER ASSUME ORIFICE SIZE; ALWAYS CHECK AND VERIFY.

**NOTE**: If orifice hole appears damaged or it is suspected to have been redrilled, check orifice hole with a numbered drill bit of correct size. Never redrill an orifice. A burr-free and squarely aligned orifice hole is essential for proper flame characteristics.

**EXAMPLE**: 0 - 2000 ft. (0 - 609.6M) altitude
Heating value = 1050 Btu/cu ft.
Specific gravity = 0.62
Therefore: Orifice No. 44
Manifold pressure: 3.4-in. W.C.
* Furnace is shipped with No. 44 orifices. In this example, all main burner orifices are the correct size and do not need to be changed to obtain proper input rate.

## INSTALL ORIFICES

1. Locate natural gas orifices in loose parts bag attached to furnace casing. Verify orifices selected are correct orifices for natural gas.
2. Install main burner orifices. Do not use PTFE thread-seal tape. Finger-tighten orifices at least one full turn to prevent cross-threading, then tighten with wrench. See Fig. 4.
3. There are enough orifices in each kit for largest furnace. Discard extra orifices.

**NOTE:** DO NOT reinstall the manifold at this time.

## REMOVE MIXER SCREWS

1. Locate the mixer screw on each burner venturi tube.
2. Remove each screw and discard.
3. It is not necessary to plug or seal the screw hole in the burner venturi.

## REINSTALL BURNER ASSEMBLY

To reinstall burner assembly:

1. Attach flame sensor to burner assembly.
2. Insert one-piece burner in slot on sides of burner box and slide burner back in place.
3. Reattach HSI wires to HSI.
4. Verify igniter to burner alignment. See Fig. 9 and 10.

## CONVERT GAS VALVE

**⚠ WARNING**

**FIRE, EXPLOSION, ELECTRICAL SHOCK HAZARD**

Failure to follow this warning could result in personal injury, death or property damage.

Gas supply MUST be shut off before disconnecting electrical power before proceeding with conversion.

**⚠ WARNING**

**ELECTRICAL SHOCK, FIRE OR EXPLOSION HAZARD**

Failure to follow this warning could result in personal injury, death or property damage.

Before installing, modifying, or servicing system, main electrical disconnect switch must be in the OFF position and install a lockout tag. There may be more than one disconnect switch. Lock out and tag switch with a suitable warning label. Verify proper operation after servicing.

1. Refer to Fig. 18.
2. Be sure gas and electrical supplies to furnace are off.
3. Orient gas valve LP/NAT cap for natural gas. The NAT arrow should point toward gas valve.

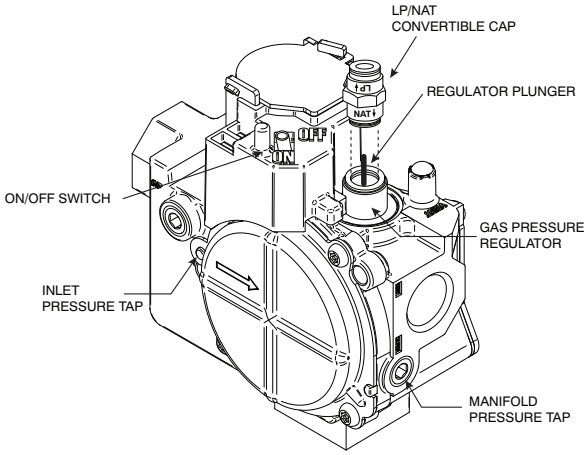


**Fig. 18 - Convertible Gas Valve**

## REMOVE LOW GAS PRESSURE SWITCH

**⚠ CAUTION**

**UNIT OPERATION HAZARD**

Failure to follow this caution may result in unit damage or improper operation.

Label all wires prior to disconnection when servicing controls.

## ⚠ PRUDENCE

**D'EQUIPEMENT D'OPERATION**

Toute erreur de câblage peut être une source de danger et de panne.

Lors des opérations d'entretien des commandes, étiqueter tous les fils avant de les déconnecter.

1. Remove the orange wire from the terminal on the Low Pressure Switch. (See Fig. 19)
2. Connect the orange wire from the wiring harness to the terminal on the Low Pressure Switch.
3. Discard loose orange wire.
4. Remove the 1/8-in. (3 mm) NPT pipe plug from the tee fitting on the Low Gas Pressure Switch.
5. Remove the Low Gas Pressure Switch from fittings on gas valve and discard.
6. Remove remaining fittings from gas valve and discard.
7. Install 1/8-in. (3 mm) NPT plug in unused inlet pressure tap opening in the gas valve. (See Fig. 20)

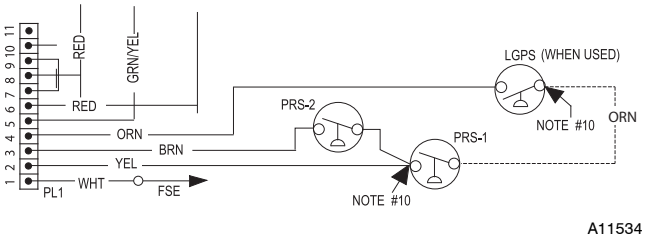


**Fig. 19 - Pressure Switch Wiring**

## ⚠ WARNING

**FIRE AND EXPLOSION HAZARD**

Failure to follow this warning could result in personal injury and/or death.

NEVER test for gas leaks with an open flame. Use a commercially available soap solution made specifically for the detection of leaks to check all connections. A fire or explosion may result causing property damage, personal injury or loss of life.

## ⚠ AVERTISSEMENT

**RISQUE D'EXPLOSION ET D'INCENDIE**

Le fait de ne pas suivre cet avertissement pourrait entraîner des dommages corporels et / ou la mort.

Ne jamais examiner pour les fuites de gaz avec une flamme vive. Utilisez plutôt un savon fait specifiquement pour la détection des fuites de gaz pour verifier tous les connections. Un incendie ou une explosion peut entrainer des dommages matériels, des blessures ou la mort.

8. Check all fittings for leaks after gas supply has been turned on.

## INSTALL MANIFOLD

1. Refer to Fig. 4 and 5.
2. Align the orifices in the manifold assembly with the support rings on the end of the burner.
3. Insert the orifices in the support rings of the burners. Manifold mounting tabs should fit flush against the burner box.

**NOTE:** If manifold does not fit flush against the burner box, the burners are not fully seated forward. Remove the manifold and check burner positioning in the burner box assembly.

4. Attach the green/yellow wire and ground terminal to one of the manifold mounting screws. (See Fig. 4)
5. Install the remaining manifold mounting screws.
6. Connect the wires to both rollout switches.
7. Connect the wires to the flame sensor and hot surface igniter.
8. Connect the connector harness to gas valve.

**NOTE:** Use only propane-resistant pipe dope. Do not use PTFE thread-seal tape.

9. Insert the gas pipe through the grommet in the casing. Apply a thin layer of pipe dope to the threads of the pipe and thread the pipe into the gas valve.

**NOTE:** Use a back-up wrench on the gas valve to prevent the valve from rotating on the manifold or damaging the mounting to the burner box.

10. With a back-up wrench on the inlet boss of the gas valve, finish tightening the gas pipe to the gas valve.

## CHECK INLET GAS PRESSURE

**NOTE**: This kit is to be used only when inlet gas pressure is between 4.5-in. W.C. and 13.6-in. W.C.. Natural gas service pressure must not exceed 0.5 psig (14-in. W.C.) but be no less than 0.16 psig (4.5-in. W.C.).

**NOTE**: Verify NAT arrow on LP/NAT cap is pointed toward gas valve.

1. On some models, remove 1/8-in. (3 mm) pipe plug from pressure tap on inlet end of the gas valve and insert pressure tap. Or, on some models, loosen set screw on inlet tower pressure tap no more than one full turn with the 3/32-in. hex wrench.
2. Verify manometer is connected to inlet pressure tap on gas valve. (See Fig. 18)
3. Turn on furnace power supply.
4. Turn gas supply manual shutoff valve to ON position.
5. Turn furnace gas valve switch to ON position.
6. Jumper R-W thermostat connections on control.
7. When main burners ignite, confirm inlet gas pressure is between 4.5-in. W.C. and 13.6-in. W.C.

## ⚠ WARNING

**FIRE, EXPLOSION, ELECTRICAL SHOCK HAZARD**

Failure to follow this warning could result in personal injury, death or property damage.

Gas supply MUST be shut off before disconnecting electrical power before proceeding with conversion.

## ⚠ WARNING

**ELECTRICAL SHOCK, FIRE OR EXPLOSION HAZARD**

Failure to follow this warning could result in personal injury, death or property damage.

Before installing, modifying, or servicing system, main electrical disconnect switch must be in the OFF position and install a lockout tag. There may be more than one disconnect switch. Lock out and tag switch with a suitable warning label. Verify proper operation after servicing.

8. Remove jumper across R-W thermostat connections to terminate call for heat.
9. Turn furnace gas valve switch to OFF position.
10. Turn off furnace power supply.
11. Remove manometer and on some models remove pressure tap fitting.

## ⚠ WARNING

**FIRE HAZARD**

Failure to follow this warning could result in personal injury, death, and/or property damage.

Inlet pressure tap set screw must be tightened and 1/8-in. NPT pipe plug must be installed to prevent gas leaks.

12. On some models, apply pipe dope sparingly to end of inlet gas pipe plug and install into unused inlet pressure tap opening in the gas valve. Or, on some models, tighten set screw on inlet tower pressure tap with a 3/32-in. hex wrench. (See Fig. 20)

## CHECK FURNACE AND MAKE ADJUSTMENTS

## ⚠ WARNING

**FIRE AND EXPLOSION HAZARD**

Failure to follow this warning could result in personal injury and/or death.

NEVER test for gas leaks with an open flame. Use a commercially available soap solution made specifically for the detection of leaks to check all connections. A fire or explosion may result causing property damage, personal injury or loss of life.

## ⚠ AVERTISSEMENT

**RISQUE D'EXPLOSION ET D'INCENDIE**

Le fait de ne pas suivre cet avertissement pourrait entraîner des dommages corporels et / ou la mort.

Ne jamais examiner pour les fuites de gaz avec une flamme vive. Utilisez plutôt un savon fait specifiquement pour la détection des fuites de gaz pour verifier tous les connections. Un incendie ou une explosion peut entrainer des dommages matériels, des blessures ou la mort.

1. Be sure main gas and electric supplies to furnace are off.
2. On some models remove 1/8-in. (3 mm) pipe plug from manifold pressure tap on the outlet end of gas valve and insert pressure tap. Or, on some models, loosen set screw on manifold tower pressure tap no more than one full turn with the 3/32-in. hex wrench.
3. Attach manometer to manifold pressure tap on gas valve. (see Fig. 8)
4. Turn gas supply manual shutoff valve to ON position.
5. Turn furnace gas valve switch to ON position.
6. Check all threaded pipe connections for gas leaks.
7. Turn on furnace power supply.

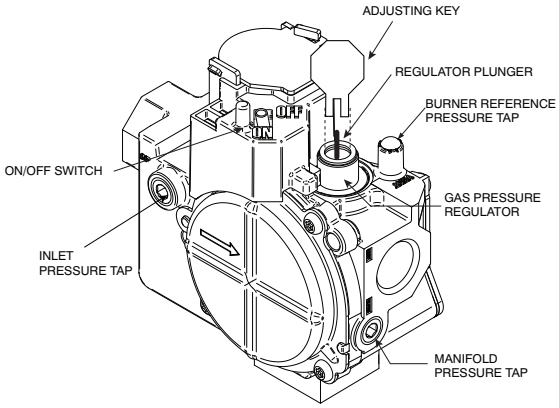


REPRESENTATIVE DRAWINGS ONLY, SOME MODELS MAY VARY IN APPEARANCE. A11509

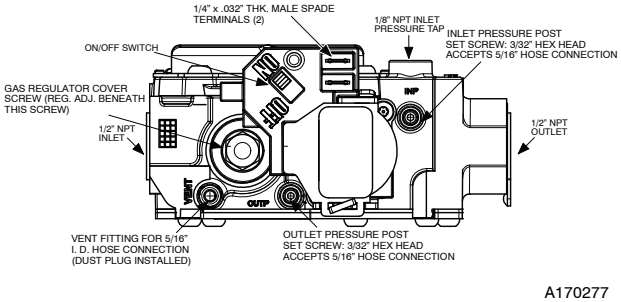


A170277

REPRESENTATIVE DRAWINGS ONLY, SOME MODELS MAY VARY IN APPEARANCE.

**Fig. 20 - Manifold Pressure Adjustment Key**

## SET GAS INPUT RATE

1. Jumper R and W thermostat connections to call for heat. (See Fig. 15)
2. Check manifold orifices for gas leaks when main burners ignite.
3. Adjust manifold pressure to obtain input rate. See Table 3.
4. When main burners have ignited, confirm proper manifold pressure is between 3.2-in. W.C. and 3.8-in. W.C. (See Table 3.
5. If manifold pressure needs to be adjusted, use gas valve adjustment key, factory-supplied in this kit or adhesive pouch. (See Fig. 20)
6. Remove cap that conceals adjustment screw for gas valve regulator. (See Fig. 20)
7. Turn adjusting screw using supplied ADJUSTING KEY either counterclockwise (out) to decrease input rate or clockwise (in) to increase rate. (See Fig. 20)
8. Replace cap and check rate. Cap MUST be in place to actuate regulator.
9. Repeat Steps 5 through 8 until correct input rate is obtained.

**NOTE:** Gas valve LP/NAT cap MUST be in place with NAT arrow pointing toward gas valve when checking input rate. When correct input is obtained, main burner flame should be clear blue, almost transparent (See Fig. 17). Be sure cap is in place when finished.

When correct input is obtained, make sure cap that conceals gas valve regulator adjustment screw is oriented properly for natural

(NAT) gas. The NAT arrow should be pointing toward gas valve. (See Fig. 18)

10. Remove jumper across R and W thermostat connections to terminate call for heat.
11. Turn furnace gas valve control knob or switch to OFF position.
12. Turn gas supply manual shutoff valve to OFF position.
13. Turn off furnace power supply.
14. Remove manometer and on some models remove pressure tap.replace manifold pressure tab plug. (See Fig. 20)

**⚠ WARNING**

**FIRE HAZARD**

Failure to follow this warning could result in personal injury, death, and/or property damage.

Manifold pressure tap set screw must be tightened and 1/8-in. NPT pipe plug must be installed to prevent gas leaks.

15. On some models, apply pipe dope sparingly to end of 1/8-in. (3 mm) pipe plug and install in the manifold pressure tap opening. Or, on some models, tighten set screw on manifold tower pressure tap no more than one full turn with the 3/32-in. hex wrench. (See Fig. 20)
16. Turn furnace gas-valve switch to ON position.
17. Turn on furnace power supply.
18. Set room thermostat to call for heat.
19. Check pressure tap plug for gas leaks when main burners ignite.
20. Check for correct burner flame. (See Fig.17)
21. Observe unit operation through two complete heating cycles.
22. See Sequence of Operation in furnace Installation, Start-Up, and Operating Instructions.
23. Set room thermostat to desired temperature.
24. After making the required manifold pressure adjustments, check and adjust the furnace temperature rise per the furnace installation instructions.
25. Verify Natural Gas Input Rate By Clocking Gas Meter.

**NOTE**: Be sure all pressure tubing, combustion-air and vent pipes, and burner enclosure front are in place when checking input by clocking gas meter.

a. Calculate high-altitude adjustment (if required).

**UNITED STATES**

At altitudes above 2000 ft, this furnace has been approved for a 2 percent derate for each 1000 ft above sea level. See Table 2 for derate multiplier factor.

**CANADA**

At installation altitudes from 2000 to 4500 ft, this furnace must be derated 5 percent by an authorized Gas Conversion Station or Dealer.

To determine correct input rate for altitude, see example above and use 0.95 as derate multiplier factor.

b. Turn off all other gas appliances and pilots.
c. Start furnace and let operate for 3 minutes.
d. Measure time (in sec) for gas meter test dial to complete one revolution.
e. Refer to Table 4 for cu ft of gas per hr.
f. Multiply gas rate (cu ft/hr) X heating value (Btu/cu ft) using natural gas heating value from local gas utility/ supplier.
g. Fill in Conversion Responsibility Label (340323-101) located on inside of main furnace door. Date, name, and address of organization making the conversion is required.
h. Check for gas leaks.

**⚠ WARNING**

**FIRE AND EXPLOSION HAZARD**

Failure to follow this warning could result in personal injury and/or death.

NEVER test for gas leaks with an open flame. Use a commercially available soap solution made specifically for the detection of leaks to check all connections. A fire or explosion may result causing property damage, personal injury or loss of life.

**⚠ AVERTISSEMENT**

**RISQUE D'EXPLOSION ET D'INCENDIE**

Le fait de ne pas suivre cet avertissement pourrait entraîner des dommages corporels et / ou la mort.

Ne jamais examiner pour les fuites de gaz avec une flamme vive. Utilisez plutôt un savon fait specifiquement pour la détection des fuites de gaz pour verifier tous les connections. Un incendie ou une explosion peut entrainer des dommages matériels, des blessures ou la mort.

## Label Modification

**NOTE**: See Fig. 21 for label location.

1. Fill in Conversion Responsibility Label (340323-101) previously applied to inside of main furnace door by installer. Date, name, and address of organization making this conversion are required. Specify that unit is now converted for use with natural gas.
2. Place ALL unused parts, adjusting key, and these Installation Instructions in adhesive pouch attached to outside of main furnace door or accessible side of furnace.
3. Reinstall main furnace door.

**Table 2 – Altitude Derate Multiplier for U.S.A.**

| ALTITUDE | | PERCENT OF DERATE | DERATE MULTIPLIER FACTOR* |
|---|---|---|---|
| FT. | M | | |
| 0–2000 | 0–610 | 0 | 1.00 |
| 2001–3000 | 610–914 | 4–6 | 0.95 |
| 3001–4000 | 914–1219 | 6–8 | 0.93 |
| 4001–5000 | 1219–1524 | 8–10 | 0.91 |
| 5001–6000 | 1524–1829 | 10–12 | 0.89 |
| 6001–7000 | 1829–2134 | 12–14 | 0.87 |
| 7001–8000 | 2134–2438 | 14–16 | 0.85 |
| 8001–9000 | 2438–2743 | 16–18 | 0.83 |
| 9001–10,000 | 2743–3048 | 18–20 | 0.81 |

*Derate multiplier factors are based on midpoint altitude for altitude range.

## Label and Extra Parts Bag Attachment

**NOTE**: See Fig. 21 for label location.

1. Attach Conversion Responsibility Label (340323-101) inside of main furnace door. Date, name, and address of organization making this conversion are required. See Fig. 23.
2. Attach Conversion Rating Plate Label (340306-101) inside of lower left-hand side of controls compartment (downflow) as shown in Fig. 21.
3. Attach Manufactured (Mobile) Home Installation Label (322236-101) inside of main furnace door.
4. Attach adhesive pouch containing gas orifices and Installation Instructions to front of main furnace door or accessible furnace side. (See Fig. 1 or 21)
5. Proceed to Section II or III for gas type modification and input rate adjustment.

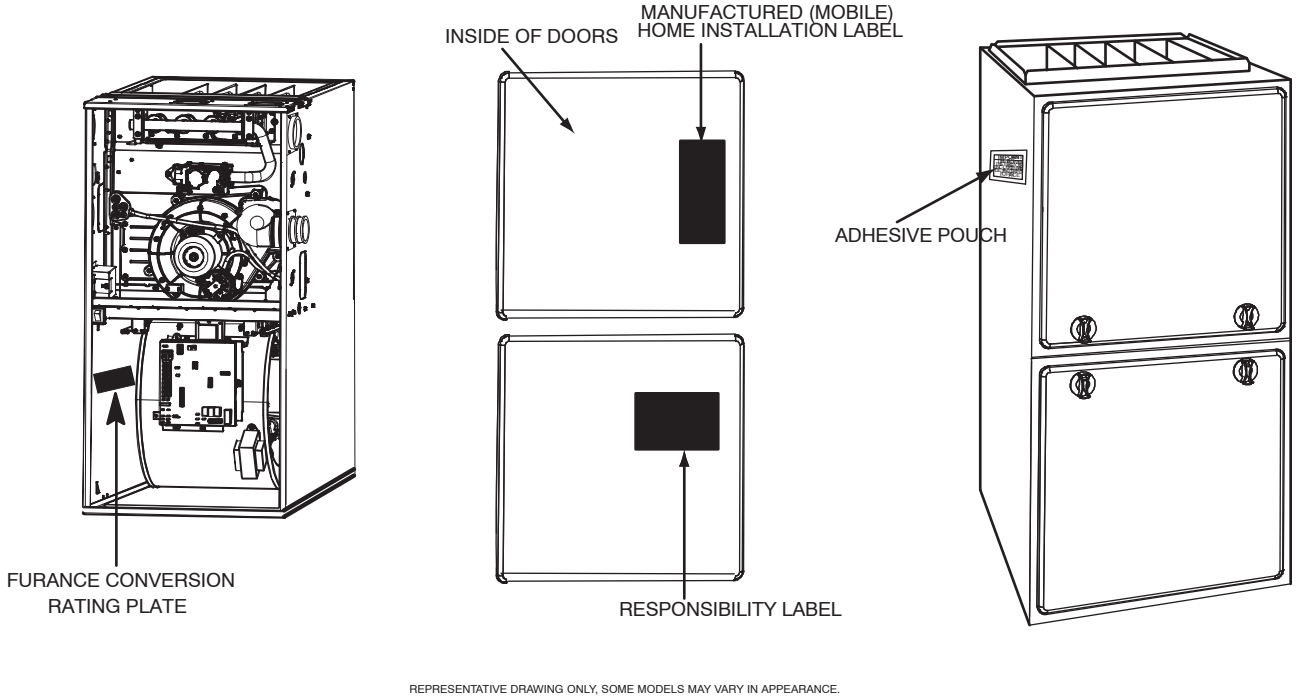


**Fig. 21 – Label Locations (Representative furnace drawing only, some models may vary.)**

**CONVERSION KIT NAHC00101MH RATING PLATE**
**(SUPERSEDES: NAHB00101MH)**

This appliance has been converted for manufactured (Mobile) or Modular home applications. Refer to installation instructions for gas conversion procedures. Use parts supplied by manufacturer and installed by qualified personnel. See main rating plate for appliance model number and input rating.

**NOTE:** Furnace gas input rate on rating plate is for installations up to 2000 ft (610m) above sea level. In U.S.A. the input rating for altitudes above 2000 ft (610m) must be derated by 2% for each 1000 ft (305m) above sea level. In Canada the input rating must be derated by 5% for altitudes of 2000 ft (610m) to 4500 ft (1372m) above sea level.

**FUEL USED: NATURAL GAS** **INLET PRESSURE (min - max): 4.5 - 13.6 in. WC**

Furnace supplied with 44 orifices. Adjust input rate using local natural gas heat content and application altitude to determine proper orifice size. See Installation Instructions.

**APPROVED FOR MODELS / APPROUVÉ POUR LES MODÉLES: *9MXE, *9MSB, *9MSE, *92E, *95E, WFA*, WFS***

**FUEL USED: PROPANE GAS** **INLET PRESSURE (min - max): 12.0 - 13.6 in. WC**
**CARBURANT UTILISÉ: GAZ PROPANE** **PRESSION D'ENTRÉE (min - max): 12.0 - 13.6 PO COLONNE D'EAU**

| | ALTITUDE OF INSTALLATION (FT. ABOVE SEA LEVEL) U.S.A. * | | | | | | | | |
|---|---|---|---|---|---|---|---|---|---|
| | 0 to 2000 | 2001 * to 3000 | 3001 to 4000 | 4001 to 5000 | 5001 to 6000 | 6001 to 7000 | 7001 to 8000 | 8001 to 9000 | 9001 to 10000 |
| Orifice No. | 1.25mm | 1.25mm | 1.25mm | 1.25mm | 1.25mm | 1.25mm | 1.25mm | 1.25mm | 1.25mm |
| | Manifold Pressure | | | | | | | | |
| | 11.0 | 11.0 | 11.0 | 11.0 | 11.0 | 11.0 | 11.0 | 11.0 | 11.0 |

* For Canadian Installations from 2000 to 4500 ft (610m to 1373m) use U.S.A. Column 2001 to 3000 ft (611m to 914m).
* Pour les installations au Canada entre 610m et 1373m (2000 to 4500 ft) utiliser la colonne à 611m et 914m (2001 to 3000 ft) des É. U.

**PLAQUE SIGNALÉTIQUE DE LA TROUSSE DE CONVERSION NAHC00101MH**
**(SUPPLANT: NAHB00101MH)**

L'appareil a été converti pour installation dans des habitations mobiles préfabriquées. Voir instructions d'installation pour les méthodes de conversion de gaz. Employer les pièces fournies par le fabricant, et les faire installer par des personnes qualifiées. Voir plaque signalétique principale pour le numéro du modèle de l'appareil et le débit d'entrée.

**REMARQUE:** Le débit d'entrée du gaz de la fournaise indiqué sur la plaque signalétique s'applique aux installations jusqú à 610m (2000 pieds) au-dessus du niveau de la mer. Aux États-Unis, le débit d'entrée pour les altitudes au-dessus de 610m (2000 pieds) doit être réduit de 2% pour chaque 305m (1000 pieds) au-dessus du niveau. Au Canada, le débit d'entrée doit être réduit par 5% pour les altitudes de 2000 pieds à 4500 pieds au-dessus du niveau de la mer.

**CARBURANT UTILISÉ: GAZ NATUREL** **PRESSION D'ENTRÉE (min - max): 4.5 - 13.6 PO COLONNE D'EAU**

La fournaise est fournie avec 44 orifices. Régler le débit d'entré selon la teneur en chaleur du gaz naturel local et l'altitude de l'installation pour déterminer le diamètre correct de l'orifice. Voir instructions d'installation.

344983-101 REV.A

A190087

**Fig. 22 – Conversion Kit Rating Plate**

THIS FURNACE WAS CONVERTED USING KIT NO. NAHC00101MH

FOR_____ ON ___/___/___ BY: _____
NATURAL / PROPANE (DAY - MONTH - YEAR) (NAME AND ADDRESS OF ORGANIZATION MAKING THIS CONVERSION)

FOR_____ ON ___/___/___ BY: _____
NATURAL / PROPANE (DAY - MONTH - YEAR) (NAME AND ADDRESS OF ORGANIZATION MAKING THIS CONVERSION)

Which accepts the responsibility that this conversion has been properly made.

CE GÉNÉRATEUR D´AIR CHAUD A ÉTÉ CONVERTI LE À L´AIDE DE L´ENSEMBLE N° NAHC00101MH POUR FONCTIONNER

AU GAZ_____ ___/___/___ PAR: _____
NATUREL / PÉTROLE LIQUÉFIÉ (JOUR-MOIS-ANNÉE) NOM ET ADRESSE DE L´ORGANISME QUI A EFFECTUÉ LA CONVERSION)

AU GAZ_____ ___/___/___ PAR: _____
NATUREL / PÉTROLE LIQUÉFIÉ (JOUR-MOIS-ANNÉE) NOM ET ADRESSE DE L´ORGANISME QUI A EFFECTUÉ LA CONVERSION)

Qui accepte l´entière responsabilité de la conversion.

344986-101 REV.A

A190088

**Fig. 23 - Conversion Responsibility Label**

**Table 3 – Orifice Size and Manifold Pressure (in. W.C.) for Gas Input Rate**

**SINGLE-STAGE FURNACE**

**(TABULATED DATA BASED ON 20,000 BTUH PER BURNER, DERATED 2%/1000 FT (305M) ABOVE SEA LEVEL)**

| ALTITUDE RANGE ft (m) | | AVG. GAS HEAT VALUE AT ALTITUDE (Btu/cu ft) | SPECIFIC GRAVITY OF NATURAL GAS | | | | | | | |
|---|---|---|---|---|---|---|---|---|---|---|
| | | | 0.58 | | 0.60 | | 0.62 | | 0.64 | |
| | | | Orifice No. | Manifold Pressure | Orifice No. | Manifold Pressure | Orifice No. | Manifold Pressure | Orifice No. | Manifold Pressure |
| U.S.A. and Canada | 0 (0) to 2000 (610) | 900 | 43 | 3.8 | 42 | 3.2 | 42 | 3.3 | 42 | 3.4 |
| | | 925 | 43 | 3.6 | 43 | 3.7 | 43 | 3.8 | 42 | 3.2 |
| | | 950 | 43 | 3.4 | 43 | 3.5 | 43 | 3.6 | 43 | 3.7 |
| | | 975 | **44** | **3.7** | **44** | **3.8** | 43 | 3.4 | 43 | 3.6 |
| | | 1000 | **44** | **3.5** | **44** | **3.6** | **44** | **3.8** | 43 | 3.4 |
| | | 1025 | **44** | **3.3** | **44** | **3.5** | **44** | **3.6** | **44** | **3.7** |
| | | 1050 | **44** | **3.2** | **44** | **3.3** | **44** | **3.4** | **44** | **3.5** |
| | | 1075 | 45 | 3.7 | 45 | 3.8 | **44** | **3.3** | **44** | **3.4** |
| | | 1100 | 46 | 3.7 | 46 | 3.8 | 45 | 3.8 | **44** | **3.2** |
| U.S.A. and Canada | U.S.A. 2001 (611) to 3000 (914) | 800 | 42 | 3.4 | 42 | 3.5 | 42 | 3.6 | 42 | 3.7 |
| | | 825 | 43 | 3.8 | 42 | 3.3 | 42 | 3.4 | 42 | 3.5 |
| | | 850 | 43 | 3.6 | 43 | 3.7 | 42 | 3.2 | 42 | 3.3 |
| | | 875 | 43 | 3.4 | 43 | 3.5 | 43 | 3.7 | 43 | 3.8 |
| | | 900 | **44** | **3.7** | **44** | **3.8** | 43 | 3.5 | 43 | 3.6 |
| | Canada 2001 (611) to 4500 (1372) | 925 | **44** | **3.5** | **44** | **3.6** | **44** | **3.8** | 43 | 3.4 |
| | | 950 | **44** | **3.3** | **44** | **3.4** | **44** | **3.6** | **44** | **3.7** |
| | | 975 | **44** | **3.2** | **44** | **3.3** | **44** | **3.4** | **44** | **3.5** |
| | | 1000 | **44** | **3.0** | **44** | **3.1** | **44** | **3.2** | **44** | **3.3** |
| U.S.A. Only | 3001 (915) to 4000 (1219) | 775 | 42 | 3.3 | 42 | 3.4 | 42 | 3.5 | 42 | 3.6 |
| | | 800 | 43 | 3.8 | 42 | 3.2 | 42 | 3.3 | 42 | 3.4 |
| | | 825 | 43 | 3.6 | 43 | 3.7 | 43 | 3.8 | 42 | 3.2 |
| | | 850 | **44** | **3.8** | 43 | 3.5 | 43 | 3.6 | 43 | 3.7 |
| | | 875 | **44** | **3.6** | **44** | **3.7** | 43 | 3.4 | 43 | 3.5 |
| | | 900 | **44** | **3.4** | **44** | **3.5** | **44** | **3.7** | **44** | **3.8** |
| | | 925 | **44** | **3.2** | **44** | **3.4** | **44** | **3.5** | **44** | **3.6** |
| | | 950 | **44** | **3.1** | **44** | **3.2** | **44** | **3.3** | **44** | **3.4** |
| U.S.A. Only | 4001 (1220) to 5000 (1524) | 750 | 42 | 3.3 | 42 | 3.4 | 42 | 3.5 | 42 | 3.6 |
| | | 775 | 43 | 3.7 | 43 | 3.8 | 42 | 3.3 | 42 | 3.4 |
| | | 800 | 43 | 3.5 | 43 | 3.6 | 43 | 3.7 | 43 | 3.8 |
| | | 825 | **44** | **3.8** | 43 | 3.4 | 43 | 3.5 | 43 | 3.6 |
| | | 850 | **44** | **3.5** | **44** | **3.7** | **44** | **3.8** | 43 | 3.4 |
| | | 875 | **44** | **3.3** | **44** | **3.5** | **44** | **3.6** | **44** | **3.7** |
| | | 900 | **44** | **3.2** | **44** | **3.3** | **44** | **3.4** | **44** | **3.5** |
| | | 925 | **44** | **3.0** | **44** | **3.1** | **44** | **3.2** | **44** | **3.3** |
| U.S.A. Only | 5001 (1525) to 6000 (1829) | 725 | 42 | 3.2 | 42 | 3.3 | 42 | 3.4 | 42 | 3.5 |
| | | 750 | 43 | 3.7 | 43 | 3.8 | 42 | 3.2 | 42 | 3.3 |
| | | 775 | 43 | 3.4 | 43 | 3.5 | 43 | 3.7 | 43 | 3.8 |
| | | 800 | **44** | **3.7** | **44** | **3.8** | 43 | 3.4 | 43 | 3.5 |
| | | 825 | **44** | **3.5** | **44** | **3.6** | **44** | **3.7** | **44** | **3.8** |
| | | 850 | **44** | **3.3** | **44** | **3.4** | **44** | **3.5** | **44** | **3.6** |
| | | 875 | **44** | **3.1** | **44** | **3.2** | **44** | **3.3** | **44** | **3.4** |
| | | 900 | **44** | **2.9** | **44** | **3.0** | **44** | **3.1** | **44** | **3.2** |
| U.S.A. Only | 6001 (1830) to 7000 (2133) | 675 | 42 | 3.4 | 42 | 3.5 | 42 | 3.6 | 42 | 3.8 |
| | | 700 | 42 | 3.2 | 42 | 3.3 | 42 | 3.4 | 42 | 3.5 |
| | | 725 | 43 | 3.6 | 43 | 3.7 | 43 | 3.8 | 42 | 3.3 |
| | | 750 | 43 | 3.4 | 43 | 3.5 | 43 | 3.6 | 43 | 3.7 |
| | | 775 | **44** | **3.6** | **44** | **3.7** | 43 | 3.4 | 43 | 3.5 |
| | | 800 | **44** | **3.4** | **44** | **3.5** | **44** | **3.6** | **44** | **3.7** |
| | | 825 | **44** | **3.2** | **44** | **3.3** | **44** | **3.4** | **44** | **3.5** |
| | | 850 | **44** | **3.0** | **44** | **3.1** | **44** | **3.2** | **44** | **3.3** |

A11253A

**Table 2 – Orifice Size and Manifold Pressure (in. W.C.) for Gas Input Rate (Cont.)**

## SINGLE-STAGE FURNACE

**(TABULATED DATA BASED ON 20,000 BTUH PER BURNER, DERATED 2%/1000 FT (305M) ABOVE SEA LEVEL)**

| | ALTITUDE RANGE ft (m) | AVG. GAS HEAT VALUE AT ALTITUDE (Btu/cu ft) | SPECIFIC GRAVITY OF NATURAL GAS | | | | | | | |
|---|---|---|---|---|---|---|---|---|---|---|
| | | | 0.58 | | 0.60 | | 0.62 | | 0.64 | |
| | | | Orifice No. | Manifold Pressure | Orifice No. | Manifold Pressure | Orifice No. | Manifold Pressure | Orifice No. | Manifold Pressure |
| U.S.A. Only | | 650 | 42 | 3.4 | 42 | 3.5 | 42 | 3.6 | 42 | 3.7 |
| | 7001 | 675 | 43 | 3.8 | 42 | 3.2 | 42 | 3.3 | 42 | 3.4 |
| | (2134) | 700 | 43 | 3.5 | 43 | 3.7 | 43 | 3.8 | 42 | 3.2 |
| | to | 725 | **44** | **3.8** | 43 | 3.4 | 43 | 3.5 | 43 | 3.6 |
| | | 750 | **44** | **3.5** | **44** | **3.7** | **44** | **3.8** | 43 | 3.4 |
| | 8000 | 775 | **44** | **3.3** | **44** | **3.4** | **44** | **3.5** | **44** | **3.7** |
| | (2438) | 800 | **44** | **3.1** | **44** | **3.2** | **44** | **3.3** | **44** | **3.4** |
| | | 825 | **44** | **2.9** | **44** | **3.0** | **44** | **3.1** | **44** | **3.2** |
| U.S.A. Only | | 625 | 42 | 3.4 | 42 | 3.5 | 42 | 3.6 | 42 | 3.7 |
| | 8001 | 650 | 43 | 3.8 | 42 | 3.2 | 42 | 3.3 | 42 | 3.4 |
| | (2439) | 675 | 43 | 3.5 | 43 | 3.6 | 43 | 3.7 | 42 | 3.2 |
| | to | 700 | **44** | **3.7** | 43 | 3.4 | 43 | 3.5 | 43 | 3.6 |
| | | 725 | **44** | **3.5** | **44** | **3.6** | **44** | **3.7** | **44** | **3.8** |
| | 9000 | 750 | **44** | **3.3** | **44** | **3.4** | **44** | **3.5** | **44** | **3.6** |
| | (2743) | 775 | **44** | **3.0** | **44** | **3.2** | **44** | **3.3** | **44** | **3.4** |
| U.S.A. Only | 9001 | 600 | 42 | 3.3 | 42 | 3.4 | 42 | 3.6 | 42 | 3.7 |
| | (2744) | 625 | 43 | 3.7 | 42 | 3.2 | 42 | 3.3 | 42 | 3.4 |
| | to | 650 | 43 | 3.5 | 43 | 3.6 | 43 | 3.7 | 43 | 3.8 |
| | | 675 | **44** | **3.7** | **44** | **3.8** | 43 | 3.4 | 43 | 3.5 |
| | 10000 | 700 | **44** | **3.4** | **44** | **3.5** | **44** | **3.7** | **44** | **3.8** |
| | (3048) | 725 | **44** | **3.2** | **44** | **3.3** | **44** | **3.4** | **44** | **3.5** |

* Orifice numbers shown in **BOLD** are factory-installed.

A11253B

**Table 4 – Gas Rate (CU ft./hr)**

| SECONDS FOR 1 REVOLUTION | SIZE OF TEST DIAL | | | SECONDS FOR 1 REVOLUTION | SIZE OF TEST DIAL | | |
|---|---|---|---|---|---|---|---|
| | 1 Cu Ft. | 2 Cu Ft. | 5 Cu Ft. | | 1 Cu Ft. | 2 Cu Ft. | 5 Cu Ft. |
| 10 | 360 | 720 | 1800 | 50 | 72 | 144 | 360 |
| 11 | 327 | 655 | 1636 | 51 | 71 | 141 | 355 |
| 12 | 300 | 600 | 1500 | 52 | 69 | 138 | 346 |
| 13 | 277 | 555 | 1385 | 53 | 68 | 136 | 340 |
| 14 | 257 | 514 | 1286 | 54 | 67 | 133 | 333 |
| 15 | 240 | 480 | 1200 | 55 | 65 | 131 | 327 |
| 16 | 225 | 450 | 1125 | 56 | 64 | 129 | 321 |
| 17 | 212 | 424 | 1059 | 57 | 63 | 126 | 316 |
| 18 | 200 | 400 | 1000 | 58 | 62 | 124 | 310 |
| 19 | 189 | 379 | 947 | 59 | 61 | 122 | 305 |
| 20 | 180 | 360 | 900 | 60 | 60 | 120 | 300 |
| 21 | 171 | 343 | 857 | 62 | 58 | 116 | 290 |
| 22 | 164 | 327 | 818 | 64 | 56 | 112 | 281 |
| 23 | 157 | 313 | 783 | 66 | 54 | 109 | 273 |
| 24 | 150 | 300 | 750 | 68 | 53 | 106 | 265 |
| 25 | 144 | 288 | 720 | 70 | 51 | 103 | 257 |
| 26 | 138 | 277 | 692 | 72 | 50 | 100 | 250 |
| 27 | 133 | 267 | 667 | 74 | 48 | 97 | 243 |
| 28 | 129 | 257 | 643 | 76 | 47 | 95 | 237 |
| 29 | 124 | 248 | 621 | 78 | 46 | 92 | 231 |
| 30 | 120 | 240 | 600 | 80 | 45 | 90 | 225 |
| 31 | 116 | 232 | 581 | 82 | 44 | 88 | 220 |
| 32 | 113 | 225 | 563 | 84 | 43 | 86 | 214 |
| 33 | 109 | 218 | 545 | 86 | 42 | 84 | 209 |
| 34 | 106 | 212 | 529 | 88 | 41 | 82 | 205 |
| 35 | 103 | 206 | 514 | 90 | 40 | 80 | 200 |
| 36 | 100 | 200 | 500 | 92 | 39 | 78 | 196 |
| 37 | 97 | 195 | 486 | 94 | 38 | 76 | 192 |
| 38 | 95 | 189 | 474 | 96 | 38 | 75 | 188 |
| 39 | 92 | 185 | 462 | 98 | 37 | 74 | 184 |
| 40 | 90 | 180 | 450 | 100 | 36 | 72 | 180 |
| 41 | 88 | 176 | 439 | 102 | 35 | 71 | 178 |
| 42 | 86 | 172 | 429 | 104 | 35 | 69 | 173 |
| 43 | 84 | 167 | 419 | 106 | 34 | 68 | 170 |
| 44 | 82 | 164 | 409 | 108 | 33 | 67 | 167 |
| 45 | 80 | 160 | 400 | 110 | 33 | 65 | 164 |
| 46 | 78 | 157 | 391 | 112 | 32 | 64 | 161 |
| 47 | 76 | 153 | 383 | 116 | 31 | 62 | 155 |
| 48 | 75 | 150 | 375 | 120 | 30 | 60 | 150 |
| 49 | 73 | 147 | 367 | | | | |

Copyright 2019 International Comfort Products • PO Box 128 • Lewisburg, TN 37091 USA
Specifications subject to change without notice.