N80MSU

80% AFUE, Single Stage, ECM Motor, Ultra Low NOx, 4-Way Multipoise, Non-Condensing, Gas Furnace (Minor Series 3)

Installation, Start-up, Operating and Service and Maintenance Instructions

Approved for installations up to 10,000 feet (3048 meters)

TABLE OF CONTENTS

Table 1 – Dimensions 2
SAFETY CONSIDERATIONS 2
INTRODUCTION 4
CODES AND STANDARDS. 5
ELECTROSTATIC DISCHARGE (ESD) PRECAUTIONS PROCEDURE 5
LOCATION 5
AIR FOR COMBUSTION AND VENTILATION 6
Table 2 – Minimum Free Area Required for Each Combustion Air Opening or Duct to Outdoors. 7
Table 3 – Minimum Space volumes for 100% combustion, Ventilation, and Dilution from Indoors 8
INSTALLATION 9
Table 4 – Opening Dimensions - In. (mm) 10
FILTER ARRANGEMENT 12
AIR DUCTS 12
GAS PIPING. 13
Table 5 – Maximum Capacity of Pipe* 14
ELECTRICAL CONNECTIONS. 14
Table 6 – Electrical Data 15
ACCESSORIES 16
VENTING. 16
Table 7 – Combined Appliance Maximum Input Rating in Thousands of BTUh per Hour 18
Table 8 – Minimum Allowable Input Rating of Space-Heating Appliance in Thousands of BTUh per Hour 18
AIR DELIVERY - CFM. 21
Table 9 – Air Delivery - CFM (with filter) 21
Table 10 – Airflow Settings. 22
FURNACE CONTROL PROGRAMMING AND NAVIGATION 22
Table 11 – System Status Display Codes. 22
Table 12 – Main Menu Options 23
SERVICE LABEL 24
START-UP, ADJUSTMENT, AND SAFETY CHECK 25
Table 13 – Test Sequence 25
WIRING DIAGRAM 26
Table 14 – Altitude Derate Multiplier for U.S.A. 27
Table 15 – Gas Rate (Cu Ft./Hr.). 27
Table 16 – Manifold Pressure for Gas Input Rate (in. w.c.) – 3.35 mm Orifice – USA Only 29
Table 17 – Manifold Pressure for Gas Input Rate (in. w.c.) – #18 Orifice – USA Only 29
Table 18 – Manifold Pressure for Gas Input Rate (in. w.c.) – #10 Orifice – USA Only 30
Table 19 – Manifold Pressure for Gas Input Rate (in. w.c.) – #6 Orifice – USA Only 31
SERVICE AND MAINTENANCE PROCEDURES. 31
CARE AND MAINTENANCE 32
Table 20 – Filter Size Information (In. / mm) 33
SEQUENCE OF OPERATION 36
TROUBLESHOOTING 38
PARTS REPLACEMENT INFORMATION GUIDE 42
MODEL NOMENCLATURE 42

To learn more about this appliance and installation via a mobile device, go to http://www.fasthvacrparts.com/NFC or use the QR code below. To access airflow tables or troubleshooting guide on your mobile device go to mlctraining.com/training/techdocs/43/ or use the QR code below.

Mobile App QR Code

Airflow QR Code

Use of the AHRI Certified TM Mark indicates a manufacturer's participation in the program. For verification of certification for individual products, go to www.ahridirectory.org .

ISO 9001 Quality

⚠ WARNING

CARBON MONOXIDE POISONING HAZARD

Failure to follow this warning could result in personal injury and/or death.

Carbon Monoxide (CO) is a colorless, odorless, and tasteless poisonous gas that can be fatal when inhaled. Follow all installation, maintenance, and service instructions. See additional information below regarding the installation of a CO Alarm.

Most states in the USA and jurisdictions in Canada have laws that require the use of Carbon Monoxide (CO) alarms with fuel burning products. Examples of fuel burning products are furnaces, boilers, space heaters, generators, water heaters, stoves/ranges, clothes dryers, fireplaces, incinerators, automobiles, and other internal combustion engines. Even if there are no laws in your jurisdiction requiring a CO Alarm, it's highly recommended that whenever any fuel burning product is used in or around the home or business that the dwelling be equipped with a CO Alarm(s). The Consumer Product Safety Commission recommends the use of CO Alarm(s). The CO Alarm(s) must be installed, operated, and maintained according to the CO Alarm manufacturer's instructions. For more information about Carbon Monoxide, local laws, or to purchase a CO Alarm online, please visit the following website. https://www.kidde.com.

Portions of the text and tables are reprinted from current edition of NFPA 54/ANSI Z223.1E, with permission of National Fire Protection Association, Quincy, MA 02269 and American Gas Association, Washington DC 20001. This reprinted material is not the complete and official position of the NFPA or ANSI on the referenced subject, which is represented only by the standard in its entirety.

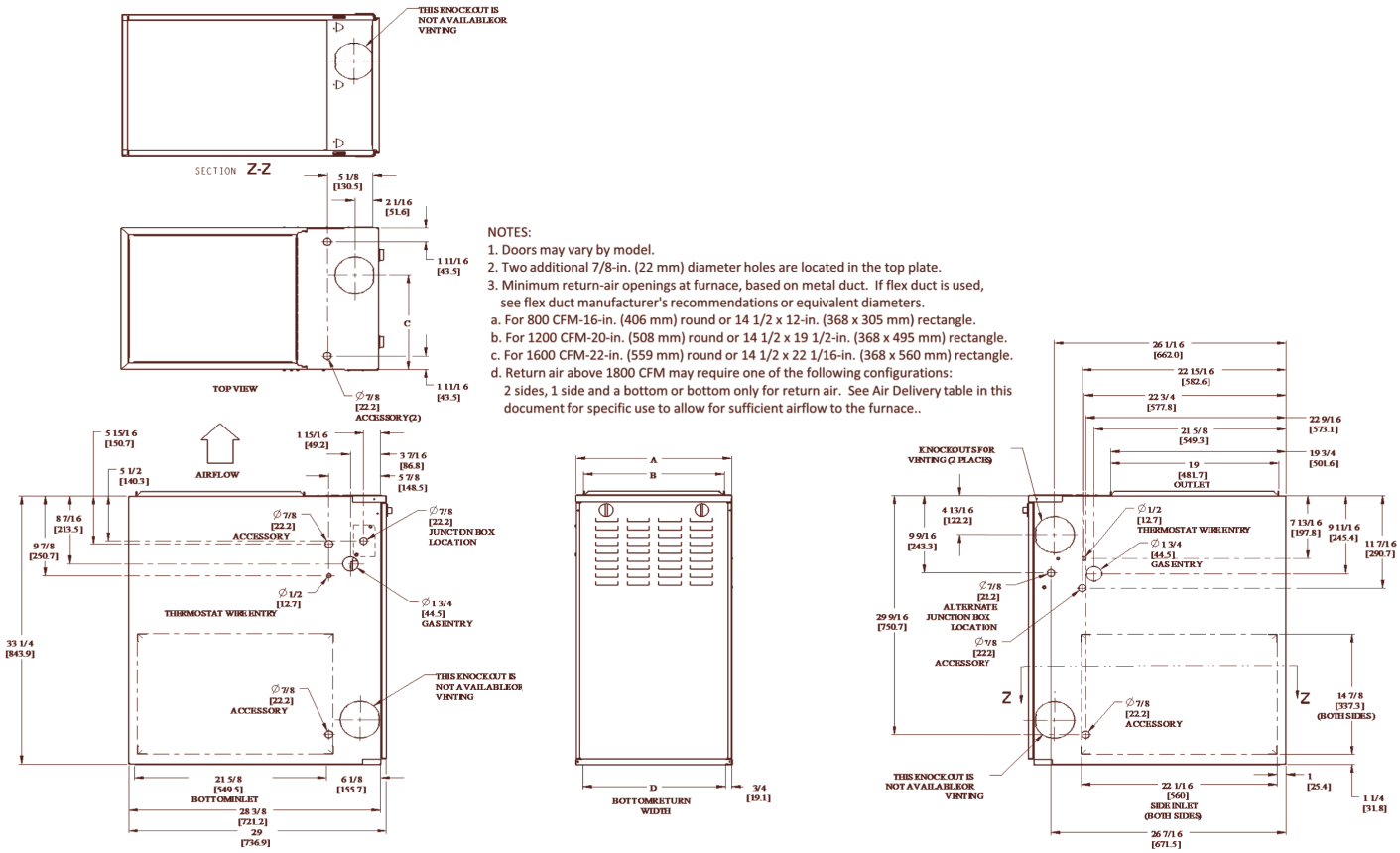

NOTES:
1. Doors may vary by model.
2. Two additional 7/8-in. (22 mm) diameter holes are located in the top plate.
3. Minimum return-air openings at furnace, based on metal duct. If flex duct is used, see flex duct manufacturer's recommendations or equivalent diameters.
a. For 800 CFM-16-in. (406 mm) round or 14 1/2 x 12-in. (368 x 305 mm) rectangle.
b. For 1200 CFM-20-in. (508 mm) round or 14 1/2 x 19 1/2-in. (368 x 495 mm) rectangle.
c. For 1600 CFM-22-in. (559 mm) round or 14 1/2 x 22 1/16-in. (368 x 560 mm) rectangle.
d. Return air above 1800 CFM may require one of the following configurations: 2 sides, 1 side and a bottom or bottom only for return air. See Air Delivery table in this document for specific use to allow for sufficient airflow to the furnace..

NOTE: ALL DIMENSIONS IN INCH (MM)

U.S. ECCN: Not Subject to Regulation (N.S.R.)SD5674-4 REV A

A210783

Fig. 1 – Dimensional Drawing

Table 1 – Dimensions

FURNACE SIZE	A CABINET WIDTH IN. (MM)	B OUTLET WIDTH IN. (MM)	C TOP FLUE COLLAR ONLY IN. (MM)	D BOTTOM INLET WIDTH IN. (MM)	VENT CONNECTION IN. (MM) SIZE	SHIP WT. LB. (KG)
0401712	17-1/2 (445)	15-7/8 (403)	11-9/16 (294)	16 (406)	4 (102)	123 (56)
0601716	17-1/2 (445)	15-7/8 (403)	11-9/16 (294)	16 (406)	4 (102)	127 (58)
0802120	21 (533)	19-3/8 (492)	13-5/16 (338)	19-1/2 (495)	4 (102)	149 (68)
1002120	21 (533)	19-3/8 (492)	13-5/16 (338)	19-1/2 (495)	4 (102)	153 (69)

SAFETY CONSIDERATIONS

⚠ WARNING

FIRE, EXPLOSION, ELECTRICAL SHOCK, AND CARBON MONOXIDE POISONING HAZARD

Failure to follow this warning could result in dangerous operation, serious injury, death, or property damage.

Improper installation, adjustment, alteration, service, maintenance, or use could cause carbon monoxide poisoning, explosion, fire, electrical shock, or other conditions which may cause personal injury or property damage. Consult a qualified service agency, local gas supplier, or your distributor or branch for information or assistance. The qualified service agency must use only factory-authorized accessories and replacement parts when installing and servicing this product.

⚠ WARNING

FIRE, EXPLOSION, ELECTRICAL SHOCK, AND CARBON MONOXIDE POINSING HAZARD

Failure to follow this warning could result in dangerous operation, personal injury, death, or property damage.

Furnaces shall NOT be twinned (i.e. tandem or staged operation) unless approved in factory technical specifications literature for the furnace. A factory authorized, field-supplied Twinning Kit MUST be used. Consult furnace pre-sale literature for specific models approved for twinning and the correct twinning kit. Twinned furnaces must be installed on both a common supply AND a common return duct system as shown in the Twinning Kit Installation Instructions. Only two furnaces can be twinned on a common supply and return duct system using a factory authorized twinning kit.

⚠ CAUTION

FURNACE RELIABILITY HAZARD

Improper installation or misapplication of furnace may require excessive servicing or cause premature component failure.

Application of this furnace should be indoors with special attention given to vent sizing and material, gas input rate, air temperature rise, unit leveling, and unit sizing.

⚠ WARNING

FIRE, INJURY, OR DEATH HAZARD

Failure to follow this warning could result in property damage, personal injury, or death.

Do not bypass any of the safety controls in the furnace, including but not limited to the main limit switch, rollout or burner thermal switch, and pressure switch/pressure transducer.

⚠ WARNING

PERSONAL INJURY AND PROPERTY DAMAGE HAZARD

Failure to follow this warning could result in property damage, personal injury, or death.

For continued performance, reliability, and safety, the only approved accessories and replacement parts are those specified by the equipment manufacturer. The use of non-manufacturer approved parts and accessories could invalidate the equipment limited warranty and result in fire risk, equipment malfunction, and failure. Please review manufacturer's instructions and replacement part catalogs available from your equipment supplier

Improper installation, adjustment, alteration, service, maintenance, or use can cause explosion, fire, electrical shock, or other conditions which may cause death, personal injury, or property damage. Consult a qualified installer, service agency, or your distributor or branch for information or assistance. The qualified installer or agency must use factory-authorized kits or accessories when modifying this product. Refer to the individual instructions packaged with the kits or accessories when installing.

Follow all safety codes. Wear safety glasses, protective clothing, and work gloves. Have a fire extinguisher available. Read these instructions thoroughly and follow all warnings or cautions include in literature and attached to the unit. Consult local building codes, the current editions of the current edition of National Fuel Gas Code (NFGC) NFPA 54/ANSI Z223.1 and the current edition of National Electrical Code (NEC) NFPA 70.

Recognize safety information. This is the safety-alert symbol ⚠. When you see this symbol on the unit and in instructions or manuals, be alert to the potential for personal injury.

Understand the signal words DANGER, WARNING, and CAUTION. These words are used with the safety-alert symbol. DANGER identifies the most serious hazards which will result in severe personal injury or death. WARNING signifies hazards which could result in personal injury or death. CAUTION is used to identify unsafe practices which may result in minor personal injury or product and property damage. NOTE is used to highlight suggestions which will result in enhanced installation, reliability, or operation.

⚠ CAUTION

CUT HAZARD

Failure to follow this caution may result in personal injury.

Sheet metal parts may have sharp edges or burrs. Use care and wear appropriate protective clothing, safety glasses and gloves when handling parts and servicing furnaces.

1. Use only with type of gas approved for this furnace. Refer to the furnace rating plate.
2. Install this furnace only in a location and position as specified in (LOCATION on p5).
3. Provide adequate combustion and ventilation air to the furnace space as specified in (AIR FOR COMBUSTION AND VENTILATION on p6).
4. Combustion products must be discharged outdoors. Connect this furnace to an approved vent system only, as specified in (VENTING on p16).
5. Never test for gas leaks with an open flame. Use a commercially available soap solution made specifically for the detection of leaks to check all connections, as specified in (GAS PIPING on p13).
6. Always install furnace to operate within the furnace's intended temperature-rise range with a duct system which has an external static pressure within the allowable range, as specified in (START-UP, ADJUSTMENT, AND SAFETY CHECK on p25). See furnace rating plate.
7. When a furnace is installed so that supply ducts carry air circulated by the furnace to areas outside the space containing the furnace, the return air shall also be handled by duct(s) sealed to the furnace casing and terminating outside the space containing the furnace. See (AIR DUCTS on p12).
8. A gas-fired furnace for installation in a residential garage must be installed as specified in the warning box in (LOCATION on p5). See Fig. 6.
9. The furnace is not permitted to be used for heating of buildings under construction.
10. These Multipoise Gas-Fired Furnaces are CSA (formerly A.G.A. and C.G.A). design-certified for use with natural gas (see furnace rating plate) and for installation in alcoves, attics, basements, closets, utility rooms, crawlspaces, and garages. The furnace is factory-shipped for use with natural gas and cannot be converted to propane gas.
11. See Fig. 3 for required clearances to combustible construction.
12. Maintain a 1-in. (25 mm) clearance from combustible materials to supply air ductwork for a distance of 36 inches (914 mm) horizontally from the furnace. See current edition of NFPA 90B or local code for further requirements.
13. These furnaces SHALL NOT be installed directly on carpeting, tile, or any other combustible material other than wood flooring. In downflow installations, factory accessory floor base MUST be used when installed on combustible materials and wood flooring. Special base is not required when this furnace is installed on manufacturer's approved coil assembly or a manufacturer's coil casing box is used. See Fig. 3 for clearance to combustible construction.

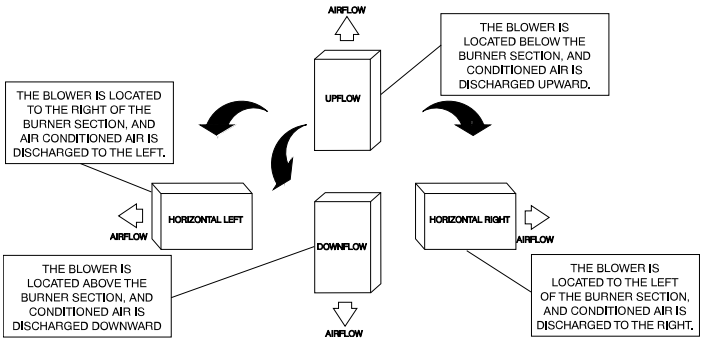

Fig. 2 – Multipoise Orientations

INTRODUCTION

⚠ WARNING

ELECTRIC SHOCK AND MOVING PARTS HAZARD

High voltage and rotating fan blades may be present in blower compartment when door switch is pressed. Keep hands clear.

⚠ WARNING

FIRE, EXPLOSION, ASPHYXIATION HAZARD

Improper adjustment, alteration, service, maintenance, or installation can cause serious injury or death.
Read and follow instructions and precautions in User's Information Manual provided with this furnace. Installation and service must be performed by a qualified service agency or the gas supplier.

⚠ CAUTION

Check entire gas assembly for leaks after lighting this appliance

INSTALLATION

This furnace must be installed in accordance with the manufacturer's instructions & local codes. In the absence of local codes, follow the National Fuel Gas Code ANSI Z223.1 / NFPA54 or CSA B-149.1 Gas Installation Code. This furnace must be installed so there are provisions for combustion & ventilation air. See manufacturer's installation information provided with this appliance.

OPERATION

This furnace is equipped with manual reset limit switch(es) in burner compartment to protect against overheat conditions that can result from inadequate combustion air supply or blocked vent conditions.

1. Do not bypass limit switches.
2. If a limit opens, call a quallified serviceman to correct the condition & reset limit switch.

INSTALLATION

MINIMUM INCHES CLEARANCE TO COMBUSTIBLE CONSTRUCTION

This furnace is for indoor installation in a building constructed on site.This furnace may be installed on combustible flooring in alcove or closet at minimum clearance as indicated in the table from combustible material. This furnace may be used with a Type B-1 Vent and may be vented in common with other gas fired appliances. This furnace is approved for UPFLOW, DOWNFLOW, and HORIZONTAL installations.

	TOP	BOTTOM †	SIDES *	BACK	FRONT Ø	VENT	FRONT SERVICE
Inches	1	0	0	0	3	0	24
mm	25.4	0	0	0	76.2	0	610
Vent Clearance to combustibles		Single Wall: 6 inch				Type B-1: 1 inch	

DOWNFLOW POSITIONS:

† Installation on non-combustible floors only. For installation on combustible flooring only when installed on a manufacturer approved special base kit or manufacturer recommended coil assembly.

Ø 18 inches front clearance required for alcove.

* Indicates supply or return sides when furnace is in the horizontal position. Line contact only permissible between lines formed by intersections of the Top and two Sides of the furnace jacket, and building joists, studs or framing.

352915-301 REV. -

Fig. 3 – Clearances to Combustibles

This 4-way multipoise Category I fan-assisted furnace is CSA design-certified. A Category I fan-assisted furnace is an appliance equipped with an integral mechanical means to either draw or force products of combustion through the combustion chamber and/or heat exchanger. The furnace is factory-shipped for use with natural gas.

This furnace is not approved for installation in mobile homes, recreational vehicles, or outdoors. The furnace is not permitted to be used for heating of buildings under construction. This furnace is designed for minimum continuous return-air temperature of 60°F (16°C) db or intermittent operation down to 55°F (13°C) db such as when used with a night setback thermostat. Return-air temperature must not exceed 80°F (27°C) db. Failure to follow these return-air temperature limits may affect reliability of heat exchangers, motors, and controls, see Fig. 4.

For accessory installation details, refer to the applicable instruction literature.

NOTE: Remove all shipping brackets and materials before operating the furnace.

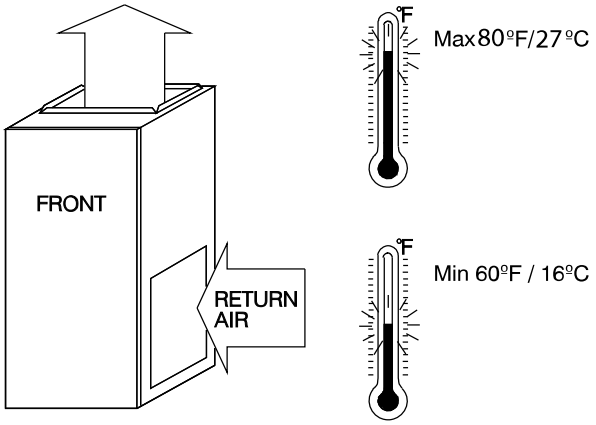

A221115

Fig. 4 – Return Air Temperature

⚠ WARNING

FIRE HAZARD

Failure to follow this warning could result in personal injury, death and/or property damage.

Do not install the furnace on its back or hang furnace with control compartment facing downward. Safety control operation will be adversely affected. Never connect return-air ducts to the back of the furnace. See Fig. 5.

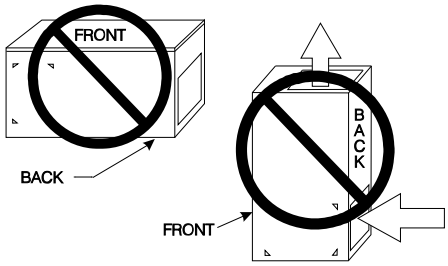

A02054

Fig. 5 – Prohibit Installation on Back

WARNING

FIRE HAZARD

Failure to follow this warning could result in personal injury, death, and/or property damage.

When the furnace is installed in a residential garage, the burners and ignition sources must be located at least 18 inches above the floor, see Fig. 6. The furnace must be located or protected to avoid damage by vehicles. When the furnace is installed in a public garage, airplane hangar, or other building having a hazardous atmosphere, the furnace must be installed in accordance with the NFGC.

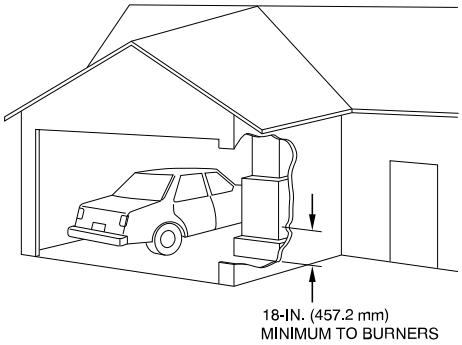

Fig. 6 – Installation in a Garage

CODES AND STANDARDS

Follow all national and local codes and standards in addition to these instructions. The installation must comply with regulations of the serving gas supplier, local building, heating, plumbing, and other codes. In absence of local codes, the installation must comply with the national codes listed below and all authorities having jurisdiction. In the United States, follow all codes and standards for the following:

Safety

- USA: Current edition of National Fuel Gas Code (NFGC) NFPA 54/ANSI Z223.1 and the Installation Standards, Warm Air Heating and Air Conditioning Systems ANSI/NFPA 90B

General Installation

- Current edition of the NFGC and the NFPA 90B. For copies, contact the National Fire Protection Association Inc., Batterymarch Park, Quincy, MA 02269; (www.NFPA.org) or for only the NFGC, contact the American Gas Association, 400 N. Capitol Street, N.W., Washington, DC 20001 (www.AGA.org).

Combustion and Ventilation Air

- Current edition of NFGC NFPA54/ANSI Z223.1 Section 9.3, Air for Combustion and Ventilation.

Duct Systems

- Air Conditioning Contractors Association (ACCA) Manual D, Sheet Metal and Air Conditioning Contractors National Association (SMACNA), or American Society of Heating, Refrigeration, and Air Conditioning Engineers (ASHRAE) 2005 Fundamentals Handbook Chapter 35 or 2004 HVAC Systems and Equipment Handbook Chapters 9 and 16.

Acoustical Lining and Fibrous Glass Duct

- Current edition of SMACNA and NFPA 90B as tested by UL Standard 181 for Class I Rigid Air Ducts

Gas Piping and Gas Pipe Pressure Testing

- Current edition of NFGC NFPA54/ANSI Z223.1; chapters 5, 6, 7, and 8 and National Plumbing Codes.

Electrical Connections

- Current edition of National Electrical Code (NEC) NFPA 70.

Venting

- Current edition of NFGC NFPA 54 / ANSI Z223.1; Chapters 12 and 13.

ELECTROSTATIC DISCHARGE (ESD) PRECAUTIONS PROCEDURE

CAUTION

FURNACE RELIABILITY HAZARD

Improper installation or service of furnace may cause premature furnace component failure.

Electrostatic discharge can affect electronic components. Follow the Electrostatic Discharge Precautions Procedure listed below during furnace installation and servicing to protect the furnace electronic control. Precautions will prevent electrostatic discharges from personnel and hand tools which are held during the procedure. These precautions will help to avoid exposing the control to electrostatic discharge by putting the furnace, the control, and the person at the same electrostatic potential.

1. Disconnect all power to the furnace. Multiple disconnects maybe required. DO NOT TOUCH THE CONTROL OR ANY WIRE CONNECTED TO THE CONTROL PRIOR TO DISCHARGING YOUR BODY'S ELECTROSTATIC CHARGE TO GROUND.
2. Firmly touch the clean, unpainted, metal surface of the furnace chassis which is close to the control. Firmly touch the clean, unpainted, metal surface of the furnace chassis which is close to the control. Tools held in a person's hand during grounding will be satisfactorily discharged.
3. After touching the chassis, you may proceed to service the control or connecting wires as long as you do nothing to recharge your body with static electricity (for example; DO NOT move or shuffle your feet, do not touch ungrounded objects, etc.).
4. If you touch ungrounded objects (and recharge your body with static electricity), firmly touch a clean, unpainted metal surface of the furnace again before touching control or wires.
5. Use this procedure for installed and uninstalled (ungrounded) furnaces.
6. Before removing a new control from its container, discharge your body's electrostatic charge to ground to protect the control from damage. If the control is to be installed in a furnace, follow items 1 through 4 before bringing the control or yourself in contact with the furnace. Put all used and new controls into containers before touching ungrounded objects.
7. An ESD service kit (available from commercial sources) may also be used to prevent ESD damage.

LOCATION

GENERAL

This multipoise furnace is shipped in packaged configuration. Some assembly and modifications are required when used in any of the four applications shown in Fig. 2.

This furnace must:

- be installed so the electrical components are protected from water.
- not be installed directly on any combustible material other than wood flooring for upflow applications. Downflow installations require use of a factory-approved floor base or coil assembly when installed on combustible materials or wood flooring (refer to SAFETY CONSIDERATIONS).
- be located close to the chimney or vent and attached to an air distribution system. Refer to Air Ducts section.

- be provided ample space for servicing and cleaning. Always comply with minimum fire protection clearances shown on the furnace clearance to combustible label.

⚠ WARNING

CARBON MONOXIDE POISONING HAZARD

Failure to follow this warning could result in personal injury or death, and unit component damage.

Corrosive or contaminated air may cause failure of parts containing flue gas, which could leak into the living space. Air for combustion must not be contaminated by halogen compounds, which include fluoride, chloride, bromide, and iodide. These elements can corrode heat exchangers and shorten furnace life. Air contaminants are found in aerosol sprays, detergents, bleaches, cleaning solvents, salts, air fresheners, and other household products. Do not install furnace in a corrosive or contaminated atmosphere. Make sure all combustion and circulating air requirements are met, in addition to all local codes and ordinances.

The following types of furnace installations may require OUTDOOR AIR for combustion due to chemical exposures:

- Commercial buildings
- Buildings with indoor pools
- Laundry rooms
- Hobby or craft rooms, and
- Chemical storage areas

If air is exposed to the following substances, it should not be used for combustion air, and outdoor air may be required for combustion:

- Permanent wave solutions
- Chlorinated waxes and cleaners
- Chlorine based swimming pool chemicals
- Water softening chemicals
- De-icing salts or chemicals
- Carbon tetrachloride
- Halogen type refrigerants
- Cleaning solvents (such as perchloroethylene)
- Printing inks, paint removers, varnishes, etc.
- Hydrochloric acid
- Cements and glues
- Antistatic fabric softeners for clothes dryers
- Masonry acid washing materials

All fuel-burning equipment must be supplied with air for fuel combustion. Sufficient air must be provided to avoid negative pressure in the equipment room or space. A positive seal must be made between the furnace cabinet and the return-air duct to prevent pulling air from the burner area and from draft safeguard opening.

⚠ CAUTION

PERSONAL INJURY AND/OR PROPERTY DAMAGE

Improper use or installation of this furnace may cause premature furnace component failure.

This furnace is not permitted to be used for heating of buildings under construction.

LOCATION RELATIVE TO COOLING EQUIPMENT

The cooling coil must be installed parallel with, or on the downstream side of the unit to avoid condensation in the heat exchangers. When installed parallel with the furnace, dampers or other flow control must prevent chilled air from entering the furnace. If the dampers are manually operated, they must be equipped with means to prevent operation of either unit unless the damper is in the full-heat or full-cool position.

⚠ CAUTION

FURNACE CORROSION HAZARD

Failure to follow this caution may result in furnace damage.

Air for combustion must not be contaminated by halogen compounds, which include fluoride, chloride, bromide, and iodide. These elements can corrode heat exchangers and shorten furnace life. Air contaminants are found in aerosol sprays, detergents, bleaches, cleaning solvents, salts, air fresheners, and other household products.

AIR FOR COMBUSTION AND VENTILATION

Provisions for adequate combustion, ventilation, and dilution air must be provided in accordance with:

- U.S. installations: Section 9.3 of the current edition of NFGC NFPA54/ANSI Z223.1, Air for Combustion and Ventilation, and applicable provisions of the local building codes.

⚠ WARNING

CARBON MONOXIDE POISONING HAZARD

Failure to follow this warning could result in personal injury or death.

The operation of exhaust fans, kitchen ventilation fans, clothes dryers, attic exhaust fans or fireplaces could create a NEGATIVE PRESSURE CONDITION at the furnace. Make-up air MUST be provided for the ventilation devices, in addition to that required by the furnace. Refer to Carbon Monoxide Poisoning Hazard warning in venting section of these instructions to determine if an adequate amount of make-up air is available.

The requirements for combustion and ventilation air depend upon whether or not the furnace is located in a space having a volume of at least 50 cubic feet per 1,000 BTUh input rating for all gas appliances installed in the space.

- Spaces having less than 50 cubic feet per 1,000 BTUh require the OUTDOOR COMBUSTION AIR METHOD.
- Spaces having at least 50 cubic feet per 1,000 BTUh may use the INDOOR COMBUSTION AIR, STANDARD or KNOWN AIR INFILTRATION METHOD.

Outdoor Combustion Air Method

1. Provide the space with sufficient air for proper combustion, ventilation, and dilution of flue gases using permanent horizontal or vertical duct(s) or opening(s) directly communicating with the outdoors or spaces that freely communicate with the outdoors.
2. Fig. 7 illustrates how to provide TWO OUTDOOR OPENINGS, one inlet and one outlet combustion and ventilation air opening, to the outdoors.
   a. One opening MUST commence within 12" (300 mm) of the ceiling and the second opening MUST commence within 12" (300 mm) of the floor.
   b. Size openings and ducts per Fig. 7 and Table 2.
   c. WO HORIZONTAL DUCTS require 1 square inch of free area per 2,000 BTUh (1,100 mm^2/kW) of combined input for all gas appliances in the space per Fig. 7 and Table 2.
   d. TWO OPENINGS OR VERTICAL DUCTS require 1 square inch of free area per 4,000 BTUh (550 mm^2/kW) for combined input of all gas appliances in the space per Fig. 7 and Table 2.
3. ONE OUTDOOR OPENING requires:
   a. 1 square inch of free area per 3,000 BTUh (734 mm^2/kW) for combined input of all gas appliances in the space per Table 2 and

b. Not less than the sum of the areas of all vent connectors in the space.

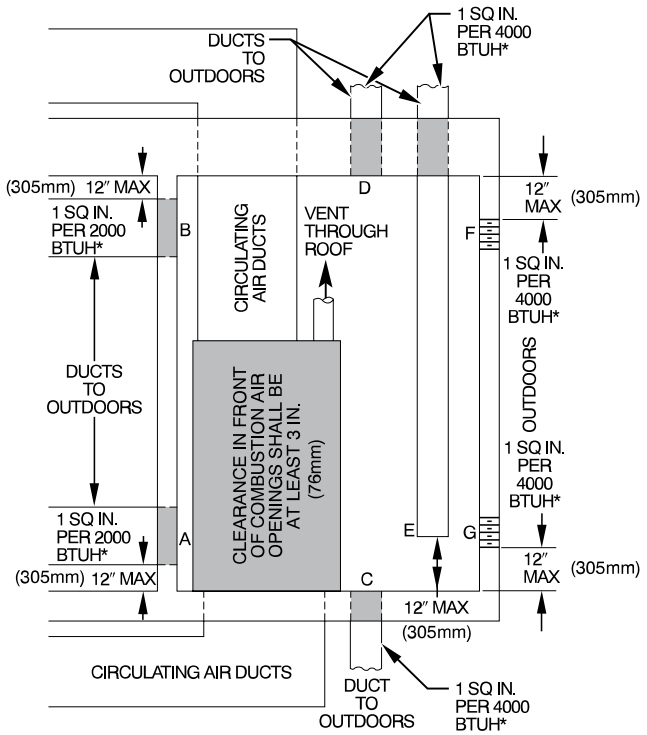

*Minimum dimensions of 3 in. (76 mm).
NOTE: Use any of the following combinations of openings:
A&B, C&D, D&E, F&G

A03174

Fig. 7 – Air for Combustion, Ventilation, and Dilution from Outdoors

The opening shall commence within 12" (300 mm) of the ceiling. Appliances in the space shall have clearances of at least 1" (25 mm) from the sides and back and 6" (150 mm) from the front. The opening shall directly communicate with the outdoors or shall communicate through a vertical or horizontal duct to the outdoors or spaces (crawl or attic) that freely communicate with the outdoors.

Indoor Combustion Air - NFPA & AGA

Standard and Known-Air-Infiltration Rate Methods

Indoor air is permitted for combustion, ventilation, and dilution, if the Standard or Known-Air-Infiltration Method is used.

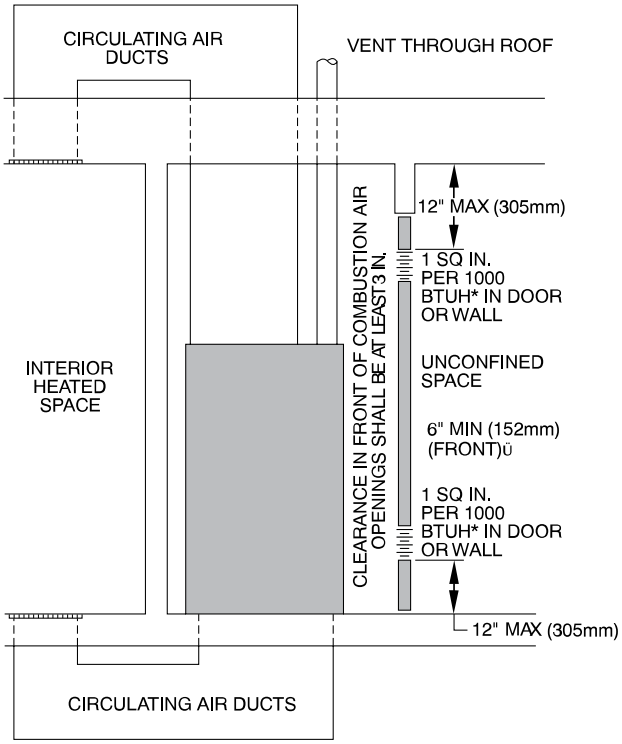

*Minimum opening size is 100 in.2 with minimum dimensions of 3 in. (76 mm).
*Minimum of 3 in. (76 mm), when type -B1 vent is used.

A03175

Fig. 8 – Air for Combustion, Ventilation, and Dilution from Indoors

⚠ WARNING

CARBON MONOXIDE POISONING HAZARD

Failure to follow this warning could result in death and/or personal injury.

Many homes require air to be supplied from outdoors for furnace combustion, ventilation, and dilution of flue gases. The furnace combustion air supply must be provided in accordance with this instruction manual.

Table 2 – Minimum Free Area Required for Each Combustion Air Opening or Duct to Outdoors

FURNACE INPUT (BTUh)	TWO HORIZONTAL DUCTS (1 SQ. IN./2,000 BTUh) (1,100 SQ. MM/KW)		SINGLE DUCT OR OPENING (1 SQ. IN./3,000 BTUh) (734 SQ. MM/KW)		TWO OPENINGS OR VERTICAL DUCTS (1 SQ. IN./4,000 BTUh) (550 SQ. MM/KW)	
	Free Area of Opening and Duct Sq. In (Sq. mm)	Round Duct In. (mm) Dia	Free Area of Opening and Duct Sq. In (Sq. mm)	Round Duct In. (mm) Dia	Free Area of Opening and Duct Sq. In (mm)	Round Duct In. (mm) Dia.
40,000	20 (12904)	5 (127)	14 (8696)	5 (127)	10 (6452)	4 (102)
60,000	30 (19355)	6 (152)	20 (13043)	5 (127)	15 (9678)	5 (127)
80,000	40 (25807)	7 (178)	27 (17391)	6 (152)	20 (12904)	5 (127)
100,000	50 (32258)	8 (203)	34 (21739)	7 (178)	25 (16130)	6 (152)

EXAMPLE: Determining Free Area

FURNACE		WATER HEATER		TOTAL INPUT		
100,000	+	30,000	=	(130,000 divided by 4,000)	=	32.5 Sq. In. for each two Vertical Ducts or Openings
60,000	+	40,000	=	(100,000 divided by 3,000)	=	33.3 Sq. In. for each Single Duct or Opening
80,000	+	30,000	=	(110,000 divided by 2,000)	=	55.0 Sq. In. for each two Horizontal Ducts

Table 3 – Minimum Space volumes for 100% combustion, Ventilation, and Dilution from Indoors

ACH*	OTHER THAN FAN-ASSISTED TOTAL (1,000'S BTUh GAS INPUT RATE			FAN-ASSISTED TOTAL (1,000'S BTUh GAS INPUT RATE)			
	30	40	50	40	60	80	100
	Space Volume (ft.3)						
0.60	1,050	1,400	1,750	1,000	1,500	2,000	3,300
0.50	1,260	1,680	2,100	1,200	1,800	2,400	3,960
0.40	1,575	2,100	2,625	1,500	2,250	3,000	4,950
0.30	2,100	2,800	3,500	2,000	3,000	4,000	6,600
0.20	3,150	4,200	5,250	3,000	4,500	6,000	9,900
0.10	6,300	8,400	10,500	6,000	9,000	12,000	19,800
0.00	NP	NP	NP	NP	NP	NP	NP

*. Air Changes/Hour

The Standard Method

1. The space has no less volume than 50 cubic feet per 1,000 BTUh of the maximum input ratings for all gas appliances installed in the space and
2. The air infiltration rate is not known to be less than 0.40 air changes per hour (ACH).

The Known Air Infiltration Rate Method shall be used, if the infiltration rate is known to be:

1. Less than 0.40 ACH and
2. Equal to or greater than 0.10 ACH

Infiltration rates greater than 0.60 ACH shall not be used. The minimum required volume of the space varies with the number of ACH and shall be determined per Table 3 or Equations 1 and 2. Determine the minimum required volume for each appliance in the space and add the volumes together to get the total minimum required volume for the space. Table 3 - **Minimum Space Volumes** were determined by using the following equations from the current edition of National Fuel Gas Code ANSI Z223.1/NFPA 54, 9.3.2.2:

1. For **other than fan-assisted appliances**, such as a draft hood-equipped water heater:

$$\text{Volume}_{\text{Other}} = \frac{21\text{ft}^3}{\text{ACH}}\left(\frac{I_{\text{other}}}{1000\ \text{Btu/hr}}\right)$$

A04002

2. For fan-assisted appliances such as this furnace:

$$\text{Volume}_{\text{Fan}} = \frac{15\text{ft}^3}{\text{ACH}}\left(\frac{I_{\text{fan}}}{1000\ \text{Btu/hr}}\right)$$

A004003

– If:

I_{other} = combined input of all other than fan-assisted appliances in BTUh/hr

I_{fan} = combined input of all fan-assisted appliances in BTUh/hr

ACH = air changes per hour (ACH shall not exceed 0.60.)

The following requirements apply to the Standard Method and to the Known Air Infiltration Rate Method.

1. Adjoining rooms can be considered part of a space if:
   a. There are no closeable doors between rooms.
   b. Combining spaces on same floor level. Each opening shall have free area of at least 1 in.^{2}/1,000 BTUh (2,000 mm^2/kW) of the total input rating of all gas appliances in the space, but not less than 100 in.^{2} (0.06 m^2). One opening shall commence within 12" (300 mm) of the ceiling and the second opening shall commence within 12" (300 mm) of the floor. The minimum dimension of air openings shall be at least 3 in. (80 mm), see Fig. 8.
   c. Combining space on different floor levels. The volumes of spaces on different floor levels shall be considered as communicating spaces if connected by one or more permanent openings in doors or floors having free area of at least 2 in.^{2}/1,000 BTUh (4,400 mm^2/kW) of total input rating of all gas appliances.
2. An attic or crawlspace may be considered a space that freely communicates with the outdoors provided there are adequate permanent ventilation openings directly to outdoors having free area of at least 1-in.^{2}/4,000 BTUh of total input rating for all gas appliances in the space.

⚠ CAUTION

UNIT DAMAGE HAZARD

Failure to follow this Caution may result in unit damage or failure.

Units installed in attics with loose or blown-in insulation must have at least a Merv 5 rated filter covering the door louvers and sealed as described in SMB21-0010, or use kit AGALFTULN01A17(21).

3. In spaces that use the Indoor Combustion Air Method, infiltration should be adequate to provide air for combustion, permanent ventilation and dilution of flue gases. However, in buildings with unusually tight construction, additional air MUST be provided using the methods described in the Outdoor Combustion Air Method section.

Unusually tight construction is defined as construction with:

a. Walls and ceilings exposed to the outdoors have a continuous, sealed vapor barrier. Openings are gasketed or sealed and
b. Doors and openable windows are weatherstripped and
c. Other openings are caulked or sealed. These include joints around window and door frames, between sole plates and floors, between wall-ceiling joints, between wall panels, at penetrations for plumbing, electrical and gas lines, etc.

Combination of Indoor and Outdoor Air

1. Indoor openings shall comply with the Indoor Combustion Air Method below and,
2. Outdoor openings shall be located as required in the Outdoor Combustion Air Method mentioned previously and,
3. Outdoor openings shall be sized as follows:
   a. Calculate the Ratio of all Indoor Space volume divided by required volume for Indoor Combustion Air Method below.
   b. Outdoor opening size reduction Factor is 1 minus the Ratio in a. above.
   c. Minimum size of Outdoor openings shall be the size required in Outdoor Combustion Air Method above multiplied by reduction Factor in b. above. The minimum dimension of air openings shall be not less than 3 in. (80 mm).

INSTALLATION

Upflow Installation

Bottom Return Air Inlet

These furnaces are shipped with bottom closure panel installed in bottom return-air opening. Remove and discard this panel when bottom return air is used. To remove bottom closure panel, perform the following:

1. Tilt or raise furnace and remove two screws holding bottom filler panel, see Fig. 9.

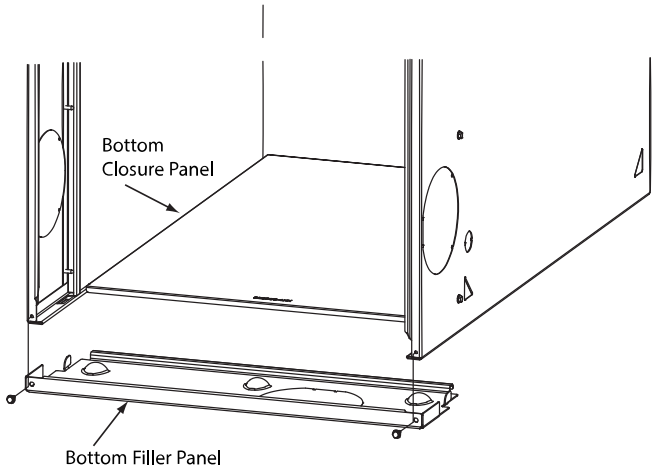

A10273

Fig. 9 – Removing Bottom Closure Panel

2. Rotate bottom filler panel downward to release holding tabs.
3. Remove bottom closure panel.
4. Reinstall bottom filler panel and screws.

Side Return Air Inlet

These furnaces are shipped with bottom closure panel installed in bottom return-air opening. This panel MUST be in place when only side return air is used.

NOTE: Side return-air openings can be used in UPFLOW and most HORIZONTAL configurations. Do not use side return-air openings in DOWNFLOW configuration.

Leveling Legs (If Desired)

In upflow position with side return inlet(s), leveling legs may be used, see Fig. 10. Install field-supplied, 5/16 x 1-1/2 in. (8 x 38 mm) (max) corrosion-resistant machine bolts, washers and nuts.

NOTE: Bottom closure must be used when leveling legs are used. It may be necessary to remove and reinstall bottom closure panel to install leveling legs. To remove bottom closure panel, see Item 1. in Bottom Return Air Inlet section.

To install leveling legs:

1. Position furnace on its back. Locate and drill a hole in each bottom corner of furnace, see Fig. 10.

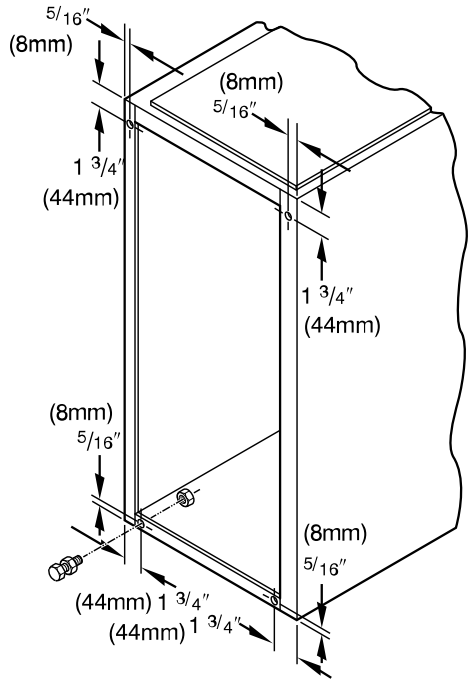

A89014

Fig. 10 – Leveling Legs

2. For each leg, install nut on bolt and then install bolt and nut in hole. (Install flat washer if desired.)
3. Install another nut on other side of furnace base. (Install flat washer if desired.)
4. Adjust outside nut to provide desired height, and tighten inside nut to secure arrangement.
5. Reinstall bottom closure panel if removed.

Downflow Installation

WARNING

FIRE AND PROPERTY HAZARD

Failure to follow this warning could result in equipment damage, personal injury, or property damage.

When furnace is installed in a downflow application, make sure water lines and other sources of water cannot drip or fail in such a way that water can collect on the blower motor, wiring, and furnace control board.

NOTE: For downflow applications, this furnace is approved for use on combustible flooring when any one of the following 3 accessories are used:

- Manufacturer's approved downflow combustible floor subbase
- Manufacturer's approved cased evaporator coil
- Manufacturer's approved evaporator coil casing

1. Determine application being installed from Table 4.
2. Construct hole in floor per Table 4 and Fig. 11.
3. Construct plenum to dimensions specified in Table 4 and Fig. 11.
4. If downflow subbase is used, install as shown in Fig. 12. If manufacturer's cased evaporator coil or coil casing is used, install as shown in Fig. 13.

NOTE: It is required that the perforated supply-air duct flanges be completely folded over or removed from furnace when installing the furnace on a factory-supplied cased coil or coil box. To remove the supply-air duct flange, use wide duct pliers or hand seamers to bend flange back and forth until it breaks off. Be careful of sharp edges, see Fig. 17.

Bottom Return Air Inlet

These furnaces are shipped with bottom closure panel installed in bottom return-air opening. Remove and discard this panel when bottom return air is used. To remove bottom closure panel, perform the following:

1. Tilt or raise furnace and remove two screws holding bottom filler panel, see Fig. 9.
2. Rotate bottom filler panel downward to release holding tabs.
3. Remove bottom closure panel.
4. Reinstall bottom filler panel and screws

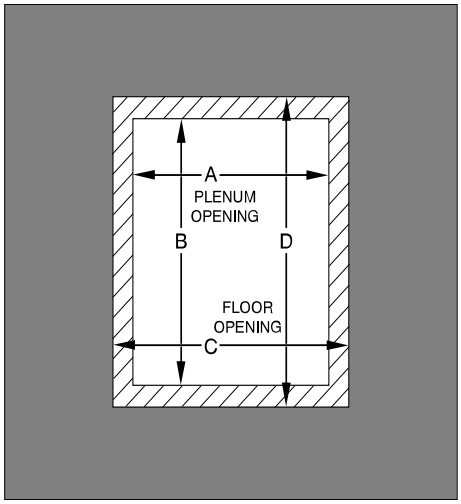

A96283

Fig. 11 – Floor and Plenum Opening Dimensions

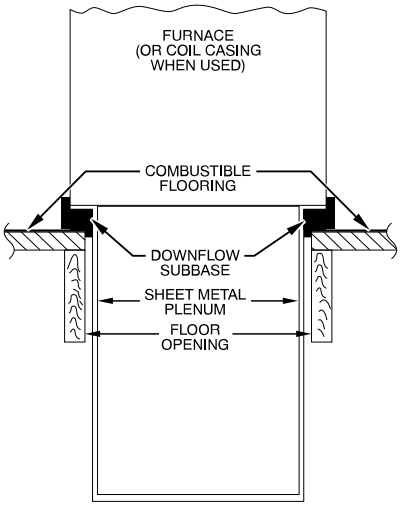

A96285

Fig. 12 – Furnace, Plenum, and Subbase Installed on a Combustible Floor

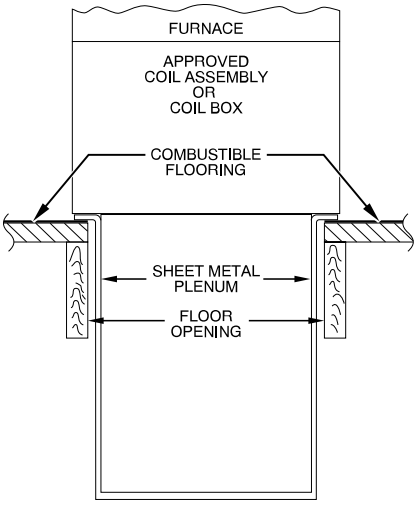

A08556

Fig. 13 – Furnace, Plenum, and Coil Assembly or Coil Box Installed on a Combustible Floor

Table 4 – Opening Dimensions - In. (mm)

FURNACE CASING WIDTH	APPLICATION	PLENUM OPENING		FLOOR OPENING	
		A	B	C	D
17–1/2 (445)	Upflow Applications on Combustible or Noncombustible Flooring (subbase not required)	16 (406)	21-5/8 (549)	16-5/8 (422)	22-1/4 (565)
	Downflow Applications on Noncombustible Flooring (subbase not required)	15-7/8 (403)	19 (483)	16-1/2 (419)	19-5/8 (498)
	Downflow applications on combustible flooring (subbase required)	15-1/8 (384)	19 (483)	16-3/4 (425)	20-5/8 (600)
	Downflow Applications on Combustible Flooring with Coil Assembly or coil box (subbase not required)	15-1/2 (394)	19 (483)	16-1/2 (419)	20 (508)
21 (533)	Upflow Applications on Combustible or Noncombustible Flooring (subbase not required)	19-1/2 (495)	21-5/8 (549)	20-1/8 (511)	22-1/4 (565)
	Downflow Applications on Noncombustible Flooring (subbase not required)	19-3/8 (492)	19 (483)	20 (508)	19-5/8 (498)
	Downflow applications on combustible flooring subbase required)	18-5/8 (473)	19 (483)	20-1/4 (514)	20-5/8 (600)
	Downflow Applications on Combustible Flooring with Coil Assembly or coil box (subbase not required)	19 (483)	19 (483)	20 (508)	20 (508)

⚠ WARNING

FIRE, EXPLOSION, AND CARBON MONOXIDE POISONING HAZARD

Failure to follow this warning could result in personal injury, death, and/or property damage.

Do not install the furnace on its back or hang furnace with control compartment facing downward. Safety control operation will be adversely affected. Never connect return-air ducts to the back of the furnace.

Horizontal Installation

The furnace can be installed horizontally in an attic or crawl space on either the left-hand (LH) or right-hand (RH) side. The furnace can be hung from floor joists, rafters or trusses or installed on a non-combustible platform, blocks, bricks or pad.

Suspended Furnace Support

The furnace may be supported under each end with threaded rod, angle iron or metal plumber's strap as shown, see Fig. 15 and Fig. 16. Secure angle iron to bottom of furnace as shown. Heavy-gauge sheet metal straps (plumber's straps) may be used to suspend the furnace from each bottom corner. To prevent screws from pulling out, use 2 #8 x 3/4" (19 mm) screws into the side and 2 #8 x 3/4" (19 mm) screws in the bottom of the furnace casing for each strap, see Fig. 15 and Fig. 16. If the screws are attached to ONLY the furnace sides and not the bottom, the straps must be vertical against the furnace sides and not pull away from the furnace sides, so that the strap attachment screws are not in tension (are loaded in shear) for reliable support.

Platform Furnace Support

Construct working platform at location where all required furnace clearances are met, see Fig. 3 and Fig. 14. For furnaces with 1" (25 mm) clearance requirement on side, set furnace on noncombustible blocks, bricks or angle iron. For crawl space installations, if the furnace is not suspended from the floor joists, the ground underneath furnace must be level and the furnace set on blocks or bricks.

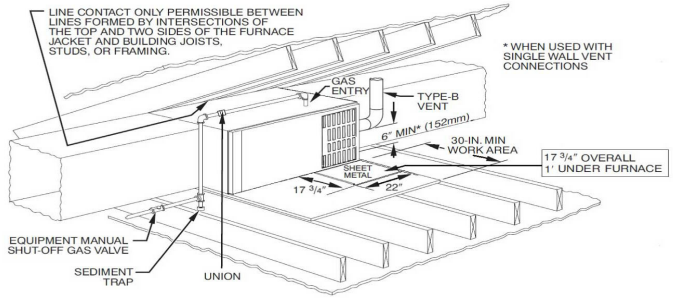

A180240

Fig. 14 – Typical Attic Installation

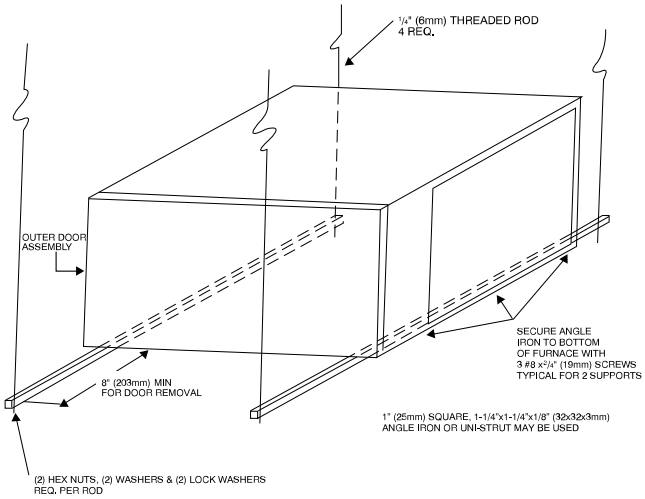

A10130

Fig. 15 – Horizontal Unit Suspension

Roll-Out Protection

Provide a minimum 17-3/4" x 22" (451 mm x 559 mm) piece of sheet metal for flame roll-out protection in front of burner area for furnaces closer than 12" (305 mm) above the combustible deck or suspended furnaces closer than 12" (305 mm) to joists. The sheet metal MUST extend underneath the furnace casing by 1" (25 mm) with the door removed.

The bottom closure panel on furnaces of widths 17-1/2" (445 mm) and larger may be used for flame roll-out protection when bottom of furnace is used for return air connection. See Fig. 14 for proper orientation of roll-out shield.

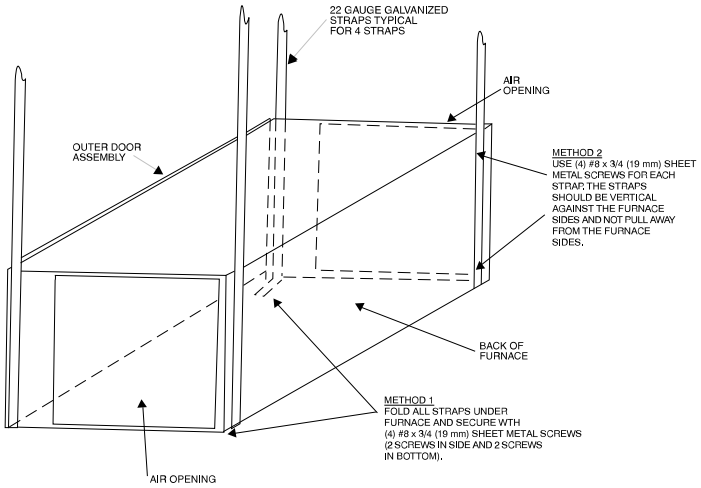

A10131

Fig. 16 – Horizontal Suspension with Straps

Bottom Return Air Inlet

These furnaces are shipped with bottom closure panel installed in bottom return-air opening. Remove and discard this panel when bottom return air is used. To remove bottom closure panel, perform the following:

1. Tilt or raise furnace and remove two screws holding bottom filler panel, see Fig. 9.
2. Rotate bottom filler panel downward to release holding tabs.
3. Remove bottom closure panel.
4. Reinstall bottom filler panel and screws. Side Return Air Inlet

Side Return Air Inlet

These furnaces are shipped with bottom closure panel installed in bottom return-air opening. This panel MUST be in place when side return air inlet(s) is used without a bottom return air inlet.

FILTER ARRANGEMENT

WARNING

CARBON MONOXIDE AND POISONING HAZARD

Failure to follow this warning could result in personal injury, or death.

Never operate a furnace without a filter or with filter access door removed.

There are no provisions for an internal filter rack in these furnaces.

A field-supplied accessory external filter is required.

Refer to the instructions supplied with the external filter rack for assembly and installation options.

AIR DUCTS

General Requirements

The duct system should be designed and sized according to accepted national standards such as those published by: Air Conditioning Contractors Association (ACCA), Sheet Metal and Air Conditioning Contractors National Association (SMACNA) or American Society of Heating, Refrigerating and Air Conditioning Engineers (ASHRAE) or consult The Air Systems Design Guidelines reference tables available from your local distributor. The duct system should be sized to handle the required system design CFM at the design external static pressure. The furnace airflow rates are provided in Table 9 - AIR DELIVERY-CFM (with filter).

When a furnace is installed so that the supply ducts carry air circulated by the furnace to areas outside the space containing the furnace, the return air shall also be handled by duct(s) sealed to the furnace casing and terminating outside the space containing the furnace.

Secure ductwork with proper fasteners for type of ductwork used. Seal supply- and return-duct connections to furnace with code approved tape or duct sealer.

NOTE: Flexible connections should be used between ductwork and furnace to prevent transmission of vibration. Ductwork passing through unconditioned space should be insulated and sealed to enhance system performance. When air conditioning is used, a vapor barrier is recommended.

Maintain a 1" (25 mm) clearance from combustible materials to supply air ductwork for a distance of 36" (914 mm) horizontally from the furnace. See NFPA 90B or local code for further requirements.

Ductwork Acoustical Treatment

NOTE: Metal duct systems that do not have a 90 degree elbow and 10 ft. (3 M) of main duct to the first branch take-off may require internal acoustical lining. As an alternative, fibrous ductwork may be used if constructed and installed in accordance with the latest edition of SMACNA construction standard on fibrous glass ducts. Both acoustical lining and fibrous ductwork shall comply with NFPA 90B as tested by UL Standard 181 for Class 1 Rigid air ducts.

Supply Air Connections

For a furnace not equipped with a cooling coil, the outlet duct shall be provided with a removable access panel. This opening shall be accessible when the furnace is installed and shall be of such a size that the heat exchanger can be viewed for possible openings using light assistance or a probe can be inserted for sampling the air stream. The cover attachment shall prevent leaks.

Upflow and Horizontal Furnaces

Connect supply-air duct to flanges on furnace supply-air outlet. Bend flange upward to 90° with wide duct pliers, see Fig. 17. The supply-air duct must be connected to ONLY the furnace supply-outlet-air duct flanges or air conditioning coil casing (when used). DO NOT cut main furnace casing side to attach supply air duct, humidifier, or other accessories. All accessories MUST be connected to duct external to furnace main casing.

NOTE: For horizontal applications, the top-most flange may be bent past 90 degrees to allow the evaporator coil to hang on the flange temporarily while the remaining attachment and sealing of the coil are performed.

Downflow Furnaces

Connect supply-air duct to supply-air outlet on furnace. Bend flange inward past 90° with wide duct pliers, see Fig. 17. The supply-air duct must be connected to ONLY the furnace supply outlet or air conditioning coil casing (when used). When installed on combustible material, supply-air duct must be connected to ONLY the factory-approved accessory subbase or a factory- approved air conditioning coil casing. DO NOT cut main furnace casing to attach supply side air duct, humidifier, or other accessories. All accessories MUST be connected to duct external to furnace casing.

Return Air Connections

WARNING

FIRE HAZARD

Failure to follow this warning could cause personal injury, death and/or property damage.

Never connect return-air ducts to the back of the furnace. Follow instructions below

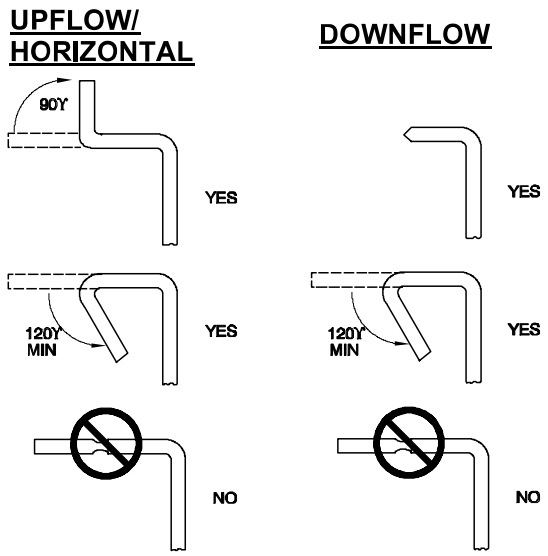

Fig. 17 – Duct Flanges

Downflow Furnaces

The return-air duct must be connected to return-air opening (bottom inlet) as shown in Fig. 19. DO NOT cut into casing sides (left or right). Side opening is permitted for only upflow and most horizontal furnaces, see Fig. 19. Bypass humidifier connections should be made at ductwork or coil casing sides exterior to furnace.

Upflow and Horizontal Furnaces

The return-air duct must be connected to bottom, sides (left or right), or a combination of bottom and side(s) of main furnace casing as shown in Fig. 18 and Fig. 20. Bypass humidifier may be attached into unused return air side of the furnace casing, see Fig. 18 and Fig. 20.

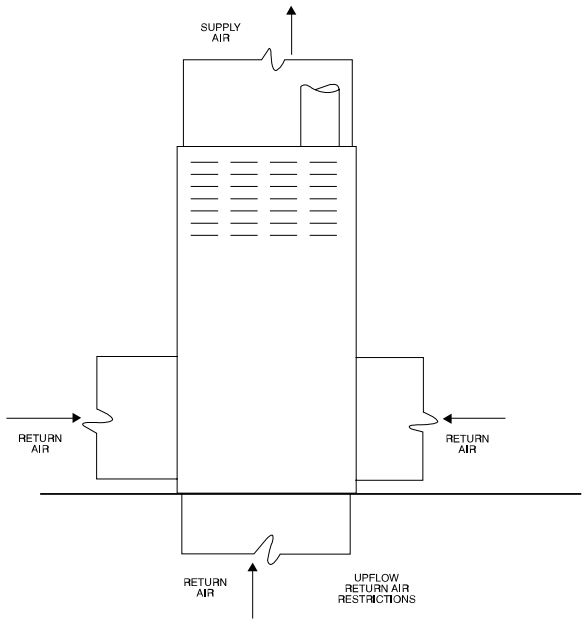

A190364

Fig. 18 – Upflow Return Air Configurations and Restrictions

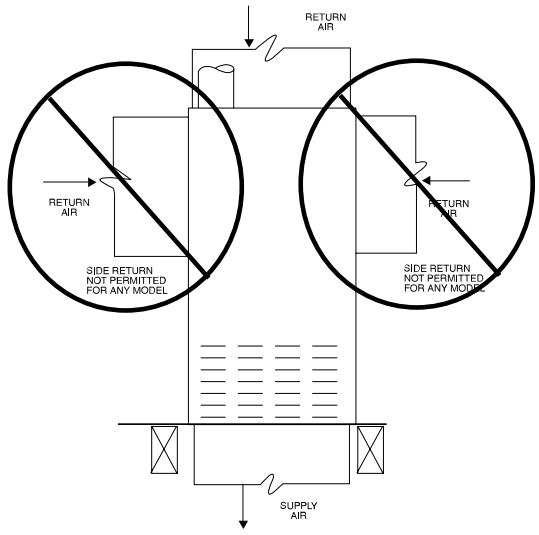

A190365

Fig. 19 – Downflow Return Air Configurations and Restrictions

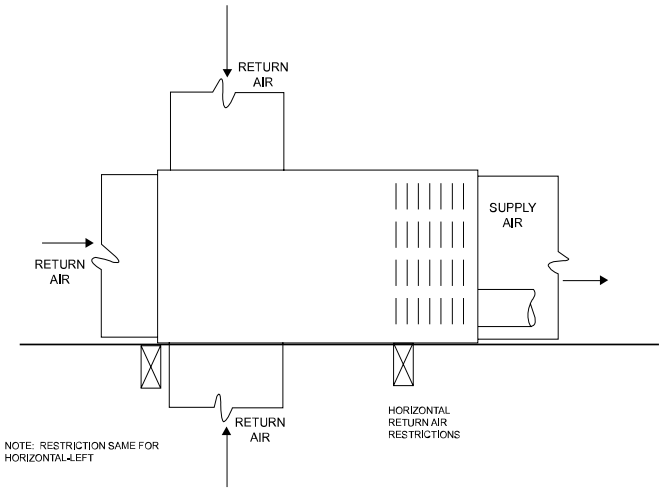

A190366

Fig. 20 – Horizontal Return Air Configurations and Restrictions

GAS PIPING

⚠ WARNING

FIRE OR EXPLOSION HAZARD

Failure to follow this warning could result in personal injury, death, and/or property damage.

Never purge a gas line into a combustion chamber. Never test for gas leaks with an open flame. Use a commercially available soap solution made specifically for the detection of leaks to check all connections.

⚠ WARNING

FIRE OR EXPLOSION HAZARD

Failure to follow this warning could result in personal injury, death, and/or property damage.

Use proper length of pipe to avoid stress on gas control assembly and a gas leak.

⚠ CAUTION

FURNACE OVERHEAT HAZARD

Failure to follow this caution may result in property damage.

Connect gas pipe to gas valve using a backup wrench to avoid damaging gas controls and burner misalignment.

⚠ WARNING

FIRE OR EXPLOSION HAZARD

Failure to follow this warning could result in personal injury, death, and/or property damage.

If local codes allow the use of a flexible gas appliance connector, always use a new listed connector. Do not use a connector which has previously served another gas appliance. Black iron pipe shall be installed at the furnace gas control valve and extend a minimum of 2 in.(51 mm) outside the furnace.

Gas piping must be installed in accordance with national and local codes. Refer to current edition of NFGC.

Installations must be made in accordance with all authorities having jurisdiction. If possible, the gas supply line should be a separate line running directly from meter to furnace.

NOTE: In the state of Massachusetts:

1. Gas supply connections MUST be performed by a licensed plumber or gas fitter.
2. When flexible connectors are used, the maximum length shall not exceed 36 inches (915 mm).
3. When lever handle type manual equipment shutoff valves are used, they shall be T-handle valves.
4. The use of copper tubing for gas piping is NOT approved by the state of Massachusetts.

Refer to Table 5 for recommended gas pipe sizing. Risers must be used to connect to furnace and to meter. Support all gas piping with appropriate straps, hangers, etc. Use a minimum of 1 hanger every 6 ft. (2 M). Joint compound (pipe dope) should be applied sparingly and only to male threads of joints. Pipe dope must be resistant to the action of propane gas.

Table 5 – Maximum Capacity of Pipe*

NOMINAL IRON PIPE	INTERNAL DIAMETER	LENGTH OF PIPE - FT. (M)				
SIZE IN. (mm)	In. (mm)	10	20	30	40	50
1/2 (13)	0.622 (16)	175 (53)	120 (37)	97 (30)	82 (25)	73 (22)
3/4 (19)	0.824 (21)	360 (110)	250 (76)	200 (61)	170 (52)	151 (46)
1 (25)	1.049 (27)	680 (207)	465 (142)	375 (114)	320 (98)	285 (87)
1-1/4 (32)	1.380 (35)	1400 (427)	950 (290)	770 (235)	660 (201)	580 (177)
1-1/2 (38)	1.610 (41)	2100 (640)	1460 (445)	1180 (360)	990 (301)	900 (274)

* Cubic ft. of natural gas per hr for gas pressures of 0.5 psig (14-in. w.c.) or less and a pressure drop of 0.5-in. w.c. (based on a 0.60 specific gravity gas). Ref: Chapter 6 current edition of ANSI Z223/NFPA 54.

An accessible manual equipment shutoff valve MUST be installed external to furnace casing and within 6' (2 M) of furnace. A 1/8" (3 mm) NPT plugged tapping, accessible for test gauge connection, MUST be installed immediately upstream of gas supply connection to furnace and downstream of manual equipment shutoff valve.

NOTE: The furnace gas control valve inlet pressure tap connection is suitable to use as test gauge connection providing test pressure DOES NOT exceed maximum 0.5 psig (14" w.c.) stated on gas control valve, see Fig. 21.

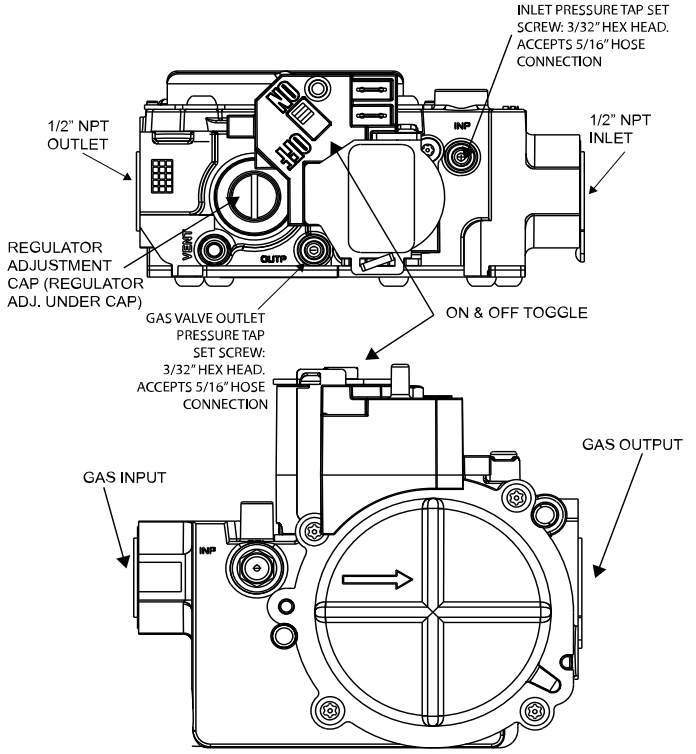

Fig. 21 – Gas Control Valve

Install a sediment trap in riser leading to furnace as shown in Fig. 22. Connect a capped nipple into lower end of tee. Capped nipple should extend below level of furnace gas controls. Place a ground joint union between furnace gas control valve and exterior manual equipment gas shutoff valve. A 1/8" (3 mm) NPT plugged tapping, accessible for test gauge connection, MUST be installed immediately upstream of gas supply connection to furnace and downstream of manual equipment shutoff valve.

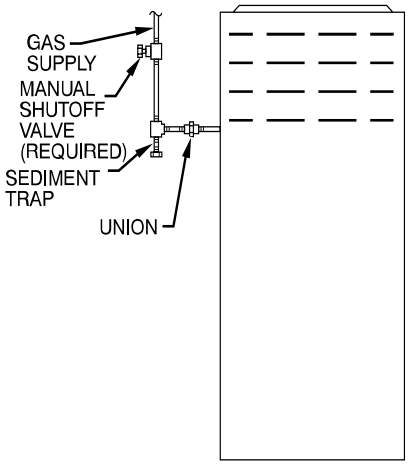

Fig. 22 – Typical Gas Pipe Arrangement

Piping should be pressure and leak tested in accordance with NFGC in the United States, local, and national plumbing and gas codes before the furnace has been connected. After all connections have been made, purge lines and check for leakage at furnace prior to operating furnace.

If pressure exceeds 0.5 psig (14" w.c.), gas supply pipe must be disconnected from furnace and capped before and during supply pipe pressure test. If test pressure is equal to or less than 0.5 psig (14" w.c.), turn off electric shutoff switch located on furnace gas control valve and accessible manual equipment shutoff valve before and during supply pipe pressure test. After all connections have been made, purge lines and check for leakage at furnace prior to operating furnace.

The gas supply pressure shall be within the maximum and minimum inlet supply pressures marked on the rating plate with the furnace burners ON and OFF.

ELECTRICAL CONNECTIONS

⚠ WARNING

ELECTRICAL SHOCK, FIRE OR EXPLOSION HAZARD

Failure to follow safety warnings could result in dangerous operation, serious injury, death or property damage.

Improper servicing could result in dangerous operation, serious injury, death or property damage.

- Before servicing, disconnect all electrical power to furnace.
- When servicing controls, label all wires prior to disconnecting. Reconnect wires correctly.
- Verify proper operation after servicing.
- Always reinstall access doors after completing service and maintenance.

⚠ WARNING

ELECTRICAL SHOCK HAZARD

Failure to follow this warning could result in personal injury or death.

Blower access panel door switch opens 115-V power to control. No component operation can occur. Do not bypass or close switch with panel removed.

See Fig. 23 for field wiring diagram showing typical field 115-V wiring. Check all factory and field electrical connections for tightness.

Field-supplied wiring shall conform with the limitations of 63°F (35°C) rise

⚠ WARNING

ELECTRICAL SHOCK AND FIRE HAZARD

Failure to follow this warning could result in personal injury, death, or property damage.

The cabinet MUST have an uninterrupted or unbroken ground according to current edition of NEC NFPA 70 or local codes to minimize personal injury if an electrical fault should occur. This may consist of electrical wire, conduit approved for electrical ground or a listed, grounded power cord (where permitted by local code) when installed in accordance with existing electrical codes. Refer to the power cord manufacturer's ratings for proper wire gauge. Do not use gas piping as an electrical ground.

⚠ CAUTION

FURNACE MAY NOT OPERATE

Failure to follow this caution may result in intermittent furnace operation.

Furnace control must be grounded for proper operation or else control will lock out. Control must remain grounded through green/yellow wire routed to gas valve and gas valve mounting bracket screw.

115-V Wiring

Verify that the voltage, frequency, and phase correspond to that specified on unit rating plate. Also, check to be sure that service provided by utility is sufficient to handle load imposed by this equipment. Refer to rating plate or Table 6 for equipment electrical specifications.

Make all electrical connections in accordance with current edition of National Electrical Code (NEC) NFPA 70 and any local codes or ordinances that might apply.

Use a separate, fused branch electrical circuit with a properly sized fuse or circuit breaker for this furnace. See Table 6 for wire size and fuse specifications. A readily accessible means of electrical disconnect must be located within sight of the furnace.

NOTE: Proper polarity must be maintained for 115-V wiring. If polarity is incorrect, control LED status indicator light will flash rapidly and Status code (10 . 1) is displayed. The furnace will NOT operate.

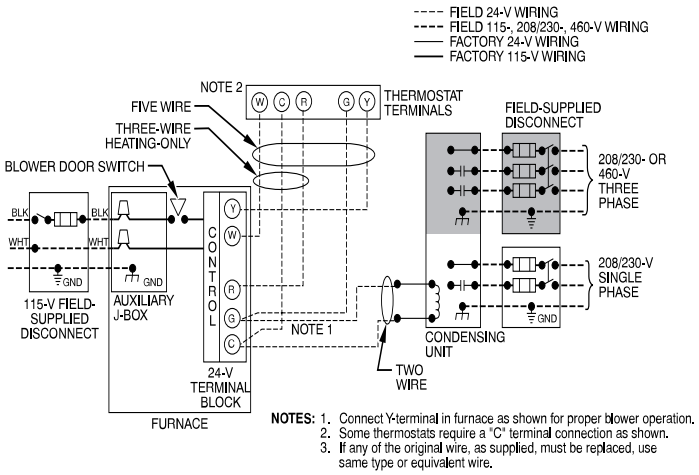

Fig. 23 – Heating and Cooling Application Wiring Diagram with 1-Stage Thermostat

Table 6 – Electrical Data

Unit Size	Volts-Hertz- Phase	Operating Voltage* Range		Maximum Unit Amps	Unit Ampacity†	Minimum Wire Size AWG	Maximum Wire Length‡ Ft (M)	Maximum Fuse or CKT BKR** Amps
		Maximum	Minimum					
0401712	115-60-1	127	104	8.6	11.2	14	33 (10.1)	15
0601716	115-60-1	127	104	11.0	14.2	14	26 (7.9)	15
0802120	115-60-1	127	104	14.2	18.2	12	31 (9.6)	20
1002120	115-60-1	127	104	14.2	18.2	12	31 (9.6)	20

*. Permissible limits of the voltage range at which the unit operates satisfactorily.
†. Unit ampacity = 125 percent of largest operating component's full load amps plus 100 percent of all other potential operating components' (EAC, humidifier, etc.) full load amps.
‡. Length shown is as measured one way along wire path between unit and service panel for maximum 2 percent voltage drop.
**. Time-delay type is recommended.

⚠ WARNING

FIRE HAZARD

Failure to follow this warning could result in personal injury, death, or property damage.

Do not connect aluminum wire between disconnect switch and furnace. Use only copper wire. See Fig. 24

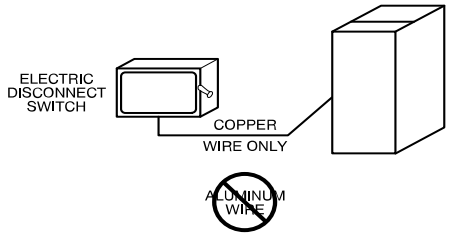

Fig. 24 – Field-Supplied External Electrical Box on Furnace Casing

J-Box Relocation

NOTE: If factory location of J-Box is acceptable, go to next section (ELECTRICAL CONNECTION TO J-BOX).

1. Remove and save two screws holding J-Box.

NOTE: The J-Box cover need not be removed from the J-Box in order to move the J-Box. Do NOT remove green ground screw inside J-Box.

2. Cut wire tie on loop in furnace wires attached to J-box.

3. Move J-Box to desired location.
4. Fasten J-Box to casing with two screws removed in Step 1.
5. Route J-Box wires within furnace away from sharp edges, rotating parts and hot surfaces.

Electrical Connection to J-Box

Electrical Box on Furnace Casing Side

WARNING

FIRE OR ELECTRICAL SHOCK HAZARD

Failure to follow this warning could result in personal injury, death, or property damage.

High voltage field connections must be located in J-Box with furnace, or in field supplied external disconnect mounted to furnace.

If field-supplied manual disconnect switch is to be mounted on furnace casing side, select a location where a drill or fastener cannot damage electrical or gas components.

1. Select and remove a hole knockout in the casing where the electrical box is to be installed.

NOTE: Check that duct on side of furnace will not interfere with installed electrical box.

2. Remove the desired electrical box hole knockout and position the hole in the electrical box over the hole in the furnace casing.
3. Fasten the electrical box to casing by driving two field supplied screws from inside electrical box into casing steel.
4. Remove and save two screws holding J-Box.
5. Pull furnace power wires out of 1/2" (12 mm) diameter hole in J-Box. Do not loosen wires from strain-relief wire-tie on outside of J-Box.
6. Route furnace power wires through holes in casing and electrical box and into electrical box, see Fig. 25.
7. Pull field power wires into electrical box.
8. Remove cover from furnace J-Box.
9. Route field ground wire through holes in electrical box and casing, and into furnace J-Box.
10. Reattach furnace J-Box to furnace casing with screws removed in Step 4.
11. Secure field ground wire to J-Box green ground screw.
12. Complete electrical box wiring and installation. Connect line voltage leads as shown in Fig. 23. Use best practices (NEC in U.S. for wire bushings, strain relief, etc.)
13. Reinstall cover to J-Box. Do not pinch wires between cover and bracket.

Power Cord Installation in Furnace J-Box

NOTE: Power cords must be able to handle the electrical requirements listed in Table 6. Refer to power cord manufacturer's listings.

1. Remove cover from J-Box.
2. Route listed power cord through 7/8" (22 mm) diameter hole in J-Box.
3. Secure power cord to J-Box bracket with a strain relief bushing or a connector approved for the type of cord used.
4. Secure field ground wire to green ground screw on J-Box bracket.
5. Connect line voltage leads as shown in Fig. 23.
6. Reinstall cover to J-Box. Do not pinch wires between cover and bracket.

BX Cable Installation in Furnace J-Box

1. Remove cover from J-Box.
2. Route BX cable into 7/8-inch diameter hole in J-Box.
3. Secure BX cable to J-Box bracket with connectors approved for the type of cable used.
4. Secure field ground wire to green ground screw on J-Box bracket.
5. Connect line voltage leads as shown in Fig. 23.
6. Reinstall cover to J-Box. Do not pinch wires between cover and bracket.

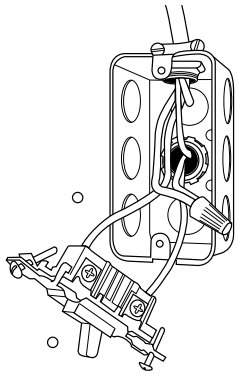

Fig. 25 – Field-Supplied Electrical Box on Furnace Casing A10141

24-V Wiring

Make field 24-V connections at the 24-V terminal strip, see Fig. 23. Connect terminal Y as shown in Fig. 36 for proper cooling operation. Use only AWG No. 18, color-coded, copper thermostat wire.

The 24-V circuit contains an automotive-type, 3-amp. fuse located on the control. Any direct shorts during installation, service, or maintenance could cause this fuse to blow. If fuse replacement is required, use ONLY a 3-amp. fuse of identical size.

ACCESSORIES

1. Electronic Air Cleaner (EAC)
   Connect an accessory Electronic Air Cleaner (if used) using 1/4" female quick connect terminals to the two male 1/4" quick-connect terminals on the control board marked EAC and NEUTRAL. The terminals are rated for 115 VAC, 1.0 amps maximum and are energized during blower motor operation, see Fig. 26.
2. Humidifier (HUM)
   Connect an accessory 24 VAC, 0.5 amp. maximum humidifier (if used) to the 1/4" male quick-connect HUM terminal and COM-24V screw terminal on the control board thermostat strip. The HUM terminal is energized when the pressure switch closes during a call for heat, see Fig. 26.

NOTE: DO NOT connect furnace control HUM terminal to HUM (humidifier) terminal on humidity sensing thermostat, zone controller or similar device. See humidity sensing thermostat, zone controller, thermostat, or controller manufacturer's instructions for proper connection.

NOTE: For 24-V & 115-V EAC or Humidifier Accessory details, see Accessory instructions.

VENTING

The furnace shall be connected to a listed factory built chimney or vent, or a clay-tile lined masonry or concrete chimney. Venting into an unlined masonry chimney or concrete chimney is prohibited.

When an existing Category I furnace is removed or replaced, the original venting system may no longer be sized to properly vent the attached appliances. An improperly sized Category I venting system could cause the formation of condensate in the furnace and vent, leakage of condensate and combustion products, and spillage of combustion products into the living space.

Vent system or vent connectors may need to be resized. Vent systems or vent connectors, must be sized to approach minimum size as determined using appropriate table found in the NFGC.

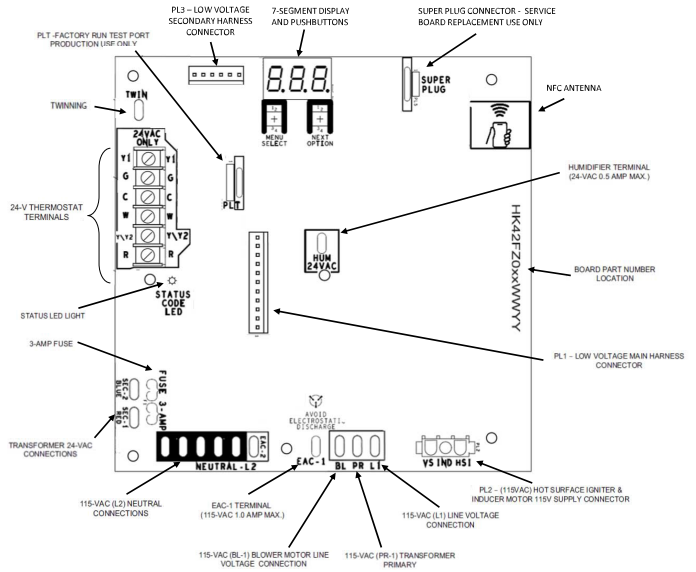

Fig. 26 – Furnace Control

General Venting Requirements

Follow all safety codes for proper vent sizing and installation requirements, including local building codes, the current edition of National Fuel Gas Code ANSI Z223.1/NFPA 54 (NFGC), Parts 12 and 13, the local building codes, and furnace and vent manufacturers' instructions.

These furnaces are design-certified as Category I furnaces in accordance with current edition of ANSI Z21.47/CSA 2.3 and operate with a non-positive vent static pressure to minimize the potential for vent gas leakage. Category I furnaces operate with a flue loss not less than 17 percent to minimize the potential for condensation in the venting system. These furnaces are approved for common venting and multistory venting with other fan assisted or draft hood equipped appliances in accordance with the NFGC, the local building codes, and furnace and vent manufacturers' instructions. The following information and warning must be considered in addition to the requirements defined in the NFGC.

1. If a vent (common or dedicated) becomes blocked, the furnace will be shut off by the draft safeguard switch located on the vent elbow.
2. Do not vent this Category I furnace into a single-wall dedicated or common vent. The dedicated or common vent is considered to be the vertical portion of the vent system that terminates outdoors.
3. Vent connectors serving Category I furnaces shall not be connected into any portion of a mechanical draft system operating under positive pressure.
4. Do not vent this appliance with any solid fuel burning appliance.
5. Category I furnaces must be vented vertically or nearly vertically unless equipped with a listed power venter.
6. Do not vent this appliance into an unlined masonry chimney. Refer to Chimney Inspection Chart, Fig. 27.

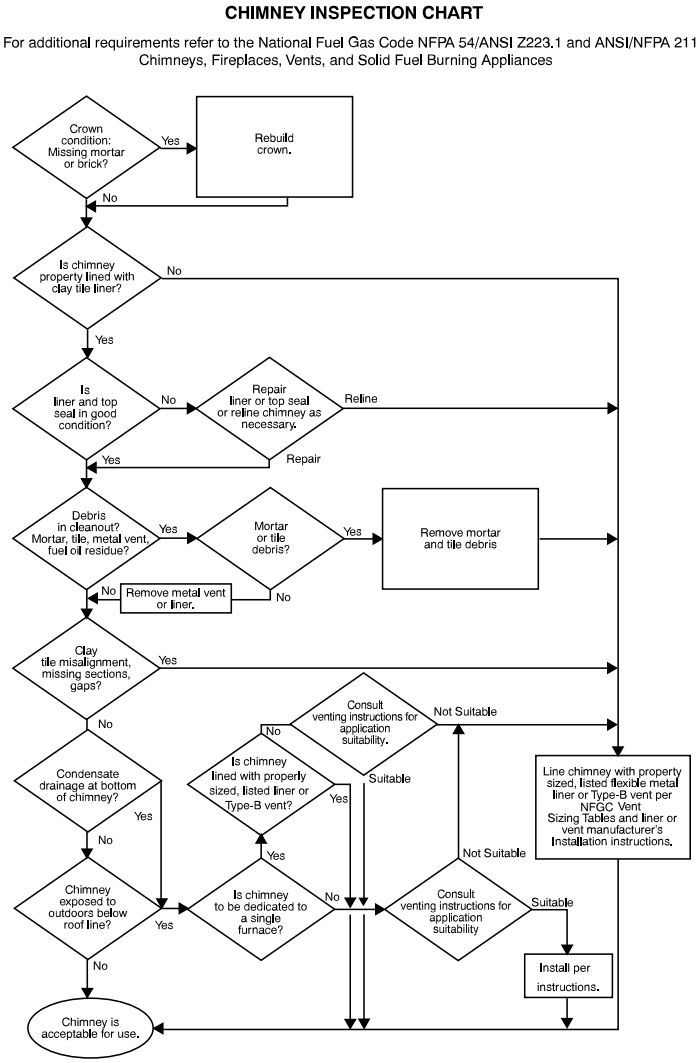

Fig. 27 – Chimney Inspection Chart

Masonry Chimney Requirements

If a clay tile-lined masonry chimney is being used and it is exposed to the outdoors below the roof line, relining might be required. Chimneys shall conform to the Standard for Chimneys, Fireplaces, Vents, and Solid Fuel Burning Appliances current edition of ANSI/NFPA 211 and must be in good condition.

USA - Refer to Sections 13.1.8 and 13.2.20 of the current edition of NFGC NFPA54/ANSI Z223.1 or the authority having jurisdiction to determine whether relining is required. If relining is required, use a properly sized listed metal liner, Type-B vent, or a listed alternative venting design.

NOTE: See the current edition of NFPA54/ANSI Z223.1, 13.1.8 and 13.2.20 regarding alternative venting design and the Exception.

This furnace is permitted to be vented into a clay tile-lined masonry chimney that is exposed to the outdoors below the roof line, provided:

⚠ WARNING

CARBON MONOXIDE POISONING HAZARD

Failure to follow the steps outlined below for each appliance connected to the venting system being placed into operation could result in carbon monoxide poisoning or death. The following steps shall be followed for each appliance connected to the venting system being placed into operation, while all other appliances connected to the venting system are not in operation:

- Seal any unused openings in venting system.
- Inspect the venting system for proper size and horizontal pitch, as required in the current edition of National Fuel Gas Code, ANSI Z223.1/NFPA 54 and these instructions. Determine that there is no blockage or restriction, leakage, corrosion and other deficiencies, which could cause an unsafe condition.
- As far as practical, close all building doors and windows and all doors between the space in which the appliance(s) connected to the venting system are located and other spaces of the building.
- Close fireplace dampers.
- Turn on clothes dryers and any appliance not connected to the venting system. Turn on any exhaust fans, such as range hoods and bathroom exhausts, so they are operating at maximum speed. Do not operate a summer exhaust fan.
- Follow the lighting instructions. Place the appliance being inspected into operation. Adjust the thermostat so appliance is operating continuously.
- Test for spillage from draft hood equipped appliances at the draft hood relief opening after 5 minutes of main burner operation. Use the flame of a match or candle.
- If improper venting is observed during any of the above tests, the venting system must be corrected in accordance with the current edition of National Fuel Gas Code, ANSI Z223.1/NFPA 54.
- After it has been determined that each appliance connected to the venting system properly vents when tested as outlined above, return doors, windows, exhaust fans, fireplace dampers and any other gas-fired burning appliance to their previous conditions of use.

1. Vent connector is Type-B double-wall, and
2. This furnace is common vented with at least 1 draft hood equipped appliance, and
3. The combined appliance input rating is less than the maximum capacity given in Table 7, and
4. The input rating of each space heating appliance is greater than the minimum input rating given in Table 8 for the local 99% Winter Design Temperature. Chimneys having internal areas greater than 38 square inches require furnace input ratings greater than the input ratings of these furnaces. See footnote at bottom of Table 8, and
5. The authority having jurisdiction approves.

Exterior Masonry Chimney FAN + NAT Installations with Type-B Double Wall Vent Connectors ÓNFPA & AGA

Table 7 – Combined Appliance Maximum Input Rating in Thousands of BTUh per Hour

VENT HEIGHT FT. (M)	INTERNAL AREA OF CHIMNEY IN2 (MM2)			
	12 (7741)	19 (12258)	28 (18064)	38 (24516)
6 (1.8)	74	119	178	257
8 (2.4)	80	130	193	279
10 (3.0)	84	138	207	299
15 (4.5)	NR	152	233	334
20 (6.0)	NR	NR	250	368
30 (9.1)	NR	NR	NR	404

Table 8 – Minimum Allowable Input Rating of Space-Heating Appliance in Thousands of BTUh per Hour

VENT HEIGHT FT (M)	INTERNAL AREA OF CHIMNEY IN^2. (MM^2)			
	12 (7741)	19 (12258)	28 (18064)	38 (24516)
Local 99% Winter Design Temperature: 17 to 26°F* (-8 to -3°C)				
6 (1.8)	0	55	99	141
8 (2.4)	52	74	111	154
10 (3.0)	NR	90	125	169
15 (4.6)	NR	NR	167	212
20 (6.1)	NR	NR	212	258
30 (9.1)	NR	NR	NR	362
Local 99% Winter Design Temperature: 5 to 16°F* (-15 to -9°C)				
6 (1.8)	NR	78	121	166
8 (2.4)	NR	94	135	182
10 (3.0)	NR	111	149	198
15 (4.6)	NR	NR	193	247
20 (6.1)	NR	NR	NR	293
30 (9.1)	NR	NR	NR	377
Local 99% Winter Design Temperature: -10 to 4°F* (-23 to -16°C)				
6 (1.8)	NR	NR	145	196
8 (2.4)	NR	NR	159	213
10 (3.0)	NR	NR	175	231
15 (4.6)	NR	NR	NR	283
20 (6.1)	NR	NR	NR	333
30 (9.1)	NR	NR	NR	NR
Local 99% Winter Design Temperature: -11°F (-24°C) or lower				
Not recommended for any vent configuration.				

*. The 99.6% heating db temperatures table found in the Appendix of the Climatic Design Information chapter of the 2017 ASHRAE Fundamentals Handbook.

If all of these conditions cannot be met, an alternative venting design shall be used, a listed chimney-lining system, or a Type-B common vent.

Inspections before the sale and at the time of installation will determine the acceptability of the chimney or the need for repair and/or (re)lining. Refer to the Fig. 27 to perform a chimney inspection. If the inspection of a previously used tile-lined chimney:

a. Shows signs of vent gas condensation, the chimney should be relined in accordance with local codes and the authority having jurisdiction. The chimney should be relined with a listed metal liner, or a Type-B vent shall be used to reduce condensation. If a condensate drain is required by local code, refer to the current edition of NFGC NFPA54/ANSI Z223.1, Section 12.10 for additional information on condensate drains.

b. Indicates the chimney exceeds the maximum permissible size in the tables, the chimney should be rebuilt or relined to conform to

the requirements of the equipment being installed and the authority having jurisdiction.

A chimney without a clay tile liner, which is otherwise in good condition, shall be rebuilt to conform to current edition of ANSI/NFPA 211 or be lined with a UL listed metal liner or UL listed Type-B vent. Relining with a listed metal liner or Type-B vent is considered to be a vent-in-a-chase.

If a metal liner or Type-B vent is used to line a chimney, no other appliance shall be vented into the annular space between the chimney and the metal liner.

Appliance Application Requirements

Appliance operation has a significant impact on the performance of the venting system. If the appliances are sized, installed, adjusted, and operated properly, the venting system and/or the appliances should not suffer from condensation and corrosion. The venting system and all appliances shall be installed in accordance with applicable listings, standards, and codes.

The furnace should be sized to provide 100 percent of the design heating load requirement plus any margin that occurs because of furnace model size capacity increments. Heating load estimates can be made using approved methods available from Air Conditioning Contractors of America (Manual J); American Society of Heating, Refrigerating, and Air-Conditioning Engineers; or other approved engineering methods. Excessive oversizing of the furnace could cause the furnace and/or vent to fail prematurely. When a metal vent or metal liner is used, the vent must be in good condition and be installed in accordance with the vent manufacturer's instructions.

To prevent condensation in the furnace and vent system, the following precautions must be observed:

1. The return-air temperature must be at least 60°F (16°C) db except for brief periods of time during warm-up from setback at no lower than 55°F (13°C) db or during initial start-up from a standby condition.
2. Adjust the gas input rate per the installation instructions. Low gas input rate causes low vent gas temperatures, causing condensation and corrosion in the furnace and/or venting system.
3. Adjust the air temperature rise to the midpoint of the rise range or slightly above. Low air temperature rise can cause low vent gas temperature and potential for condensation problems.
4. Set the thermostat heat anticipator or cycle rate to reduce short cycling.

Air for combustion must not be contaminated by halogen compounds which include chlorides, fluorides, bromides, and iodides. These compounds are found in many common home products such as detergent, paint, glue, aerosol spray, bleach, cleaning solvent, salt, and air freshener, and can cause corrosion of furnaces and vents. Avoid using such products in the combustion-air supply. Furnace use during construction of the building could cause the furnace to be exposed to halogen compounds, causing premature failure of the furnace or venting system due to corrosion.

Vent dampers on any appliance connected to the common vent can cause condensation and corrosion in the venting system. Do not use vent dampers on appliances common vented with this furnace.

Additional Venting Requirements

A 4" (101 mm) round vent elbow is supplied with the furnace. A 5" (127 mm) or 6" (152 mm) vent connector may be required for some model furnaces. A field-supplied 4"–5" (101–127 mm) or 4"–6" (101 - 152 mm) sheet metal increaser fitting is required when 5" (127 mm) or 6" (152 mm) vent connector is used. See Fig. 28 - Fig. 33 Venting Orientation for approved vent configurations.

NOTE: Vent connector length for connector sizing starts at furnace vent elbow. The 4" vent elbow is shipped for upflow configuration and may be rotated for other positions. Remove the 3 screws that secure vent elbow to furnace, rotate furnace vent elbow to position desired, reinstall screws. The factory-supplied vent elbow does NOT count as part of the number of vent connector elbows.

The vent connector can exit the furnace through one of two locations on the casing.

1. Attach the single wall vent connector to the furnace vent elbow, and fasten the vent connector to the vent elbow with at least two field-supplied, corrosion-resistant, sheet metal screws located 180° apart.

NOTE: An accessory flue extension is available to extend from the furnace elbow to outside the furnace casing. See Product Data for accessory listing. If flue extension is used, fasten the flue extension to the vent elbow with at least two field-supplied, corrosion-resistant, sheet metal screws located 180° apart. Fasten the vent connector to the flue extension with at least two field-supplied, corrosion resistant sheet metal screws located 180° apart.

2. Vent the furnace with the appropriate connector as shown in Fig. 28 - Fig. 33.
3. Determine the correct location of the knockout to be removed.
4. Use a hammer and screwdriver to strike a sharp blow between the tie points and work the slug back and forth until the slug breaks free.

⚠ CAUTION

CUT HAZARD

Failure to follow this caution may result in personal injury.

Sheet metal parts may have sharp edges or burrs. Use care and wear appropriate protective clothing, safety glasses and gloves when handling parts and servicing furnaces.

⚠ CAUTION

BURN HAZARD

Failure to follow this caution may cause personal injury.

Hot vent pipe is within reach of small children when installed in downflow position. See the following instruction.

An accessory Vent Guard Kit is REQUIRED for downflow applications where the vent exits through the lower portion of the furnace casing. See Fig. 32 and Product Data for accessory listing. Refer to the Vent Guard Kit Instructions for complete details.

The horizontal portion of the venting system shall slope upwards not less than 1/4-in. per linear ft. (21 mm/M) from the furnace to the vent and shall be rigidly supported every 5 ft. (2 M) or less with metal hangers or straps to ensure there is no movement after installation.

Sidewall Venting

This furnace is not approved for direct sidewall horizontal venting.

Per section 12.4.3 of the current edition of NFPA54/ANSI Z223.1, any listed mechanical venter may be used, when approved by the authority having jurisdiction.

Select the listed mechanical venter to match the BTUh input of the furnace being vented. Follow all manufacturer's installation requirements for venting and termination included with the listed mechanical venter.

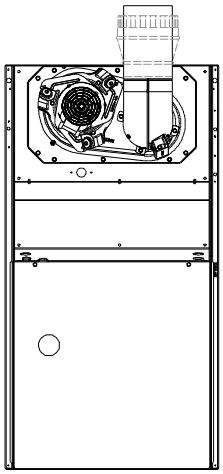

SEE NOTES: 1,2,4,7,8,9 on the page following these figures

Fig. 28 – Upflow Application-Vent Elbow Up A03208

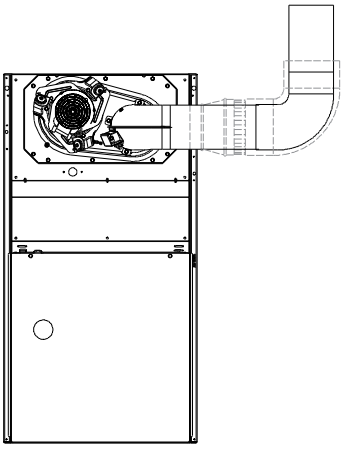

SEE NOTES: 1,2,3,4,7,8,9 on the pages following these figures

Fig. 29 – Upflow Application-Vent Elbow Right A03209

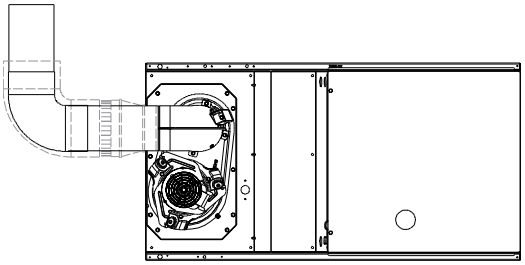

SEE NOTES: 1,2,4,7,8,9 on the page following these figures

Fig. 30 – Horizontal Left Application-Vent Elbow Left A03213

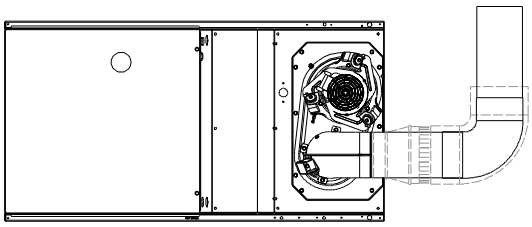

SEE NOTES: 1,2,4,7,8,9 on the page following these figures

Fig. 31 – Horizontal Right Application-Vent Elbow Right A03218

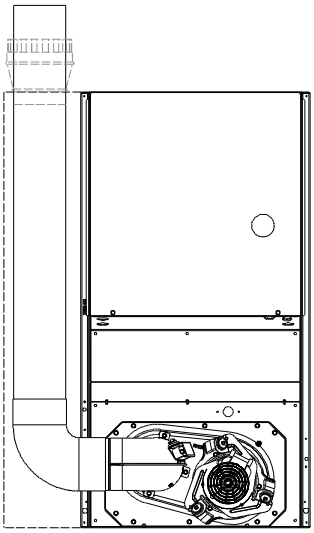

SEE NOTES: 1,2,4,5,6,7,8,9 on the page following these figures

Fig. 32 – Downflow Application-Vent Elbow Left then Up A03207

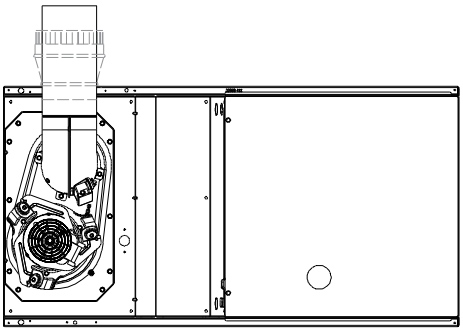

SEE NOTES: 1,2,4,5,7,8,9 on the page following these figures

Fig. 33 – Horizontal Left Application-Vent Elbow Up A03215

See NOTES following images.

Venting Notes for Fig. 28 - Fig. 33

1. For common vent, vent connector sizing and vent material: United States--use the NFGC.
2. Immediately increase to 5" (127 mm) or 6" (152 mm) vent connector outside furnace casing when 5" (127 mm) vent connector is required, refer to Note 1 above.
3. Side outlet vent for upflow and downflow installations must use Type B vent immediately after exiting the furnace, except when factory-authorized, Downflow Vent Guard Kit, is used in the downflow position. See Product Data for accessory listing.
4. Type-B vent where required, refer to Note 1 above.
5. Four-inch single-wall (26 ga. min.) vent must be used inside furnace casing and when the Downflow Vent Guard Kit is used external to the furnace. See Product Data for accessory listing.
6. Factory-authorized accessory Downflow Vent Guard Kit required in downflow installations with lower vent configuration. See Product Data for accessory listing.
7. Secure vent connector to furnace elbow with (2) corrosion-resistant sheet metal screws, spaced approximately 180° apart.
8. Secure all other single wall vent connector joints with (3) corrosion resistant screws spaced approximately 120° apart.
9. Secure Type-B vent connectors per vent connector manufacturer's recommendations.

AIR DELIVERY - CFM

Table 9 – Air Delivery - CFM (with filter)

Unit Size	Airflow Setting	Default Setting	External Static Pressure (IN.W.C.)									
			0.1	0.2	0.3	0.4	0.5	0.6	0.7	0.8	0.9	1
0401712	1	Const. Fan	610	525	440	365	300	230	165	-	-	-
	2		650	570	490	410	350	285	220	155	-	-
	3		705	630	555	480	415	355	295	235	170	-
	4		740	665	590	520	455	395	340	285	225	160
	5	Heating	815	735	670	600	540	475	420	370	315	260
	6		855	785	720	655	595	535	480	430	380	325
	7		915	850	785	725	665	605	550	495	450	405
	8		970	905	850	785	730	675	620	565	515	470
	9		1020	960	905	850	790	740	685	635	585	535
	10	Low Cooling	1080	1025	970	920	865	810	760	710	665	615
	11		1140	1085	1035	980	930	880	830	785	735	690
	12		1200	1150	1095	1045	1000	950	905	855	810	765
	13		1265	1215	1160	1115	1070	1025	980	935	890	845
	14		1325	1280	1230	1180	1135	1095	1050	1005	960	920
	15		1385	1335	1285	1245	1200	1160	1120	1075	1035	990
	16	High Cooling	1450	1405	1360	1315	1275	1235	1190	1155	1110	1070
	17		1520	1480	1435	1395	1355	1310	1275	1235	1195	1155
	18		1580	1540	1500	1455	1415	1375	1340	1300	1260	1225
0601716	1	Const. Fan	665	585	490	410	340	275	195	145	-	-
	2		755	680	600	520	445	385	325	255	190	140
	3		835	765	695	615	545	480	425	365	310	245
	4		905	840	775	710	635	570	515	460	405	355
	5		1000	935	875	815	750	690	620	570	520	470
	6		1050	995	935	880	820	755	700	645	595	550
	7	Heating	1130	1075	1020	970	915	855	800	745	690	645
	8		1200	1150	1100	1050	1000	945	890	840	785	735
	9		1285	1240	1190	1145	1095	1050	1000	945	895	850
	10	Low Cooling	1365	1320	1275	1230	1185	1140	1100	1050	995	955
	11		1395	1355	1310	1265	1220	1175	1135	1090	1035	995
	12		1455	1415	1370	1330	1285	1245	1200	1160	1115	1070
	13		1545	1500	1465	1420	1380	1340	1305	1265	1225	1180
	14		1615	1580	1540	1500	1465	1425	1390	1350	1315	1275
	15		1695	1660	1625	1585	1550	1515	1480	1445	1405	1375
	16	High Cooling	1775	1740	1705	1670	1635	1600	1570	1535	1500	1470
	17		1860	1825	1795	1760	1730	1695	1665	1635	1605	1575
	18		1970	1940	1910	1880	1845	1815	1780	1740	1695	1650
0802120	1	Const. Fan	745	630	520	420	330	240	155	-	-	-
	2		825	725	620	520	435	355	270	195	-	-
	3		925	835	740	650	560	485	415	340	260	195
	4		995	910	825	735	650	570	500	430	360	285
	5		1095	1015	935	855	770	695	620	555	495	430
	6		1210	1135	1065	990	915	840	770	705	635	580
	7		1290	1220	1150	1080	1010	940	875	810	740	685
	8		1390	1330	1265	1195	1130	1065	1000	940	875	815
	9	Heating	1505	1450	1390	1325	1270	1205	1145	1085	1025	970
	10	Low Cooling	1595	1540	1480	1425	1370	1310	1250	1195	1140	1085
	11		1700	1645	1595	1540	1485	1435	1380	1325	1270	1220
	12		1795	1750	1700	1650	1595	1545	1495	1445	1395	1340
	13		1910	1865	1815	1770	1720	1675	1625	1580	1530	1485
	14		2020	1975	1930	1885	1840	1795	1750	1705	1660	1615
	15		2125	2080	2040	2000	1955	1915	1870	1830	1785	1745
	16	High Cooling	2240	2200	2160	2120	2080	2040	2000	1965	1925	1885
	17		2335	2295	2260	2220	2185	2150	2110	2075	2040	2005
	18		2510	2475	2440	2400	2365	2325	2285	2230	2185	2130

Manufacturer reserves the right to change, at any time, specifications and designs without notice and without obligations.

Table 9 – Air Delivery - CFM (with filter) (Continued)

Unit Size	Airflow Setting	Default Setting	External Static Pressure (IN.W.C.)									
			0.1	0.2	0.3	0.4	0.5	0.6	0.7	0.8	0.9	1
1002120	1	Const. Fan	865	745	640	525	425	315	170	-	-	-
	2		935	825	725	620	515	420	315	175	-	-
	3		1035	935	830	745	640	550	460	365	235	140
	4		1095	1000	900	815	725	630	545	455	360	240
	5		1205	1125	1035	945	870	780	695	620	540	455
	6		1290	1210	1125	1040	965	890	805	725	645	570
	7		1385	1310	1235	1155	1080	1010	940	860	785	710
	8		1495	1430	1360	1285	1215	1145	1080	1015	945	870
	9		1585	1520	1455	1385	1315	1250	1185	1125	1065	995
	10	Low Cooling	1685	1625	1565	1505	1435	1370	1305	1250	1190	1135
	11		1785	1725	1665	1605	1550	1485	1425	1365	1310	1255
	12		1820	1765	1710	1655	1590	1530	1470	1410	1355	1305
	13	Heating	1880	1830	1775	1720	1665	1610	1550	1490	1435	1385
	14		1985	1930	1880	1830	1780	1730	1675	1620	1565	1515
	15		2090	2040	1990	1940	1895	1845	1795	1745	1690	1645
	16		2185	2140	2095	2045	2000	1960	1915	1865	1820	1770
	17	High Cooling	2285	2240	2195	2150	2110	2065	2025	1980	1940	1895
	18		2465	2420	2375	2335	2290	2235	2180	2125	2060	2000

NOTE:

1.A filter is required for each return-air inlet. Airflow performance included 3/4-in. (19 mm) washable filter media such as contained in a factory - authorized accessory filter rack. See accessory list. To determine airflow performance without this filter, assume an additional 0.1 in. w.c. available external static pressure.

2.Adjust the blower airflow settings as necessary for the proper air temperature rise for each installation.

3.Airflows over 1800 CFM require bottom return, two-side return, or bottom and side return. A minimum filter size of 20” x 25” (508 x 635 mm) is required.

4.For upflow applications, air entering from one side into both the side of the furnace and a return air base counts as a side and bottom return

5..The -- entry indicates unstable operating conditions.

Table 10 – Airflow Settings

	Default Airflow Settings*			Designated Airflow Settings	
Unit Size	Heating	High Cooling	Low Cooling	Heating	Constant Fan
0401712	5	16	10	2-12	1-7
0601716	7	16	10	3-11	1-8
0802120	9	16	10	5-14	1-8
1002120	13	17	10	7-15	1-7

*. Setting #1 is the default setting for Constant Fan.

FURNACE CONTROL PROGRAMMING AND NAVIGATION

On-Board Control Method

⚠ WARNING

ELECTRICAL SHOCK HAZARD

Failure to follow this warning could result in personal injury, or death.

Blower access door switch removes 115-V power to control. No component operation can occur unless switch is closed. Caution must be taken when manually closing this switch for service purposes.

Do not tape or permanently allow the door switch to be bypassed. Temporarily depress the door switch with one hand while accessing the service buttons with your other hand. Do not touch uninsulated electrical components.

This furnace model is equipped with an on-board 3-digit LCD display with pushbutton navigation for the adjustment of operating parameters, diagnostics, and service. The control board must be powered to use the display and pushbuttons. Upon startup, the control will alternate displaying the Model Program Number (PrG) and Software Version (uEr). The control board has been programmed at the factory with a Model Program Number specific to the furnace product number. The correct Model Program Number is shown on the furnace rating plate.

The system’s status is displayed after startup or after no control buttons have been pressed for 60 seconds. Status Code LED will also be illuminated or blinking when displaying the system status. The codes which indicate the current operating mode of the system as shown in Table 11.

Table 11 – System Status Display Codes

Display	Operating Mode	Notes
idL	Idle/Standby Mode	No active demands
Ht	Heating Mode	Gas Heating active
CL1	Low Cooling Mode	Low Cooling or Heat Pump active
CL2	High Cooling Mode	High Cooling or Heat Pump active
HPd	Heat Pump Defrost Mode	Gas Heating cycle active during Heat Pump Defrost cycle
CFn	Continuous Fan Mode	Continuous Fan active
bLr	Secondary Unit Operating Blower	Only used when control is the secondary furnace of a twinned furnace system and primary furnace is active
##.#	Active Status Code	See Fig. 35 or Furnace Service Label for codes

Table 12 – Main Menu Options

Display	Operating Mode	Use
FLt	Last 7 faults that occurred	Faults code menu stores the 7 latest faults in memory. If no faults, None (non) will be displayed. To clear fault history, scroll to Clear (CLr) and press MENU/SELECT. See Fig. 35 or Furnace Service Label for codes.
Ht	Heating blower speed	Heating Airflow Setting. Adjust higher to lower Temp. Rise; lower to increase Temp. Rise. See Start-Up Procedures. See Fig. 34 for allowable selections and Table 9 for airflows.
CL1	Low Cooling Mode	Low Cooling and High Heat Pump speed.
CL2	High Cooling Mode	High Cooling and High Heat Pump speed.
CFn	Constant Fan blower speed	Constant Fan Airflow Setting. See Fig. 34 for allowable selections and Table 9for airflows.
Hod	Heat OFF Delay	Value shown in seconds. Shorter delays may leave unused heat in ducts. Longer delays may blow cold air at the end of heating demands.
Cod	Cool OFF Delay	Value shown in seconds. Shorter delays may leave unused energy in furnace coil. Longer delays may re-evaporate condensate.
dir	Direction	Adjusts display orientation 180 degrees between up flow (UPF) and down flow (dnF).
tnn	Twinning	Primary (Pr1) or Secondary (SEC) furnace selection. Adjust only if furnace is used in a twinned furnace system. Use of accessory kit required. See kit instructions.
inF	Program # and Software	Do NOT program the control board with a Model Program Number different than what is specified on the rating plate. Alternates displaying the saved Model Program Number (PrG) and Software Version (uEr).
Ct	Component Test	Use to validate components are functioning as intended. See Component Self-Test instructions in the Start-Up Procedures section.
rSt	Reset	Reset settings to Factory Default by selecting Yes (YES).

The Main Menu provides access to operating parameters of the furnace control including airflows as well as other diagnostics. See Fig. 26 for the location of the pushbuttons. Scroll through Main Menu by pressing MENU/SELECT button. Press NEXT/OPTION to display the current setting of the parameter (value will flash). Additional presses will scroll through setting options. Press MENU/SELECT button to save a new setting and return to the Main Menu. The display will flash three times to confirm a new setting selection has been saved. Fig. 34 shows the flow of the menu and settings. Table 12 provides additional information on parameter adjustment and applicability.

NFC and Supported App Method

This furnace control board is also equipped with NFC (Near Field Communication) technology which allows the adjustment of operating parameters, diagnostics, and service via a field-supplied mobile device with NFC capability and supported mobile app. Remove 115-V power from the furnace control board to use this method. See Fig. 26 for the location of the NFC antenna. Additional instructions and help may be available through the supported mobile app.

Scan the mobile app QR Code on page 1 of this manual for more information and a link to download the mobile app.

Control Board Replacement

If the control board must be replaced, the new board must be programmed with the correct Model Program Number before the furnace will operate. Do NOT program the control board with a Model Program Number different than what is specified on the rating plate. The control may be programmed by either of these approved methods:

1. Use the supported mobile app to flash the model program onto the board using Near Field Communication (NFC). Scan the QR code on page 1 of this manual for more information and a link to download the mobile app.
2. Use the correct Super Plug (available from distributor / replacement component) for the control board to copy the correct model program onto the new board.

Further details and instructions for these programming methods are provided with the replacement control board.

⚠ CAUTION

FURNACE OVERHEATING HAZARD

Failure to follow this caution could result in reduced furnace life.

Do NOT program the control board with a Model Program Number different than what is specified on the rating plate. Parameter options will not match design values.

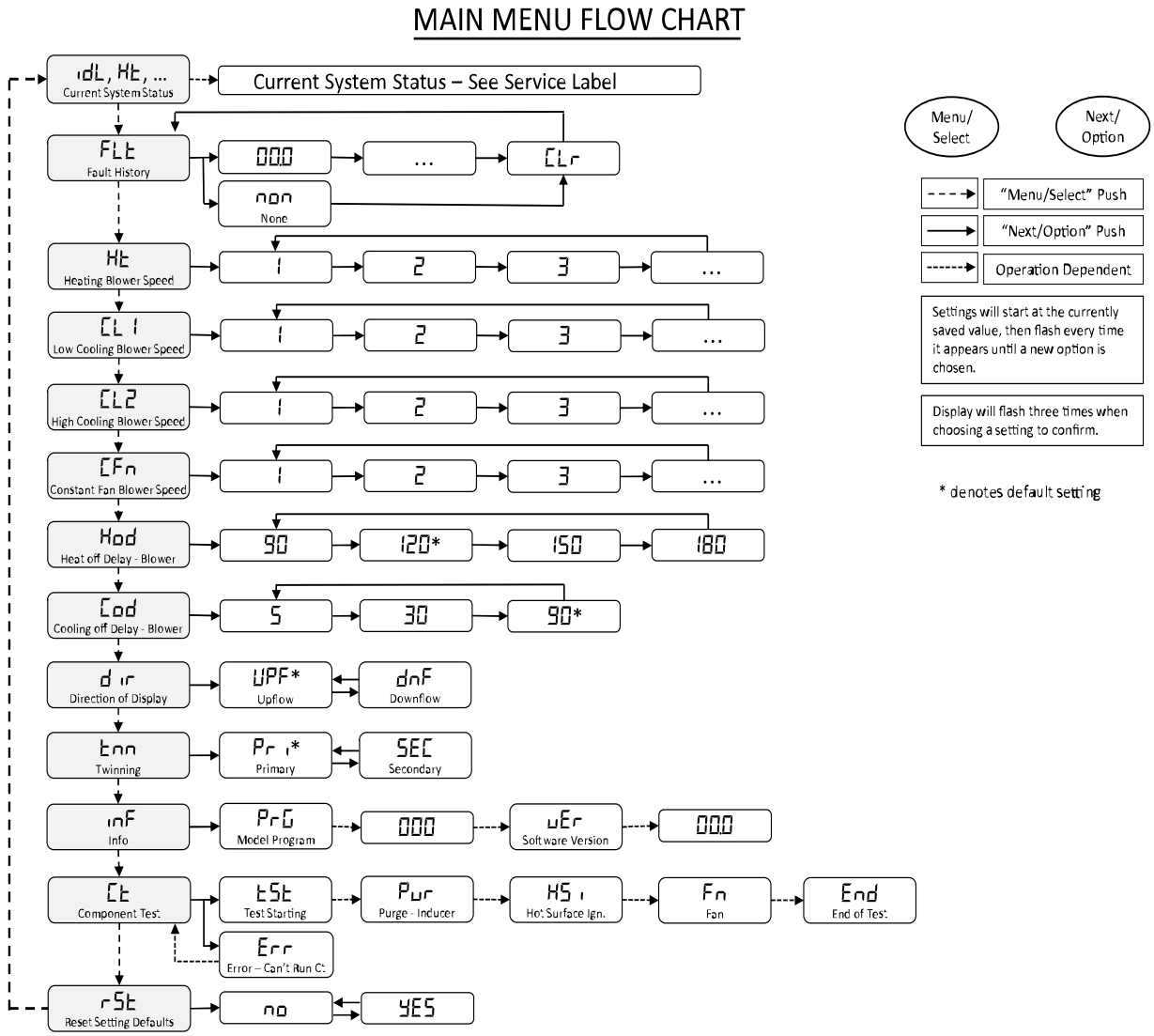

A221015

Fig. 34 – 3 Digit Display Flow Chart

SERVICE LABEL

STATUS CODE TABLE

Scan QR code or reference troubleshooting guide in installation manual.

The major status code is displayed in the first 2 digits of the display. The minor status code is displayed in the third digit. The major status code is also displayed on the LED indicator through the door with the first digit being the number of short flashes and the second digit being the number of long flashes.

Major	Minor	Description
10	1	L1 polarity fault
Rapid flash LED		
12	1	W on at power up or within 5 minutes
13	1	Limit Lockout – switch opened in the limit circuit
14	1	Ignition Lockout after 4 consecutive ignition tries
	2	Flame lost 3 times after 70s of heating
	3	7 loss of flame events during a heat request or three 34.4 faults during heat request
	4	Lockout – 7 loss of pressure events during a heat request
21	1	24VAC sensed on gas valve when shouldn't be
22	1	False flame
23	3	Pressure detected over 0.15" (~0.65Vdc signal to gnd, 0" = ~0.500Vdc)
24	1	Fuse fault
25	1	No program info in micro, no heating operation.
	2	Corrupted program file, reprogram control using service app or super plug (supplied separately), no heating operation.
25	3	Twinned units are not identical, Program #s do not match. Ensure furnaces are identical (same program #) when twinning. Main unit will not operate heating.
	4	Main program invalid. Using backup program to operate. Reprogram control to correct issue. Control still operates normally.
	5	Installer settings corrupted. Try reselecting installer settings, or reprogram control. Control will operate using default installer settings.
	6	Wrong program for control used - reprogram control so program matches control used. No heating operation.
		If program in furnace control is missing, not recognized or corrupted. Reprogram control with correct program # as listed on the rating plate. Replace control if issue remains.
26	1	Lockout - BTS open - power reset only
27	1	Program in super plug is missing, not recognized, or corrupted. Remove super plug then retry. If code 27 remains, try a different super plug. If still fails, replace control.
	2	
	3	
31	4	Loss of pressure before blower comes on
31	5	Loss of pressure after blower comes on
34	1	Ignition fault - during four consecutive ignition trials.
	2	After successful ignition (flame proven) flame loss before heating blower on delay.
	3	After successful ignition (flame proven) flame loss after heating blower on delay.
	4	Flame lost while operating at reduced inducer pressure from previous 34.3 fault condition.
42	1	No RPM feedback at start-up or before ignition proved.
	2	No RPM feedback after ignition is proved.
	3	Exceeding Inducer RPM limit (model specific).
45	1	Control failure – flame circuit fault, memory mismatch or sequence error.
	2	Control failure – gas valve relay will not close.
	3	Control failure – EEPROM memory issue.
		For code 45, cycle power, if code 45 repeats, replace control.
46	1	Momentary loss of power

MENU NAVIGATION

Scroll through main menu by pressing the MENU/SELECT button. Press NEXT/OPTION button to view current setting (will flash on display) and to scroll through setting options. Press MENU/SELECT button to save new setting and return to main menu. The display will flash to confirm setting selection before returning to the main menu.

SYSTEM STATUS

DISPLAY	DESCRIPTION
idL	Idle / Standby Mode
Ht	Heating Mode
CL1	Low Cooling Mode
CL2	High Cooling Mode
HPd	Heat Pump Defrost Mode
CFn	Continuous Fan Mode
bLr	Secondary Unit Operating Blower during CFn, CL, or Ht
##.#	Active Status Code

COMPONENT TEST

To initiate the component test sequence, the control must be in (idL) mode. No thermostat demands (W, Y, G). Select component test (Ct) from menu select buttons to start the component test sequence. Once initiated the furnace control will perform the following sequence:

1. Pur- Inducer ON (remains ON for test).
2. HS 1- After waiting 10s, HSI ON for 15 seconds.
3. Fn- After HSI, then Blower ON for 10 seconds.
4. End- After Blower, Inducer ON for 10 more seconds.

The test ends.

MAIN MENU

DISPLAY	DESCRIPTION
idL,Ht,...	Current System Status
FLt	Last 7 faults that occured
Ht	Heating Blower speed
CL1	Low Cooling and Low Heat Pump speed
CL2	High Cooling and High Heat Pump speed
CFn	Continuous Fan speed
Hod	Heat OFF delay
Cod	Cool OFF delay
dir	Orientation Upflow or Downflow
tnn	Twinning Main or Secondary
inF	Program # and Software version
Ct	Component test
rSt	Reset All Installer Settings to Factory Defaults

All copyrighted materials used herein are the property of their respective owners.

SERVICE LABEL

350900-201 REV-

A240391

Fig. 35 – Service Label

START-UP, ADJUSTMENT, AND SAFETY CHECK

General

WARNING

FIRE HAZARD

Failure to follow this warning could result in personal injury, death and/or property damage.

This furnace is equipped with manual reset limit switches in the gas control area. The switches open and shut off power to the gas valve if a flame rollout or overheating condition occurs in the gas control area. DO NOT bypass the switches. Correct inadequate combustion air supply problem before resetting the switches.

CAUTION

CUT HAZARD

Failure to follow this caution may result in personal injury.

Sheet metal parts may have sharp edges or burrs. Use care and wear appropriate protective clothing, safety glasses and gloves when handling parts and servicing furnaces.

1. Maintain 115-V wiring and ground. Improper polarity will result in rapid flashing control diagnostic light and Status code (10 . 1) is displayed. The furnace will NOT operate.
2. Make thermostat wire connections at the 24-V terminal block on the furnace control. Failure to make proper connections will result in improper operation, see Fig. 23.
3. Gas supply pressure to the furnace must be greater than 4.5-in. w.c. (0.16 psig) but not exceed 14-in. w.c. (0.5 psig).
4. Check all manual-reset switches for continuity.
5. Install blower compartment door. Door must be in place to operate furnace.
6. Replace outer door.

Start-Up Procedures

WARNING

FIRE AND EXPLOSION HAZARD

Failure to follow this warning could cause personal injury, death and/or property damage.

Never test for gas leaks with an open flame. Use a commercially available soap solution made specifically for the detection of leaks to check all connections. A fire or explosion may result causing property damage, personal injury or loss of life.

1. Purge gas lines after all connections have been made.
2. Check gas lines for leaks.

WARNING

ELECTRICAL SHOCK HAZARD

Failure to follow this warning could result in personal injury, or death.

Blower access door switch opens 115-V power to control. No component operation can occur unless switch is closed. Caution must be taken. Do not touch uninsulated electrical components when manually closing this switch. for service purposes.

3. To Begin Component Self-Test
   a. Remove thermostat wire connected to R terminal on control to ensure no thermostat demands are present.
   b. Temporarily depress blower door switch to power the control board.

CAUTION

SHOCK HAZARD

Failure to follow this caution could result in personal injury.

Do not tape or permanently allow the door switch to be bypassed. Temporarily depress the door switch with one hand while accessing the service buttons with your other hand. Do not touch uninsulated electrical components.

   c. To initiate the component test sequence, the control must be in (idL) mode. no thermostat demands (W, Y, G). Select component test (Ct) from menu select buttons to start the component test sequence. Once initiated the furnace control will perform the test sequence as shown in Table 13. Once complete, connect thermostat wire to R terminal on control board and re-install blower door.
4. Operate furnace per instruction on door.
5. Verify furnace shut down by lowering thermostat setting below room temperature.
6. Verify furnace restarts by raising thermostat setting above room temperature.

Table 13 – Test Sequence

Display	Operating Mode	Function
tSt	Test	Confirms start of Component Test mode.
Pur	Purge	Inducer ON for 10 seconds before next stage. Inducer remains ON for test duration. Inducer will operate at 50% torque.
HS1	Hot Surface Igniter	Hot Surface Igniter ON for 15 seconds, then OFF.
Fn	Fan	Blower ON at 50% torque for 10 seconds, then OFF.
End	End Test	All component OFF except for Inducer for 10 seconds. Display returns to idL. If a thermostat input is detected or fault condition activates during the test sequence, control will abort and display End for 6 seconds.
Err	Error	Displayed if component test is not able start. Check for thermostat inputs or faults, and system status is Idle (idL).

WIRING DIAGRAM

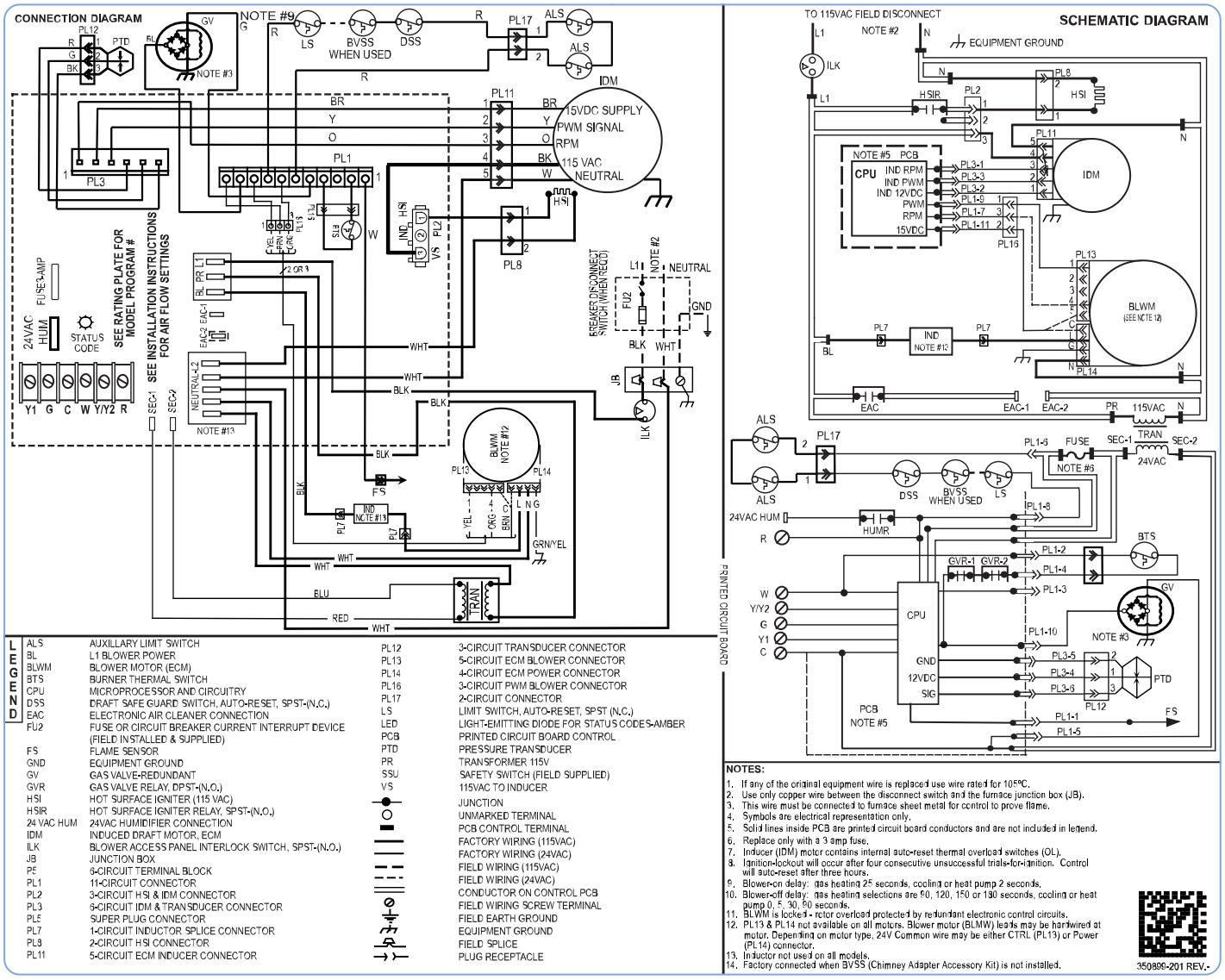

A240392

Fig. 36 – Wiring Diagram

Adjustments

⚠ WARNING

FIRE HAZARD

Failure to follow this warning could result in injury, death and/or property damage.

DO NOT bottom out gas valve regulator adjusting screw. This can result in unregulated gas valve outlet pressure and result in excess overfire and heat exchanger failures.

1. Determine the correct gas input rate. Refer to the unit rating plate. The input rating for altitudes above 2,000' (610 M) must be reduced by 2 percent for each 1,000' (305 M) above sea level. For installations below 2,000'. (610 M), refer to the unit rating plate. For installation above 2,000' (610 M), multiply the input on the rating plate by the derate multiplier in Table 14 for the correct input rate.

⚠ CAUTION

FURNACE DAMAGE HAZARD

Failure to follow this caution may result in reduced furnace life.

DO NOT redrill orifices. Improper drilling (burrs, out-of-round holes, etc.) can cause excessive burner noise and misdirection of inlet gas, see Fig. 37.

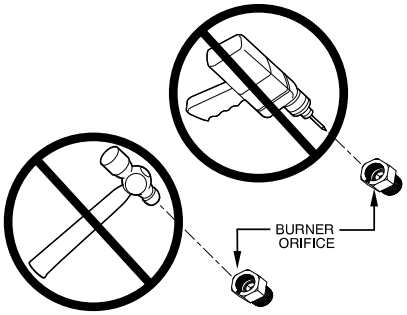

A180238

Fig. 37 – Orifice Hole

Table 14 – Altitude Derate Multiplier for U.S.A

ALTITUDE (FT. / M)	PERCENT OF DERATE	DERATE MULTIPLIER FACTOR*
0–2000 (0-610)	0	1.00
2001–3000 (610-914)	4-6	0.95
3001–4000 (914-1219)	6-8	0.93
4001–5000 (1219-1524)	8-10	0.91
5001–6000 (1525-1829)	10-12	0.89
6001–7000 (1829-2134)	12-14	0.87
7001–8000 (2134-2439)	14-16	0.85
8001–9000 (2439-2743)	16-18	0.83
9001–10000 (2744-3048)	18-20	0.81

*. Derate multiplier factors are based on midpoint altitude for altitude range

Furnace gas input rate on rating plate is for installations at altitudes up to 2,000 ft. (610 M). Furnace input rate must be within +/-2 percent of furnace rating plate input.

2. Determine the correct outlet gas pressure adjustment.
   a. Obtain average yearly gas heat value (at installed altitude) from local gas supplier.
   b. Obtain average yearly gas specific gravity from local gas supplier.
   c. Find closest natural gas heat value and specific gravity in Table 16 through Table 19.
   d. Follow heat value and specific gravity lines to point of intersection to find outlet pressure setting for proper operation.
3. Check Inlet Gas Pressure

The inlet gas pressure must be checked with the furnace operating. This is necessary to make sure the inlet gas pressure does not fall below the minimum pressure of 4.5" w.c.

   a. Make sure the gas supply is turned off to the furnace and at the electric switch on the gas valve
   b. Loosen set screw on inlet tower pressure tap no more than one full turn with a 3/32" hex wrench or remove the 1/8" NPT plug from the inlet pressure tap on the gas valve.
   c. Connect a manometer to the inlet pressure tap on gas valve.
   d. Turn on furnace power supply.
   e. Turn gas supply manual shutoff valve to ON position.
   f. Turn furnace gas valve switch to ON position.
   g. Jumper R and W thermostat connections at the furnace control board.
   h. When main burners ignite, confirm inlet gas pressure is between 4.5" w.c. (1125 Pa) and 13.6" w.c. (3388 Pa).
   i. Remove jumper across thermostat connections to terminate call for heat. Wait until the blower off delay is completed.
   j. Turn furnace gas valve electric switch to OFF position.
   k. Turn gas supply manual shutoff valve to OFF position.
   l. Turn off furnace power supply.
   m. Remove manometer from the inlet pressure tap of the gas valve.
   n. Tighten set screw on inlet tower pressure tap with 3/32" hex wrench, or if 1/8" NPT plug was removed, apply pipe dope sparingly to end of plug and reinstall in the gas valve

⚠ WARNING

FIRE HAZARD

Failure to follow this warning could result in personal injury, death, and/or property damage.

Inlet pressure tap set screw must be tightened and 1/8-in. NPT pipe plug must be installed to prevent gas leaks.

4. Adjust gas valve outlet pressure determined in Step 2 to obtain correct input rate.
   a. Turn gas valve ON/OFF switch to OFF.
   b. Loosen set screw on outlet tower pressure tap no more than one full turn with a 3/32" hex wrench, see Fig. 21.
   c. Connect a water column manometer or similar device to pressure tap on the gas valve.
   d. Turn gas valve ON/OFF switch to ON.
   e. Manually close blower door switch.
   f. Set thermostat to call for heat.
   g. Remove regulator seal cap and turn regulator adjusting screw counterclockwise (out) to decrease input rate of clockwise (in) to increase input rate.
   h. Install regulator seal cap.
   i. Leave manometer or similar device connected and proceed to next step.

NOTE: If orifice hole appears damaged or it is suspected to have been redrilled, check orifice hole with a numbered drill bit of correct size. Never redrill an orifice. A burr-free and properly sized orifice hole is essential for proper flame characteristics.

Table 15 – Gas Rate (Cu Ft./Hr.)

SECONDS FOR 1 REV	SIZE OF TEST DIAL			SECONDS FOR 1 REV	SIZE OF TEST DIAL		
	1 Cu Ft.	2 Cu Ft.	5 Cu Ft.		1 Cu Ft.	2 Cu Ft.	5 Cu Ft.
10	360	720	1800	**50**	72	144	360
11	327	655	1636	**51**	71	141	355
12	300	600	1500	**52**	69	138	346
13	277	555	1385	**53**	68	136	340
14	257	514	1286	**54**	67	133	333
15	240	480	1200	**55**	65	131	327
16	225	450	1125	**56**	64	129	321
17	212	424	1059	**57**	63	126	316
18	200	400	1000	**58**	62	124	310
19	189	379	947	**59**	61	122	305
20	180	360	900	**60**	60	120	300
21	171	343	857	**62**	58	116	290
22	164	327	818	**64**	56	112	281
23	157	313	783	**66**	54	109	273
24	150	300	750	**68**	53	106	265
25	144	288	720	**70**	51	103	257
26	138	277	692	**72**	50	100	250
27	133	267	667	**74**	48	97	243
28	129	257	643	**76**	47	95	237
29	124	248	621	**78**	46	92	231
30	120	240	600	**80**	45	90	225
31	116	232	581	**82**	44	88	220
32	113	225	563	**84**	43	86	214
33	109	218	545	**86**	42	84	209
34	106	212	529	**88**	41	82	205
35	103	206	514	**90**	40	80	200
36	100	200	500	**92**	39	78	196
37	97	195	486	**94**	38	76	192
38	95	189	474	**96**	38	75	188
39	92	185	462	**98**	37	74	184
40	90	180	450	**100**	36	72	180
41	88	176	439	**102**	35	71	178
42	86	172	429	**104**	35	69	173
43	84	167	419	**106**	34	68	170
44	82	164	409	**108**	33	67	167
45	80	160	400	**110**	33	65	164
46	78	157	391	**112**	32	64	161
47	76	153	383	**116**	31	62	155
48	75	150	375	**120**	30	60	150
49	73	147	367				

5. Verify natural gas input rate by clocking meter.

NOTE: Gas valve regulator adjustment cap must be in place for proper input to be clocked.

a. Turn off all other gas appliances and pilots served by the meter.
b. Run furnace for 3 minutes in heating operation.
c. Measure time (in seconds) for gas meter to complete 1 revolution and note reading. The 2 or 5 cubic feet dial provides a more accurate measurement of gas flow.
d. Refer to Table 15 for cubic ft. of gas per hr.
e. Multiply gas rate (cu ft./hr) by heating value (BTUh/cu ft.) to obtain input.

If clocked rate does not match required input from Step 1, increase gas valve outlet pressure to increase input or decrease gas valve outlet pressure to decrease input. Repeat steps b through e until correct input is achieved. Reinstall regulator seal cap on gas valve.

6. Set temperature rise. The furnace must operate within the temperature rise ranges specified on the furnace rating plate. Do not exceed temperature rise range specified on unit rating plate. Determine the temperature rise as follows:

⚠ CAUTION

FURNACE DAMAGE HAZARD

Failure to follow this caution may result in:

- Overheating the heat exchangers or condensing flue gases in heat exchanger areas not designed for condensate.
- Shortened furnace life
- Component damage.

Temperature rise must be within limits specified on furnace rating plate. Recommended operation is at midpoint of rise range or slightly above.

NOTE: Blower access door must be installed when taking temperature rise reading. Leaving blower access door off will result in incorrect temperature measurements.

a. Place thermometers in return and supply ducts as close to furnace as possible. Be sure thermometers do not see radiant heat from heat exchangers. Radiant heat affects temperature rise readings. This practice is particularly important with straight-run ducts.
b. When thermometer readings stabilize, subtract return-air temperature from supply-air temperature to determine air temperature rise.

NOTE: If the temperature rise is outside this range, first check:
(1.)Gas input for heating operation.
(2.)Return and supply ducts for excessive restrictions causing static pressures greater than the maximum heating static listed on the rating plate.

c. Adjust air temperature rise by adjusting blower speed. Increase blower speed to reduce temperature rise. Decrease blower speed to increase temperature rise
d. Turn thermostat down below room temperature and remove blower access door.
e. Refer to the **FURNACE CONTROL PROGRAMMING AND NAVIGATION** section of this manual for instructions on adjusting the blower speed.
f. Repeat steps a through e until temperature rise is within range on rating plate.
g. When correct input rate and temperature rise is achieved, turn gas valve ON/OFF switch to OFF.
h. Remove manometer or similar device from gas valve.
i. Tighten set screw on outlet tower pressure tap with 3/32 in. hex wrench.

⚠ WARNING

FIRE HAZARD

Failure to follow this warning could result in personal injury, death, and/or property damage.

Gas valve outlet pressure tap must be tightened to prevent gas leak.

⚠ CAUTION

FURNACE OVERHEATING HAZARD

Failure to follow this caution may result in reduced furnace life.

Recheck temperature rise. It must be within limits specified on the rating plate. Recommended operation is at the mid-point of rise range or slightly above.

Check Safety Controls

1. Check Main Limit Switch(es)
This control shuts off combustion control system and energizes air-circulating blower motor, if furnace overheats. By using this method to check limit control, it can be established that limit is functioning properly and will operate if there is a restricted duct system or motor failure. If limit control does not function during this test, cause must be determined and corrected.
a. Run furnace for at least 5 minutes.
b. Gradually block off return air with a piece of cardboard or sheet metal until the limit trips.
c. Unblock return air to permit normal circulation for 5 minutes.
d. Reset unit power to clear limit fault lockout.
2. Check draft safeguard switch.
The purpose of this control is to cause the safe shutdown of the furnace during certain blocked vent conditions.
a. Verify vent pipe is cool to the touch.
b. Disconnect power to furnace and remove vent connector from furnace vent elbow.
c. Restore power to furnace and set room thermostat above room temperature.
d. After normal start-up, allow furnace to operate for 2 minutes, then block vent elbow in furnace 80 percent of vent area with a piece of flat sheet metal.
e. Furnace should cycle off within 2 minutes. If gas does not shut off within 2 minutes, determine reason draft safeguard switch did not function properly and correct condition.
f. Remove blockage from furnace vent elbow.
g. Switch will auto-reset when it cools.
h. Re-install vent connector.
i. Reset unit power to clear limit fault lockout.

Checklist

- Put away tools and instruments. Clean up debris.
- Check Input/Output gas pressure
- Check heat rise per application static pressure
- Cooling CFM per application static pressure
- Verify that blower-OFF delay time is selected as desired.
- Verify that blower and burner access doors are properly installed.
- Cycle test furnace with room thermostat.
- Check operation of accessories per manufacturer's instructions.
- Review User's Guide with owner.
- Attach literature packet to furnace.

Table 16 – Manifold Pressure for Gas Input Rate (in. w.c.) – 3.35 mm Orifice – USA Only

Tabulated Data Based on 40,000 BTUH Burner, Derated 2% / 1000 FT (305M) Above Sea Level)							
ALTITUDE RANGE ft (m)	AVG. GAS HEAT VALUE AT ALTITUDE (Btu/cu ft)	SPECIFIC GRAVITY OF NATURAL GAS					
		0.58	0.60	0.62	0.64	0.66	0.68
		Manifold Pressure					
0 (0) to 2000 (610)	950	2.9	3.0	3.1	3.2	3.3	3.4
	975	2.7	2.8	2.9	3.0	3.1	3.2
	1000	2.6	2.7	2.8	2.9	3.0	3.1
	1025	2.5	2.6	2.6	2.7	2.8	2.9
	1050	2.4	2.4	2.5	2.6	2.7	2.8
	1075	2.3	2.3	2.4	2.5	2.6	2.6
	1100	2.2	2.2	2.3	2.4	2.4	2.5
	1125	2.1	2.1	2.2	2.3	2.3	2.4
	1150	2.0	2.0	2.1	2.2	2.2	2.3
2001 (611) to 3000 (914)	850	3.1	3.2	3.3	3.4	3.5	3.6
	875	2.9	3.0	3.1	3.2	3.3	3.4
	900	2.7	2.8	2.9	3.0	3.1	3.2
	925	2.6	2.7	2.8	2.9	3.0	3.0
	950	2.5	2.5	2.6	2.7	2.8	2.9
	975	2.3	2.4	2.5	2.6	2.7	2.7
	1000	2.2	2.3	2.4	2.5	2.5	2.6
	1025	2.1	2.2	2.3	2.3	2.4	2.5
	1050	2.0	2.1	2.2	2.2	2.3	2.4
3001 (915) to 4000 (1219)	825	3.0	3.1	3.2	3.3	3.4	3.5
	850	2.8	2.9	3.0	3.1	3.2	3.3
	875	2.7	2.8	2.9	3.0	3.1	3.1
	900	2.5	2.6	2.7	2.8	2.9	3.0
	925	2.4	2.5	2.6	2.6	2.7	2.8
	950	2.3	2.4	2.4	2.5	2.6	2.7
	975	2.2	2.2	2.3	2.4	2.5	2.5
	1000	2.1	2.1	2.2	2.3	2.3	2.4
	1050	1.9	1.9	2.0	2.1	2.1	2.2
4001 (1220) to 5000 (1524)	800	3.0	3.1	3.2	3.3	3.4	3.5
	825	2.8	2.9	3.0	3.1	3.2	3.3
	850	2.6	2.7	2.8	2.9	3.0	3.1
	875	2.5	2.6	2.6	2.7	2.8	2.9
	900	2.3	2.4	2.5	2.6	2.7	2.7
	925	2.2	2.3	2.4	2.4	2.5	2.6
	950	2.1	2.2	2.2	2.3	2.4	2.5
	975	2.0	2.1	2.1	2.2	2.3	2.3
5001 (1525) to 6000 (1829)	775	2.9	3.0	3.1	3.2	3.3	3.4
	800	2.7	2.8	2.9	3.0	3.1	3.2
	825	2.6	2.7	2.7	2.8	2.9	3.0
	850	2.4	2.5	2.6	2.7	2.7	2.8
	875	2.3	2.4	2.4	2.5	2.6	2.7
	900	2.2	2.2	2.3	2.4	2.5	2.5
	925	2.0	2.1	2.2	2.3	2.3	2.4
	950	1.9	2.0	2.1	2.1	2.2	2.3
6001 (1830) to 7000 (2133)	725	3.1	3.2	3.3	3.4	3.5	3.6
	750	2.9	3.0	3.1	3.2	3.2	3.3
	775	2.7	2.8	2.9	3.0	3.0	3.1
	800	2.5	2.6	2.7	2.8	2.9	2.9
	825	2.4	2.4	2.5	2.6	2.7	2.8
	850	2.2	2.3	2.4	2.5	2.5	2.6
	875	2.1	2.2	2.2	2.3	2.4	2.5
	900	2.0	2.1	2.1	2.2	2.3	2.3
	925	1.9	1.9	2.0	2.1	2.1	2.2
7001 (2134) to 8000 (2438)	700	3.0	3.1	3.2	3.3	3.4	3.5
	725	2.8	2.9	3.0	3.1	3.2	3.3
	750	2.6	2.7	2.8	2.9	3.0	3.1
	775	2.5	2.5	2.6	2.7	2.8	2.9
	800	2.3	2.4	2.5	2.5	2.6	2.7
	825	2.2	2.2	2.3	2.4	2.5	2.5
	850	2.0	2.1	2.2	2.3	2.3	2.4
	875	1.9	2.0	2.1	2.1	2.2	2.3

Table 16 – Manifold Pressure for Gas Input Rate (in. w.c.) – 3.35 mm Orifice – USA Only (Continued)

Tabulated Data Based on 40,000 BTUH Burner, Derated 2% / 1000 FT (305M) Above Sea Level)							
ALTITUDE RANGE ft (m)	AVG. GAS HEAT VALUE AT ALTITUDE (Btu/cu ft)	SPECIFIC GRAVITY OF NATURAL GAS					
		0.58	0.60	0.62	0.64	0.66	0.68
		Manifold Pressure					
8001 (2439) to 9000 (2743)	700	2.8	2.9	3.0	3.1	3.1	3.2
	725	2.6	2.7	2.8	2.8	2.9	3.0
	750	2.4	2.5	2.6	2.7	2.7	2.8
	775	2.3	2.3	2.4	2.5	2.6	2.6
	800	2.1	2.2	2.3	2.3	2.4	2.5
	825	2.0	2.1	2.1	2.2	2.3	2.3
	850	1.9	1.9	2.0	2.1	2.1	2.2
9001 (2744) to 10000 (3048)	650	2.9	3.0	3.1	3.2	3.3	3.4
	675	2.7	2.8	2.9	3.0	3.1	3.2
	700	2.5	2.6	2.7	2.8	2.9	3.0
	725	2.4	2.4	2.5	2.6	2.7	2.8
	750	2.2	2.3	2.4	2.4	2.5	2.6
	775	2.1	2.1	2.2	2.3	2.4	2.4
	800	1.9	2.0	2.1	2.1	2.2	2.3
	825	1.8	1.9	1.9	2.0	2.1	2.1

Table 17 – Manifold Pressure for Gas Input Rate (in. w.c.) – #18 Orifice – USA Only

Tabulated Data Based on 60,000 BTUH Burner, Derated 2% / 1000 FT (305M) Above Sea Level)							
ALTITUDE RANGE ft (m)	AVG. GAS HEAT VALUE AT ALTITUDE (Btu/cu ft)	SPECIFIC GRAVITY OF NATURAL GAS					
		0.58	0.60	0.62	0.64	0.66	0.68
		Manifold Pressure					
0 (0) to 2000 (610)	950	2.4	2.5	2.5	2.6	2.7	2.8
	975	2.3	2.3	2.4	2.5	2.6	2.6
	1000	2.1	2.2	2.3	2.4	2.4	2.5
	1025	2.0	2.1	2.2	2.3	2.3	2.4
	1050	1.9	2.0	2.1	2.1	2.2	2.3
	1075	1.9	1.9	2.0	2.1	2.1	2.2
	1100	1.8	1.8	1.9	2.0	2.0	2.1
	1125	1.7	1.8	1.8	1.9	1.9	2.0
	1150	1.6	1.7	1.7	1.8	1.8	1.9
2001 (611) to 3000 (914)	850	2.5	2.6	2.7	2.8	2.9	3.0
	875	2.4	2.5	2.6	2.6	2.7	2.8
	900	2.3	2.3	2.4	2.5	2.6	2.7
	925	2.1	2.2	2.3	2.4	2.4	2.5
	950	2.0	2.1	2.2	2.2	2.3	2.4
	975	1.9	2.0	2.1	2.1	2.2	2.3
	1000	1.8	1.9	2.0	2.0	2.1	2.2
	1025	1.7	1.8	1.9	1.9	2.0	2.0
	1050	1.7	1.7	1.8	1.8	1.9	2.0
3001 (915) to 4000 (1219)	825	2.5	2.6	2.7	2.7	2.8	2.9
	850	2.3	2.4	2.5	2.6	2.7	2.7
	875	2.2	2.3	2.4	2.4	2.5	2.6
	900	2.1	2.2	2.2	2.3	2.4	2.5
	925	2.0	2.0	2.1	2.2	2.3	2.3
	950	1.9	1.9	2.0	2.1	2.1	2.2
	975	1.8	1.8	1.9	2.0	2.0	2.1
	1000	1.7	1.8	1.8	1.9	1.9	2.0
	1050	1.5	1.6	1.6	1.7	1.7	1.8
4001 (1220) to 5000 (1524)	800	2.4	2.5	2.6	2.7	2.8	2.9
	825	2.3	2.4	2.5	2.5	2.6	2.7
	850	2.2	2.2	2.3	2.4	2.5	2.5
	875	2.0	2.1	2.2	2.3	2.3	2.4
	900	1.9	2.0	2.1	2.1	2.2	2.3
	925	1.8	1.9	2.0	2.0	2.1	2.1
	950	1.7	1.8	1.9	1.9	2.0	2.0
	975	1.6	1.7	1.8	1.8	1.9	1.9

Table 17 – Manifold Pressure for Gas Input Rate (in. w.c.) – #18 Orifice – USA Only (Continued)

Tabulated Data Based on 60,000 BTUH Burner, Derated 2% / 1000 FT (305M) Above Sea Level)							
ALTITUDE RANGE ft (m)	AVG. GAS HEAT VALUE AT ALTITUDE (Btu/cu ft)	SPECIFIC GRAVITY OF NATURAL GAS					
		0.58	0.60	0.62	0.64	0.66	0.68
		Manifold Pressure					
5001 (1525) to 6000 (1829)	775	2.4	2.5	2.6	2.6	2.7	2.8
	800	2.3	2.3	2.4	2.5	2.6	2.6
	825	2.1	2.2	2.3	2.3	2.4	2.5
	850	2.0	2.1	2.1	2.2	2.3	2.3
	875	1.9	1.9	2.0	2.1	2.1	2.2
	900	1.8	1.8	1.9	2.0	2.0	2.1
	925	1.7	1.7	1.8	1.9	1.9	2.0
	950	1.6	1.7	1.7	1.8	1.8	1.9
6001 (1830) to 7000 (2133)	725	2.5	2.6	2.7	2.8	2.9	3.0
	750	2.4	2.4	2.5	2.6	2.7	2.8
	775	2.2	2.3	2.4	2.4	2.5	2.6
	800	2.1	2.1	2.2	2.3	2.4	2.4
	825	1.9	2.0	2.1	2.1	2.2	2.3
	850	1.8	1.9	2.0	2.0	2.1	2.2
	875	1.7	1.8	1.9	1.9	2.0	2.0
	900	1.6	1.7	1.7	1.8	1.9	1.9
	925	1.5	1.6	1.7	1.7	1.8	1.8
7001 (2134) to 8000 (2438)	700	2.5	2.6	2.7	2.7	2.8	2.9
	725	2.3	2.4	2.5	2.6	2.6	2.7
	750	2.2	2.2	2.3	2.4	2.5	2.5
	775	2.0	2.1	2.2	2.2	2.3	2.4
	800	1.9	2.0	2.0	2.1	2.2	2.2
	825	1.8	1.9	1.9	2.0	2.0	2.1
	850	1.7	1.7	1.8	1.9	1.9	2.0
	875	1.6	1.6	1.7	1.8	1.8	1.9
8001 (2439) to 9000 (2743)	700	2.3	2.4	2.4	2.5	2.6	2.7
	725	2.1	2.2	2.3	2.3	2.4	2.5
	750	2.0	2.1	2.1	2.2	2.3	2.3
	775	1.9	1.9	2.0	2.1	2.1	2.2
	800	1.7	1.8	1.9	1.9	2.0	2.0
	825	1.6	1.7	1.8	1.8	1.9	1.9
	850	1.5	1.6	1.7	1.7	1.8	1.8
9001 (2744) to 10000 (3048)	650	2.4	2.5	2.6	2.7	2.8	2.8
	675	2.2	2.3	2.4	2.5	2.6	2.6
	700	2.1	2.2	2.2	2.3	2.4	2.5
	725	1.9	2.0	2.1	2.2	2.2	2.3
	750	1.8	1.9	1.9	2.0	2.1	2.1
	775	1.7	1.8	1.8	1.9	1.9	2.0
	800	1.6	1.7	1.7	1.8	1.8	1.9
	825	1.5	1.6	1.6	1.7	1.7	1.8

Table 18 – Manifold Pressure for Gas Input Rate (in. w.c.) – #10 Orifice – USA Only

Tabulated Data Based on 80,000 BTUH Burner, Derated 2% / 1000 FT (305M) Above Sea Level)							
ALTITUDE RANGE ft (m)	AVG. GAS HEAT VALUE AT ALTITUDE (Btu/cu ft)	SPECIFIC GRAVITY OF NATURAL GAS					
		0.58	0.60	0.62	0.64	0.66	0.68
		Manifold Pressure					
0 (0) to 2000 (610)	950	2.6	2.7	2.8	2.9	3.0	3.1
	975	2.5	2.6	2.7	2.7	2.8	2.9
	1000	2.4	2.4	2.5	2.6	2.7	2.8
	1025	2.2	2.3	2.4	2.5	2.6	2.6
	1050	2.1	2.2	2.3	2.4	2.4	2.5
	1075	2.0	2.1	2.2	2.3	2.3	2.4
	1100	2.0	2.0	2.1	2.2	2.2	2.3
	1125	1.9	1.9	2.0	2.1	2.1	2.2
	1150	1.8	1.8	1.9	2.0	2.0	2.1

Table 18 – Manifold Pressure for Gas Input Rate (in. w.c.) – #10 Orifice – USA Only (Continued)

Tabulated Data Based on 80,000 BTUH Burner, Derated 2% / 1000 FT (305M) Above Sea Level)							
ALTITUDE RANGE ft (m)	AVG. GAS HEAT VALUE AT ALTITUDE (Btu/cu ft)	SPECIFIC GRAVITY OF NATURAL GAS					
		0.58	0.60	0.62	0.64	0.66	0.68
		Manifold Pressure					
2001 (611) to 3000 (914)	850	2.8	2.9	3.0	3.1	3.2	3.3
	875	2.6	2.7	2.8	2.9	3.0	3.1
	900	2.5	2.6	2.7	2.7	2.8	2.9
	925	2.4	2.4	2.5	2.6	2.7	2.8
	950	2.2	2.3	2.4	2.5	2.5	2.6
	975	2.1	2.2	2.3	2.3	2.4	2.5
	1000	2.0	2.1	2.2	2.2	2.3	2.4
	1025	1.9	2.0	2.1	2.1	2.2	2.3
	1050	1.8	1.9	2.0	2.0	2.1	2.1
3001 (915) to 4000 (1219)	825	2.7	2.8	2.9	3.0	3.1	3.2
	850	2.6	2.7	2.8	2.8	2.9	3.0
	875	2.4	2.5	2.6	2.7	2.8	2.9
	900	2.3	2.4	2.5	2.5	2.6	2.7
	925	2.2	2.3	2.3	2.4	2.5	2.6
	950	2.1	2.1	2.2	2.3	2.3	2.4
	975	2.0	2.0	2.1	2.2	2.2	2.3
	1000	1.9	1.9	2.0	2.1	2.1	2.2
	1050	1.7	1.7	1.8	1.9	1.9	2.0
4001 (1220) to 5000 (1524)	800	2.7	2.8	2.9	3.0	3.1	3.1
	825	2.5	2.6	2.7	2.8	2.9	3.0
	850	2.4	2.5	2.5	2.6	2.7	2.8
	875	2.2	2.3	2.4	2.5	2.6	2.6
	900	2.1	2.2	2.3	2.3	2.4	2.5
	925	2.0	2.1	2.1	2.2	2.3	2.4
	950	1.9	2.0	2.0	2.1	2.2	2.2
	975	1.8	1.9	1.9	2.0	2.1	2.1
5001 (1525) to 6000 (1829)	775	2.6	2.7	2.8	2.9	3.0	3.1
	800	2.5	2.6	2.6	2.7	2.8	2.9
	825	2.3	2.4	2.5	2.6	2.6	2.7
	850	2.2	2.3	2.3	2.4	2.5	2.6
	875	2.1	2.1	2.2	2.3	2.4	2.4
	900	2.0	2.0	2.1	2.2	2.2	2.3
	925	1.9	1.9	2.0	2.0	2.1	2.2
	950	1.8	1.8	1.9	1.9	2.0	2.1
6001 (1830) to 7000 (2133)	725	2.8	2.9	3.0	3.1	3.2	3.3
	750	2.6	2.7	2.8	2.9	2.9	3.0
	775	2.4	2.5	2.6	2.7	2.8	2.8
	800	2.3	2.4	2.4	2.5	2.6	2.7
	825	2.1	2.2	2.3	2.4	2.4	2.5
	850	2.0	2.1	2.2	2.2	2.3	2.4
	875	1.9	2.0	2.0	2.1	2.2	2.2
	900	1.8	1.9	1.9	2.0	2.0	2.1
	925	1.7	1.8	1.8	1.9	1.9	2.0
7001 (2134) to 8000 (2438)	700	2.7	2.8	2.9	3.0	3.1	3.2
	725	2.5	2.6	2.7	2.8	2.9	3.0
	750	2.4	2.5	2.5	2.6	2.7	2.8
	775	2.2	2.3	2.4	2.5	2.5	2.6
	800	2.1	2.2	2.2	2.3	2.4	2.5
	825	2.0	2.0	2.1	2.2	2.2	2.3
	850	1.9	1.9	2.0	2.0	2.1	2.2
	875	1.7	1.8	1.9	1.9	2.0	2.1
8001 (2439) to 9000 (2743)	700	2.5	2.6	2.7	2.8	2.9	2.9
	725	2.3	2.4	2.5	2.6	2.7	2.7
	750	2.2	2.3	2.3	2.4	2.5	2.6
	775	2.0	2.1	2.2	2.3	2.3	2.4
	800	1.9	2.0	2.1	2.1	2.2	2.3
	825	1.8	1.9	1.9	2.0	2.1	2.1
	850	1.7	1.8	1.8	1.9	1.9	2.0

Table 18 – Manifold Pressure for Gas Input Rate (in. w.c.) – #10 Orifice – USA Only (Continued)

Tabulated Data Based on 80,000 BTUH Burner, Derated 2% / 1000 FT (305M) Above Sea Level)							
ALTITUDE RANGE ft (m)	AVG. GAS HEAT VALUE AT ALTITUDE (Btu/cu ft)	SPECIFIC GRAVITY OF NATURAL GAS					
		0.58	0.60	0.62	0.64	0.66	0.68
		Manifold Pressure					
9001 (2744) to 10000 (3048)	650	2.7	2.8	2.9	2.9	3.0	3.1
	675	2.5	2.6	2.6	2.7	2.8	2.9
	700	2.3	2.4	2.5	2.5	2.6	2.7
	725	2.1	2.2	2.3	2.4	2.4	2.5
	750	2.0	2.1	2.1	2.2	2.3	2.3
	775	1.9	1.9	2.0	2.1	2.1	2.2
	800	1.8	1.8	1.9	1.9	2.0	2.1
	825	1.7	1.7	1.8	1.8	1.9	1.9

Table 19 – Manifold Pressure for Gas Input Rate (in. w.c.) – #6 Orifice – USA Only

Tabulated Data Based on 100,000 BTUH Burner, Derated 2% / 1000 FT (305M) Above Sea Level)							
ALTITUDE RANGE ft (m)	AVG. GAS HEAT VALUE AT ALTITUDE (Btu/cu ft)	SPECIFIC GRAVITY OF NATURAL GAS					
		0.58	0.60	0.62	0.64	0.66	0.68
		Manifold Pressure					
0 (0) to 2000 (610)	950	2.4	2.5	2.6	2.7	2.8	2.9
	975	2.3	2.4	2.5	2.6	2.6	2.7
	1000	2.2	2.3	2.4	2.4	2.5	2.6
	1025	2.1	2.2	2.2	2.3	2.4	2.5
	1050	2.0	2.1	2.1	2.2	2.3	2.4
	1075	1.9	2.0	2.0	2.1	2.2	2.2
	1100	1.8	1.9	2.0	2.0	2.1	2.1
	1125	1.7	1.8	1.9	1.9	2.0	2.0
	1150	1.7	1.7	1.8	1.8	1.9	2.0
2001 (611) to 3000 (914)	850	2.6	2.7	2.8	2.9	3.0	3.1
	875	2.5	2.6	2.6	2.7	2.8	2.9
	900	2.3	2.4	2.5	2.6	2.7	2.7
	925	2.2	2.3	2.4	2.4	2.5	2.6
	950	2.1	2.2	2.2	2.3	2.4	2.5
	975	2.0	2.1	2.1	2.2	2.3	2.3
	1000	1.9	2.0	2.0	2.1	2.1	2.2
	1025	1.8	1.9	1.9	2.0	2.0	2.1
	1050	1.7	1.8	1.8	1.9	1.9	2.0
3001 (915) to 4000 (1219)	825	2.6	2.7	2.7	2.8	2.9	3.0
	850	2.4	2.5	2.6	2.7	2.7	2.8
	875	2.3	2.4	2.4	2.5	2.6	2.7
	900	2.2	2.2	2.3	2.4	2.4	2.5
	925	2.0	2.1	2.2	2.2	2.3	2.4
	950	1.9	2.0	2.1	2.1	2.2	2.3
	975	1.8	1.9	2.0	2.0	2.1	2.2
	1000	1.7	1.8	1.9	1.9	2.0	2.0
	1050	1.6	1.6	1.7	1.7	1.8	1.9
4001 (1220) to 5000 (1524)	800	2.5	2.6	2.7	2.8	2.9	2.9
	825	2.4	2.4	2.5	2.6	2.7	2.8
	850	2.2	2.3	2.4	2.5	2.5	2.6
	875	2.1	2.2	2.2	2.3	2.4	2.5
	900	2.0	2.1	2.1	2.2	2.3	2.3
	925	1.9	1.9	2.0	2.1	2.1	2.2
	950	1.8	1.8	1.9	2.0	2.0	2.1
	975	1.7	1.8	1.8	1.9	1.9	2.0
5001 (1525) to 6000 (1829)	775	2.5	2.6	2.6	2.7	2.8	2.9
	800	2.3	2.4	2.5	2.6	2.6	2.7
	825	2.2	2.3	2.3	2.4	2.5	2.6
	850	2.1	2.1	2.2	2.3	2.3	2.4
	875	1.9	2.0	2.1	2.1	2.2	2.3
	900	1.8	1.9	2.0	2.0	2.1	2.1
	925	1.7	1.8	1.9	1.9	2.0	2.0
	950	1.6	1.7	1.8	1.8	1.9	1.9

Table 19 – Manifold Pressure for Gas Input Rate (in. w.c.) – #6 Orifice – USA Only (Continued)

Tabulated Data Based on 100,000 BTUH Burner, Derated 2% / 1000 FT (305M) Above Sea Level)							
ALTITUDE RANGE ft (m)	AVG. GAS HEAT VALUE AT ALTITUDE (Btu/cu ft)	SPECIFIC GRAVITY OF NATURAL GAS					
		0.58	0.60	0.62	0.64	0.66	0.68
		Manifold Pressure					
6001 (1830) to 7000 (2133)	725	2.6	2.7	2.8	2.9	3.0	3.0
	750	2.4	2.5	2.6	2.7	2.8	2.8
	775	2.3	2.3	2.4	2.5	2.6	2.7
	800	2.1	2.2	2.3	2.4	2.4	2.5
	825	2.0	2.1	2.1	2.2	2.3	2.3
	850	1.9	2.0	2.0	2.1	2.1	2.2
	875	1.8	1.8	1.9	2.0	2.0	2.1
	900	1.7	1.7	1.8	1.9	1.9	2.0
	925	1.6	1.6	1.7	1.8	1.8	1.9
7001 (2134) to 8000 (2438)	700	2.6	2.6	2.7	2.8	2.9	3.0
	725	2.4	2.5	2.5	2.6	2.7	2.8
	750	2.2	2.3	2.4	2.5	2.5	2.6
	775	2.1	2.2	2.2	2.3	2.4	2.4
	800	2.0	2.0	2.1	2.2	2.2	2.3
	825	1.8	1.9	2.0	2.0	2.1	2.2
	850	1.7	1.8	1.9	1.9	2.0	2.0
	875	1.6	1.7	1.8	1.8	1.9	1.9
8001 (2439) to 9000 (2743)	700	2.3	2.4	2.5	2.6	2.7	2.8
	725	2.2	2.3	2.3	2.4	2.5	2.6
	750	2.0	2.1	2.2	2.3	2.3	2.4
	775	1.9	2.0	2.0	2.1	2.2	2.2
	800	1.8	1.9	1.9	2.0	2.0	2.1
	825	1.7	1.7	1.8	1.9	1.9	2.0
	850	1.6	1.6	1.7	1.8	1.8	1.9
9001 (2744) to 10000 (3048)	650	2.5	2.6	2.7	2.8	2.8	2.9
	675	2.3	2.4	2.5	2.6	2.6	2.7
	700	2.2	2.2	2.3	2.4	2.4	2.5
	725	2.0	2.1	2.1	2.2	2.3	2.4
	750	1.9	1.9	2.0	2.1	2.1	2.2
	775	1.8	1.8	1.9	1.9	2.0	2.1
	800	1.6	1.7	1.8	1.8	1.9	1.9
	825	1.5	1.6	1.7	1.7	1.8	1.8

SERVICE AND MAINTENANCE PROCEDURES

Untrained personnel can perform basic maintenance functions such as cleaning and replacing air filters. All other operations must be performed by trained service personnel. A qualified service person should inspect the furnace once a year.

⚠ WARNING

FIRE, INJURY, OR DEATH HAZARD

Failure to follow this warning could result in personal injury, death and/or property damage.

The ability to properly perform maintenance on this equipment requires certain knowledge, mechanical skills, tools, and equipment. If you do not possess these, do not attempt to perform any maintenance on this equipment other than those procedures recommended in the User's Manual.

WARNING

ELECTRICAL SHOCK, FIRE OR EXPLOSION HAZARD

Failure to follow this warning could result in personal injury or death.

Before installing, modifying, or servicing system, main electrical disconnect switch must be in the OFF position and install a lockout tag. There may be more than one disconnect switch. Lock out and tag switch with a suitable warning label. Verify proper operation after servicing.

CAUTION

ELECTRICAL OPERATION HAZARD

Failure to follow this caution may result in improper furnace operation or failure of furnace.

Label all wires prior to disconnection when servicing controls. Wiring errors can cause improper and dangerous operation.

General

These instructions are written as if the furnace is installed in an upflow application. An upflow furnace application is where the blower is located below the combustion and controls section of the furnace, and conditioned air is discharged upward. Since this furnace can be installed in any of the 4 positions shown in Fig. 2, you must revise your orientation to component location accordingly.

Electrical Controls and Wiring

WARNING

ELECTRICAL OPERATION HAZARD

Failure to follow this warning could result in personal injury or death.

There may be more than one electrical supply to the furnace. Check accessories and cooling unit for additional electrical supplies that must be shut off during furnace servicing. Lock out and tag switch with a suitable warning label.

The electrical ground and polarity for 115-V wiring must be properly maintained. Refer to Fig. 23 for field wiring information and to Fig. 36 for furnace wiring information.

NOTE: If the polarity is not correct, the STATUS LED on the control will flash rapidly and Status code (10 . 1) is displayed. This will prevent the furnace from heating. The control system also requires an earth ground for proper operation of the control and flame-sensing electrode.

The 24-V circuit contains an automotive-type, 3-amp. fuse located on the control, see Fig. 36. Any shorts of the 24-V wiring during installation, service, or maintenance will cause this fuse to blow. If fuse replacement is required, use ONLY a 3A fuse. The control LED will display status code (24 . 1) when fuse needs to be replaced.

Proper instrumentation is required to service electrical controls. The control in this furnace is equipped with a Status Code LED (Light-Emitting Diode) and Major/Minor 3 digit codes to aid in installation, servicing, and troubleshooting. The furnace control LED is either ON continuously, rapid flashing or displaying a code composed of 2 digits. The major status code is displayed on the LED indicator through the door with the first digit being the number of short flashes and the second digit being the number of long flashes. The major status code is displayed in the first 2 digits of the display. The minor status code is displayed in the third digit.

For an explanation of status codes, refer to service label located on blower access door or Fig. 35 and the troubleshooting guide by scanning the QR code or see FIG # for a brief Troubleshooting Guide.

Retrieving Stored Fault Codes

The stored status code will not be erased from the control memory, if 115-V or 24-V power is interrupted. See the Service Label Fig. 35 for more information.

1. To retrieve the last 7 fault codes, proceed with the following:

NOTE: NO thermostat signal may be present at control, and all blower-OFF delays must be completed.

a. Leave 115-V power to furnace turned on.
b. Remove outer access door.
c. Remove the inner blower door.
d. Depress blower door switch to energize the control board.

CAUTION

SHOCK HAZARD

Failure to follow this caution could result in personal injury.

Do not tape or permanently allow the door switch to be bypassed. Temporarily press the door switch with one hand while accessing the service buttons with your other hand. Do not touch uninsulated electrical components.

e. Press menu/select button until (FLt) is displayed.
f. Press Next/Option button to cycle through the fault history. Faults remain in memory for 72 hours of powered operation after the last fault occurs. Faults may be manually cleared by selecting (CLr) with the menu/select button.

CARE AND MAINTENANCE

WARNING

FIRE OR EXPLOSION HAZARD

Failure to follow this warning could result in personal injury, death and/or property damage.

Never store anything on, near, or in contact with the furnace, such as:

1. Spray or aerosol cans, rags, brooms, dust mops, vacuum cleaners, or other cleaning tools.
2. Soap powders, bleaches, waxes or other cleaning compounds, plastic or plastic containers, gasoline, kerosene, cigarette lighter fluid, dry cleaning fluids, or other volatile fluids.
3. Paint thinners and other painting compounds, paper bags, or other paper products.

For continuing high performance and to minimize possible equipment failure, periodic maintenance must be performed on this equipment. Consult your local dealer about proper frequency of maintenance and the availability of a maintenance contract.

WARNING

ELECTRICAL SHOCK AND FIRE HAZARD

Failure to follow this warning could result in personal injury, death or property damage.

Turn off the gas and electrical supplies to the unit and install lockout tag before performing any maintenance or service. Follow the operating instructions on the label attached to the furnace.

⚠ WARNING

CARBON MONOXIDE POISONING AND FIRE HAZARD

Failure to follow this warning could result in personal injury, death and/or property damage.

Never operate unit without a filter or with filter access door removed.

⚠ CAUTION

CUT HAZARD

Failure to follow this caution may result in personal injury.

Sheet metal parts may have sharp edges or burrs. Use care and wear appropriate protective clothing, safety glasses and gloves when handling parts and servicing furnaces.

The minimum maintenance on this furnace is as follows:

1. Check and clean/replace air filter each month or more frequently if required. Replace if torn.
2. Check burner inlet elbow opening for cleanliness and any visible debris. Burner assembly removal should only be performed for troubleshooting and diagnosis of operational issues. Refer to troubleshooting and service guide.
3. Check blower motor and wheel for cleanliness each heating and cooling season. Clean as necessary.
4. Check electrical connections for tightness and controls for proper operation each heating season. Service as necessary.
5. Inspect the vent pipe/vent system before each heating season for rust, corrosion, water leakage, sagging pipes or broken fittings. Have vent pipes/vent system serviced by a qualified service agency.
6. Inspect any accessories attached to the furnace such as a humidifier or electronic air cleaner. Perform any service or maintenance to the accessories as recommended in the accessory instructions.

Cleaning and/or Replacing Air Filter

The air filter arrangement will vary depending on the application. The filter is exterior to the furnace casing.

NOTE: If the filter has an airflow direction arrow, the arrow must point towards the blower.

Table 20 – Filter Size Information (In. / mm)

FURNACE CASING WIDTH In. (mm)	FILTER SIZE (In. / mm)		FILTER TYPE
	Side Return	Bottom Return	
17-1/2 (445)	16 X 25 X 3/4 (406 x 635 x 19)	16 X 25 X 3/4 (406 x 635 x 19)	Washable*
21 (533)	16 x 25 x 3/4 (406 x 635 x 19)	20 X 25 X 3/4 (508 x 635 x 19)	Washable*

*. Recommended

"Blower Motor and Wheel Maintenance

⚠ WARNING

ELECTRICAL SHOCK HAZARD

Failure to follow this warning could result in personal injury or death.

Blower access door switch opens 115-V power to control. No component operation can occur unless switch is closed. Caution must be taken when manually closing this switch for service purposes.

NOTE: The blower wheel should not be dropped or bent as balance will be affected. The following steps should be performed by a qualified service agency.

To ensure long life and high efficiency, clean accumulated dirt and grease from blower wheel and motor annually.

The inducer and blower motors are pre-lubricated and require no additional lubrication. These motors can be identified by the absence of oil ports on each end of the motor.

Clean blower motor and wheel as follows:

1. Turn off electrical supply to furnace.
2. Remove outer door.
3. Remove two screws from blower access door and remove blower access door.
4. All factory wires can be left connected, but field thermostat connections may need to be disconnected depending on their length and routing.
5. Remove two screws holding blower assembly to blower deck and slide blower assembly out of furnace.
6. Clean blower wheel and motor using a vacuum with soft brush attachment. Blower wheel blades may be cleaned with a small paint or flux brush. Do not remove or disturb balance weights (clips) on blower wheel blades.
7. Vacuum any loose dust from blower housing, wheel and motor.
8. If a greasy residue is present on blower wheel, remove wheel from the blower housing and wash it with an appropriate degreaser. To remove wheel:

NOTE: Before disassembly, mark blower motor, and blower housing so motor and each arm is positioned at the same location during reassembly.

   a. Disconnect power choke wires (if used) and ground wire attached to blower housing.
   b. Remove screws securing cutoff plate and remove cutoff plate from housing.
   c. Loosen set screw holding blower wheel on motor shaft (160+/-20 in.-lb. when reassembling).
   d. Remove bolts holding motor to blower housing and slide motor out of wheel (40+/-10 in.-lb. when reassembling).
   e. Remove blower wheel from housing.
   f. Clean wheel and housing.

9. Reassemble motor and blower by reversing steps 8f finishing with 8a. Be sure to reattach ground wire to the blower housing.
10. Verify that blower wheel is centered in blower housing and set screw contacts the flat portion of the motor shaft. Loosen set screw on blower wheel and reposition if necessary.
11. Spin the blower wheel by hand to verify that the wheel does not rub on the housing.
12. Reinstall blower assembly in furnace.
13. Reinstall two screws securing blower assembly to blower deck.

⚠ CAUTION

UNIT DAMAGE HAZARD

Failure to follow this caution may result in shortened heat exchanger life.

Heating fan speed(s) MUST be adjusted to provide proper air temperature rise as specified on the rating plate. Recommended operation is at the midpoint of the rise range or slightly above. Refer to "SET TEMPERATURE RISE" under START-UP, ADJUSTMENT, and SAFETY CHECK.

NOTE: Refer to Table 9 for motor speed lead relocation if leads were not identified before disconnection.

14. Refer to furnace wiring diagram, and connect thermostat leads if previously disconnected.
15. To check blower for proper rotation:
    a. Turn on electrical supply.

⚠ WARNING

ELECTRICAL SHOCK HAZARD

Failure to follow this warning could result in personal injury or death.

Blower access door switch opens 115-V power to furnace control. No component operation can occur unless switch is closed. Exercise caution to avoid electrical shock from exposed electrical components when manually closing this switch for service purposes.

    b. Manually close blower access door switch.
    c. Verify blower is rotating in the correct direction.
16. If furnace is operating properly, RELEASE BLOWER ACCESS DOOR SWITCH. Remove any jumpers or reconnect any disconnected thermostat leads. Replace blower access door.
17. Reinstall outer door.
18. Cycle furnace through one complete heating and cooling cycle. Verify the furnace temperature rise as shown in (Adjustments on p26). Adjust temperature rise as shown in (Adjustments on p26). If outdoor temperature is below 70°F, (21°C) turn off circuit breaker to outdoor unit before running furnace in the cooling cycle. Turn outdoor circuit breaker on after completing cooling cycle.

Flame Sensor Cleaning and Servicing Igniter

Cleaning Flame Sensor

The following items must be performed by a qualified service technician. If the flame sensor develops an accumulation of light dirt or dust, it may be cleaned by using the following procedure:

⚠ WARNING

ELECTRICAL SHOCK AND FIRE HAZARD

Failure to follow this warning could result in personal injury, death, and/or property damage.

Turn off the gas and electrical supplies to the furnace and install lockout tag before performing any maintenance or service. Follow the operating instructions on the label attached to the furnace.

Refer to Fig. 38.

1. Disconnect power at external disconnect, fuse or circuit breaker.
2. Turn off gas at external shut-off or gas meter.
3. Remove control door and set aside.
4. Turn electric switch on gas valve to OFF.
5. Disconnect Flame Sensor wire from Flame Sensor.
6. Remove the flame sensor from the burner assembly.
7. (Optional) Remove the Hot Surface Igniter (HSI) and bracket with igniter gasket from the burner assembly.
8. Check igniter resistance. Nominal resistance is 40 to 70 ohms at room temperature and is stable over the life of the igniter.
9. Clean the flame sensor with fine steel wool (0000 grade). Do not use sand paper or emery cloth.

To reinstall igniter and flame sensor:

1. Install the Hot Surface Igniter (HSI) and bracket with igniter gasket into burner assembly.
2. Install flame sensor into burner assembly.
3. When installing the HSI and flame sensor, ¼" screws that are the same size of those removed must be used. Do not use longer screws.

NOTE: If insulation assembly is damaged, do not attempt to repair, must be replaced with insulation kit.

NOTE: Proper use of Personal Protective Equipment (PPE) must be followed, including safety glasses, gloves, and dust mask when removing and reinstalling the heat exchanger insulation assembly.

4. Connect the wire for the flame sensor.
5. Connect the wire for the Hot Surface Igniter.

⚠ WARNING

FIRE OR EXPLOSION HAZARD

Failure to follow this warning could result in personal injury, death, and/or property damage.

Never purge a gas line into a combustion chamber. Never test for gas leaks with an open flame. Use a commercially available soap solution made specifically for the detection of leaks to check all connections. A fire or explosion may result causing property damage, personal injury or loss of life.

6. Turn gas on at electric switch on gas valve and at external shut-off or meter
7. Turn power on at external disconnect, fuse or circuit breaker.
8. Run the furnace through two complete heating cycles to check for proper operation
9. Install control door when complete.

Cleaning Heat Exchanger

The following steps should be performed by a qualified service agency:

NOTE: If the heat exchangers get a heavy accumulation of soot and carbon, they should be replaced rather than trying to clean them thoroughly. A heavy build-up of soot and carbon indicates that a problem exists which needs to be corrected, such as improper adjustment of gas valve outlet pressure, insufficient or poor quality combustion air, incorrect size or damaged orifice(s), improper gas, or a restricted heat exchanger. Action must be taken to correct the problem.

If it becomes necessary to clean the heat exchangers because of dust or corrosion, proceed as follows:

1. Turn OFF gas and electrical power to furnace.
2. Remove outer access door.
3. Disconnect vent connector from furnace vent elbow.
4. Disconnect wires to the following components. Mark wires to aid in reconnection of (be careful when disconnecting wires from switches because damage may occur):
    a. Inducer motor
    b. Transducer
    c. Limit over-temperature switch
    d. Gas valve
    e. Hot surface igniter

f. Flame-sensing electrode
g. Burner thermal switch
h. DSS Draft Safeguard

5. Remove screws that fasten the inducer cover assembly to the cell panel. Be careful not to damage the collector box. Inducer assembly and elbow need not be removed from collector box.
6. Disconnect gas supply line from gas valve.
7. Remove screws that attach the burner assembly to the cell panel. The gas valve and burners tube need not be removed from burner box.

NOTE: Be very careful when removing burner assembly to avoid breaking igniter.

8. Remove insulation assembly from burner tube inlets.

NOTE: Proper use of Personal Protective Equipment (PPE) must be followed, including safety glasses, gloves, and dust mask when removing and reinstalling the heat exchanger insulation assembly.

9. Using field-provided large caliber rifle cleaning brush, 36" (914 mm) long steel spring cable, a variable speed, reversible electric drill, and vacuum cleaner, clean cells as follows:

NOTE: The materials needed in the step above can usually be purchased at local hardware stores.

a. Remove metal screw fitting from wire brush to allow insertion into cable.
b. Insert the twisted wire end of brush into end of spring cable, and crimp tight with crimping tool or crimp by striking with ball-peen hammer. TIGHTNESS IS VERY IMPORTANT.

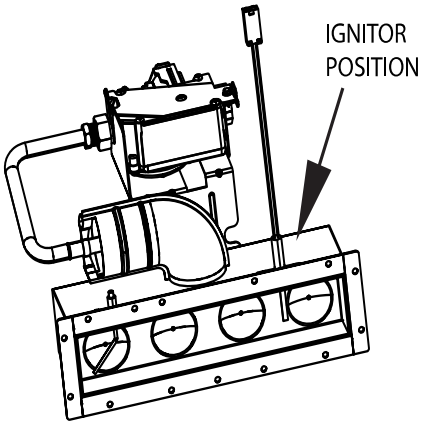

A180230

Fig. 38 – Igniter Position

(1.) Attach variable-speed, reversible drill to the end of spring cable (end opposite brush).
(2.) Insert brush end of cable into the outlet opening of cell and slowly rotate with drill. DO NOT force cable. Gradually insert cable into upper pass of cell, see Fig. 39**.**
(3.) Work cable in and out of cell 3 or 4 times to obtain sufficient cleaning. DO NOT pull cable with great force. Reverse drill and gradually work cable out.
(4.) Insert brush end of cable in burner inlet opening of cell, and proceed to clean two lower passes of cell in same manner as upper pass.
(5.) Repeat foregoing procedures until each cell in furnace has been cleaned.
(6.) Using vacuum cleaner, remove residue from each cell.
(7.) Using vacuum cleaner with soft brush attachment, clean burner assembly.
(8.) Clean flame sensor with fine steel wool.
(9.) Reinstall the insulation assembly.

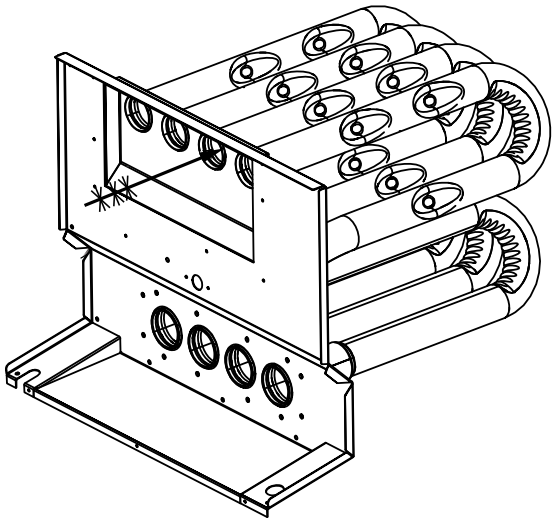

A190291

Fig. 39 – Cleaning Heat Exchanger Cell

NOTE: If insulation assembly is damaged, do not attempt to repair, must be replaced with insulation kit.

NOTE: Proper use of Personal Protective Equipment (PPE) must be followed, including safety glasses, gloves, and dust mask when removing and reinstalling the heat exchanger insulation assembly.

(10.)Reinstall burner assembly.

10. Remove old sealant from cell panel and collector box flange.
11. Spray releasing agent on the heat exchanger cell panel where inducer cover assembly contacts cell panel.

NOTE: A releasing agent such as cooking spray or equivalent (must not contain corn or canola oil, aromatic or halogenated hydrocarbons or inadequate seal may occur) and RTV sealant (G.E. 162, 6702, or Dow-Corning 738) are needed before starting installation.

NOTE: DO NOT substitute any other type of RTV sealant.

12. Apply new sealant to flange of collector box and attach to cell panel using existing screws, making sure all screws are secure.
13. Reconnect wires to the following components. (Use connection diagram on wiring label, if wires were not marked for reconnection locations.):
    a. Burner thermal switch
    b. Inducer motor
    c. Transducer
    d. Limit over-temperature switch
    e. Gas valve
    f. Hot surface igniter
    g. Flame-sensing electrode
    h. DSS Draft Safeguard
14. Reinstall vent connector on furnace vent elbow. Securely fasten vent connector to vent elbow with two (2) field-supplied, corrosion-resistant, sheet metal screws located 180° apart.
15. Replace blower access door only, if it was removed.
16. Set thermostat above room temperature and check furnace for proper operation.
17. Verify blower airflow and speed changes between heating and cooling.
18. Check for gas leaks.
19. Replace outer access door.

⚠ WARNING

FIRE OR EXPLOSION HAZARD

Failure to follow this warning could result in personal injury, death and/or property damage.

Never purge a gas line into a combustion chamber. Never test for gas leaks with an open flame. Use a commercially available soap solution made specifically for the detection of leaks to check all connections.

SEQUENCE OF OPERATION

NOTE: Furnace control must be grounded for proper operation of furnace control and flame sensing electrode. Control is grounded through green/yellow wire routed to gas valve and burner box screw. Using the schematic diagram in Fig. 36, follow the sequence of operation through the different modes. Read and follow the wiring diagram very carefully.

NOTE: If a power interruption occurs during a call for heat W, the control will start a 90-second blower-only ON period 2 seconds after power is restored, if the thermostat is still calling for gas heating. The LED light will flash code 12 and display will show (12 . 1) during the 90-second period, after which the LED will be ON continuous, as long as no faults are detected. After the 90-second blower-ON period, the furnace will respond to the thermostat normally.

The blower door must be installed for power to be conducted through the blower door interlock switch ILK to the furnace control CPU, transformer TRAN, inducer motor IDM, blower motor BLWM, hot-surface igniter HSI, and gas valve GV.

1. **Call for Heat**
   The wall thermostat "calls for heat", closing the R-W circuit. The furnace control performs a self-check, verifies the transducer reads no pressure present, and starts the inducer motor IDM ramp to prepurge
   a. **Inducer Prepurge Period**
      The furnace control CPU ramps up the inducer motor IDM to prepurge pressure then the furnace control CPU begins a 15-second prepurge period. If the transducer fails to reach target pressure the inducer motor IDM will remain running until target pressure is maintained.
   b. **Igniter Warm-Up**
      At the end of the prepurge period, the Hot-Surface Igniter HSI is energized for a 17-second igniter warm-up period. Inducer maintains pressure during igniter warm-up. If inducer prepurge and igniter warm up sequence is not completed in 5 minutes, the unit will shut down and LED light will flash code 31. Retry occurs after 2 minutes.
   c. **Trial for Ignition**
      When the igniter warm-up period is completed the main gas valve relay contact GVR closes to energize the gas valve solenoid GV. The gas valve solenoid GV permits gas flow to the burners where it is ignited by the HSI. Five seconds after the GVR closes, a 2-second flame proving period begins. The HSI igniter will remain energized until the flame is sensed or until the 2-second flame proving period begins.
   d. **Flame Proving**
      When the burner flame is proved at the flame sensor electrode FSE, the inducer motor IDM will increase speed (after a short delay of 14 seconds on some modes) to a higher RUN pressure. The control will maintain this pressure once reached, and the furnace control CPU will begin the blower-ON delay period while continuing to hold the gas valve GV open. If the burner flame is not proved within the 2-second flame proving period, the control CPU will open the gas valve relay GVR, de-energizing the gas valve solenoid GV. The control CPU will repeat the ignition sequence for up to three more Trials-for-Ignition before going to an Ignition-Lockout. Lockout will be reset automatically after 3 hours, or by momentarily interrupting 115 VAC power to the furnace, or by interrupting 24 VAC power at SEC1 or SEC2 to the furnace control CPU (not at W, G, R, etc.). If flame is proved when flame should not be present, the furnace control CPU will lock out of Heating mode and operate the inducer motor IDM until flame is no longer proved.
   e. **Blower-ON Delay**
      If the burner flame is proven, the blower motor is turned on at HEAT speed 25 seconds after the gas valve GV is energized. Simultaneously, the humidifier terminal HUM and electronic air cleaner terminal EAC-1 are energized and remain energized throughout the heating cycle.
   f. **Blower-OFF Delay**
      When the thermostat is satisfied, the R to W circuit is opened, de-energizing the gas valve GV, stopping gas flow to the burners, and de-energizing the humidifier terminal HUM. The inducer motor IDM will remain energized for a 15-second post-purge period. The blower motor BLWM and air cleaner terminal EAC-1 will remain ON at heat airflow for 90, 120, 150, or 180 seconds (depending on the blower-OFF delay selection). The furnace control CPU is factory-set for a 120-second blower-OFF delay.
2. The thermostat "calls for cooling".
   a. **Single-Speed Cooling**
      The thermostat closes the R-to-G-and-Y circuits. The R-to-Y circuit starts the outdoor unit, and the R-to-G-and-Y/Y2 circuits start the furnace blower motor BLWM on COOL speed. The electronic air cleaner terminal EAC-1 is energized with 115 VAC when the blower motor BLWM is operating.
      When the thermostat is satisfied, the R-to-G-and-Y/Y2 circuits are opened. The outdoor unit will stop, and the furnace blower motor BLWM will continue operating on the COOL speed for an additional 5, 30, or 90 seconds (depending on the cooling blower-OFF delay selection). The furnace CPU is factory set for a 90 second cooling blower-OFF delay. (See Fig. 36).
   b. **Two-Stage Thermostat and Two-Speed Cooling**
      The thermostat closes the R-to-G-and-Y1 circuits for low-cooling or closes the R-to-G-and-Y1-and-Y/Y2 circuits for high-cooling. The R-to-Y1 circuit starts the outdoor unit on low-cooling speed, and the R-to-G-and-Y1 circuit starts the furnace blower motor BLWM at low-cooling airflow. The R-to-Y1-and-YY/2 circuits start the outdoor unit on high-cooling speed, and the R-to-G-and-Y/Y2 circuits start the furnace blower motor BLWM at high-cooling airflow. Terminal EAC-1 is energized with as long as the blower motor BLWM is ON.
      When the thermostat is satisfied, the R-to-G-and-Y1 or R-to-G-and-Y1-and-Y2 circuits are opened. The outdoor unit stops, and the furnace blower BLWM and electronic air cleaner terminal EAC-1 will remain energized for an additional 90-seconds.
3. **Continuous Fan Mode**
   When the R-to-G circuit is closed by the thermostat, the blower motor BLWM will operate at the continuous-blower speed selected. Terminal EAC-1 is energized as long as the blower motor BLWM is ON. During a call for heat, the blower BLWM will stop during igniter warm-up (17 sec), ignition (7 sec), and blower-ON delay (25 sec), allowing the furnace heat exchangers to heat up more quickly, then restarts at the end of the blower-ON delay period at HEAT speed.
   In heating, the furnace control CPU will hold the blower motor BLWM at HEAT speed during the selected blower-OFF delay period before reverting to continuous-blower speed. When the

thermostat “calls for low-cooling”, the blower motor BLWM will switch to operate at low-cool speed. When the thermostat is satisfied, the blower motor BLWM will operate at low-cooling speed for the cooling off delay setting time before reverting back to continuous-blower speed.
When the thermostat “calls for high-cooling”, the blower motor BLWM will operate at COOL speed. When the thermostat is satisfied, the blower motor BLWM will operate at high-cooling speed for the cooling off delay setting time before reverting back to continuous-blower speed. When the R-to-G circuit is opened, the blower motor BLWM will continue operating for an additional 5 sec, if no other function requires blower motor BLWM operation.

4. **Heat pump**
When installed with a heat pump, the furnace control automatically changes the timing sequence to avoid long blower off times during demand defrost cycles. Whenever W is energized along with Y1 or Y/Y2, the furnace control CPU will transition to or bring on the blower motor BLWM at cooling airflow or heat airflow whichever is lowest. The blower motor BLWM will remain on until the main burners ignite then shut OFF and remain OFF for 25 seconds before coming back on at heating airflow. When the W input signal disappears, the furnace control begins a normal inducer post-purge period while changing the blower airflow. If Y/Y2 input is still energized the furnace control CPU will transition the blower motor BLWM airflow to cooling airflow. If Y/Y2 input signal disappears and the Y1 input is still energized the furnace control CPU will transition the blower motor BLWM to low-cooling airflow. If both the Y1 and Y/Y2 signals disappear at the same time, the blower motor BLWM will remain on at heat airflow for the selected blower-OFF delay period. If the R-to-W-and-Y1 signals disappear, leaving the G signal, the furnace control CPU will transition the blower motor BLWM to CONTINUOUS FAN speed after the selected heating blower-OFF delay period.

Wiring Diagrams

Refer to Fig. 36 for wiring diagram.

Troubleshooting

Refer to the service labels, see Fig. 35, wiring diagram, Fig. 36. The Troubleshooting Guide, see Fig. 40, can be a useful tool in isolating furnace operation problems. Beginning with the word “Start,” answer each question and follow the appropriate arrow to the next item. The Guide will help to identify the problem or failed component. After replacing any component, verify correct operation sequence.

TROUBLESHOOTING

Only the MAJOR flash code is seen through the sight glass on door.

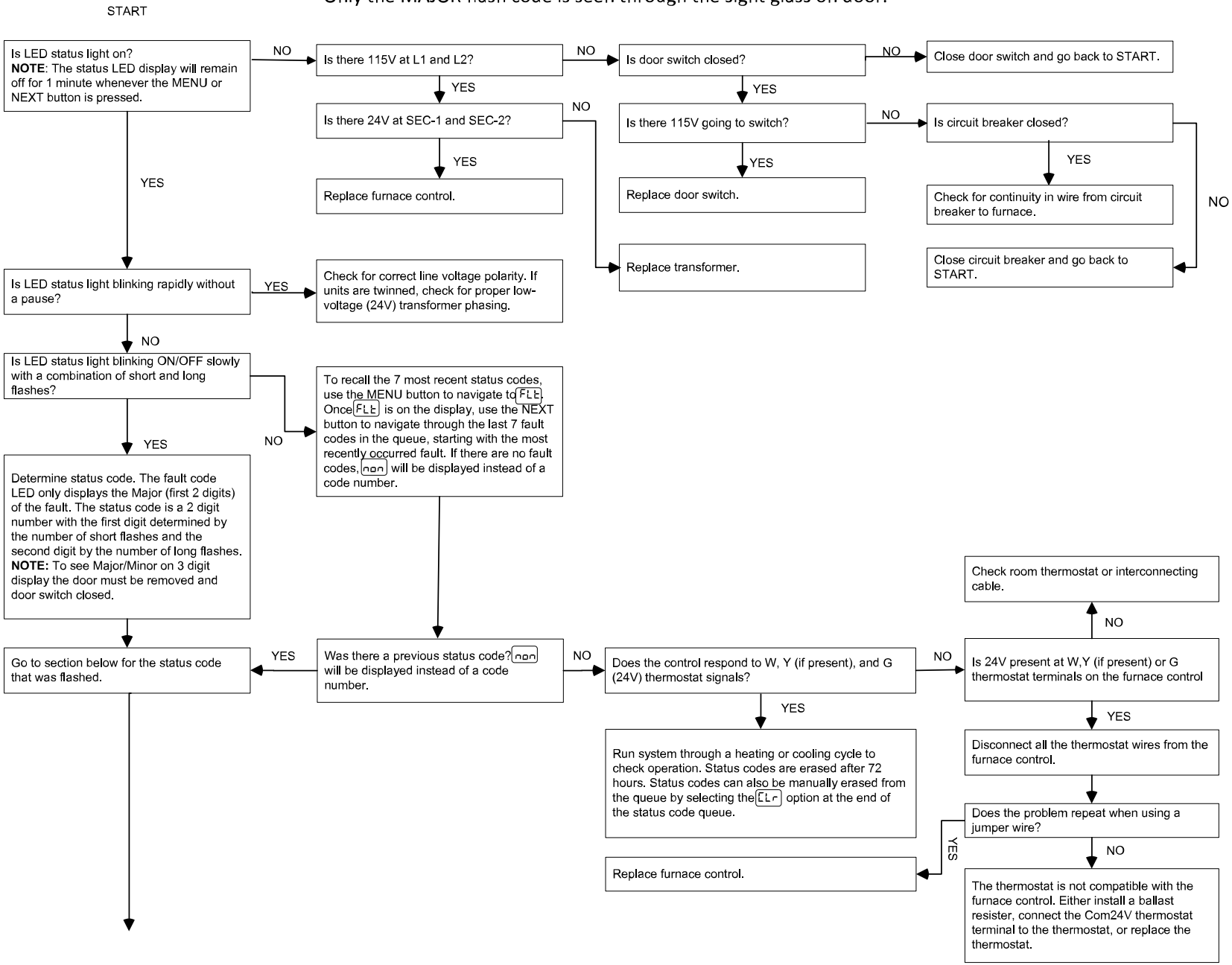

A221103

Fig. 40 – Troubleshooting Guide

Only the MAJOR flash code is seen through the sight glass on door.

10.1 L1 POLARITY FAULT
Rapid flash LED

12.1 "W" ON at power up – Normal operation. Blower runs for 90 seconds, if unit is powered up during a call for heat (R-W closed) or when (R-W opens) during the blower on-delay period.

13.1 LIMIT CIRCUIT LOCKOUT – Lockout occurs if the limit is open. Control will auto-reset after 3 hours. Check for:
– Dirty filter or restricted duct system
– Blower motor not functioning
– Defective switch or connections

14.1 IGNITION LOCKOUT – System failed to ignite gas and prove flame in 4 attempts. Control will auto-reset after 3 hours.
14.2 FLAME LOST – 3 times after 70s of heating
14.3 LOCKOUT – 7 loss of flame events, or three 34.4 faults, during a heat request.
14.4 LOCKOUT – 7 loss of pressure events during a heat request
– See status code 34 for more details

21.1 24VAC sensed on gas valve when shouldn't be. – Turn off power and wait 5 minutes to retry. Check for:
- Stuck closed gas valve relay on control.
- Miswire or short on gas valve wire.

22.1 FALSE FLAME – Flame is proved while gas valve is de-energized. Inducer will run until faut is cleared. Check for:
- Stuck open or leaky gas valve.

23.3 OVER PRESSURE - Pressure detected over 0.15" (~ 0.65Vdc signal to gnd, 0" = ~0.500Vdc) Check for:
- Proper vent sizing
- Obstruction in pressure tubing
- Defective transducer
- Defective transducer wiring
- Excessive wind

24.1 FUSE FAULT
Check for:
- Short circuit in secondary voltage (24-V) wiring including thermostat leads. Disconnect thermostat leads to isolate short circuit.

31.4 LOSS OF PRESSURE – Before blower comes on.
31.5 LOSS OF PRESSURE – After blower comes on.
Check for:
- Proper vent sizing
- Low inducer voltage (115V).
- Inadequate combustion air supply
- Disconnected or obstructed pressure tubing
- Defective inducer motor
- Defective transducer
- Excessive wind
- Restricted vent system

42.1 NO RPM FEEDBACK at start-up or before ignition proved.
42.2 NO RPM FEEDBACK after ignition proved.
42.3 EXCEEDING INDUCER RPM limit (model specific).
INDUCER MOTOR FAULT the RPM pulses are not detected within 20 seconds after a heat request, the inducer is outside of its valid range of operation, or the inducer RPM signal was lost for 5 seconds during operation, inducer exceeds model specific RPM limit.
Check for:
- Proper vent sizing
- Restricted combustion air supply
- Failed inducer motor
- Improper or loose motor wiring or bad connection
- Frozen or blocked drain

45.1 CONTROL FAILURE – flame circuit fault, memory mismatch or sequence error.
45.2 CONTROL FAILURE – gas valve relay will not close.
45.3 CONTROL FAILURE – EEPROM memory issue.

For code 45, cycle power, if code 45 repeats, replace control.

46.1 MOMENTARY LOSS of power – Heating operation will stop and will restart once the power fluctuation is resolved.

A221104A

Fig. 41 – Troubleshooting Guide (cont.)

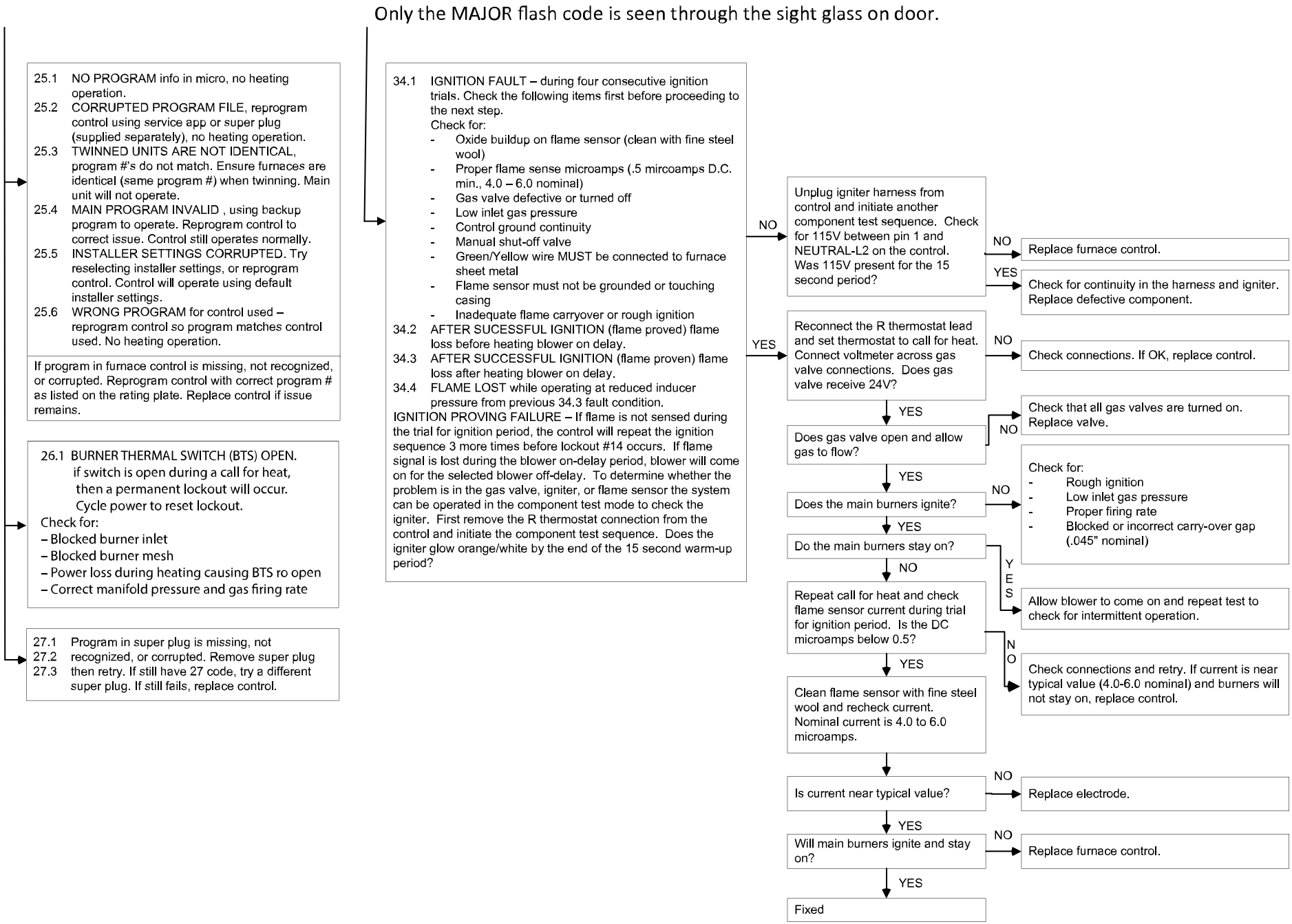

Fig. 42 – Troubleshooting Guide (cont.)

GAS FURNACE CHECKLIST

Installation Date: _____

Equipment		
	Model	Serial #
Furnace		
Thermostat		
Humidifier		
Indoor Coil		
Outdoor Unit		

Furnace Location_____ Installed altitude _____

Furnace Orientation: ____Upflow ___Downflow ___Horizontal Right ___Horizontal Left

Gas Adjustment

LOCAL GAS HEAT CONTENT_____(btu/cu. ft.) SPECIFIC GRAVITY_____/cu. ft.
(contact your local gas utility-not required for propane)

INLET SUPPLY PRESSURE** _____ in. W.C. ORIFICE #_____
MANIFOLD PRESSURE: High fire_____ in. W.C. Low fire_____ in. W.C.
**Supply pressure should be checked with furnace and all other gas appliances running

FIRING RATE: (CLOCKED METER FOR NAT. GAS – assure only furnace is running)
Firing rate = heat content (btu/cu. ft.) X size of the dial (cu. ft/rev) X # of rev. per 60 sec (rev/sec) X 3600 (sec/hr)
Example- (1050 btu/cu. ft.) X (0.5 cu. f ./rev.) X (2 revs./60sec) X (3600 sec/hr)= 63,000 btu/hr
OR use the "Gas Rate" chart in the startup and adjustment section of the installation manual

HIGH HEAT_____ btu/hr LOW HEAT _____ btu/hr

LEAVING AIR TEMPERATURE _____(F) high _____ (F) low

RETURN AIR TEMPERATURE _____(F) high _____ (F) low

TEMPERATURE RISE _____(F) high _____ (F) low

Temperature rise is equal to the supply air temp minus the return air temp @ steady state operation.
The supply temperature should be measured away from the line of sight of the Heat Exchanger

+90 % VENTING SYSTEM

Pipe Dia_____ # of Elbows_____ Total Length _____ft.

Termination Type: (circle one) Concentric 2 pipe (std)

Termination Locat on: (circle one) Roof Sidewall

MID-EFFICIENCY VENTING SYSTEM

METAL: (circle one) B vent Chimney Liner

Vent Dia_____Total Ht._____ft. Vent Conn. Dia_____ Conn. Length _____ft. # of Elbows_____

Connector Type: Single Wall B Vent Connector Rise Above Furnace _____ft.

A220915

Fig. 43 – Gas Furnace Checklist

PARTS REPLACEMENT INFORMATION GUIDE

Casing Group

Outer door
Blower door
Top filler plate
Bottom filler plate
Bottom enclosure

Electrical Group

Control bracket
Junction box
Limit switch(es)
Circuit board
Super plug
Door switch
Transformer
Wiring harness 115v
Wiring harness 24v

Blower Group

Blower housing
Blower cutoff
Blower motor
Blower wheel
Grommet
Power choke (where used)
Auxiliary limit switches

Gas Control Group

Burner assembly
Orifice
Flame sensor
Hot surface igniter
Gas valve
Manual reset limit switches
Burner support assembly

Heat Exchanger Group

Heat exchanger cell
Cell panel

Inducer Group

Housing assembly
Transducer
Inducer motor
Inducer wheel

TO OBTAIN INFORMATION ON PARTS: Consult your installing dealer or a licensed Heating and Air Conditioning company of your choice:

INTERNATIONAL COMFORT PRODUCTS
a division of Carrier Corporation
LEWISBURG, TN 37091 U.S.A.

Have available the model number, series number, and serial number located on the unit rating plate to ensure correct replacement part.

MODEL NOMENCLATURE

MODEL	HEATING SIZE	WIDTH	COOLING SIZE	MAJOR SERIES	MINOR SERIES
N80MSU	060	17	16	A	1

⚠ WARNING

FIRE, EXPLOSION, ELECTRICAL SHOCK AND CARBON MONOXIDE POISONING HAZARD

Failure to follow this warning could result in dangerous operation, personal injury, death or property damage.
Improper installation, adjustment, alteration, service, or maintenance can cause personal injury, property damage, or death. Consult a qualified installer, service agency, or your local gas supplier for information or assistance. The qualified installer or service agency must use only factory-authorized replacement parts, kits, or accessories when modifying this product.

© 2025 Carrier. All rights reserved.
Edition Date: 11/25
Catalog No: N80MSU-03SI
A Carrier CompanyA Proud Member of the Carrier Family
Replaces: **N80MSU-02SI**
Manufacturer reserves the right to change, at any time, specifications and designs without notice and without obligations.